ADDENDUM 2 (PENDING DSA APPROVAL)

HAMMEL, GREEN AND ABRAHAMSON, INC.,
ARCHITECTS & ENGINEERS
1918 Main Street, Third Floor
Santa Monica, CA 90405

PROJECT: **Santa Ana College**
Science Center

DATE: 9/1/2017

OWNER: **RSCCD**
2323 N. Broadway, Suite 112
Santa Ana, CA 92706

DSA File No.: 30-C2
DSA Applications No.: 04-115788
HGA Commission No.: 3584-001-00

CONSTRUCTION MANAGER:

BERNARDS
3633 E. Inland Empire Blvd., Suite 800
Ontario, CA 91764

The additions, revisions, omissions, corrections and clarifications contained herein shall be made to drawings and specifications for the project and shall be included in scope of work and bids to be submitted. Additionally, reference documents, such as as-built documentation of existing buildings, are provided to further quantify the scope of work. References made below to specifications, drawings, and other documents shall be used as a general guide only. Bidders and Contractors shall determine for themselves the work affected by Addendum items.

RFP

None

SPECIFICATIONS (All revisions to the specification are noted in underline or ~~strikeout~~ with the corresponding addendum reference "ADD-2")

Item AD-2-1: Revise 000110 TABLE OF CONTENTS
Item AD-2-2: Revise SECTION 012300
Item AD-2-3: Add SECTION 014339
Item AD-2-4: Revise SECTION 015723
Item AD-2-5: Revise SECTION 016210
Item AD-2-6: Revise SECTION 018113.13
Item AD-2-7: Revise SECTION 024100
Item AD-2-8: Revise SECTION 024116
Item AD-2-9: Revise SECTION 031500
Item AD-2-10: Revise SECTION 033000
Item AD-2-11: Revise SECTION 042000
Item AD-2-12: Revise SECTION 055000

Item AD-2-13: Revise SECTION 074244
Item AD-2-14: Delete SECTION 075216
Item AD-2-15: Revise SECTION 075500
Item AD-2-16: Revise SECTION 087100
Item AD-2-17: Revise SECTION 087113
Item AD-2-18: Delete SECTION 096800
Item AD-2-19: Delete SECTION 096813
Item AD-2-20: Add SECTION 096816
Item AD-2-21: Revise SECTION 102813
Item AD-2-22: Revise SECTION 105626.13
Item AD-2-23: Delete SECTION 115213
Item AD-2-24: Revise SECTION 115310
Item AD-2-25: Revise SECTION 115350
Item AD-2-26: Add SECTION 123110
Item AD-2-27: Revise SECTION 142423
Item AD-2-28: Revise SECTION 263210
Item AD-2-29: Revise SECTION 263215
Item AD-2-30: Revise SECTION 263353
Item AD-2-31: Revise SECTION 272000
Item AD-2-32: Add SECTION 272126
Item AD-2-33: Revise SECTION 274116
Item AD-2-34: Revise SECTION 275313
Item AD-2-35: Revise SECTION 281300
Item AD-2-36: Revise SECTION 312000
Item AD-2-37: Revise SECTION 316329
Item AD-2-38: Revise SECTION 321216
Item AD-2-39: Revise SECTION 321313
Item AD-2-40: Add SECTION 329320
Item AD-2-41: Delete SECTION 334923

DRAWINGS

CIVIL:
Item AD-2-42: Revise C0.01
- Added new sheet C1.51 to sheet index.
- Updated paving hatches per paving plan

Item AD-2-43: Revise C1.10
- Added cut and cap information for existing utility demolition.
- Added demolition notes to the southeast corner of site for new ADA parking location.

Item AD-2-44: Revise C1.20
- Revised site sandbag barrier to include area of new ADA parking location.
- Remove sandbag barrier at existing CMU wall in the southwest corner.

Item AD-2-45: Revise C1.32
- Revised grading per new site plan

Item AD-2-46: Revise C1.33
- Revised grading per new site plan

Item AD-2-47: Revise C1.34
- Revised grading per new site plan

Item AD-2-48: Revise C1.35
- Revised grading per new site plan

Item AD-2-49: Revise C1.40

- Revised drainage per new site plan.
- Added more information to construction notes for drain type.
- Remove CMP infiltration system and CDS unit.

Item AD-2-50: Revise C1.50

- Revised fire water alignment per new site plan.
- Added a PIV.

Item AD-2-51: Add C1.51

- Provided utility enlargement for clarity.
- Added notes to clarify irrigation components.

Item AD-2-52: Revise C1.60

- Revised paving plan per new site plan.
- Added control joint, isolation joint, and expansion joint locations and construction notes.

Item AD-2-53: Revise C1.70

- Revised fire access plan per new site plan.
- New fire lane north of the proposed building.

Item AD-2-54: Revise C5.00

- Added expansion joint detail to detail 1.
- Revised details 3 to coordinate with landscape plans.
- Revised base to Class 2 aggregate base for detail 4, 6, 7, 9.

Item AD-2-55: Revise C5.02

- Revised detail 6, 8 to be angle parking striping per new site plan.
- Replaced detail 4 with post indicator valve detail.
- The previous detail of the CMP infiltration system is no longer applicable.

LANDSCAPE:

Item AD-2-56: Revise L1.01

- Updated site background
- Adjusted dimensions, callouts
- Construction Legend updated:
  - #1 added score & expansion joints note, added civil details for reference
  - #2 added pattern
  - # 3 deleted concrete paver – not used; replaced with concrete paving for temporary use
  - #4 deleted concrete paver – not used
  - #5 added score & expansion joints note, added civil details for reference
  - #6 deleted 30” wide banding – not used
  - # 7 deleted 18” wide concrete seat wall – not used
  - # 8 deleted 24” wide concrete seat wall – not used
  - # 9 deleted 5’x5’ concrete bench with IPE wood top– not used
  - # 10 deleted 2.5’x10’ concrete bench with IPE wood top– not used

Item AD-2-57: Revise L1.02

- Deleted details # 4, 6, 7, 9

Item AD-2-58: Revise L2.00

- Updated site background
- Adjusted irrigation design layout to match new planter shape
- Added irrigation in the area adjacent to the library per Owner comments
- Adjusted GPM calculation and valve numbers for affected areas
- Added enlarged plant at P.O.C.

Item AD-2-59: Revise L2.01

- Added rotor heads under Sprinkler Head Legend
- Added irrigation note # 5 – subsurface drip irrigation per Owner comments

Item AD-2-60: Revise L2.03

- Added pop-up rotor detail #7

Item AD-2-61: Revise L2.04

- Replaced detail # 1 with Emitter Assembly @ Rock Mulch
- Revised detail # 2 dripline layout
- Replaced detail # 3 with Sub-surface Dripline
- Revised detail # 4 Flush Valve per Owner comments
- Adjusted system calculation to comply with new irrigation design layout
- Adjusted watering schedule to comply with new irrigation design layout

Item AD-2-62: Revise L3.01

- Updated site background
- Adjusted planting design to match new planter shape
- Added areas for turfgrass
- Added areas for wildflower seed mix
- Added shovel cut edging
- Relocated 3 soil tests callout to new locations
- Added utility coordination note to 48" box oak trees
- Planting Legend
  - Adjusted Arbutus unedo quantity and detail info
  - Deleted Parkinsonia desert museum tree – not used
  - Deleted Prosopis glandulosa tree – not used
  - Deleted Bulbine frutescens shrub – not used
  - Added Lobelia laxiflora
  - Added hydroseed mix
  - Added wildflower seed mix
  - Adjusted ground cover quantities

Item AD-2-63: Revise L3.02

- Deleted detail # 1 – not used

ARCHITECTURAL:

Item AD-2-64: Revise A013

- Path of Travel revised per updated site plan.
- Project scope of work modified per updated site plan.

Item AD-2-65: Revise A014

- Addition stalls are demoed in order to create new ADA parking.
- Graphics updated: two parking stalls are existing to remain.
- Graphics updated: sidewalk is existing to remain.
- Note added.

Item AD-2-66: Revise A061

- Site work north of the building is revised.
- Notes added
- Added paving area
- Identified Phase 1 and Phase 2 limit of work
- Limit of work line updated
- Parking count revised

Item AD-2-67: Revise A062

- Detail 1: Added material ID tag <SSCASE-1> for stainless steel workbench and shelving.

- Detail 1: Note 1 revised and Notes 2 and 3 added.

Item AD-2-68: Revise A066
- Detail 1: Extent of demo and extent of new masonry wall updated; Temporary Construction Barrier indicated
- Detail 2: Extent of demo and extent of new masonry wall updated
- Detail 4: Note updated.
- Detail 5: Accessible drop off updated per new site plan
- Detail 6: Installation detail updated per manufacturer.

Item AD-2-69: Revise A082
- Updated door schedule to remove card readers per college. This also affected the hardware groups.

Item AD-2-70: Revise A203
- Wall at Instrument Room shortened to provide 5'-0" opening.
- Fire Extinguisher relocated to location next to door 320-1A.
- Tag added at Fire Extinguisher inside Chemistry Lab SC316 and SC315.

Item AD-2-71: Revise A211
- Added floor boxes.
- Added Notes 4 and 5.

Item AD-2-72: Revise A301
- Clarified underside of ceiling to have 1 hour rated shaft bottom.

Item AD-2-73: Revise A302
- Clarified underside of ceiling to have 1 hour rated shaft bottom.

Item AD-2-74: Revise A424
- Detail 1: Framing at roof updated
- Detail 2: Added detail reference at aluminum awning.

Item AD-2-75: Revise A425
- Detail 1: Clarified detail at drift joint and coordinated structural framing with structural drawings.

Item AD-2-76: Revise A429
- Detail 2: Clarified detail at drift joint and coordinated structural framing with structural drawings.

Item AD-2-77: Revise A430
- Detail 2: Clarified attachment at stud wall to concrete curb.
- Detail 2: Added note about waterproofing.

Item AD-2-78: Revise A435
- Detail 4: Framing at roof updated; general note added
- Detail 5: Framing at roof updated; general note added
- Detail 6: Framing at roof updated; general note added

Item AD-2-79: Revise A436
- Detail 4: Clarified detail at drift joint and coordinated structural framing with structural drawings.
- Detail 4: Added note added about waterproofing

Item AD-2-80: Revise A440
- Detail 3: Clarified detail at drift joint and coordinated structural framing with structural drawings.

Item AD-2-81: Revise A494
- Detail 5: Added detail

Item AD-2-82: Revise A520
- General notes added.

Item AD-2-83: Revise A661
- Updated Sheet name
- Detail 7: Detail revised to be 1-hr rated duct enclosure
- Detail 10: Added detail

Item AD-2-84: Revise A670
- Detail 3: End condition updated; detail name updated
- Detail 7: End condition updated; detail name updated

- Detail 13: Framing at bulkhead updated.
- Detail 16: Note added.
- Detail 17: Added diagonal main runner.

Item AD-2-85: Revise A682

- Detail 1 and 8: Electrical and data outlets shown
- Detail 1 and 8: Added note to provide cord management.
- Detail 1 and 8: Casework approach

SIGNAGE:

Item AD-2-86: Revise GS.01

- The Site/Sign Location Plan has been revised, per the Addenda Package layout.
- Sign types S4 & S11 are no longer needed, and have been deleted.
- An additional S3A (Fire Lane Access Sign) was added to the driveway entrance on the East side of the building, and the remaining S3 (Fire Lane) and S3A signs have shifted to match the new site layout.

Item AD-2-87: Revise GS-12

- ST S4 (Enter / Do Not Enter) has been labeled as "Not Used" on the detail sheet.

Item AD-2-88: Revise GS-13

- ST S11 (Project Directory Map) has been labeled as "Not Used" on the detail sheet.

LAB FURNISHING

Item AD-2-89: Revise LF1.00

- Added note to refer to architectural for final locations and details regarding the paper towel and soap dispensers.

Item AD-2-90: Revise LF1.01

- Added standard (non-accessible) 4' fume hood to Chemical Fume Hoods Schedule.

Item AD-2-91: Revise LF1.02

- Added tall cabinet with dividers for microscopes.
- Revised quantity of shelves in TAV tall cabinet.
- Clarified quantity of shelves in TCS43 tall corrosives storage cabinet and TSS43 tall solvent storage cabinet.

Item AD-2-92: Revise LF2.01A

- Added note to keynote 9 to indicate the cone for the snorkel is to be metal.
- Added verbiage to note in shadow box on side of page to indicate requirement is typical of all floors.

Item AD-2-93: Revise LF2.02A

- In Organismal Biology Lab SC226 and Anatomy Lab SC217 deleted note "CONFIRM FLOOR BOX REQUIREMENTS".
- Revised note in Anatomy & Physiology Prep & Storage SC215 regarding the shelving in the TAV48 storage cabinets.
- Added verbiage regarding zoology/ornithology cabinets.
- Added leader arrow to indicate both downdraft dissection tables are included.

Item AD-2-94 Revise LF2.02B

- In General Biology Lab SC218 and Microbiology SC216 deleted note "CONFIRM FLOOR BOX REQUIREMENTS".
- Added note to indicate map storage file unit does not get a benchtop.
- Added LG and LV callouts to the island bench at column line 4.

Item AD-2-95: Revise LF2.02C

- In Molecular Biology Lab SC212 and Physiology Lab SC213 deleted note "CONFIRM FLOOR BOX REQUIREMENTS".
- In Physiology Lab SC213 revised PTD and SD callouts to match architectural plans and added keynote to pipe drop at west wall.

Item AD-2-96: Revise LF2.03A

- In Chemistry Lab SC315 and Chemistry Lab SC326 deleted notes "CONFIRM FLOOR BOX REQUIREMENTS" and

"(284) REMOVABLE STUDENT DRAWERS AT ISLANDS."

Item AD-2-97: Revise LF2.03B

- In Chemistry Lab SC316 and Organic Chemistry Lab SC320 deleted note "CONFIRM FLOOR BOX REQUIREMENTS".
- In Chemistry Lab SC316 deleted note "(284) REMOVABLE STUDENT DRAWERS AT ISLANDS."
- In Centralized Prep & Storage SC322 added keynote to adjustable wall shelf.

Item AD-2-98: Revise LF2.03C

- In Chemistry Lab SC309 and Physics Lab SC312 deleted note "CONFIRM FLOOR BOX REQUIREMENTS".
- In Chemistry Lab SC309 deleted note "(284) REMOVABLE STUDENT DRAWERS AT ISLANDS," and revised L36** 8-drawer base cabinets to X36** 6-drawer base cabinets, and added PTD and SD to pipe drop at east wall to match architectural.
- In Physics Prep and Storage SC314 added keynote 5 to heavy duty wall shelves and added note to keynote 9 to indicate the cone for the snorkel is to be metal.

Item AD-2-99: Revise LF3.01

- In elevations 1, 5, 7 added padlock hasps to all drawers.

Item AD-2-100: Revise LF4.00

- In detail 8 revised notes to indicate lowest point of canopy hood assembly to be a minimum of 80" AFF.

Item AD-2-101: Revise LF4.01

- In detail 9 revised name of detail.

Item AD-2-102: Revise LF4.02

- In detail 9 added note regarding benchtop supports.

Item AD-2-103: Revise LF4.05

- In details 5 and 6 revised dimension from back of sink cut out to centerline of faucet.
- Added fixture spacing layout for sink with fittings at the side to detail 6.

Item AD-2-104: Revise LF4.06

- Revised references to structural detail for wall backing to match correct sheet and detail number.

Item AD-2-105: Revise LF5.00

- In detail 1 revised detail name to correspond to designation on floor plan.
- In details 2 and 6 revised gooseneck to 8".

LAB ELECTRICAL

Item AD-2-106: Revise LE2.01A

- In Engineering Prep & Storage SC132 revised two receptacles to be on dedicated circuits.
- Revised keynote #4 to refer to AV documents in lieu of architectural.

Item AD-2-107: Revise LE2.01B

- In Geology/Physical Science Lab & Lecture SC122 revised two receptacles to be on dedicated circuits.
- Revised keynote #3 to indicate wall mounted projector and to refer to AV documents in lieu of architectural.

Item AD-2-108: Revise LE2.02A

- Revised keynote #4 to indicate wall mounted projector and to refer to AV documents in lieu of architectural.

Item AD-2-109: Revise LE2.02B

- Revised keynote #3 to indicate wall mounted projector and to refer to AV documents in lieu of architectural.

Item AD-2-110: Revise LE2.02C

- Revised keynote #5 to indicate wall mounted projector and to refer to AV documents in lieu of architectural.

Item AD-2-111: Revise LE2.03A

- Revised keynote #3 to indicate wall mounted projector and to refer to AV documents in lieu of architectural.

Item AD-2-112: Revise LE2.03B

- Revised keynote #3 to indicate wall mounted projector and to refer to AV documents in lieu of architectural.
- In Centralized Prep & Storage SC322 revised receptacle for refrigerator to be on standby power.

Item AD-2-113: Revise LE2.03C

- Revised keynote #4 to indicate wall mounted projector and to refer to AV documents in lieu of architectural.

- In Physics Lab SC312 revised two receptacles to be on dedicated circuits.

Item AD-2-114: Revise LE3.01

- Revised Panel Schedules to correspond to revisions to receptacles in plans.

Item AD-2-115: Revise LE3.02

- Revised Panel Schedules to correspond to revisions to receptacles in plans.

STRUCTURAL

Item AD-2-116: Revise S0.11

- Detail 1C and 1E clarified.

Item AD-2-117: Revise S2.01

- A few pile cap designation clarified.
- Vapor Barrier information clarified.

Item AD-2-118: Revise S2.02

- References of details 8 and 9/S8.22 added.

Item AD-2-119: Revise S2.04

- Roof shaft opening added to coordinate with the architectural drawings.
- A few beams were removed as the roof screen around the equipment was removed.

Item AD-2-120: Revise S3.02

- Pile cap designation corrected.

Item AD-2-121: Revise S8.11

- Detail 4 has been updated.

Item AD-2-122: Revise S8.12

- Details 1, 2 and 3 have been updated.

Item AD-2-123: Revise S8.22

- Detail numbers and titles were missing in the approved sheet. Detail titles and numbers have been shown.
- Details 8 and 9 were added to clarify framing.

ELECTRICAL

Item AD-2-124: Revise E0.6

- Details, Revise Details 8 and 9 as indicated.

Item AD-2-125: Revise E0.7

- Level 01 Panel Schedules, Revise Panel 1LHA as indicated.

Item AD-2-126: Revise E0.7A

- Level 01 Panel Schedules, Revise Panel E1LHA as indicated.

Item AD-2-127: Revise E1.0

- SITE ELECTRICAL DEMOLITION PLAN, revise as indicated.

Item AD-2-128: Revise E1.1

- OVERALL SITE ELECTRICAL PLAN, revise as indicated.

Item AD-2-129: Revise E1.2

- ENLARGED SITE ELECTRICAL PLAN, revise as indicated.

Item AD-2-130: Revise EF4.5

- OVERALL SITE FIRE ALARM PLAN, revise as indicated.

TELECOM

Item AD-2-131: Revise T1.4

- OVERALL SITE TELECOM PLAN, revise as indicated.

SECURITY

Item AD-2-132: Revise SE0.01

- Added blue light emergency strobe symbol and legend note

Item AD-2-133: Revise SE1.11

- Updated background and relocated emergency phones and cameras affected.
- Added detail callout for greenhouse card reader.

Item AD-2-134: Revise SE2.01

- Removed CR from doors SC126A, 130A, 106A, 104A, and 102A.
- Corrected detail call out for doors 307L and 109A.

Item AD-2-135: Revise SE2.02

- Removed CR from doors 224A, 210A, 206A, 204A, and 202A.

Item AD-2-136: Revise SE2.03

- Removed CR from doors 324A, 310A, 306A, 304A, and 302A.

Item AD-2-137: Revise SE2.04

- Added blue light emergency strobe locations.

Item AD-2-138: Revise SE3.01

- Added blue light emergency strobe single line, general notes, and workstation notes

Item AD-2-139: Revise SE5.01

- Updated device schedule to reflect changes

AUDIO VISUAL

Item AD-2-140: Revise AV001

- Mounting height of VD70 was added at 60” AFF

Item AD-2-141: Revise AV002

- Added in the DEVICE / BOX ID: DTP, PEC, PT

Item AD-2-142: Revise AV101

- Updated Detail 3 Room Numbers

Item AD-2-143: Revise AV401

- Added dimensions for projector mounting height

Item AD-2-144: Revise AV402

- Added dimensions for projector mounting height

Item AD-2-145: Revise AV501

- Updated Details 5, 7, & 8

Item AD-2-146: Revise AV601

- Updated equipment tags, output labels, additional cable connections

Item AD-2-147: Revise AV602

- Updated equipment tags, output labels, additional cable connections

Item AD-2-148: Revise AV603

- Updated equipment tags, output labels, additional cable connections

Item AD-2-149: Revise AV604

- Updated equipment tags, output labels, additional cable connections

Item AD-2-150: Revise AV651

- Reversed rack details

Item AD-2-151: Revise AV701

- Added addition structural mounting information

Item AD-2-152: Revise AV703

- Added addition structural mounting information for Detail 2

Item AD-2-153: Revise AV751

- Added additional panel label information

Item AD-2-154: Revise AV752

- Added Details 3 & 4

FIRE PROTECTION

Item AD-2-155: Revise FP-100

- Update underground routing, added PIV.

Item AD-2-156: Revise FP-201

- Updated Calculation information

Item AD-2-157: Revise FP-203

- Updated Calculation information

DRAWINGS – AS-BUILT

None

RESPONSES TO PRE-BID CLARIFICATION ("PBC")

None

ATTACHMENTS:

Item AD-2-1: 000110 TABLE OF CONTENTS (6 pages)
Item AD-2-2: SECTION 012300 (2 pages)
Item AD-2-3: SECTION 014339 (2 pages)
Item AD-2-4: SECTION 015723 (4 pages)
Item AD-2-5: SECTION 016210 (4 pages)
Item AD-2-6: SECTION 018113.13 (8 pages)
Item AD-2-7: SECTION 024100 (3 pages)
Item AD-2-8: SECTION 024116 (7 pages)
Item AD-2-9: SECTION 031500 (4 pages)
Item AD-2-10: SECTION 033000 (13 pages)
Item AD-2-11: SECTION 042000 (12 pages)
Item AD-2-12: SECTION 055000 (8 pages)
Item AD-2-13: SECTION 074244 (5 pages)
Item AD-2-15: SECTION 075500 (17 pages)
Item AD-2-16: SECTION 087100 (56 pages)
Item AD-2-17: SECTION 087113 (8 pages)
Item AD-2-20: SECTION 096816 (8 pages)
Item AD-2-21: SECTION 102813 (5 pages)
Item AD-2-22: SECTION 105626.13 (4 pages)
Item AD-2-24: SECTION 115310 (46 pages)
Item AD-2-25: SECTION 115350 (8 pages)
Item AD-2-26: SECTION 123110 (4 pages)
Item AD-2-27: SECTION 142423 (6 pages)
Item AD-2-28: SECTION 263210 (9 pages)

Item AD-2-29: SECTION 263215 (18 pages)
Item AD-2-30: SECTION 263353 (15 pages)
Item AD-2-31: SECTION 272000 (8 pages)
Item AD-2-32: SECTION 272126 (18 pages)
Item AD-2-33: SECTION 274116 (46 pages)
Item AD-2-34: SECTION 275313 (9 pages)
Item AD-2-35: SECTION 281300 (26 pages)
Item AD-2-36: SECTION 312000 (7 pages)
Item AD-2-37: SECTION 316329 (7 pages)
Item AD-2-38: SECTION 321216 (4 pages)
Item AD-2-39: SECTION 321313 (5 pages)
Item AD-2-40: SECTION 329320 (14 pages)
Item AD-2-42: C0.01 (1 sheet)
Item AD-2-43: C1.10 (1 sheet)
Item AD-2-44: C1.20 (1 sheet)
Item AD-2-45: C1.32 (1 sheet)
Item AD-2-46: C1.33 (1 sheet)
Item AD-2-47: C1.34 (1 sheet)
Item AD-2-48: C1.35 (1 sheet)
Item AD-2-49: C1.40 (1 sheet)
Item AD-2-50: C1.50 (1 sheet)
Item AD-2-51: C1.51 (1 sheet)
Item AD-2-52: C1.60 (1 sheet)
Item AD-2-53: C1.70 (1 sheet)
Item AD-2-54: C5.00 (1 sheet)
Item AD-2-55: C5.02 (1 sheet)
Item AD-2-56: L1.01 (1 sheet)
Item AD-2-57: L1.02 (1 sheet)
Item AD-2-58: L2.00 (1 sheet)
Item AD-2-59: L2.01 (1 sheet)
Item AD-2-60: L2.03 (1 sheet)
Item AD-2-61: L2.04 (1 sheet)
Item AD-2-62: L3.01 (1 sheet)
Item AD-2-63: L3.02 (1 sheet)
Item AD-2-64: A013 (1 sheet)
Item AD-2-65: A014 (1 sheet)
Item AD-2-66: A061 (1 sheet)
Item AD-2-67: A062 (1 sheet)
Item AD-2-68: A066 (1 sheet)
Item AD-2-69: A082 (1 sheet)
Item AD-2-70: A203 (1 sheet)
Item AD-2-71: A211 (1 sheet)
Item AD-2-72: A301 (1 sheet)
Item AD-2-73: A302 (1 sheet)
Item AD-2-74: A424 (1 sheet)
Item AD-2-75: A425 (1 sheet)
Item AD-2-76: A429 (1 sheet)
Item AD-2-77: A430 (1 sheet)
Item AD-2-78: A435 (1 sheet)
Item AD-2-79: A436 (1 sheet)
Item AD-2-80: A440 (1 sheet)

Item AD-2-81: A494 (1 sheet)
Item AD-2-82: A520 (1 sheet)
Item AD-2-83: A661 (1 sheet)
Item AD-2-84: A670 (1 sheet)
Item AD-2-85: A682 (1 sheet)
Item AD-2-86: GS.01 (1 sheet)
Item AD-2-87: GS.12 (1 sheet)
Item AD-2-88: GS.13 (1 sheet)
Item AD-2-89: LF1.00 (1 sheet)
Item AD-2-90: LF1.01 (1 sheet)
Item AD-2-91: LF1.02 (1 sheet)
Item AD-2-92: LF2.01A (1 sheet)
Item AD-2-93: LF2.02A (1 sheet)
Item AD-2-94: LF2.02B (1 sheet)
Item AD-2-95: LF2.02C (1 sheet)
Item AD-2-96: LF2.03A (1 sheet)
Item AD-2-97: LF2.03B (1 sheet)
Item AD-2-98: LF2.03C (1 sheet)
Item AD-2-99: LF3.01 (1 sheet)
Item AD-2-100: LF4.00 (1 sheet)
Item AD-2-101: LF4.01 (1 sheet)
Item AD-2-102: LF4.02 (1 sheet)
Item AD-2-103: LF4.05 (1 sheet)
Item AD-2-104: LF4.06 (1 sheet)
Item AD-2-105: LF5.00 (1 sheet)
Item AD-2-106: LE2.01A (1 sheet)
Item AD-2-107: LE2.01B (1 sheet)
Item AD-2-108: LE2.02A (1 sheet)
Item AD-2-109: LE2.02B (1 sheet)
Item AD-2-110: LE2.02C (1 sheet)
Item AD-2-111: LE2.03A (1 sheet)
Item AD-2-112: LE2.03B (1 sheet)
Item AD-2-113: LE2.03C (1 sheet)
Item AD-2-114: LE3.01 (1 sheet)
Item AD-2-115: LE3.02 (1 sheet)
Item AD-2-116: S0.11 (1 sheet)
Item AD-2-117: S2.01 (1 sheet)
Item AD-2-118: S2.02 (1 sheet)
Item AD-2-119: S2.04 (1 sheet)
Item AD-2-120: S3.02 (1 sheet)
Item AD-2-121: S8.11 (1 sheet)
Item AD-2-122: S8.12 (1 sheet)
Item AD-2-123: S8.22 (1 sheet)
Item AD-2-124: E0.6 (1 sheet)
Item AD-2-125: E0.7 (1 sheet)
Item AD-2-126: E0.7A (1 sheet)
Item AD-2-127: E1.0 (1 sheet)
Item AD-2-128: E1.1 (1 sheet)
Item AD-2-129: E1.2 (1 sheet)
Item AD-2-130: EF4.5 (1 sheet)
Item AD-2-131: T1.4 (1 sheet)

Item AD-2-132: SE0.01 (1 sheet)
Item AD-2-133: SE1.11 (1 sheet)
Item AD-2-134: SE2.01 (1 sheet)
Item AD-2-135: SE2.02 (1 sheet)
Item AD-2-136: SE2.03 (1 sheet)
Item AD-2-137: SE2.04 (1 sheet)
Item AD-2-138: SE3.01 (1 sheet)
Item AD-2-139: SE5.01 (1 sheet)
Item AD-2-140: AV001 (1 sheet)
Item AD-2-141: AV002 (1 sheet)
Item AD-2-142: AV101 (1 sheet)
Item AD-2-143: AV401 (1 sheet)
Item AD-2-144: AV402 (1 sheet)
Item AD-2-145: AV501 (1 sheet)
Item AD-2-146: AV601 (1 sheet)
Item AD-2-147: AV602 (1 sheet)
Item AD-2-148: AV603 (1 sheet)
Item AD-2-149: AV604 (1 sheet)
Item AD-2-150: AV651 (1 sheet)
Item AD-2-151: AV701 (1 sheet)
Item AD-2-152: AV703 (1 sheet)
Item AD-2-153: AV751 (1 sheet)
Item AD-2-154: AV752 (1 sheet)
Item AD-2-155: FP-100 (1 sheet)
Item AD-2-156: FP-201 (1 sheet)
Item AD-2-157: FP-203 (1 sheet)

END OF ADDENDUM 2

000110
TABLE OF CONTENTS

Revised, Addendum #2, 09/01/2017

VOLUME ONE

DIVISION 00 PROCUREMENT AND CONTRACTING REQUIREMENTS

000105.12 Certifications Pages - CA
000110 Table of Contents

DIVISION 01 GENERAL REQUIREMENTS

011100 Summary of Work
011216 Phasing of the Work
011419 Use of Site
012100 Allowances
012300 Alternates
012613 Request for Information Procedures
012973 Schedule of Values Procedures
012976 Progress Payment Procedures
013113 Project Coordination
013119 Project Meetings
013213 Construction Schedule
013229 Project Forms
013300 Submittal Procedures
013310 Submittal Transmittal
013501 Owner's Controlled Insurance Program (OCIP)
013502 Community and Student Workforce Project Agreement (CSWPA)
013529 Health, Safety, and Environmental Requirements
014100 CEQA EIR Mitigation Measures
014339 Mockups ***ADD-2***
014523 Testing and Inspection
014524 Environmental Import/Export Materials Testing
014533.10 Structural Testing and Special Inspections
015000 Construction Facilities and Temporary Controls
015723 Temporary Storm Water Pollution Control
016210 Product Options and Substitution Requirements
016211 Substitution Request Form
016400 Owner Furnished Products
017123 Field Engineering
017325 Seismic Restraint Requirements for Non-Structural Components
017329 Cutting and Patching
017419 Construction and Demolition Waste Management
017700 Contract Closeout
017836 Warranty Procedures
018113.13 Sustainable Design Requirements – LEED for New Construction and Major Renovations ***ADD-2***
019113 General Commissioning Requirements

DIVISION 02 EXISTING CONDITIONS

022623 Asbestos Abatement
022624 Lead Paint or Lead Containing Components Abatement
024100 Demolition
024116 Structural Demolition

DIVISION 03 CONCRETE

031500 Concrete Accessories
033000 Cast-In-Place Concrete

DIVISION 04 MASONRY
040516 Masonry Mortaring and Grouting
040520 Masonry Anchorage, Reinforcing and Accessories
042000 Unit Masonry

DIVISION 05 METALS
051200 Structural Steel Framing
053100 Steel Decking
054000 Cold-Formed Metal Framing
055000 Metal Fabrications

DIVISION 06 WOOD, PLASTICS, AND COMPOSITES
061000 Rough Carpentry
064000 Architectural Woodwork
066400 Fiberglass Reinforced Panels

DIVISION 07 THERMAL AND MOISTURE PROTECTION
071326 Self-Adhering Sheet Waterproofing
071416 Cold Fluid-Applied Waterproofing
071616 Crystalline Waterproofing
072100 Thermal Insulation
072600 Vapor Retarders
072670 Moisture Barrier
074213 Metal Wall Panels
074243 Composite Panels
074244 Composite Wall Panels
~~075216 SBS Modified Bitumen Roofing~~ ***ADD-2***
075400 Thermoplastic Membrane Roofing
075500 Modified Bituminous Membrane Roofing ***ADD-2***
076210 Prefinished Sheet Metal Flashing and Trim
077233 Prefabricated Roof Curbs
078100 Applied Fireproofing
078400 Firestopping
078443 Fire-Resistant Joint Systems
078700 Smoke Containment System
079000 Joint Protection

DIVISION 08 OPENINGS
081113 Hollow Metal Doors and Frames
081400 Wood Doors
083100 Access Doors and Panels
083324 Overhead Coiling Doors
084113 Aluminum Entrances and Storefronts
084114 Aluminum Interior Doors and Frames
084400 Aluminum Curtain Walls, Windows and Entrances
084426 Structural Glass Curtain Walls
087100 Door Hardware
087113 Automatic Swing Door Operators
088000 Glazing
089100 Louvers

DIVISION 09 FINISHES
092216 Non-Structural Metal Framing
092400 Portland Cement Plastering
092523 Lime Based Plastering
092900 Gypsum Board
093000 Tiling
095100 Acoustical Ceilings
096500 Resilient Flooring

096623 Epoxy-Resin Terrazzo Flooring
~~096800 Carpeting~~ ***ADD-2***
~~096813 Tile Carpeting~~ ***ADD-2***
096816 Carpeting ***ADD-2***
097200 Wall Coverings
098413 Fixed Sound -Absorptive Panels
099000 Painting
099600 High-Performance Coatings

DIVISION 10 SPECIALTIES
101100 Visual Display Boards
101220 Display Cases
101400 Interior and Exterior Signage
102113.19 Plastic Toilet Compartments
102226.10 Vertical Folding Wall System
102600 Wall and Door Protection
102813 Toilet Accessories
104400 Fire Protection Specialties
105626.13 Manual Mobile Storage Shelving
108000 Other Specialties

DIVISION 11 EQUIPMENT
~~115213 Projection Screens~~ ***ADD-2***
115310 Laboratory Casework and Other Furnishings
115313 Fume Hoods and Other Air Containment Units
115343 Laboratory Service Fittings and Fixtures
115350 Laboratory Equipment

DIVISION 12 FURNISHINGS
122113 Horizontal Louver Blinds
122126 Window Shades
123110 Stainless Steel Casework ***ADD-2***
129300 Site Furnishings

DIVISION 13 SPECIAL CONSTRUCTION
Not Used

DIVISION 14 CONVEYING EQUIPMENT
142423 Hydraulic Elevators

DIVISION 15 THROUGH 20
Not Used

VOLUME TWO

DIVISION 21 FIRE SUPPRESSION
211313 Automatic Sprinkler System

DIVISION 22 PLUMBING
220500 Common Work Results for Plumbing
220513 Common Motor Requirements for Plumbing Equipment
220516 Expansion Fittings and Loops for Plumbing Piping
220519 Meters and Gages for Plumbing Piping
220523 General Duty Valves for Plumbing Piping
220529 Hangers and Supports for Plumbing Piping and Equipment
220548 Vibration and Seismic Controls for Plumbing Piping and Equipment
220553 Identification for Plumbing Piping and Equipment
220700 Plumbing Insulation

221116 Plumbing Piping
221119 Plumbing Piping Specialties
221123 Domestic Water Pumps
221223 Facility Indoor Potable Water Storage Tanks
221315 Condensate Drain Piping
221316 Condensate Drain Piping
221319 Sanitary Waste Piping Specialties
221413 Facility Storm Drainage Piping
221423 Storm Drainage Piping Specialties
222000 Laboratory Plumbing
223400 Fuel Fired Domestic Water Heaters
224000 Plumbing Fixtures
224500 Emergency Plumbing Fixtures
224700 Drinking Fountains and Water Coolers
226113 Compressed Air Piping for Laboratory Facilities
226119 Compressed Air Equipment For Laboratory Facilities
226213 Vacuum Piping For Laboratory Facilities
226219 Vacuum Equipment For Laboratory Facilities
226600 Chemical Waste Systems for Laboratory Facilities
226700 Processed Water Systems and Equipment

DIVISION 23 HEATING, VENTILATING, AND AIR-CONDITIONING (HVAC)

230000 Basic Mechanical Requirements
230500 Common Work Results for HVAC
230513 Common Work Results for HVAC Equipment
230516 Expansion Fittings and Loops for HVAC Piping
230517 Sleeves and Sleeve Seals for HVAC Piping
230518 Escutcheons for HVAC Piping
230519 Meters abd Gages for HVAC Piping
230523 General Duty Valves for HVAC Piping
230529 Hangers and Supports for HVAC Piping and Equipment
230548 Vibration and Seismic Controls for HVAC Piping and Equipment
230553 Identification for HVAC Piping and Equipment
230593 Testing, Adjustung and Balancing for HVAC
230700 HVAC Insulation
230800 Commissioning of HVAC
230910 Laboratory Tracking System and Airflow Control
230913 Building Automation System for HVAC
230923 Instrumentation and Control Devices for HVAC
230960 Sequence of Operations for HVAC Controls
231123 Facility Natural Gas Piping
232113 Hydronic Piping
232114 Underground Hydronic Piping
232123 Hydronic Pumps
232300 Refrigerant Piping
232500 HVAC Water Treatment
233113 Metal Ducts
233300 Air Duct Accessories
233417 Laboratory Exhaust Fans
233423 HVAC Power Ventilators
233600 Air Terminal Units
233713 Diffusers, Registers, and Grilles
234100 Particulate Air Filtration
235100 Breechings, Chimneys, and Stacks
235105 Chimney Automation System
235216 Condensing Boilers
237315 Custom Central Station Air Handling Units
237413 Packaged, Direct Expansion Air Handling Units
238126 Variable Refrigerant Flow (VRF) Systems

238219 Fan Coil Units

DIVISION 24 THROUGH 25
Not Used

VOLUME THREE

DIVISION 26 ELECTRICAL
260500 Common Work Results for Electrical
260505 Basic Electrical Materials and Methods
260530 Conduit and Wire
260533 Manholes and Pullboxes
260543 Underground Ducts & Raceways for Electrical Systems
260548 Sound Control
260910 Supplemental Metering and Sub-Metering
260923 Occupancy Motion Sensors
260943 Lighting Control System
261005 Power Distribution (Over 600 Volts)
261105 Substation
261800 Interrupter and Sectionalizing Switches
262416 Branch Circuit Panelboards and Terminal Cabinets
262419 Motor Control Equipment
263210 Automatic Transfer Switch
263215 Standby Power
263353 Uninterruptible Power Supply - UPS
265000 Lighting Fixtures
266000 Laboratory Electrical Requirements

DIVISION 27 COMMUNICATIONS
270536 Cable Tray for Communication Systems
270800 Commissioning of Communications Systems
272000 Data Communications Active Infrastructure ***ADD-2***
~~272000 Electronic Network Systems Infrastructure~~
272126 Structured Telecommunications Cabling and Pathway System ***ADD-2***
273226 Emergency Phones
274116 Integrated Audio-Video Systems and Equipment
275313 Clock System

DIVISION 28 ELECTRONIC SAFETY AND SECURITY
280500 Common Work Results for Electronic Safety and Security
280513 Conductors and Cables for Electronic Safety and Security
280800 Security System Commissioning
281300 Access Control
282300 Video Surveillance
283100 Digital Addressable Fire Alarm and Voice Evacuation System

DIVISION 29 THROUGH 30
Not Used

DIVISION 31 EARTHWORK
312000 Earth~~work~~ Moving ***ADD-2***
316329 Drilled Concrete Piers and Shafts

DIVISION 32 EXTERIOR IMPROVEMENTS
321216 ~~Hot Mix~~ Asphalt Paving ***ADD-2***
321313 ~~Cement~~ Concrete Paving ~~ement~~ ***ADD-2***
321373 Concrete Pav~~ing~~ ing ~~ement~~ Joint Sealants ***ADD-2***
321400 Unit Paving

328400 Irrigation Systems
329000 Planting
329320 Hydroseeding ***ADD-2***
329700 Landscape Maintenance

DIVISION 33 UTILITIES
331100 Water Distribution
333100 Sanitary Sewerage
334100 Storm Drainage
334600 Subdrainage
~~334923 Polymer Corrugated Metal Pipe (CMP)~~ ***ADD-2***

END OF SECTION

SECTION 012300

ALTERNATES

Revised, Addendum #2, 09/01/2017

PART 1 – GENERAL

1.01 SECTION INCLUDES:

A. This Section specifies administrative and procedural requirements governing alternate bid items.

1.02 RELATED SECTIONS:

A. Instructions to Bidders.

B. Bid Form and Designation of Subcontractors.

C. Section 011100: Summary of Work.

PART 2 – PRODUCTS (Not applicable)

PART 3 – EXECUTION

3.01 SPECIFIC

A. Bid alternate item is an amount proposed by bidder and stated on the Bid and Acceptance Form for certain Work defined in the Bidding Documents that may be added to or deducted from the base bid amount if Owner decides to accept a corresponding change in either the amount of Work to be completed, the Contract Documents, or in the products, materials, equipment, systems, or installation methods described in the Contract Documents.

1. The amount added or deducted from the base bid is the net addition to or deducted from the base bid to incorporate bid item Work into the Work. Unless noted otherwise, no other adjustments are made to the Contract Amount, Milestones, or the Contract Time.

3.02 PROCEDURES

A. Contractor shall modify or adjust affected adjacent Work as necessary to completely and fully integrate Owner accepted bid alternate Work.

1. Include as part of each bid alternate item, miscellaneous devices, accessory objects, and similar items incidental to or required for a complete installation whether or not mentioned as part of the bid alternate item.

B. Accepted bid alternate items are subject to the same terms and conditions as other Work of the Contract Documents.

3.03 SCHEDULE OF BID ALTERNATE ITEMS: (See the Contract Documents for Additional Information)

~~A. Alternate 1 (ADD): Provide a 3 year extended warranty for the following work categories: Site Utilities, Landscape, Elevator, Plumbing, HVAC, Electrical, Communications, Laboratory Equipment, Laboratory Fume Hoods, and General Contractor.~~ ***ADD-2***

B. Alternate ~~2~~1 (ADD): Provide <MP-1> cladding at horizontal portion of the north canopy in lieu of using <TPO-1> thermoplastic single ply roofing. Drain locations shall remain unchanged. See sheet A445 for additional info. ***ADD-2***

C. Alternate 2 (ADD): Provide a 3-year extended warranty for the following work categories: Site Utilities, Landscape, Elevator, Plumbing, HVAC, Electrical, Communications, Laboratory Equipment, Laboratory Fume Hoods, and General Contractor. ***ADD-2***

D. Alternate 3 (ADD): Use Quarter Sawn Hickory, NHLA Grade FAS at exposed and semi-exposed conditions in lieu of using Plain sawn Maple, NHLA Grade FAS and Quarter Cut Hickory with Transparent finish for veneer in lieu of Plain-sliced White Maple and Stain color for all lab casework. See Spec Section 115310 for additional info. ***ADD-2***

E. Alternate ~~3~~ 4 (DEDUCT): Use high performance paint <HPC-1> on steel handrails for all stairs instead of stainless steel handrails. ***ADD-2***

END OF SECTION 012300

SECTION 014339
MOCKUPS

Issued, Addendum #2, 09/01/2017

PART 1 GENERAL

1.1 SUMMARY

A. Section Includes:
   1. Construct mock-ups for Architect's visual examination, for quality control, and performance of required testing. Use materials, fabrication and installation methods identical with those indicated for Work. Simulate surrounding conditions as closely as possible.
   2. Install mock-ups under manufacturer's direct supervision employing workers who will be used during actual erection at job site.

1.2 QUALITY ASSURANCE

A. Do not start production run for final job site erection until acceptance has been obtained of tested mock-ups.

B. Representatives of Architect's office and representatives of Owner's office will be present to observe preparation for testing and testing procedures.
   1. Notify Architect in advance of testing.

C. Testing laboratory shall conduct tests in accordance with test procedures specified in individual Specification Sections.

PART 2 PRODUCTS

2.1 EXTERIOR WALL SYSTEM MOCK-UPS

A. Construct one full scale composite specimen for laboratory testing; as shown on the drawings.

B. Include following components:
   1. Glass and glazing materials.
      a. Acceptable reflective glass will establish project standards for color and visual flatness.
   2. Aluminum storefronts, window and curtain wall framing, insulation and finishes.
   3. Sealants (color as selected by Architect).
   4. Anchors and supports.
   5. Outside corner, sill section to masonry, parapet coping.
   6. Other materials necessary to complete assembly.

C. Project Mock-Up:
   1. Install visual mock-up of exterior ground faced (burnished) concrete block unit masonry walls at location to be designated by Owner.
   2. First section of installed curtain wall will serve as mock-up and shall be complete with aluminum framing, vapor retarder, insulation, sealing, and glazing as representative sample of quality and workmanship.
   3. When mock-up has been accepted by Owner and Architect, proceed with installation of entire exterior wall.

2.2 MISCELLANEOUS MOCK-UPS

A. In addition to previous items, construct field (project site) mock-ups and samples for review where indicated in individual Specifications Sections, including: Exterior lime based plastering; Portland cement plastering; exterior metal wall panels; ceiling systems; concrete finishes; and epoxy-resin terrazzo flooring.

PART 3 EXECUTION

Not Used.

END OF SECTION

SECTION 015723
TEMPORARY STORM WATER POLLUTION CONTROL

Revised, Addendum #2, 09/01/2017

PART 1 GENERAL

1.1 SECTION INCLUDES

A. Installation of Storm Water Pollution Prevention Plan (SWPPP) measures as per plans, specifications and the project SWPPP document for the purpose of preventing the discharge of pollutants from the construction site.

B. Compliance with local, state, and federal regulations.

1.2 REFERENCES

A. California Storm Water Best Management Practice Handbook for Construction Activity (BMP Handbook)

B. Construction General Permit (CGP) Order No. 2009-009-DWQ

1.3 SUBMITTAL REQUIREMENTS

A. Product Data: Provide product catalog cut sheets of all temporary and permanent equipment and specialty items that will be provided to comply with the SWPPP, including items necessary for storage, disposal and recycling.

B. Shop Drawings: Provide site plan indicating construction staging, storage, refuse areas and vehicular routing and parking areas.

PART 2 PRODUCTS

2.1 MATERIALS

A. Use materials of a class, grade and type needed to meet the performance described in the BMP Handbook and project SWPPP document.

PART 3 EXECUTION

3.1 QUALIFIED SWPPP DEVELOPER (QSD)

A. The owner shall designate a Qualified SWPPP Developer (QSD) having registrations, certifications and appropriate experience as defined by the State of California Construction General Permit (CGP) Order No. 2009-009-DWQ to perform the following:

1. Prepare, certify and amend as required the project SWPPP document.
2. Assist the owner in obtaining permit coverage prior to the commencement of construction activity through filing of Permit Registration Document (PRDs) on the Storm Water Multiple Application and Report Tracking System (SMARTS).
3. Assist the owner in filing the Notice of Termination (NOT) when construction is complete and final stabilization has been reached.

3.2 QUALIFIED SWPPP PRACTITIONER (QSP)

A. The Contractor ~~owner~~ shall designate a Qualified SWPPP Practitioner (QSP) having registrations, certifications and appropriate experience as defined by the State of California Construction General Permit (CGP) Order No. 2009-009-DWQ to perform the following: ***ADD-2***

1. Conduct storm water and non-storm water visual inspections of Best Management Practice's (BMP) and prepare documentation as prescribed by the CGP according to the risk level and project type.

2. Identifying BMP failures or shortcomings and provide an action plan to correct the deficiencies.
3. Conduct discharge monitoring as prescribed by the CGP for pH, turbidity, and non-visible pollutant monitoring, according to the project risk level and project type.
4. Develop a Rain Event Action Plan (REAP) for Risk Level 2 and 3 projects for qualifying rain events.
5. Conduct pre-storm event visual inspections for qualifying rain events.
6. Implement a Construction Site Monitoring Program (CSMP).
7. Track weather forecasts from the National Oceanic and Atmospheric Administration (NOAA) in accordance with Permit requirements.
8. Complete applicable monitoring, sampling, and inspection logs, forms and documents for filing to the Storm Water Multiple Application and Report Tracking System (SMARTS).
9. Report Numeric Action Level (NAL) exceedances to SMARTS for Risk Level 2 and 3 projects.
10. Provide assistance to the owner with annual reporting requirements.

3.3 PERFORMANCE BY CONTRACTOR

A. General

1. Keep the original SWPPP document in a readily accessible location at the construction site from the commencement of construction activity until submission of the Notice of Termination (NOT) for storm water discharges associated with construction activity. Contractors with day to day operation control over SWPPP implementation shall have the original SWPPP document available at a central location, on-site, for the use of all operators and those identified as having responsibility under the SWPPP.
2. Review the SWPPP. Ensure that all key personnel understand the requirements of the SWPPP.
3. Provide to the QSD, names of all key subcontractors involved in earthwork/land disturbing activities.

B. Good Site Management "Housekeeping"

1. For projects designated as Risk Level 1 and above, implement good site management (i.e., "housekeeping") measures for construction materials that could potentially be a threat to water quality if discharged. At a minimum, the contractor shall implement the following good housekeeping measures:
   a. Conduct an inventory of the products used and/or expected to be used and the end products that are produced and/or expected to be produced. This does not include materials and equipment that are designed to be outdoors and exposed to environmental conditions (i.e. poles, equipment pads, cabinets, conductors, insulators, bricks, etc.).
   b. Cover and berm loose stockpiled construction materials that are not actively being used (i.e. soil, spoils, aggregate, fly-ash, stucco, hydrated lime, etc.).
   c. Store chemicals in watertight containers (with appropriate secondary containment to prevent any spillage or leakage) or in a storage shed (completely enclosed).
   d. Minimize exposure of construction materials to precipitation. This does not include materials and equipment that are designed to be outdoors and exposed to environmental conditions (i.e. poles, equipment pads, cabinets, conductors, insulators, bricks, etc.).
   e. Implement Best Management Practices to prevent the off-site tracking of loose construction and landscape materials.
2. For projects designated as Risk Level 1 and above, implement good housekeeping measures for waste management, which, at a minimum, shall consist of the following:
   a. Prevent disposal of any rinse or wash waters or materials on impervious or pervious site surfaces or into the storm drain system.
   b. Ensure the containment of sanitation facilities (e.g., portable toilets) to prevent discharges of pollutants to the storm water drainage system or receiving water.
   c. Clean or replace sanitation facilities and inspect them regularly for leaks and spills.
   d. Cover waste disposal containers at the end of every business day and during a rain event.
   e. Prevent discharges from waste disposal containers to the storm water drainage system or receiving water.
   f. Contain and securely protect stockpiled waste material from wind and rain at all times unless actively being used.
   g. Implement procedures that effectively address hazardous and non-hazardous spills.

1) Equipment and materials for cleanup of spills shall be available on site. Spills and leaks shall be cleaned up immediately and disposed of properly.
2) Appropriate spill response personnel shall be assigned and trained.
3) Ensure the containment of concrete washout areas and other washout areas that may contain additional pollutants so there is no discharge into the underlying soil and onto the surrounding areas.

3. For projects designated as Risk Level 1 and above, implement good housekeeping for vehicle storage and maintenance, which, at a minimum, shall consist of the following:
   a. Prevent oil, grease, or fuel to leak in to the ground, storm drains or surface waters.
   b. Place all equipment or vehicles, which are to be fueled, maintained and stored in a designated area fitted with appropriate Best Management Practices.
   c. Clean leaks immediately and dispose of leaked materials properly.
4. For projects designated as Risk Level 1 and above, implement good housekeeping for landscape materials, which, at a minimum, shall consist of the following:
   a. Contain stockpiled materials such as mulches and topsoil when they are not actively being used.
   b. Contain all fertilizers and other landscape materials when they are not actively being used.
   c. Discontinue the application of any erodible landscape material within two days before a forecasted rain event or during periods of precipitation.
   d. Apply erodible landscape material at quantities and application rates according to manufacture recommendations or based on written specifications by knowledgeable and experienced field personnel.
   e. Stack erodible landscape material on pallets and cover or store such materials when not being used or applied.
5. Maintain an inventory of materials in association with the Material Safety Data Sheet (MSDS) per OSHA requirements. Provide to QSP upon request.
6. For projects designated as Risk Level 1 and above, implement good housekeeping measures on the construction site to control the air deposition of site materials and from site operations. Such particulates can include, but are not limited to, sediment, nutrients, trash, metals, bacteria, oil and grease and organics.
7. For projects designated as Risk Level 2 or 3, implement the Rain Event Action Plan (REAP) as directed by the QSP.
8. For projects designated as Risk Level 1 and above, begin implementing repairs or changes to BMPs within 72 hours of identification as directed by the QSP and complete the changes as soon as possible.

C. Non-Storm Water Management
   1. For projects designated as Risk Level 1 and above, implement measures to control all non-storm water discharges during construction.
   2. For projects designated as Risk Level 1 and above, wash vehicles in such a manner as to prevent non-storm water discharges.
   3. For projects designated as Risk Level 1 and above, clean streets in such a manner as to prevent unauthorized non-storm water discharges.

D. Erosion Control
   1. For projects designated as Risk Level 1 and above, implement effective wind erosion control.
   2. For projects designated as Risk Level 1 and above, provide effective soil cover for inactive areas and all finished slopes, open space, utility backfill, and completed lots.
   3. For projects designated as Risk Level 1 and above, limit the use of plastic materials when more sustainable, environmentally friendly alternatives exist. Where plastic materials are deemed necessary, the discharger shall consider the use of plastic materials resistant to solar degradation.

E. Sediment Controls
   1. For projects designated as Risk Level 1 and above, establish and maintain effective perimeter controls and stabilize all construction entrances and exits to sufficiently control erosion and sediment discharges from the site.

2. For projects designated as Risk Level 1 and above, on sites where sediment basins are to be used, at minimum, install and maintain sediment basins according to the method provided in CASQA's Construction BMP Guidance Handbook.
3. For projects designated as Risk Level 2 or 3, implement appropriate erosion control Best Management Practices (runoff control and soil stabilization) in conjunction with sediment control Best Management Practices for areas under active construction. Active areas of construction are areas undergoing land surface disturbances.
4. For projects designated as Risk Level 2 or 3, install linear sediment controls along the toe of the slope, face of the slope, and at the grade breaks of exposed slopes to comply with sheet flow lengths in accordance with Table 1.

Table 1 – Critical Slope/Sheet Flow Length Combinations

Slope Percentage	Sheet Flow Length Not to Exceed
0-25%	20 feet
25-50%	15 feet
Over 50%	10 feet

5. For projects designated as Risk Level 2 or 3, ensure that construction activity traffic to and from the project is limited to entrances and exits that employ effective controls to prevent offsite tracking of sediment.
6. For projects designated as Risk Level 2 or 3, ensure that all storm drain inlets and perimeter controls, runoff control Best Management Practices, and pollutant controls at entrances and exits (e.g. tire washoff locations) are maintained and protected from activities that reduce their effectiveness.
7. For projects designated as Risk Level 2 or 3, inspect on a daily basis all immediate access roads daily. At a minimum daily (when necessary) and prior to any rain event, remove any sediment or other construction activity related materials that are deposited on the roads (by vacuuming or sweeping).

F. Run-on and Run-off Controls

1. For projects designated as Risk Level 1 and above, effectively manage all run-on, all runoff within the site and all runoff that discharges off the site. Run-on from offsite shall be directed away from all disturbed areas or shall collectively be in compliance with the effluent limitations in this General Permit.

END OF SECTION

SECTION 016210
PRODUCT OPTIONS AND SUBSTITUTION REQUIREMENTS

Revised, Addendum #2, 09/01/2017

PART 1 GENERAL

1.1 SUMMARY

A. Section Includes:

~~1. Procedures, requirements and limitations for considering substitutions.~~ ***ADD-2***

2. Criteria for selecting product options and substitutions.

B. Related Sections: ***ADD-2***

1. Facilities Lease Agreement.
2. Section 016211 – Substitution Request Form.

1.2 DEFINITIONS

A. "Product" means material, equipment, assembly, system, manufacturer, brand, trade name, element, item or similar as applicable.

1. Provide new products free from defects and deficiencies unless otherwise noted.
2. Provide components and accessories necessary for a complete system by same manufacturer unless otherwise specified.

B. Terms such as “approved substitute”, "equal to", "accepted by", "approved by", or other synonymous terms mean that acceptance of proposed product is subject to approval by Architect after submittal requirements are met. Architect’s decision is final and binding.

C. Available Manufacturers: See below.

D. Except where "no substitutions", "same as existing" or "match existing" are noted, term "or approved substitute" is implied throughout, subject to prior approval conditions specified including where the term "Available Manufacturers" is included.

~~1.3 SUBMITTALS~~ *ADD-2*

~~A. Submit requests for substitution in writing to Architect at least 10 calendar days prior to bid date and hour. Requests received after this time will not be considered.~~

~~B. Clearly define and describe proposed substitute product including following items:~~

~~1. Fully completed Section 016211 - Substitution Request Form.~~

~~2. Manufacturer's printed information supporting claim that proposed product meets specified requirements. Provide following as applicable:~~

~~a. Literature Specifications Drawings Cut Sheets Performance data List of reference projects of similar size, value and complexity Model numbers Other information necessary to completely describe item.~~

~~3. Provide a point by point comparison between key features of specified Basis of Design item and proposed substitution.~~

~~4. Provide submitted materials marked with Article and Paragraph references from Specification using highlighter, marker and flags on pages to facilitate review and show that substitution meets specified requirements.~~

~~5. Provide a letter indicating requestor has reviewed Contract Documents and examined site (if needed) and that proposed substitution meets specified requirements.~~

~~C. Accepted substitutions will be published in writing. No information or indication of acceptance will be provided by means other than written Addendum during bidding or Architect’s written construction administration document following bidding. Refer to “Limitations on Substitutions after Bids or During Construction" in this Section.~~

~~D. Bid and construct according to Contract Documents unless approval of substitution is provided in writing.~~

E. Architect is not obligated to state reasons for rejecting substitution.

1.4 LIMITATIONS ON SUBSTITUTIONS AFTER BIDS OR DURING CONSTRUCTION *ADD-2*

A. Intent is to limit unnecessary substitutions after bids. Changes will not be allowed to accepted list of products, except when specified or accepted product subsequently is determined as not meeting requirements of Contract Documents or product becomes unavailable, and then only under following conditions:

1. Orders were placed in timely manner as required after list of materials is accepted. No excuse or proposed substitution will be considered for products due to unavailability unless proof is submitted that firm orders were placed in a timely manner.
2. Reason for unavailability is beyond control of Contractor: prolonged strikes or lockouts which will delay Project to an extent unacceptable to Owner, bankruptcy, discontinuance of a product, delays or Acts of God or other similar reasons.
3. Request for substitution is submitted in writing within 10 days after date Contractor becomes aware product does not comply with specifications or has become unavailable, accompanied by supporting evidence.
4. No extra cost to Owner.
5. Substitution does not compromise design intent or quality required.
6. Substitute product is acceptable to Owner and Architect.
7. Requested substitution offers Owner a substantial advantage in cost, time, energy conservation, or other considerations, after deducting additional responsibilities Owner must assume. Owner's additional responsibilities may include compensation to Architect for redesign and evaluation services, increased cost of other construction by Owner, and similar considerations.
8. Requested substitution does not require revisions to Contract Documents.
9. Requested substitution is consistent with the Contract Documents and will produce intended and indicated results.
10. Substitution request is fully documented and properly submitted.
11. Requested substitution will not adversely affect Contractor's Construction Schedule.
12. Requested substitution has received necessary approvals of authorities having jurisdiction.
13. Requested substitution is compatible with other portions of Work.
14. Requested substitution has been coordinated with other portions of Work.
15. Requested substitution provides specified warranty.
16. If requested substitution involves more than one trade, requested substitution has been coordinated with other portions of the Work, is uniform and consistent, is compatible with other products, and is acceptable to installers involved.

B. All substitutions that result in changes to or affecting the Structural, Access or Fire & Life Safety portions of the project shall be submitted to DSA for review and approval as required per CBC 2013 Part 1 Section 4-338.

PART 2 MATERIALS

2.1 PRODUCTS

A. Architect and Owner reserve right to accept or reject proposed product. Should a proposed product be unable to meet requirements to satisfaction of Architect, product shall not be used. No additional compensation will be allowed for required Work resulting from use of product accepted by Addendum.

B. Use only one brand, manufacturer, source or type for like products unless otherwise approved or specified. Contractor is obligated to do so unless otherwise approved in writing.

C. Provide pricing based on products listed in Contract Documents. Contract award is based on use of specified products or substitutions approved prior to bidding or pricing.

1. By execution of Contract, Contractor agrees and understands Work will be accomplished with products specified or accepted by substitution.

D. Basis of Design Products:

1. Reference to "Basis of Design" and a named specific product or manufacturer is intended to establish criteria for use of that product and manufacturer based on that products published information whether or not those criteria are explicitly stated in Specifications.
2. Criteria may establish higher performance requirement than specified reference or performance standards. Such reference is intended to establish minimum level of quality, standard of design, function, appearance, type, strength, durability, construction, efficiency, sound level, finish, appearance, availability, service and similar characteristics determined necessary for Project.
3. Specification criteria including basis of design products are considered as a whole.
4. Other products or manufacturers listed meet features, performance, appearance and other criteria established by that product or manufacturer even if product must be customized to meet those criteria.
5. When other products are listed in a Section those products may be used if they meet entire specification criteria including criteria implied by product listed as basis of design. Meeting some requirements but not meeting criteria established by basis of design product does not qualify as meeting specified requirements.
6. Products or manufacturers accepted for substitution will be acceptable provided they fully comply with requirements and match basic and essential criteria of product used for basis of specification or design, including level of fabrication quality, as determined by Architect.

E. Reference Standards for Products:
1. When references to Federal Specification, ASTM Standard, American National Standards Institute (ANSI) or similar association standards are listed for product quality, provide an acceptable affidavit certifying that proposed substitution for this Project meets with same standard.
2. Submit supporting test data to substantiate compliance.

F. Substitute products shall:
1. Be available in same range of colors, textures, dimensions, gauges, types, and finishes as specified product.
2. Be equal to specified item in strength, durability, efficiency, serviceability, ease and cost of maintenance.
3. Be compatible with building design.
4. Not necessitate design modifications.
5. Not impose additional work or require changes in work of Prime Contractor, or other Subcontractor, vendor, or materials supplier.
6. Not add cost to Owner.
7. Be similar in essential fabrication features.

G. Contractor, supplier or manufacturer providing accepted substitute product shall bear cost of required modifications to spaces, services, utilities and other features as result of accepting substitute products, including but not limited to:
1. Larger capacity mechanical or electrical service, devices or utilities resulting from acceptance of product for bidding purposes.
2. Modification to pipes, conduits, ducts, and controls for conveying, distributing, and controlling those services or utilities.
3. Modification to insulation, wrappings, coatings, or other integral features of lines or items conveying those lines.

H. Timely Placement of Product Orders: Place product orders in a timely manner, within ten days after acceptance of submitted list of materials.

2.2 LABELS, NAMEPLATES AND TRADEMARKS

A. Provide permanent nameplate on each item of service-connected or power-operated equipment. Locate nameplate on easily accessible surface.
1. Nameplate shall indicate manufacturer, model number, serial number, capacity, speed, electrical characteristics and similar essential operating data.

B. UL fire rating labels and other labels which must be visible after installation shall be located on inconspicuous surfaces.

1. Other labels and trademarks shall be located on concealed surfaces or shall be removable without damaging surfaces.
2. Do not permanently attach or imprint labels or trademarks on surfaces which will be exposed to view in occupied spaces.

C. Do not paint, deface or conceal required nameplates or labels.

PART 3 EXECUTION

Not Used.

END OF SECTION

SECTION 018113
SUSTAINABLE DESIGN REQUIREMENTS - LEED FOR NEW CONSTRUCTION AND MAJOR RENOVATIONS

Revised, Addendum #2, 09/01/2017

PART 1 GENERAL

1.1 SUMMARY

A. Section includes general requirements and procedures for compliance with certain USGBC LEED prerequisites and credits needed for Project to obtain LEED~~[Certified] [~~ **Silver**~~] [Gold] [Platinum]~~ certification based on USGBC's "LEED 2009 for New Construction & Major Renovations." (See attached certification planning spreadsheet).). Achievement of any particular pre-requisite, credit, group of credits or achievement of any certification level is not guaranteed because there are many factors, actions and decisions outside the control of design and construction team that can affect achievement of the certification. ***ADD-2***

1. Contractor and subcontractors must prepare written plans for fulfillment of LEED credits. See attached LEED Certification Planning Spreadsheet.
2. Other LEED prerequisites and credits needed to obtain LEED certification depend on material selections and may not be specifically identified as LEED requirements. Compliance with requirements needed to obtain LEED prerequisites and credits should be considered when evaluating substitution requests and comparable product requests.
3. Some LEED requirements depend on actions that are not Work of this Contract.
4. A copy of the “LEED NC 2009 Certification Planning Matrix” is attached at the end of this Section for information only.

B. Assist Owner and Owner’s Agent for LEED with providing documentation, completing LEED templates so project can be submitted for LEED 2009 for New Construction & Major Renovations certification.

C. Prepare required documentation and submittals described in this Section, throughout the Contract Documents and as documented in the LEED 2009 for New Construction & Major Renovations reference guide and online submittal portal.

D. This Section governs entirety of Construction Documents and Work of this Contract must conform to requirements of this Section whether or not this Section is referenced by other Sections in Construction Documents.

E. Conform to the requirements of the Living Build Challenge 2.1 for avoiding materials listed on the Red List, except as included in Construction Documents.

1.2 LEED PREREQUISITES

A. Prerequisite SS 1, Construction Activity Pollution Prevention: Requires an erosion and sedimentation control plan complying with certain EPA recommendations or local requirements if more stringent.

B. Prerequisite SS 2, Environmental Site Assessment: Requires that a Phase I Environmental Site Assessment to determine if there is site contamination, and if suspected, conduct a Phase II Environmental Site Assessment.

C. Prerequisite WE 1, Water Use Reduction: Requires increased water efficiencies within buildings employing strategies to reduce water usage by 20 percent from baseline buildings.

D. Prerequisite WE 2, Minimize Potable Water Use for Medical Equipment Cooling: Requires all medical equipment will not be using potable water for cooling, except for emergency backup systems.

E. Prerequisite EA 1, Fundamental Commissioning of the Building Energy Systems: Requires that commissioning be performed to verify that the building’s energy related systems are installed, calibrated and perform according to the owner’s project requirements (OPR), basis of design , and construction documents.

F. Prerequisite EA 2, Minimum Energy Performance: Requires compliance with the mandatory provisions and the prescriptive requirements or performance requirements of ASHRAE/IESNA Standard 90.1-2007 (with errata but without amendments). It affects the selection of materials that make up the building envelope, mechanical and electrical systems.

G. Prerequisite EA 3, Fundamental Refrigerant Management: Requires Zero use of CFC-based refrigerants in new base building HVAC&R systems. Complete a comprehensive CFC phase-out conversion prior to project completion if existing base building HVAC equipment, containing CFCs, is reused.

H. Prerequisite MR 1, Storage & Collection of Recyclables: Requires the provision of a dedicated area for the collection and storage of non-hazardous materials for recycling.

I. Prerequisite MR2, PBT Source Reduction – Mercury: Requires to reduce mercury-containing products and devices and mercury discharge through product substitution, capture and recycling.

J. Prerequisite EQ 1, Minimum IAQ Performance: Requires compliance with Sections 4 through 7 in ASHRAE 62.1-2004, Ventilation for Acceptable Indoor Air Quality. Naturally ventilated buildings shall comply with ASHRAE 62.1-2004, paragraph 5.1.

K. Prerequisite EQ 2, Environmental Tobacco Smoke (ETS) Control: Requires that smoking be prohibited within the building and that designated outside smoking areas be located at least 50 feet away from entries, outdoor-air intakes, bus stops, qualifying places of respite, operate windows and other locations where occupants could inadvertently come in contact with ETS when occupying, entering or leaving the building .

1.3 DEFINITIONS

A. Chain-of-Custody Certificates: Certificates signed by manufacturers certifying that wood used to make products was obtained from forests certified by an FSC-accredited certification body to comply with FSC STD-01-001, "FSC Principles and Criteria for Forest Stewardship." Certificates shall include evidence that manufacturer is certified for chain of custody by an FSC-accredited certification body.

B. Regional Materials: Materials that have been extracted, harvested, or recovered, as well as manufactured, within 500 miles (800 km) of Project site. If only a fraction of a product or material is extracted/harvested/recovered and manufactured locally, then only that percentage (by weight) shall contribute to the regional value.

C. Recycled Content: The recycled content value of a material assembly shall be determined by weight. The recycled fraction of the assembly is then multiplied by the cost of assembly to determine the recycled content value.

1. "Post-consumer" material is defined as waste material generated by households or by commercial, industrial, and institutional facilities in their role as end users of the product, which can no longer be used for its intended purpose.
2. "Pre-consumer" material is defined as material diverted from the waste stream during the manufacturing process. Excluded is reutilization of materials such as rework, regrind, or scrap generated in a process and capable of being reclaimed within the same process that generated it.

1.4 ADMINISTRATIVE REQUIREMENTS

A. Respond to questions and requests from Architect and the USGBC regarding LEED credits that are the responsibility of the Contractor, that depend on product selection or product qualities, or that depend on Contractor's procedures until the USGBC has made its determination on the project's LEED certification application. Document responses as informational submittals.

1.5 ACTION SUBMITTALS

A. This Contract includes administrative submittal requirements under each Section for LEED information required to demonstrate compliance with LEED pre-requisites and credits. This Contract includes providing completed USGBC LEED letter template online and hardcopy documentation for credits assigned to Contractor for the construction phase. Cooperate with others assigned to submit letter templates and provide information or documents needed to complete those templates.

B. General: Provide LEED submittals required by Specification Sections. This contract includes providing LEED submittals required by LEED online and LEED 2009 for New Construction & Major Renovations Reference Guide whether or not specified in individual Specification Sections.

C. Provide documentation required for LEED certification in addition to submittals required for normal construction approvals.

D. Project Materials Cost Data: Provide statement indicating total cost for building materials used for Project, excluding mechanical, electrical, and plumbing components, and specialty items such as elevators and equipment. Include statement indicating total cost for wood-based materials used for Project.

E. LEED submittals are in addition to other submittals. If submitted item is identical to that submitted to comply with other requirements, submit duplicate copies as a separate submittal to verify compliance with indicated LEED requirements.

F. LEED Documentation Submittals:

1. Credit EA 5: Product data and wiring diagrams for sensors and data collection system used to provide continuous metering of building energy-consumption performance over ~~[time] [~~a period of time of not less than one year of postconstruction occupancy~~]~~. ***ADD-2***
2. Credit MR 2: Comply with Section 017419 "Construction Waste Management and Disposal."
3. Credit MR 3: Receipts for salvaged and refurbished materials used for Project, indicating sources and costs for salvaged and refurbished materials.
4. Credit MR 4: Product data and certification letter from product manufacturers indicating percentages by weight of post-consumer and pre-consumer recycled content for products having recycled content. Include statement indicating material cost for each product having recycled content.
5. Credit MR 5: Product data for regional materials indicating location and distance from Project of material manufacturer and point of extraction, harvest, or recovery for each raw material. Include statement indicating cost for each regional material and the fraction by weight that is considered regional.
6. Credit MR 7: Product data and chain-of-custody certificates for products containing certified wood. Include statement indicating cost for each certified wood product.
7. Credit IEQ 3.1:
   a. Construction indoor-air-quality management plan.
   b. Product data for temporary filtration media.
   c. Product data for filtration media used during occupancy.
   d. Construction Documentation: Six photographs at three different times during the construction period, along with a brief description of the SMACNA approach employed, documenting implementation of the indoor-air-quality management measures, such as protection of ducts and on-site stored or installed absorptive materials.
8. Credit IEQ 3.2:
   a. Signed statement describing the building air flush-out procedures including the dates when flush-out was begun and completed and statement that filtration media was replaced after flush-out.
   b. Product data for filtration media used during flush-out and during occupancy.
   c. Report from testing and inspecting agency indicating results of indoor-air-quality testing and documentation showing compliance with indoor-air-quality testing procedures and requirements.
9. Credit IEQ 4.1: Product data for adhesives and sealants used inside the weatherproofing system indicating VOC content of each product used.
10. Credit IEQ 4.2: Product data for paints and coatings used inside the weatherproofing system indicating VOC content of each product used.
11. Credit IEQ 4.4: Product data for products containing composite wood or agrifiber products or wood glues indicating that they do not contain urea-formaldehyde resin.

1.6 INFORMATIONAL SUBMITTALS

A. Qualification Data: For LEED coordinator.

B. Project Materials Cost Data: Provide statement indicating total cost for materials used for Project. Costs exclude labor, overhead, and profit. Include breakout of costs for the following categories of items:
   1. Furniture.
   2. Plumbing.
   3. Mechanical.
   4. Electrical.
   5. Specialty items such as elevators and equipment.
   6. Wood-based construction materials.

C. LEED Action Plan and Progress Reports: Provide action plan and status reports of LEED credit compliance for each pre-requisite and credit as agreed at commencement of Work and at least monthly thereafter. Prior to sub-contracting, provide a report showing compliance with each LEED credit targeted. In addition, submit regular reports comparing actual construction and purchasing activities with pre-requisites and credits shown on spreadsheet for provided by Architect:
   1. Credit MR 2: Waste management plan complying with Section 017419 "Construction Waste Management and Disposal."
   2. Credit MR 3: List of proposed salvaged, refurbished, and reused materials. Identify each material that will be salvaged, refurbished, or reused, including its source, cost, and replacement cost if the item was to be purchased new.
   3. Credit MR 4: List of proposed materials with recycled content. Indicate cost, post-consumer recycled content, and pre-consumer recycled content for each product having recycled content.
   4. Credit MR 5: List of proposed regional materials. Identify each regional material, including its source, cost, and the fraction by weight that is considered regional.
   5. Credit MR 7: List of proposed certified wood products. Indicate each product containing certified wood, including its source and cost of certified wood products.
   6. Credit IEQ 3.1: Construction indoor-air-quality management plan.

D. LEED Progress Reports: Concurrent with each Application for Payment, submit reports comparing actual construction and purchasing activities with LEED action plans for the following:
   1. Credit MR 2: Waste reduction progress reports complying with Section 017419 "Construction Waste Management and Disposal."
   2. Credit MR 3: Salvaged, refurbished, and reused materials.
   3. Credit MR 4: Recycled content.
   4. Credit MR 5: Regional materials.
   5. Credit MR 7: Certified wood products.

1.7 QUALITY ASSURANCE

A. Construction Team LEED Coordinator: Engage an experienced LEED-Accredited Professional to coordinate LEED requirements. LEED coordinator may also serve as waste management coordinator. Construction team LEED coordinator for the site will coordinate with and cooperate with Project LEED Administrator.

PART 2 PRODUCTS

2.1 MATERIALS, GENERAL

A. Provide products and procedures necessary to obtain LEED credits required in this Section. Although other Sections may specify some requirements that contribute to LEED credits, the Contractor shall determine additional materials and procedures necessary to obtain LEED credits indicated.

2.2 MATERIALS COST INFORMATION

A. Construction Materials Cost Data
   1. Provide a Construction Materials Cost Data Report summarizing total cost of all construction materials used.
   2. Breakdown the materials cost by Specification Division.
   3. Provide cost for individual materials with detail needed to show compliance with applicable MR credits.

4. Provide Construction Materials Cost Data Report at end of construction.

2.3 SALVAGED, REFURBISHED, OR REUSED MATERIALS

A. Credit MR 3: Not less than **5** [~~**10**~~] percent of building materials (by cost) shall be salvaged, refurbished, or reused materials. The following materials may be salvaged, refurbished, or reused materials: ***ADD-2***

1. <Insert list of materials>.

2.4 RECYCLED CONTENT OF MATERIALS

A. Credit MR 4: Building materials shall have recycled content such that post-consumer recycled content plus one-half of pre-consumer recycled content for Project constitutes a minimum of **10** [~~**20**~~] percent of cost of materials used for Project. ***ADD-2***

1. Cost of post-consumer recycled content plus one-half of pre-consumer recycled content of an item shall be determined by dividing weight of post-consumer recycled content plus one-half of pre-consumer recycled content in the item by total weight of the item and multiplying by cost of the item.
2. Do not include [~~**furniture,**~~] plumbing, mechanical and electrical components, and specialty items such as elevators and equipment in the calculation. ***ADD-2***

2.5 REGIONAL MATERIALS

A. Credit MR 5: Not less than **10** [~~**20**~~] percent of building materials (by cost) shall be regional materials. ***ADD-2***

2.6 CERTIFIED WOOD

A. Credit MR 7: Not less than 50 percent (by cost) of wood-based materials shall be produced from wood obtained from forests certified by an FSC-accredited certification body to comply with FSC STD-01-001, "FSC Principles and Criteria for Forest Stewardship."

1. Wood-based materials include, but are not limited to, the following materials when made from wood, engineered wood products, or wood-based panel products:
   a. Rough carpentry.
   b. Miscellaneous carpentry.
   c. Heavy timber construction.
   d. Wood decking.
   e. Metal-plate-connected wood trusses.
   f. Structural glued-laminated timber.
   g. Finish carpentry.
   h. Architectural woodwork.
   i. Wood paneling.
   j. Wood veneer wall covering.
   k. Wood flooring.
   l. Wood lockers.
   m. Wood cabinets.
   n. Furniture.

2.7 LOW-EMITTING MATERIALS

A. Credit IEQ 4.1: For field applications that are inside the weatherproofing system, adhesives and sealants shall comply with the following VOC content limits when calculated according to 40 CFR 59, Subpart D (EPA Method 24):

1. Wood Glues: 30 g/L.
2. Metal-to-Metal Adhesives: 30 g/L.
3. Adhesives for Porous Materials (Except Wood): 50 g/L.
4. Subfloor Adhesives: 50 g/L.
5. Plastic Foam Adhesives: 50 g/L.
6. Carpet Adhesives: 50 g/L.
7. Carpet Pad Adhesives: 50 g/L.

8. VCT and Asphalt Tile Adhesives: 50 g/L.
9. Cove Base Adhesives: 50 g/L.
10. Gypsum Board and Panel Adhesives: 50 g/L.
11. Rubber Floor Adhesives: 60 g/L.
12. Ceramic Tile Adhesives: 65 g/L.
13. Multipurpose Construction Adhesives: 70 g/L.
14. Fiberglass Adhesives: 80 g/L.
15. Contact Adhesive: 80 g/L.
16. Structural Glazing Adhesives: 100 g/L.
17. Wood Flooring Adhesive: 100 g/L.
18. Structural Wood Member Adhesive: 140 g/L.
19. Single-Ply Roof Membrane Adhesive: 250 g/L.
20. Special-Purpose Contact Adhesive (contact adhesive that is used to bond melamine-covered board, metal, unsupported vinyl, rubber, or wood veneer 1/16 inch or less in thickness to any surface): 250 g/L.
21. Top and Trim Adhesive: 250 g/L.
22. Plastic Cement Welding Compounds: 250 g/L.
23. ABS Welding Compounds: 325 g/L.
24. CPVC Welding Compounds: 490 g/L.
25. PVC Welding Compounds: 510 g/L.
26. Adhesive Primer for Plastic: 550 g/L.
27. Sheet-Applied Rubber Lining Adhesive: 850 g/L.
28. Aerosol Adhesive, General-Purpose Mist Spray: 65 percent by weight.
29. Aerosol Adhesive, General-Purpose Web Spray: 55 percent by weight.
30. Special-Purpose Aerosol Adhesive (All Types): 70 percent by weight.
31. Other Adhesives: 250 g/L.
32. Architectural Sealants: 250 g/L.
33. Nonmembrane Roof Sealants: 300 g/L.
34. Single-Ply Roof Membrane Sealants: 450 g/L.
35. Other Sealants: 420 g/L.
36. Sealant Primers for Nonporous Substrates: 250 g/L.
37. Sealant Primers for Porous Substrates: 775 g/L.
38. Modified Bituminous Sealant Primers: 500 g/L.
39. Other Sealant Primers: 750 g/L.

B. Credit IEQ 4.2: For field applications that are inside the weatherproofing system, paints and coatings shall comply with the following VOC content limits when calculated according to 40 CFR 59, Subpart D (EPA Method 24):

1. Flat Paints and Coatings: VOC not more than 50 g/L.
2. Nonflat Paints and Coatings: VOC not more than 150 g/L.
3. Dry-Fog Coatings: VOC not more than 400 g/L.
4. Primers, Sealers, and Undercoaters: VOC not more than 200 g/L.
5. Anticorrosive and Antirust Paints Applied to Ferrous Metals: VOC not more than 250 g/L.
6. Zinc-Rich Industrial Maintenance Primers: VOC not more than 340 g/L.
7. Pretreatment Wash Primers: VOC not more than 420 g/L.
8. Clear Wood Finishes, Varnishes: VOC not more than 350 g/L.
9. Clear Wood Finishes, Lacquers: VOC not more than 550 g/L.
10. Floor Coatings: VOC not more than 100 g/L.
11. Shellacs, Clear: VOC not more than 730 g/L.
12. Shellacs, Pigmented: VOC not more than 550 g/L.
13. Stains: VOC not more than 250 g/L.

C. Credit IEQ 4.4: Composite wood, agrifiber products, and adhesives shall not contain urea-formaldehyde resin.

PART 3 EXECUTION

3.1 [REFRIGERANT] [AND] [CLEAN-AGENT FIRE-EXTINGUISHING-AGENT] REMOVAL

A. Prerequisite EA 3: Remove CFC-based refrigerants from existing HVAC&R equipment indicated to remain and replace with refrigerants that are not CFC based. Replace or adjust existing equipment to accommodate new refrigerant as described in HVAC Sections.

B. Credit EA 4: Remove clean-agent fire-extinguishing agents that contain HCFCs or halons and replace with agent that does not contain HCFCs or halons. See Section 212200 "Clean-Agent Fire-Extinguishing Systems" for additional requirements.

3.2 MEASUREMENT AND VERIFICATION

A. Credit EA 5: Implement measurement and verification plan consistent with Option B: Energy Conservation Measure Isolation ~~[Option D: Calibrated Simulation, Savings Estimation Method 2]~~ in the EVO's "International Performance Measurement and Verification Protocol (IPMVP), Volume III: Concepts and Options for Determining Energy Savings in New Construction," and as further defined by the following: ***ADD-2***

1. ~~<Insert measurement and verification plan design team submitted for credit>~~ Verify implementation plan with Owner for ongoing monitoring and potential correction of building energy consumption while in operation. ***ADD-2***

B. If not already in place, install metering equipment to measure energy usage. Monitor, record, and trend log measurements.

C. Evaluate energy performance and efficiency by comparing actual to predicted performance.

D. Measurement and verification period shall cover at least one year of postconstruction occupancy.

3.3 CONSTRUCTION WASTE MANAGEMENT

A. Credit MR 2: Comply with Section 017419 "Construction Waste Management and Disposal."

3.4 CONSTRUCTION INDOOR-AIR-QUALITY MANAGEMENT

A. Credit IEQ 3.1: Comply with SMACNA's "SMACNA IAQ Guideline for Occupied Buildings under Construction."

1. If Owner authorizes use of permanent heating, cooling, and ventilating systems during construction period as specified in Section 015000 "Temporary Facilities and Controls," install filter media having a MERV 8 according to ASHRAE 52.2 at each return-air inlet for the air-handling system used during construction.
2. Replace all air filters immediately prior to occupancy.

B. Credit IEQ 3.2:[Comply with one of the following requirements:]

1. After construction ends, prior to occupancy and with all interior finishes installed, perform a building flush-out by supplying a total volume of 14000 cu. ft. (4 300 000 L) of outdoor air per sq. ft. (sq. m) of floor area while maintaining an internal temperature of at least 60 deg F (16 deg C) and a relative humidity no higher than 60 percent.
   a. ~~<Insert operating requirements>~~ Will require +/- 2 weeks of 100% outdoor air flush. ***ADD-2***
2. If occupancy is desired prior to flush-out completion, the space may be occupied following delivery of a minimum of 3500 cu. ft. (1 070 000 L) of outdoor air per sq. ft. (sq. m) of floor area to the space. Once a space is occupied, it shall be ventilated at a minimum rate of 0.30 cfm per sq. ft. (1.52 L/s per sq. m) of outside air or the design minimum outside air rate determined in Prerequisite IEQ 1, whichever is greater. During each day of the flush-out period, ventilation shall begin a minimum of three hours prior to occupancy and continue during occupancy. These conditions shall be maintained until a total of 14000 cu. ft./sq. ft. (4 300 000 L/sq. m) of outside air has been delivered to the space.
   ~~a. <Insert operating requirements>.~~ ***ADD-2***
3. Air-Quality Testing:
   a. Conduct baseline indoor-air-quality testing, after construction ends and prior to occupancy, using testing protocols consistent with the EPA's "Compendium of Methods for the Deter-

mination of Air Pollutants in Indoor Air," and as additionally detailed in the USGBC's "Green Building Design and Construction Reference Guide."

b. Demonstrate that the contaminant maximum concentrations listed below are not exceeded:
   1) Formaldehyde: 27 ppb.
   2) Particulates (PM10): 50 micrograms/cu. m.
   3) Total Volatile Organic Compounds (TVOC): 500 micrograms/cu. m.
   4) 4-Phenylcyclohexene (4-PH): 6.5 micrograms/cu. m.
   5) Carbon Monoxide: 9 ppm and no greater than 2 ppm above outdoor levels.

c. For each sampling point where the maximum concentration limits are exceeded, conduct additional flush-out with outside air and retest the specific parameter(s) exceeded to indicate the requirements are achieved. Repeat procedure until all requirements have been met. When retesting noncomplying building areas, take samples from same locations as in the first test.

d. Air-sample testing shall be conducted as follows:
   1) All measurements shall be conducted prior to occupancy but during normal occupied hours, and with building ventilation system starting at the normal daily start time and operated at the minimum outside air flow rate for the occupied mode throughout the duration of the air testing.
   2) Building shall have all interior finishes installed including, but not limited to, millwork, doors, paint, carpet, and acoustic tiles. Nonfixed furnishings such as workstations and partitions are encouraged, but not required, to be in place for the testing.
   3) Number of sampling locations varies depending on the size of building and number of ventilation systems. For each portion of building served by a separate ventilation system, the number of sampling points shall not be less than one per 25,000 sq. ft. (2300 sq. m) or for each contiguous floor area, whichever is larger, and shall include areas with the least ventilation and greatest presumed source strength.
   4) Air samples shall be collected between 3 and 6 feet (0.9 and 1.8 m) from the floor to represent the breathing zone of occupants, and over a minimum four-hour period.

END OF SECTION

SECTION 024100
DEMOLITION

Revised, Addendum #2, 09/01/2017

PART 1 GENERAL

1.1 SUMMARY

A. Section Includes:

1. Protection of public properties/utilities and existing adjacent private structures/features.
2. Disconnection of utility services to building.
3. Demolition of buildings and surface features indicated.
4. Removal of demolition material from site.

B. Related Sections: ***ADD-2***

1. Section 017419 - Construction and Demolition Waste Management.
2. Section 022623 - Asbestos Abatement.
3. Section 022624 - Lead Paint or Lead Containing Components Abatement.
4. ~~Section 315000 - Excavation Support and Protection.~~
5. Section 312000 - Earthwork.
6. ~~Section 312300 - Excavation and Fill.~~
7. ~~Section 333000 – Sanitary Sewerage Utilities.~~

1.2 CONDITION AND ACCEPTANCE OF PREMISES

A. Accept premises as existing. Accept buildings to be demolished upon execution of Contract with Owner. No damage or loss shall relieve Contractor from obligation to complete work under this Contract.

B. Where the work of removals, demolition, cutting and similar work involves possible hazardous substances or harmful physical agents, such as asbestos fibers, exercise extreme care to avoid damage and preserve safety of personnel. Notify Owner before making removals or cutting such material so that tests of such substances may be taken in order to ascertain whether asbestos fibers exist. Accomplish removal or cutting work involving such material by competent and qualified personnel as contracted and approved by Owner, including barriers to isolate area. Owner will pay for hazardous material removal and disposal, unless the hazardous substance or harmful physical agents have been generated or caused to be on Project by Contractor.

1.3 PROTECTION AND SAFETY

A. Execute work in a manner to prevent injury or damage to public or private property. Prevent damage from falling debris or other cause. Do not interfere with use of adjacent buildings or free, safe passage to and from same.

B. Furnish temporary sidewalks, barricades, covers and other temporary structures necessary for proper and safe conduct of work, or as required by law. Remove without additional compensation.

C. Protect trees, whenever possible, from damage. Repair injuries to bark, trunk and branches of trees by dressing, cutting and painting by skilled specialist. When so directed by Architect/Engineer (A/E), remove trees which have been injured; additional compensation will be provided by Change Order to Contract.

D. Do not drop material from great height, but lower by appropriate demolition equipment or by enclosed duct chutes. Where multi-story buildings are being demolished, enclosed chutes shall include control gates to govern flow of materials into receiving trucks. Sprinkle during demolition operations to allay dust.

E. Take precautions to prevent movement or settlement of adjacent structures, streets, walks, and similar work; provide and place adequate bracing, shoring or supports. Be responsible for complete safety of nearby buildings and assume liability for damage, movement, settlement or similar injury resulting from operations or work under contract. If safety of nearby buildings or other work appears

endangered, stop work and take corrective or preventative measures to eliminate possibilities of damage, injury, settlement or movement. Conform to instructions from Municipality regarding safety, additional precautions, additional bracing or shoring and similar protective measures. Support provisions shall be adequate and be carried to lower levels or grade as required to insure complete safety and prevent settlement.

F. Provide warning lights and other lighting as required to permit safe pedestrian traffic.

G. Exercise prudent operation with heavy equipment to prevent damage when working adjacent to existing buildings. Govern operations accordingly.

~~H. Permanently seal abandoned water wells located within the parcels being demolished. Sealing shall be as specified in Section MHD 218 of "The Water Construction Code and Amendments to Regulations Relating to the Licensing of Water Well Contractors" as adopted by the Minnesota State Board of Health, April 11, 1984.~~ ***ADD-2***

I. Use planking or other approved methods to protect sidewalks adjacent to property from damage due to demolition operations, including trucks and equipment. Repair damage to walks with equal or better materials by licensed concrete contractor.

1.4 PERMITS AND REGULATIONS

A. Review and comply with national, state and local standards and regulations including, but not limited to, pollution control standards.

B. Apply and pay for permits necessary to perform work.

PART 2 PRODUCTS

2.1 EQUIPMENT

A. Use appropriate equipment to obtain results expected, considering safety and expeditious methods and operations.

B. Use of explosives is not permitted.

PART 3 EXECUTION

3.1 RODENT AND PEST EXTERMINATION

A. Prior to demolition, rodent and pest extermination to premises and existing structure or building shall be under the control of a Contractor or subcontractor licensed by the State or Municipal Health Department or Environmental Agency having jurisdiction. ***ADD-2***

B. Proper and safe use of rodenticide shall be in accordance with manufacturer's latest printed directions and with State or Municipal laws, ordinances and regulations. During and after rodent and pest control has begun, safeguard building from unlawful entrance until certificate from the State or Municipality Health Department has certified that rodents and pest nuisances have been exterminated within structures and premises.

C. Properly dispose of dead rodents, pest nuisance, bait, poison and similar items before demolition or wrecking operations begin.

3.2 EXISTING UTILITIES AND UNDERGROUND FEATURES

A. Contact municipal authorities and utility companies with jurisdiction in the area. Have utility companies verify and locate utility lines within the construction limits prior to initiating work.

B. Seal off openings which extend beyond building ~~or property lines~~ with 12-inch concrete block and mortar. ~~Seal vertical shafts, tunnel openings and cave openings within property in same manner.~~ ***ADD-2***

C. Plug building sewers and cap other utility lines. Contact utility companies for approved methods of plugging and capping utility lines.

D. Do not start demolition until services have been cut off, sealed, capped, removed or otherwise made inoperative by Contractor or applicable Utility Company representative. Protect seals, caps, stubs or similar services to remain.

3.3 DEMOLITION

A. Remove exterior walls and foundation walls ~~to a level of 4 feet~~ below grade of adjoining ground as needed. At areas of proposed buildings or paved surfaces, remove walls and floors completely. Do not disturb or undermine adjacent private property or street right-of-way. Remove common walls supporting public sidewalks or private improvements down to sidewalk or private property grade. Do not permit wall or part thereof to fall outwardly onto public sidewalks or streets. ***ADD-2***

1. Demolish, fill with sand and seal vaults, areas, coal-holes, tunnels, trap doors or other openings located in public right-of-way adjacent to and having served the buildings being demolished. Owners of public or private utility systems still in use in vaults, areaways, coal-holes, tunnels, trapdoors or other openings will be responsible for moving or protecting same. This does not include utility vaults currently maintained by utility companies in the adjacent right-of-way area.

B. Remove on-grade slabs and those slabs up to 3 feet below grade. Treat slabs that are more than 3 feet below grade as basement slabs; they shall remain if not under new building or paved surfaces; however, break such slabs into distinct pieces which cover no more than 1 square yard apiece.

C. Remove other building walls, including interior foundation walls, partition walls, columns, piers, beams or other projections, to level of basement floor.

D. Remove driveways, sidewalks, garage slabs, entrances, private pools, patios, porch slabs, steps, retaining walls, clothes poles and bases, fences, signs, railings, bituminous surfacing and miscellaneous concrete within construction limits. This does not apply to sidewalks, driveways or signs within street rights-of-way except where specifically noted.

E. Remove underground gasoline, oil tanks and appurtenances by State approved contractor, in accordance with state guidelines and regulations.

F. Remove from basements pipes, furnaces, boilers, miscellaneous fixtures, wood, furniture, rubbish and other debris.

G. Remove supporting pads for storage tanks, fences, tanks and walls.

H. Perform other incidental and collateral work necessary to fully complete removal of building or buildings as specified.

3.4 DISPOSAL OF DEMOLISHED MATERIALS

A. As it accumulates, remove from site debris, rubbish, and other materials resulting from demolition operations. Storage or sale of removed materials will not be permitted at site.

B. Dispose of demolished materials off site at a permitted disposal facility, at no cost to Owner.

END OF SECTION

SECTION 024116
STRUCTURE DEMOLITION

Revised, Addendum #2, 09/01/2017

PART 1 - GENERAL

1.1 SUMMARY

A. This Section includes demolition and removal of the following:

1. Buildings and structures**.**
2. Site improvements including site utilities.
3. Protecting existing trees, shrubs, groundcovers, plants, and grass to remain.
4. Protecting existing utilities, ac paving, concrete paving, curb and gutters, and site lights to remain.
5. Removing existing trees, shrubs, groundcovers, plants, and grass.
6. Removing existing, curbs, gates, fences, trash cans, area drains, valves, and fire hydrants.
7. Clearing and grubbing.
8. Stripping and stockpiling topsoil.
9. Removing above- and below-grade site improvements.
10. Disconnecting and capping or sealing site utilities.
11. Temporary erosion and sedimentation control measures.

~~B. See Division 23 Sections for demolishing or relocating site mechanical items.~~ ***ADD-2***

~~C. See Division 26 Sections for demolishing or relocating site electrical items.~~ ***ADD-2***

1.2 DEFINITIONS

A. Remove: Detach items from existing construction and legally dispose of them off-site unless indicated to be removed and salvaged or recycled.

B. Remove and Salvage: Detach items from existing construction and deliver them to Owner

C. Existing to Remain: Existing items of construction that are not to be removed and that are not otherwise indicated to be removed, removed and salvaged, or recycled.

1.3 MATERIALS OWNERSHIP

A. Except for stripped topsoil or other materials indicated to remain Owner's property, cleared materials shall become Contractor's property and shall be removed from Project site.

1.4 SUBMITTALS (Not Applicable)

1.5 QUALITY ASSURANCE

A. Regulatory Requirements: Comply with governing EPA notification regulations before beginning demolition. Comply with hauling and disposal regulations of authorities having jurisdiction.

B. Standards: Comply with ANSI A10.6 and NFPA 241.

C. Predemolition Conference: Schedule conference with Owner.

1.6 PROJECT CONDITIONS

A. Buildings to be demolished will be vacated and their use discontinued before start of Work. Owner assumes no responsibility for buildings and structures to be demolished.

1. Conditions existing at time of inspection for bidding purpose will be maintained by Owner as far as practical.
2. Before building demolition, Owner will remove the following items:

    a. Owner to verify if any items need to be removed before construction commences.

B. Hazardous Materials: It is not expected that hazardous materials will be encountered in the Work.

1. Hazardous materials will be removed by Owner before start of the Work.
2. If materials suspected of containing hazardous materials are encountered, do not disturb; immediately notify Architect and Owner. Hazardous materials will be removed by Owner under a separate contract.

C. Storage or sale of removed items or materials on-site is not permitted.

D. Traffic: Minimize interference with adjoining roads, streets, walks, and other adjacent occupied or used facilities during site-clearing operations.

1. Do not close or obstruct streets, walks, or other adjacent occupied or used facilities without permission from Owner and authorities having jurisdiction.
2. Provide alternate routes around closed or obstructed traffic ways if required by authorities having jurisdiction.

E. Salvageable Improvements: Carefully remove items indicated to be salvaged and store on Owner's premises where indicated.

F. Utility Locator Service: Notify utility locator service to identify utilities for area where Project is located before site clearing.

G. Do not commence site-clearing operations until temporary erosion and sedimentation control measures are in place.

1.7 COORDINATION

A. Arrange demolition schedule so as not to interfere with on-site operations.

PART 2 - PRODUCTS (Not Applicable)

PART 3 - EXECUTION

3.1 EXAMINATION

A. Survey existing conditions and correlate with requirements indicated to determine extent of building and site demolition required.

B. Review Project Record Documents of existing construction provided by Owner. Owner does not guarantee that existing conditions are same as those indicated in Project Record Documents.

C. Inventory and record the condition of items to be removed and salvaged.

D. When unanticipated mechanical, electrical, or structural elements are encountered, investigate and measure the nature and extent of the element. Promptly submit a written report to Architect.

3.2 PREPARATION

A. Existing Utilities: Locate, identify, disconnect, and seal or cap off indicated utilities serving buildings and structures to be demolished.

1. Arrange to shut off indicated utilities with utility companies.
2. If utility services are required to be removed, relocated, or abandoned, before proceeding with building demolition provide temporary utilities that bypass buildings and structures to be demolished and that maintain continuity of service to other buildings and structures.
3. Cut off pipe or conduit a minimum of 24 inches below grade. Cap, valve, or plug and seal remaining portion of pipe or conduit after bypassing.

B. Existing Utilities: Refer to Division 23 and 26 Sections for shutting off, disconnecting, removing, and sealing or capping mechanical or electrical utilities. Do not start demolition work until utility disconnecting and sealing have been completed and verified in writing.

C. Temporary Shoring: Provide and maintain interior and exterior shoring, bracing, or structural support to preserve stability and prevent unexpected movement or collapse of construction being demolished.

D. Removed and Salvaged Items: Comply with the following:

1. Clean salvaged items of dirt and demolition debris.
2. Pack or crate items after cleaning. Identify contents of containers.
3. Store items in secure area until delivery to Owner.
4. Transport items to Owner's storage area designated by Owner.
5. Protect items from damage during transport and storage.

E. Protect and maintain benchmarks and survey control points from disturbance during construction.

F. Locate and clearly flag trees and vegetation to remain or to be relocated.

G. Protect existing site improvements to remain from damage during construction.

1. Restore damaged improvements to their original condition, as acceptable to Owner.

3.3 TEMPORARY EROSION AND SEDIMENTATION CONTROL

A. Provide temporary erosion and sedimentation control measures to prevent soil erosion and discharge of soil-bearing water runoff or airborne dust to adjacent properties and walkways, according to erosion- and sedimentation-control Drawings and requirements of authorities having jurisdiction.

B. Inspect, repair, and maintain erosion and sedimentation control measures during construction until permanent vegetation has been established.

C. Remove erosion and sedimentation controls and restore and stabilize areas disturbed during removal.

3.4 TREE PROTECTION

A. Erect and maintain temporary fencing around tree protection zones before starting site clearing. Remove fence when construction is complete.

B. Do not excavate within tree protection zones, unless otherwise indicated.

C. Repair or replace trees and vegetation indicated to remain that are damaged by construction operations, in a manner approved by Architect.

3.5 PROTECTION

A. Existing Facilities: Protect adjacent walkways, loading docks, building entries, and other building facilities during demolition operations.

B. Existing Items to Remain: Protect construction indicated to remain against damage and soiling during demolition. When permitted by Architect, items may be removed to a suitable, protected storage location during demolition and reinstalled in their original locations after demolition operations are complete.

C. Existing Utilities: Maintain utility services indicated to remain and protect them against damage during demolition operations.

1. Do not interrupt existing utilities serving adjacent occupied or operating facilities unless authorized in writing by Owner and authorities having jurisdiction.
2. Provide temporary services during interruptions to existing utilities, as acceptable to Owner and to authorities having jurisdiction.

    a. Provide at least 72 hours notice to Owner if shutdown of service is required during changeover.

D. Temporary Protection: Erect temporary protection, such as walks, fences, railings, canopies, and covered passageways, where required by authorities having jurisdiction and as indicated. Comply with requirements in Division 1 Section "Temporary Facilities and Controls."

1. Protect existing site improvements, appurtenances, and landscaping to remain.
2. Provide temporary barricades and other protection required to prevent injury to people and damage to adjacent buildings and facilities to remain.
3. Provide protection to ensure safe passage of people around building demolition area and to and from occupied portions of adjacent buildings and structures.
4. Protect walls, windows, roofs, and other adjacent exterior construction that are to remain and that are exposed to building demolition operations.

3.6 DEMOLITION, GENERAL

A. General: Demolish indicated existing buildings, structures, and site improvements completely. Use methods required to complete the Work within limitations of governing regulations and as follows:

1. Do not use cutting torches until work area is cleared of flammable materials. Maintain fire watch and portable fire-suppression devices during flame-cutting operations.
2. Maintain adequate ventilation when using cutting torches.
3. Locate building demolition equipment and remove debris and materials so as not to impose excessive loads on supporting walls, floors, or framing.

B. Engineering Surveys: Perform surveys as the Work progresses to detect hazards that may result from building demolition activities.

C. Site Access and Temporary Controls: Conduct building demolition and debris-removal operations to ensure minimum interference with roads, streets, walks, walkways, and other adjacent occupied and used facilities.

1. Do not close or obstruct streets, walks, walkways, or other adjacent occupied or used facilities without permission from Owner and authorities having jurisdiction. Provide alternate routes around closed or obstructed traffic ways if required by authorities having jurisdiction.
2. Use water mist and other suitable methods to limit spread of dust and dirt. Comply with governing environmental-protection regulations. Do not use water when it may damage adjacent construction or create hazardous or objectionable conditions, such as ice, flooding, and pollution.

3.7 MECHANICAL DEMOLITION

A. Remove buildings, structures, and site improvements intact when permitted by authorities having jurisdiction.

B. Proceed with demolition of structural framing members systematically, from higher to lower level. Complete building demolition operations above each floor or tier before disturbing supporting members on next lower level.

C. Remove debris from elevated portions by chute, hoist, or other device that will convey debris to grade level in a controlled descent.

   1. Remove structural framing members and lower to ground by method suitable to minimize ground impact or dust generation.

D. Concrete: Cut concrete full depth at junctures with construction indicated to remain.

E. Masonry: Cut masonry cleanly at junctures with construction indicated to remain.

F. Concrete Slabs-on-Grade: Saw-cut perimeter of area to be demolished at junctures with construction indicated to remain, then break up and remove.

G. Below-Grade Construction: Demolish foundation walls and other below-grade construction.

   1. Remove below-grade construction, including basements, foundation walls, and footings, completely.

H. Existing Utilities: Demolish and remove existing utilities and below-grade utility structures.

3.8 UTILITIES

A. Locate, identify, disconnect, and seal or cap off utilities indicated to be removed.

   1. Arrange with Owner to shut off indicated utilities.

B. Existing Utilities: Do not interrupt utilities serving facilities occupied by Owner or others unless permitted under the following conditions and then only after arranging to provide temporary utility services according to requirements indicated:

   1. Notify Architect not less than two days in advance of proposed utility interruptions.
   2. Do not proceed with utility interruptions without Architect's written permission.
   3. Owner will allow utility interruptions during off hours and/or on the weekends. Verify with Owner prior to commencing.

3.9 CLEARING AND GRUBBING

A. Fill depressions caused by clearing and grubbing operations with satisfactory soil material unless further excavation or earthwork is indicated.

B. Place fill material in horizontal layers not exceeding a loose depth of eight inches, and compact each layer to a density equal to adjacent original ground.

3.10 TOPSOIL STRIPPING

A. Remove sod and grass before stripping topsoil.

B. Strip topsoil to whatever depths are encountered in a manner to prevent intermingling with underlying subsoil or other waste materials.

C. Stockpile topsoil materials away from edge of excavations without intermixing with subsoil. Grade and shape stockpiles to drain surface water. Cover to prevent windblown dust.

3.11 EXPLOSIVE DEMOLITION

A. Explosives: Use of explosives is not permitted.

3.12 SITE RESTORATION

A. Below-Grade Areas: Completely fill below-grade areas and voids resulting from building demolition operations with satisfactory soil materials according to backfill requirements in Division 31 Section "Earthwork."

B. Site Grading: Uniformly rough grade area of demolished construction to a smooth surface, free from irregular surface changes. Provide a smooth transition between adjacent existing grades and new grades.

3.13 SITE IMPROVEMENTS

A. Remove existing above- and below-grade improvements as indicated and as necessary to facilitate new construction.

3.14 DISPOSAL

A. Disposal: Remove surplus soil material, unsuitable topsoil, obstructions, demolished materials, and waste materials including trash and debris, and legally dispose of them off Owner's property.

B. Separate recyclable materials produced during site clearing from other nonrecyclable materials. Store or stockpile without intermixing with other materials and transport them to recycling facilities.

3.15 REPAIRS

A. General: Promptly repair damage to adjacent construction caused by building demolition operations.

B. Where repairs to existing surfaces are required, patch to restore surface to original or better condition.

C. Restore exposed finishes of patched areas and extend restoration into adjoining construction in a manner that eliminates evidence of patching and refinishing.

3.16 RECYCLING DEMOLISHED MATERIALS

A. General: Separate recyclable demolished materials from other demolished materials to the maximum extent possible. Separate recyclable materials by type.

1. Provide containers or other storage method approved by Architect for controlling recyclable materials until they are removed from Project site.
2. Stockpile processed materials on-site without intermixing with other materials. Place, grade, and shape stockpiles to drain surface water. Cover to prevent windblown dust.
3. Stockpile materials away from demolition area. Do not store within drip line of remaining trees.
4. Store components off the ground and protect from the weather.
5. Transport recyclable materials off Owner's property and legally dispose of them.

B. Recycling Incentives: Revenues, savings, rebates, tax credits, and other incentives received for recycling building demolition materials shall accrue to Owner.

3.17 DISPOSAL OF DEMOLISHED MATERIALS

A. General: Except for items or materials indicated to be recycled**,** reused, salvaged, reinstalled, or otherwise indicated to remain Owner's property, remove demolished materials from Project site and legally dispose of them in an EPA-approved landfill.

1. Do not allow demolished materials to accumulate on-site.
2. Remove and transport debris in a manner that will prevent spillage on adjacent surfaces and areas.

B. Burning: Do not burn demolished materials.

C. Disposal: Transport demolished materials off Owner's property and legally dispose of them.

3.18 CLEANING

A. Clean adjacent structures and improvements of dust, dirt, and debris caused by building demolition operations. Return adjacent areas to condition existing before building demolition operations began.

END OF SECTION 024116

SECTION 031500
CONCRETE ACCESSORIES

Revised, Addendum #2, 09/01/2017

PART 1 GENERAL

1.1 SUMMARY

A. Section Includes:
   1. Concrete accessories and related materials for cast-in-place concrete.
   2. Coordinate Work in this Section with requirements of Section 031100 and 033000.

B. Related Sections:
   1. Section 014533.10 - Structural Testing and Special Inspections.
   2. ~~Section 032000 - Concrete Reinforcing.~~ ***ADD-2***
   3. Section 033000 - Cast-in-Place Concrete.
   4. Section 079000 - Joint Protection.

1.2 SUBMITTALS

A. Submit in accordance with Section 013300.

B. Product Data: Manufacturer's specifications, technical data including performance, construction and fabrication information.

C. Certificates: Provide a letter stating each product specified in this Section has been evaluated and found compatible with other sections.

PART 2 PRODUCTS

2.1 UNDERSLAB VAPOR BARRIERS *ADD-2*

A. (UVB-3) Under-Slab Vapor Barrier: ASTM E 1745, Class A. Permeance of less than 0.01 perms before and after mandatory conditioning tests per ASTM E 1745, Sections 7.1.1 – 7.1.5.
   1. Minimum Thickness, ACI 302: ~~15-mil~~ 10-mil
   2. Maximum Water Vapor Permeance, ASTM E 154: ~~0.01~~ 0.027 perms
   3. Minimum Tensile Strength, ASTM E 154: ~~45~~ 50 lbf/in.
   4. Puncture Resistance, ASTM D 1709: 2200 grams
   5. Manufacturers and Products:
      ~~a. Epro Services: Ecoshield E10 15~~
      b. Raven Industries: VaporBlock VB10 ~~VBLP15~~.
      c. Reef Industries: Griffolyn ~~15~~ 10 Mil Green.
      d. Stego Industries: Stego Wrap ~~15~~ Class A 10 mil.
      e. Viper: VaporCheck II ~~15~~ Class A 10 mil.
      f. W.R. Meadows: Perminator ~~15~~ 10 mil.

B. Vapor Barrier Accessories:
   1. Seam Tape: By same Manufacturer as vapor barrier, minimum width 4 inches.
      a. Water Vapor Transmission: Less than 0.3 perms per ASTM F 1249 or ASTM E 96.
   2. Pipe Boots:
      a. Construct pipe boots from vapor barrier material and pressure sensitive tape per manufacturer's instructions.
   3. Perimeter/edge seal:
      a. Stego Crete Claw by Stego Industries LLC, or comparable product by approved Manufacturers.
      b. Stego Term Bar by Stego Industries LLC, or comparable product by approved Manufacturers.
      c. StegoTack Tape (double sided) by Stego Industries LLC, or comparable product by approved Manufacturers.

2.2 EXPANSION JOINT FILLERS

A. Expansion- and Isolation-Joint-Filler Strips: ASTM D 1751, pre-molded asphalt-saturated cellulosic fiber.

B. Expansion Joint Fillers (Backing for Sealant): Flexible, compressible, closed-cell polyethylene foam, not less than 10 psi compression deflection.

2.3 WATERSTOPS

A. Self-Expanding Strip Waterstops: Manufactured rectangular or trapezoidal strip, sodium bentonite or other hydrophylic material for adhesive bonding to concrete.
   1. Available Products: Subject to compliance with requirements, products that may be incorporated into the Work include, but are not limited to, the following:
      a. Volclay Waterstop-RX; Colloid Environmental Technologies Co.
      b. Conseal CS-231; Concrete Sealants Inc.
      c. Swellseal Joint; De Neef Construction Chemicals (U.S.) Inc.
      d. Hydrotite; Greenstreak.
      e. Superstop; Progress Unlimited Inc.

B. Flexible Rubber Waterstops: Corps of Engineers CRD-C 513, for embedding in concrete to prevent passage of fluids through joints. Factory fabricate corners, intersections, and directional changes.
   1. Profile: Flat, dumbbell with center bulb.

C. Flexible PVC Waterstops: Corps of Engineers CRD-C 572, for embedding in concrete to prevent passage of fluids through joints. Factory fabricate corners, intersections, and directional changes.
   1. Profile: Ribbed, spit-flange with center bulb.

D. Chemically-Resistant Flexible Waterstops: Thermoplastic elastomer rubber waterstops, for embedding in concrete to prevent passage of fluids through joints; resistant to oils, solvents, and chemicals. Factory fabricate corners, intersections, and directional changes.
   1. Earth Shield TPE-Rubber by JP Specialties, Inc..
   2. PetroStop TPE-R by Vinylex Corp..
   3. 600 Series TPE-R by WESTEC Barrier Technologies, Inc..

E. Provide factory fabricated waterstop intersections, leaving only straight butt joint splices for the field.

2.4 INSERTS

A. Dovetail Anchor Slots: Fabricate from not less than 22 gauge galvanized steel with one inch wide back by one inch deep with 5/8 inch throat. Nail holes 4 inch o.c.
   1. Provide complete with fibrous, waterproof slot sealer or removable foam slot filler.
   2. Acceptable Manufacturers and Products:
      a. Gateway Beehive Slot.
      b. Heckman Building Products No. 100.

B. Continuous Concrete Inserts: 12 gauge minimum cold-formed galvanized or painted steel, “U” section to support 2000 pound minimum allowable point load.
   1. Acceptable Manufacturers:
      a. Cooper B-Line
      b. Unistrut

C. Wedge Type Shelf Angle Inserts: Malleable iron castings with wedge shaped holding faces to receive 5/8 inch askew head bolt.
   1. Do not use inserts complete with askew head bolts, flat washers, nuts and horseshoe shims.
   2. Acceptable Manufacturers:
      a. Dayton Superior.
      b. Gateway Building Products.

D. Expansion Sleeves: Where reinforcing extends from concrete mass to support adjacent slab, with provisions for expansion required, provide metal sleeve at each bar to permit movement.

1. Provide at stoops and elsewhere as indicated.

E. Reglets: Form reglets in concrete exposed to weather (for membranes, flashing and similar items),with removable forms (inserts). Form reglets, wedge-shaped to preserve sharp edges of concrete with twice material thickness, but not less than 3/8 inch
   1. Temporarily fill or cover face opening of reglet to prevent intrusion of concrete or debris.
   2. Do not use metal reglets, except where specifically approved.
   3. For concealed reglets use 24-gauge galvanized metal flashing reglet #307.
   4. Acceptable Manufacturers:
      a. Hohmann-Barnard.
      b. Gateway Building Products.
      c. Heckman Building Products.

F. Dowel Caps: Plastic material of size recommended for rod diameter.

G. Cast-Metal Stair Nosing: Cast iron with an integral abrasive, as-cast finish consisting of aluminum oxide, silicon carbide, or a combination of both.
   1. Fabricate units in lengths necessary to accurately fit openings or conditions.
   2. Provide anchors for embedding units in concrete, either integral or applied to units, as standard with manufacturer.
   3. Apply bituminous paint to concealed surfaces of cast-metal units set into concrete.

H. Refer to Section 055000 for embeds and other fabricated items for insertion into concrete.

2.5 FLOOR AND SLAB TREATMENTS

A. Aggregate for Slip-Resistant Finish: Aluminum oxide abrasive grits, or crushed emery with emery aggregate containing not less than 50 percent aluminum oxide and not less than 25 percent ferric oxide, factory-graded, rustproof and non-glazing, unaffected by freezing, moisture and cleaning materials.
   1. Acceptable Manufacturers and Products:
      a. Frictex by Sonneborn Building Products.
      b. Toxgrip by Toch-Carboline.
      c. Grip It by L&M Construction Chemicals.
      d. Nonslip by Euclid Chemical.

B. Pigmented Mineral-Aggregate Dry-Shake Floor Hardener: Factory-packaged dry combination of portland cement, graded quartz aggregate, coloring pigments, and plasticizing admixture. Use coloring pigments that are finely ground, nonfading mineral oxides interground with cement.
   1. Colors: Match Architect's samples.
   2. Acceptable Manufacturers and Products:
      a. Quartz Tuff; Dayton Superior Corporation.
      b. Surflex; Euclid Chemical Co.
      c. Maximent; Master Builders, Inc.
      d. Quartzplate; L&M Construction Chemicals, Inc.
      e. Quartz Floor Hardener; SpecChem, LLC

2.6 CURING AND SEALING MATERIALS

A. Manufacturers: Subject to compliance with the requirements, manufacturers offering products that may be incorporated into the Work include, but are not limited to, those listed below.

B. Evaporation Retarder: Waterborne, monomolecular film forming, manufactured for application to fresh concrete.
   1. Spray-Film; ChemMasters.
   2. Sure Film; Dayton Superior Corporation.
   3. Eucobar; Euclid Chemical Co.
   4. E-Con; L&M Construction Chemicals, Inc.
   5. SpecFilm ; SpecChem, LLC

C. Moisture-Retaining Cover: ASTM C 171, polyethylene film or white burlap-polyethylene sheet.

D. Water: Potable.

E. (CS-2) Clear, Non-yellowing, Waterborne, Membrane-Forming Curing and Sealing Compound: ASTM C 1315, Type 1, Class A, minimum 30 percent total solids. Comply with ACI 301, only for floors to remain bare or where surface treatments are compatible. Apply in accordance with manufacturer's recommendations. For floors to remain bare such as mechanical or utility rooms thoroughly clean surface and apply additional roller application just prior to project completion.
   1. Polyseal WB; ChemMasters.
   2. Vocomp-30; W. R. Meadows, Inc.
   3. Cure and Seal WB 30; SpecChem, LLC

2.7 BEARING PADS

A. Non-Slip Plastic Bearing Pads: High-density plastic bearing pads with one rough surface for placement against hardened concrete and one smooth surface to be placed against adjacent bearing pad to create a slide bearing or one-sided for support of precast concrete
   1. Minimum pad thickness: 1/4 inch.
   2. Acceptable Manufacturers and Products:
      a. Korolath of New England: NS (Non-Slip) Plastic Bearing Strips
      b. Dayton Superior: P-82 Bearing Strips

PART 3 EXECUTION

3.1 INSTALLATION

A. Install concrete accessories and related materials as specified in ~~Section 031100 - Concrete Formwork, Section 032000 - Concrete Reinforcement and~~ Section 033000 - Cast-in-Place Concrete. ***ADD-2***

END OF SECTION

SECTION 033000
CAST-IN-PLACE CONCRETE

Revised, Addendum #2, 09/01/2017

PART 1 GENERAL

1.1 RELATED DOCUMENTS

A. Drawings and general provisions of the Contract, including General and Supplementary Conditions and Division 01 Specification Sections, apply to this Section.

B. Related Section:

1. Section 031500 – Concrete Accessories. ***ADD-2***

1.2 SUMMARY

A. Section includes cast-in-place concrete, including formwork, reinforcement, concrete materials, mixture design, placement procedures, and finishes.

1.3 DEFINITIONS

A. Cementitious Materials: Portland cement alone or in combination with one or more of the following: blended hydraulic cement, fly ash and other pozzolans, ground granulated blast-furnace slag, and silica fume; subject to compliance with requirements.

B. Normal Weight Concrete: Concrete having a density of approximately 150 pcf made with gravel or crushed stone aggregates.

C. Shore: A temporary support designed to support formwork, fresh concrete, and construction loads from above for recently built structures that have not developed full design strength.

D. Strength Test: The average of the compressive strengths of two or more cylinders made from the same sample of concrete and tested at 28 days or at the specified test age.

E. Structural Lightweight Concrete: Structural concrete made with lightweight aggregate; the equilibrium density, as calculated by ASTM C 567, usually is in the range of 90 to 115 pcf with a minimum compressive strength of 2500 psi.

1.4 ACTION SUBMITTALS

A. Product Data: For each type of product indicated.

B. Design Mixtures: For each concrete mixture stamped and signed by a Civil or Structural licensed in the State of California. Submit alternate design mixtures when characteristics of materials, project conditions, weather, test results, or other circumstances warrant adjustments.

1. Indicate amounts of mixing water to be withheld for later addition at Project site.
2. Include historical strength test records if design mixture is based on field experience.

C. Steel Reinforcement Shop Drawings: Placing drawings that detail fabrication, bending, and placement. Include bar sizes, lengths, material, grade, bar schedules, stirrup spacing, bent bar diagrams, bar arrangement, splices and laps, mechanical connections, tie spacing, hoop spacing, and supports for concrete reinforcement.

1.5 INFORMATIONAL SUBMITTALS

A. Qualification Data: For Installers.

B. Welding certificates.

C. Material Certificates: For each of the following, signed by manufacturers:

1. Cementitious materials.
2. Admixtures.
3. Form materials and form-release agents.

4. Steel reinforcement and accessories.
5. Waterstops.
6. Curing compounds.
7. Floor and slab treatments.
8. Bonding agents.
9. Vapor retarders.
10. Semirigid joint filler.
11. Joint-filler strips.
12. Repair materials.

D. Material Test Reports: For the following, from a qualified Testing Agency, indicating compliance with requirements:
   1. Aggregates.

E. ICC ES Evaluation Reports: For evidence of Building Code compliance:
   1. Mechanical splices and connectors for reinforcing steel.

F. Construction Joint Layout: Indicate proposed construction joints required to construct the structure.
   1. Location of construction joints is subject to approval of the Architect

1.6 QUALITY ASSURANCE

A. Installer Qualifications: A qualified installer who employs on Project personnel qualified as ACI-certified Flatwork Technician and Finisher and a supervisor who is an ACI-certified Concrete Flatwork Technician.

B. Manufacturer Qualifications: A firm experienced in manufacturing ready-mixed concrete products and that complies with ASTM C 94/C 94M requirements for production facilities and equipment.
   1. Manufacturer certified according to NRMCA's "Certification of Ready Mixed Concrete Production Facilities."

C. Source Limitations: Obtain each type or class of cementitious material of the same brand from the same manufacturer's plant, obtain aggregate from single source, and obtain admixtures from single source from single manufacturer.

D. Welding Qualifications: Qualify procedures and personnel according to AWS D1.4/D 1.4M, "Structural Welding Code - Reinforcing Steel."

E. ACI Publications: Comply with the following unless modified by requirements in the Contract Documents:
   1. ACI 301, "Specifications for Structural Concrete," Sections 1 through 5. Sections 1 through 5 and Section 7, "Lightweight Concrete."
   2. ACI 117, "Specifications for Tolerances for Concrete Construction and Materials."

F. Concrete Testing Service: Engage a qualified independent Testing Agency to perform material evaluation tests and to design concrete mixtures.

1.7 DELIVERY, STORAGE, AND HANDLING

A. Steel Reinforcement: Deliver, store, and handle steel reinforcement to prevent bending and damage.

B. Waterstops: Store waterstops under cover to protect from moisture, sunlight, dirt, oil, and other contaminants.

PART 2 PRODUCTS

2.1 FORM-FACING MATERIALS

A. Smooth-Formed Finished Concrete: Form-facing panels that will provide continuous, true, and smooth concrete surfaces. Furnish in largest practicable sizes to minimize number of joints.
   1. Plywood, metal, or other approved panel materials.

B. Rough-Formed Finished Concrete: Plywood, lumber, metal, or another approved material. Provide lumber dressed on at least two edges and one side for tight fit.

C. Chamfer Strips: Wood, metal, PVC, or rubber strips.

D. Form-Release Agent: Commercially formulated form-release agent that will not bond with, stain, or adversely affect concrete surfaces and will not impair subsequent treatments of concrete surfaces.

E. Form Ties: Factory-fabricated, removable or snap-off metal or glass-fiber-reinforced plastic form ties designed to resist lateral pressure of fresh concrete on forms and to prevent spalling of concrete on removal.

1. Furnish units that will leave no corrodible metal closer than 1 inch to the plane of exposed concrete surface.

2.2 STEEL REINFORCEMENT

A. Recycled Content of Steel Products: Postconsumer recycled content plus one-half of preconsumer recycled content not less than 60 percent.

B. Reinforcing Bars: ASTM A 615/A 615M, Grade 60, deformed.

C. Low-Alloy-Steel Reinforcing Bars: ASTM A 706/A 706M, deformed.

D. Plain-Steel Welded Wire Reinforcement: ASTM A 185/A 185M, plain, fabricated from as-drawn steel wire into flat sheets.

2.3 REINFORCEMENT ACCESSORIES

A. Joint Dowel Bars: ASTM A 615/A 615M, Grade 60, plain-steel bars, cut true to length with ends square and free of burrs.

B. Dowel Bar Sleeves: Circular PVC sleeve, sealed one end, dowel bar embedment plus 1 inch in length, and 1/16 inch annular space inside diameter.

C. Deformed Bar Anchors: ASTM A 496, deformed steel wire; AWS D1.1/D1.1M, Type C.

D. Bar Supports: Bolsters, chairs, spacers, and other devices for spacing, supporting, and fastening reinforcing bars and welded wire reinforcement in place. Manufacture bar supports from steel wire, plastic, or precast concrete according to CRSI's "Manual of Standard Practice," of greater compressive strength than concrete and as follows:

1. For concrete surfaces exposed to view where legs of wire bar supports contact forms, use CRSI Class 1 plastic-protected steel wire or CRSI Class 2 stainless-steel bar supports.

E. Mechanical Splices and Connectors: Comply with ACI 318 and ACI 439.3, Type I and Type II.

1. Furnish splicing and connector system with current ICC ES Evaluation Report.

2.4 CONCRETE MATERIALS

A. Regional Materials: Provide concrete that has been manufactured within 500 miles of Project site from aggregates and/or cement that have been extracted, harvested, or recovered, as well as manufactured, within 500 miles of Project site.

B. Cementitious Material: Use the following cementitious materials, of the same type, brand, and source, throughout Project:

1. Portland Cement: ASTM C 150, Type I or Type II. Supplement with the following:
   a. Fly Ash: ASTM C 618, Class F or C.

C. Normal-Weight Aggregates: ASTM C 33, Class 1N coarse aggregate, well-graded. Provide aggregates from a single source.

1. Maximum Coarse Aggregate Size: 1-1/2 inches nominal.
2. Fine Aggregate: Free of materials with deleterious reactivity to alkali in cement.

D. Lightweight Aggregate: ASTM C 330, expanded shale, presize before firing, 3/4-inch nominal maximum aggregate size.

E. Water: ASTM C 94/C 94M.

2.5 ADMIXTURES

A. Air-Entraining Admixture: ASTM C 260.

B. Chemical Admixtures: Provide admixtures certified by manufacturer to be compatible with other admixtures and that will not contribute water-soluble chloride ions exceeding those permitted in hardened concrete. Do not use calcium chloride or admixtures containing calcium chloride.

1. Water-Reducing Admixture: ASTM C 494/C 494M, Type A.
2. Retarding Admixture: ASTM C 494/C 494M, Type B.
3. Water-Reducing and Retarding Admixture: ASTM C 494/C 494M, Type D.
4. High-Range, Water-Reducing Admixture: ASTM C 494/C 494M, Type F.
5. High-Range, Water-Reducing and Retarding Admixture: ASTM C 494/C 494M, Type G.

2.6 VAPOR RETARDERS

A. Sheet Vapor Retarder: ASTM E 1745, Class A, ~~15~~ 10 mil. Include manufacturer's recommended adhesive or pressure-sensitive tape. ***ADD-2***

B. Fine-Graded Granular Material: Clean mixture of crushed stone, crushed gravel, and manufactured or natural sand, at least 3 inches thick; ASTM D 448, Size 10, with 100 percent passing a 3/8-inch sieve, 10 to 30 percent passing a No. 100 sieve, and at least 5 percent passing No. 200 sieve; complying with deleterious substance limits of ASTM C 33 for fine aggregates.

2.7 FLOOR AND SLAB TREATMENTS

A. Slip-Resistive Aluminum Granule Finish: Factory-graded, packaged, rustproof, nonglazing, abrasive aggregate of not less than 95 percent fused aluminum-oxide granules.

B. Unpigmented Mineral Dry-Shake Floor Hardener: Factory-packaged dry combination of portland cement, graded quartz aggregate, and plasticizing admixture.

2.8 LIQUID FLOOR TREATMENTS

A. VOC Content: Liquid floor treatments shall have a VOC content of 200 g/L or less when calculated according to 40 CFR 59, Subpart D (EPA Method 24).

B. Penetrating Liquid Floor Treatment: Clear, chemically reactive, waterborne solution of inorganic silicate or siliconate materials and proprietary components; odorless; that penetrates, hardens, and densifies concrete surfaces.

2.9 CURING MATERIALS

A. Evaporation Retarder: Waterborne, monomolecular film forming, manufactured for application to fresh concrete.

B. Moisture-Retaining Cover: ASTM C 171, polyethylene film or white burlap-polyethylene sheet.

C. Water: Potable.

D. Clear, Waterborne, Membrane-Forming Curing Compound: ASTM C 309, Type 1, Class B, dissipating.

2.10 RELATED MATERIALS

A. Expansion- and Isolation-Joint-Filler Strips: ASTM D 1751, asphalt-saturated cellulosic fiber.

B. Semirigid Joint Filler: Two-component, semirigid, 100 percent solids, epoxy resin with a Type A shore durometer hardness of 80 per ASTM D 2240.

C. Reglets: Fabricate reglets in concrete to receive flashing from other trades of not less than 0.022-inch thick galvanized-steel sheet. See Division 07 Section “Sheet Metal Flashing and Trim”. Temporarily fill or cover face opening of reglet to prevent intrusion of concrete or debris.

2.11 REPAIR MATERIALS

A. Repair Underlayment: Cement-based, polymer-modified, self-leveling product that can be applied in thicknesses from 1/8 inch and that can be feathered at edges to match adjacent floor elevations.

1. Cement Binder: ASTM C 150, portland cement or hydraulic or blended hydraulic cement as defined in ASTM C 219.
2. Primer: Product of underlayment manufacturer recommended for substrate, conditions, and application.
3. Aggregate: Well-graded, washed gravel, 1/8 to 1/4 inch or coarse sand as recommended by underlayment manufacturer.
4. Compressive Strength: Not less than 4100 psi at 28 days when tested according to ASTM C 109/C 109M.

B. Repair Overlayment: Cement-based, polymer-modified, self-leveling product that can be applied in thicknesses from 1/4 inch and that can be filled in over a scarified surface to match adjacent floor elevations.
   1. Cement Binder: ASTM C 150, portland cement or hydraulic or blended hydraulic cement as defined in ASTM C 219.
   2. Primer: Product of topping manufacturer recommended for substrate, conditions, and application.
   3. Aggregate: Well-graded, washed gravel, 1/8 to 1/4 inch or coarse sand as recommended by topping manufacturer.
   4. Compressive Strength: Not less than 5000 psi at 28 days when tested according to ASTM C 109/C 109M.

C. Epoxy Bonding Adhesive: ASTM C 881, two-component epoxy resin, capable of humid curing and bonding to damp surfaces, of class suitable for application temperature and of grade to suit requirements, and as follows:
   1. Types IV and V, load bearing, for bonding hardened or freshly mixed concrete to hardened concrete.

2.12 CONCRETE MIXTURES, GENERAL

A. Prepare design mixtures for each type and strength of concrete, proportioned on the basis of laboratory trial mixture or field test data, or both, according to ACI 301.
   1. Use a qualified independent Testing Agency for preparing and reporting proposed mixture designs based on laboratory trial mixtures.

B. Cementitious Materials: Limit percentage, by weight, of cementitious materials other than portland cement in concrete as follows:
   1. Fly Ash: 25 percent maximum. If Fly ash is greater than 15% by weight, the mix design shall be proportioned per ACI 318 Section 5.3.

C. Limit water-soluble, chloride-ion content in hardened concrete to 1.00 percent by weight of cement.

D. Admixtures: Use admixtures according to manufacturer's written instructions.
   1. Use water-reducing admixture in concrete, as required, for placement and workability.
   2. Use water-reducing and retarding admixture when required by high temperatures, low humidity, or other adverse placement conditions.
   3. Use water-reducing admixture in pumped concrete, concrete for parking structure slabs, concrete required to be watertight, and concrete with a water-cementitious materials ratio below 0.50.

2.13 FABRICATING REINFORCEMENT

A. Fabricate steel reinforcement according to CRSI's "Manual of Standard Practice."

2.14 CONCRETE MIXING

A. Ready-Mixed Concrete: Measure, batch, mix, and deliver concrete according to ASTM C 94/C 94M, and furnish batch ticket information.
   1. When air temperature is between 85 and 90 deg F, reduce mixing and delivery time from 1-1/2 hours to 75 minutes; when air temperature is above 90 deg F, reduce mixing and delivery time to 60 minutes.

PART 3 EXECUTION

3.1 FORMWORK

A. Design, erect, shore, brace, and maintain formwork, according to ACI 301, to support vertical, lateral, static, and dynamic loads, and construction loads that might be applied, until structure can support such loads.

B. Construct formwork so concrete members and structures are of size, shape, alignment, elevation, and position indicated, within tolerance limits of ACI 117.

C. Limit concrete surface irregularities, designated by ACI 347 as abrupt or gradual, as follows:

1. Class B, 1/4 inch for rough-formed finished surfaces.

D. Construct forms tight enough to prevent loss of concrete mortar.

E. Fabricate forms for easy removal without hammering or prying against concrete surfaces. Provide crush or wrecking plates where stripping may damage cast concrete surfaces. Provide top forms for inclined surfaces steeper than 1.5 horizontal to 1 vertical.

1. Install keyways, reglets, recesses, and the like, for easy removal.
2. Do not use rust-stained steel form-facing material.

F. Set edge forms, bulkheads, and intermediate screed strips for slabs to achieve required elevations and slopes in finished concrete surfaces. Provide and secure units to support screed strips; use strike-off templates or compacting-type screeds.

G. Provide temporary openings for cleanouts and inspection ports where interior area of formwork is inaccessible. Close openings with panels tightly fitted to forms and securely braced to prevent loss of concrete mortar. Locate temporary openings in forms at inconspicuous locations.

H. Chamfer exterior corners and edges of permanently exposed concrete, unless otherwise indicated on Drawings.

I. Form openings, chases, offsets, sinkages, keyways, reglets, blocking, screeds, and bulkheads required in the Work. Determine sizes and locations from trades providing such items.

J. Clean forms and adjacent surfaces to receive concrete. Remove chips, wood, sawdust, dirt, and other debris just before placing concrete.

K. Retighten forms and bracing before placing concrete, as required, to prevent mortar leaks and maintain proper alignment.

L. Coat contact surfaces of forms with form-release agent, according to manufacturer's written instructions, before placing reinforcement.

3.2 EMBEDDED ITEMS

A. Place and secure anchorage devices and other embedded items required for adjoining work that is attached to or supported by cast-in-place concrete. Use setting drawings, templates, diagrams, instructions, and directions furnished with items to be embedded.

1. Install anchor rods, accurately located, to elevations required and complying with tolerances in Section 7.5 of AISC's "Code of Standard Practice for Steel Buildings and Bridges."
2. Install reglets to receive waterproofing and to receive through-wall flashings in outer face of concrete frame at exterior walls, where flashing is shown at lintels, shelf angles, and other conditions.
3. Install dovetail anchor slots in concrete structures as indicated.

3.3 REMOVING AND REUSING FORMS

A. General: Formwork for sides of beams, walls, columns, and similar parts of the Work that does not support weight of concrete may be removed after cumulatively curing at not less than 50 deg F for 24 hours after placing concrete. Concrete has to be hard enough to not be damaged by form-removal operations and curing and protection operations need to be maintained.

1. Leave formwork for beam soffits, joists, slabs, and other structural elements that supports weight of concrete in place until concrete has achieved its 28-day design compressive strength.

2. Remove forms only if shores have been arranged to permit removal of forms without loosening or disturbing shores.

B. Clean and repair surfaces of forms to be reused in the Work. Split, frayed, delaminated, or otherwise damaged form-facing material will not be acceptable for exposed surfaces. Apply new form-release agent.

C. When forms are reused, clean surfaces, remove fins and laitance, and tighten to close joints. Align and secure joints to avoid offsets. Do not use patched forms for exposed concrete surfaces unless approved by Architect.

3.4 VAPOR RETARDERS

A. Sheet Vapor Retarders: Place, protect, and repair sheet vapor retarder according to ASTM E 1643 and manufacturer's written instructions.

1. Lap joints 6 inches and seal with manufacturer's recommended tape.

B. Granular Course: Cover vapor retarder with fine-graded granular material, moisten, and compact with mechanical equipment to elevation tolerances of plus 0 inch or minus 3/4 inch.

3.5 STEEL REINFORCEMENT

A. General: Comply with CRSI's "Manual of Standard Practice" for placing reinforcement.

1. Do not cut or puncture vapor retarder. Repair damage and reseal vapor retarder before placing concrete.

B. Clean reinforcement of loose rust and mill scale, earth, ice, and other foreign materials that would reduce bond to concrete.

C. Accurately position, support, and secure reinforcement against displacement. Locate and support reinforcement with bar supports to maintain minimum concrete cover. Do not tack weld crossing reinforcing bars.

1. Weld reinforcing bars according to AWS D1.4/D 1.4M, where indicated.

D. Set wire ties with ends directed into concrete, not toward exposed concrete surfaces.

E. Install welded wire reinforcement in longest practicable lengths on bar supports spaced to minimize sagging. Lap edges and ends of adjoining sheets at least one mesh spacing. Offset laps of adjoining sheet widths to prevent continuous laps in either direction. Lace overlaps with wire.

3.6 JOINTS

A. General: Construct joints true to line with faces perpendicular to surface plane of concrete.

B. Construction Joints: Install so strength and appearance of concrete are not impaired, at locations indicated or as approved by Architect.

1. Place joints perpendicular to main reinforcement. Continue reinforcement across construction joints unless otherwise indicated.
2. Form keyed joints as indicated. Embed keys at least 1-1/2 inches into concrete.
3. Locate horizontal joints in walls and columns at underside of floors, slabs, beams, and girders and at the top of footings or floor slabs.

C. Contraction Joints in Slabs-on-Grade: Form weakened-plane contraction joints, sectioning concrete into areas as indicated. Construct contraction joints for a depth equal to at least one-fourth of concrete thickness as follows:

1. Grooved Joints: Form contraction joints after initial floating by grooving and finishing each edge of joint to a radius of 1/8 inch. Repeat grooving of contraction joints after applying surface finishes. Eliminate groover tool marks on concrete surfaces.
2. Sawed Joints: Form contraction joints with power saws equipped with shatterproof abrasive or diamond-rimmed blades. Cut 1/8-inch- wide joints into concrete when cutting action will not tear, abrade, or otherwise damage surface and before concrete develops random contraction cracks.

D. Doweled Joints: Install dowel bars and support assemblies at joints where indicated. Lubricate or asphalt coat one-half of dowel length to prevent concrete bonding to one side of joint or use PVC dowel bar sleeve.

3.7 CONCRETE PLACEMENT

A. Before placing concrete, verify that installation of formwork, reinforcement, and embedded items is complete and that required inspections have been performed.

B. Before test sampling and placing concrete, water may be added at Project site, subject to limitations of ACI 301.

1. Do not add water to concrete after adding high-range water-reducing admixtures to mixture.

C. Deposit concrete continuously in one layer or in horizontal layers of such thickness that no new concrete will be placed on concrete that has hardened enough to cause seams or planes of weakness. If a section cannot be placed continuously, provide construction joints as indicated. Deposit concrete to avoid segregation.

1. Deposit concrete in horizontal layers of depth to not exceed formwork design pressures and in a manner to avoid inclined construction joints.
2. Consolidate placed concrete with mechanical vibrating equipment according to ACI 301.
3. Do not use vibrators to transport concrete inside forms. Insert and withdraw vibrators vertically at uniformly spaced locations to rapidly penetrate placed layer and at least 6 inches into preceding layer. Do not insert vibrators into lower layers of concrete that have begun to lose plasticity. At each insertion, limit duration of vibration to time necessary to consolidate concrete and complete embedment of reinforcement and other embedded items without causing mixture constituents to segregate.

D. Deposit and consolidate concrete for floors and slabs in a continuous operation, within limits of construction joints, until placement of a panel or section is complete.

1. Consolidate concrete during placement operations so concrete is thoroughly worked around reinforcement and other embedded items and into corners.
2. Maintain reinforcement in position on chairs during concrete placement.
3. Screed slab surfaces with a straightedge and strike off to correct elevations.
4. Slope surfaces uniformly to drains where required.
5. Begin initial floating using bull floats or darbies to form a uniform and open-textured surface plane, before excess bleedwater appears on the surface. Do not further disturb slab surfaces before starting finishing operations.

E. Cold-Weather Placement: Comply with ACI 306.1 and as follows. Protect concrete work from physical damage or reduced strength that could be caused by frost, freezing actions, or low temperatures.

1. When average high and low temperature is expected to fall below 40 deg F for three successive days, maintain delivered concrete mixture temperature within the temperature range required by ACI 301.
2. Do not use frozen materials or materials containing ice or snow. Do not place concrete on frozen subgrade or on subgrade containing frozen materials.
3. Do not use calcium chloride, salt, or other materials containing antifreeze agents or chemical accelerators unless otherwise specified and approved in mixture designs.

F. Hot-Weather Placement: Comply with ACI 301 and as follows:

1. Maintain concrete temperature below 90 deg F at time of placement. Chilled mixing water or chopped ice may be used to control temperature, provided water equivalent of ice is calculated to total amount of mixing water. Using liquid nitrogen to cool concrete is Contractor's option.
2. Fog-spray forms, steel reinforcement, and subgrade just before placing concrete. Keep subgrade uniformly moist without standing water, soft spots, or dry areas.

3.8 FINISHING FORMED SURFACES

A. Rough-Formed Finish: As-cast concrete texture imparted by form-facing material with tie holes and defects repaired and patched. Remove fins and other projections that exceed specified limits on formed-surface irregularities.

1. Apply to concrete surfaces not exposed to view.

B. Related Unformed Surfaces: At tops of walls, horizontal offsets, and similar unformed surfaces adjacent to formed surfaces, strike off smooth and finish with a texture matching adjacent formed surfaces. Continue final surface treatment of formed surfaces uniformly across adjacent unformed surfaces unless otherwise indicated.

3.9 FINISHING FLOORS AND SLABS

A. General: Comply with ACI 302.1R recommendations for screeding, restraightening, and finishing operations for concrete surfaces. Do not wet concrete surfaces.

B. Float Finish: Consolidate surface with power-driven floats or by hand floating if area is small or inaccessible to power driven floats. Restraighten, cut down high spots, and fill low spots. Repeat float passes and restraightening until surface is left with a uniform, smooth, granular texture.

1. Apply float finish to surfaces to receive trowel finish and to be covered with fluid-applied or sheet waterproofing, or built-up or membrane roofing.

C. Trowel Finish: After applying float finish, apply first troweling and consolidate concrete by hand or power-driven trowel. Continue troweling passes and restraighten until surface is free of trowel marks and uniform in texture and appearance. Grind smooth any surface defects that would telegraph through applied coatings or floor coverings.

1. Apply a trowel finish to surfaces exposed to view or to be covered with resilient flooring, carpet, ceramic or quarry tile set over a cleavage membrane, paint, or another thin-film-finish coating system.
2. Finish surfaces to the following tolerances, according to ASTM E 1155, for a randomly trafficked floor surface:
    a. Specified overall values (SOV) of flatness, F(F) 25; and of levelness, F(L) 20; with minimum local values (MLV) of flatness, F(F) 17; and of levelness, F(L) 15.
    b. Specified overall values (SOV) of flatness, F(F) 35; and of levelness, F(L) 25; with minimum local values (MLV) of flatness, F(F) 24; and of levelness, F(L) 17; for surfaces to receive thin-set flooring.
3. For floor installations 10,000 sq. ft. or less in total project area, finish and measure surface so gap at any point between concrete surface and an unleveled, freestanding, 10-ft. long straightedge resting on two high spots and placed anywhere on the surface does not exceed 1/4 inch (90 percent compliance) in accordance to ACI 117 Section 4.8.

D. Trowel and Fine-Broom Finish: Apply a first trowel finish to surfaces where ceramic or quarry tile is to be installed by either thickset or thin-set method. While concrete is still plastic, slightly scarify surface with a fine broom.

1. Comply with flatness and levelness tolerances for trowel-finished floor surfaces.

E. Broom Finish: Apply a broom finish to exterior concrete platforms, steps, ramps, and elsewhere as indicated.

1. Immediately after float finishing, slightly roughen trafficked surface by brooming with fiber-bristle broom perpendicular to main traffic route. Coordinate required final finish with Architect before application.

F. Slip-Resistive Finish: Before final floating, apply slip-resistive aluminum granule finish where indicated and to concrete stair treads, platforms, and ramps. Apply according to manufacturer's written instructions and as follows:

1. Uniformly spread 25 lb/100 sq. ft. of dampened slip-resistive aluminum granules over surface in one or two applications. Tamp aggregate flush with surface, but do not force below surface.
2. After broadcasting and tamping, apply float finish.
3. After curing, lightly work surface with a steel wire brush or an abrasive stone and water to expose slip-resistive aluminum granules.

G. Dry-Shake Floor Hardener Finish: After initial floating, apply dry-shake floor hardener to surfaces according to manufacturer's written instructions and as follows:

1. Uniformly apply dry-shake floor hardener at a rate of 100 lb/100 sq. ft. unless greater amount is recommended by manufacturer.

2. Uniformly distribute approximately two-thirds of dry-shake floor hardener over surface by hand or with mechanical spreader, and embed by power floating. Follow power floating with a second dry-shake floor hardener application, uniformly distributing remainder of material, and embed by power floating.
3. After final floating, apply a trowel finish. Cure concrete with curing compound recommended by dry-shake floor hardener manufacturer and apply immediately after final finishing.

3.10 MISCELLANEOUS CONCRETE ITEMS

A. Filling In: Fill in holes and openings left in concrete structures after work of other trades is in place unless otherwise indicated. Mix, place, and cure concrete, as specified, to blend with in-place construction. Provide other miscellaneous concrete filling indicated or required to complete the Work.

B. Curbs: Provide monolithic finish to interior curbs by stripping forms while concrete is still green and by steel-troweling surfaces to a hard, dense finish with corners, intersections, and terminations slightly rounded.

C. Equipment Bases and Foundations: Provide machine and equipment bases and foundations as shown on Drawings. Set anchor bolts for machines and equipment at correct elevations, complying with diagrams or templates from manufacturer furnishing machines and equipment.

3.11 CONCRETE PROTECTING AND CURING

A. General: Protect freshly placed concrete from premature drying and excessive cold or hot temperatures. Comply with ACI 306.1 for cold-weather protection and ACI 301 for hot-weather protection during curing.

B. Evaporation Retarder: Apply evaporation retarder to unformed concrete surfaces if hot, dry, or windy conditions cause moisture loss approaching 0.2 lb/sq. ft. x h before and during finishing operations. Apply according to manufacturer's written instructions after placing, screeding, and bull floating or darbying concrete, but before float finishing.

C. Formed Surfaces: Cure formed concrete surfaces, including underside of beams, supported slabs, and other similar surfaces. If forms remain during curing period, moist cure after loosening forms. If removing forms before end of curing period, continue curing for the remainder of the curing period.

D. Unformed Surfaces: Begin curing immediately after finishing concrete. Cure unformed surfaces, including floors and slabs, concrete floor toppings, and other surfaces.

E. Cure concrete according to ACI 308.1, by one or a combination of the following methods:
   1. Moisture Curing: Keep surfaces continuously moist for not less than seven days with the following materials:
      a. Water.
      b. Continuous water-fog spray.
      c. Absorptive cover, water saturated, and kept continuously wet. Cover concrete surfaces and edges with 12-inch lap over adjacent absorptive covers.
   2. Moisture-Retaining-Cover Curing: Cover concrete surfaces with moisture-retaining cover for curing concrete, placed in widest practicable width, with sides and ends lapped at least 12 inches, and sealed by waterproof tape or adhesive. Cure for not less than seven days. Immediately repair any holes or tears during curing period using cover material and waterproof tape.
      a. Moisture cure or use moisture-retaining covers to cure concrete surfaces to receive floor coverings.
      b. Moisture cure or use moisture-retaining covers to cure concrete surfaces to receive penetrating liquid floor treatments.
      c. Cure concrete surfaces to receive floor coverings with either a moisture-retaining cover or a curing compound that the manufacturer certifies will not interfere with bonding of floor covering used on Project.
   3. Curing Compound: Apply uniformly in continuous operation by power spray or roller according to manufacturer's written instructions. Recoat areas subjected to heavy rainfall within three

hours after initial application. Maintain continuity of coating and repair damage during curing period.

a. Removal: After curing period has elapsed, remove curing compound without damaging concrete surfaces by method recommended by curing compound manufacturer unless manufacturer certifies curing compound will not interfere with bonding of floor covering used on Project.

3.12 LIQUID FLOOR TREATMENTS

A. Penetrating Liquid Floor Treatment: Prepare, apply, and finish penetrating liquid floor treatment according to manufacturer's written instructions.

1. Remove curing compounds, sealers, oil, dirt, laitance, and other contaminants and complete surface repairs.
2. Do not apply liquid to concrete sooner than that recommended by manufacturer.
3. Apply liquid until surface is saturated, scrubbing into surface until a gel forms; rewet; and repeat brooming or scrubbing. Rinse with water; remove excess material until surface is dry. Apply a second coat in a similar manner if surface is rough or porous.

3.13 JOINT FILLING

A. Prepare, clean, and install joint filler according to manufacturer's written instructions.

1. Defer joint filling until concrete has aged at least six months. Do not fill joints until construction traffic has permanently ceased.

B. Remove dirt, debris, saw cuttings, curing compounds, and sealers from joints; leave contact faces of joint clean and dry.

C. Install semirigid joint filler full depth in saw-cut joints and at least 2 inches deep in formed joints. Overfill joint and trim joint filler flush with top of joint after hardening.

3.14 CONCRETE SURFACE REPAIRS

A. Defective Concrete: Repair and patch defective areas when approved by Architect. Remove and replace concrete that cannot be repaired and patched to Architect's approval.

B. Patching Mortar: Mix dry-pack patching mortar, consisting of one part portland cement to two and one-half parts fine aggregate passing a No. 16 sieve, using only enough water for handling and placing.

C. Repairing Formed Surfaces: Surface defects include color and texture irregularities, cracks, spalls, air bubbles, honeycombs, rock pockets, fins and other projections on the surface, and stains and other discolorations that cannot be removed by cleaning.

1. Immediately after form removal, cut out honeycombs, rock pockets, and voids more than 1/2 inch in any dimension to solid concrete. Limit cut depth to 3/4 inch. Make edges of cuts perpendicular to concrete surface. Clean, dampen with water, and brush-coat holes and voids with bonding agent. Fill and compact with patching mortar before bonding agent has dried. Fill form-tie voids with patching mortar or cone plugs secured in place with bonding agent.
2. Repair defects on surfaces exposed to view by blending white portland cement and standard portland cement so that, when dry, patching mortar will match surrounding color. Patch a test area at inconspicuous locations to verify mixture and color match before proceeding with patching. Compact mortar in place and strike off slightly higher than surrounding surface.
3. Repair defects on concealed formed surfaces that affect concrete's durability and structural performance as determined by Architect.
4. Repair technique shall be tested on a mockup or surface to be concealed later, before repairing surfaces exposed to view, for approval by Architect.

D. Repairing Unformed Surfaces: Test unformed surfaces, such as floors and slabs, for finish and verify surface tolerances specified for each surface. Correct low and high areas. Test surfaces sloped to drain for trueness of slope and smoothness; use a sloped template.

1. Repair finished surfaces containing defects. Surface defects include spalls, popouts, honeycombs, rock pockets, crazing and cracks in excess of 0.01 inch wide or that penetrate to

reinforcement or completely through unreinforced sections regardless of width, and other objectionable conditions.

2. After concrete has cured at least 14 days, correct high areas by grinding.
3. Correct localized low areas during or immediately after completing surface finishing operations by cutting out low areas and replacing with patching mortar. Finish repaired areas to blend into adjacent concrete.
4. Correct other low areas scheduled to receive floor coverings with a repair underlayment. Prepare, mix, and apply repair underlayment and primer according to manufacturer's written instructions to produce a smooth, uniform, plane, and level surface. Feather edges to match adjacent floor elevations.
5. Correct other low areas scheduled to remain exposed with a repair topping. Cut out low areas to ensure a minimum repair topping depth of 1/4 inch to match adjacent floor elevations. Prepare, mix, and apply repair topping and primer according to manufacturer's written instructions to produce a smooth, uniform, plane, and level surface.
6. Repair defective areas, except random cracks and single holes 1 inch or less in diameter, by cutting out and replacing with fresh concrete. Remove defective areas with clean, square cuts and expose steel reinforcement with at least a 3/4-inch clearance all around. Dampen concrete surfaces in contact with patching concrete and apply bonding agent. Mix patching concrete of same materials and mixture as original concrete except without coarse aggregate. Place, compact, and finish to blend with adjacent finished concrete. Cure in same manner as adjacent concrete.
7. Repair random cracks and single holes 1 inch or less in diameter with patching mortar. Groove top of cracks and cut out holes to sound concrete and clean off dust, dirt, and loose particles. Dampen cleaned concrete surfaces and apply bonding agent. Place patching mortar before bonding agent has dried. Compact patching mortar and finish to match adjacent concrete. Keep patched area continuously moist for at least 72 hours.

E. Perform structural repairs of concrete, subject to Architect's approval, using epoxy adhesive and patching mortar.

F. Repair materials and installation not specified above may be used, subject to Architect's approval.

3.15 FIELD QUALITY CONTROL

A. Testing and Inspecting: Owner will engage a qualified Testing Agency to perform field tests and inspections and prepare test reports.

B. Inspections: Verify and inspect concrete Work as shown on Drawings.

C. Concrete Tests: Testing of composite samples of fresh concrete obtained according to ASTM C 172 shall be performed according to the following requirements:

1. Testing Frequency: Obtain at least one composite sample for each 50 cu. yd. of concrete, or for each 2000 sq. ft of surface area of slabs or walls thereof of each concrete mixture placed each day. Additional samples for 7-day tests shall be taken for each type of concrete at the beginning of the concrete work or whenever the mix or aggregate is changed.
   a. When frequency of testing will provide fewer than five compressive-strength tests for each concrete mixture, testing shall be conducted from at least five randomly selected batches or from each batch if fewer than five are used.
2. Slump: ASTM C 143/C 143M; one test at point of placement for each composite sample, but not less than one test for each day's pour of each concrete mixture. Perform additional tests when concrete consistency appears to change.
3. Air Content: ASTM C 231, pressure method, for normal-weight concrete; ASTM C 173/C 173M, volumetric method, for structural lightweight concrete; one test for each composite sample, but not less than one test for each day's pour of each concrete mixture.
4. Concrete Temperature: ASTM C 1064/C 1064M; one test hourly when air temperature is 40 deg F and below and when 80 deg F and above, and one test for each composite sample.
5. Unit Weight: ASTM C 567, fresh unit weight of structural lightweight concrete; one test for each composite sample, but not less than one test for each day's pour of each concrete mixture.
6. Compression Test Specimens: ASTM C 31/C 31M.
   a. Cast and laboratory cure two sets of two standard cylinder plus one spare standard cylinder specimens for each composite sample.

b. To verify concrete strength for removal of shoring and reshoring in multistory construction, cast and field cure sets of two standard cylinder specimens for each composite sample. Number of field cured sets to be determined by Contractor.

7. Compressive-Strength Tests: ASTM C 39/C 39M; test one set of two laboratory-cured specimens at 7 days and one set of two specimens at 28 days.
   a. A compressive-strength test shall be the average compressive strength from a set of two specimens obtained from same composite sample and tested at age indicated.
8. Strength of each concrete mixture will be satisfactory if every average of any three consecutive compressive-strength tests equals or exceeds specified compressive strength and no compressive-strength test value falls below specified compressive strength by more than 500 psi.
   a. If 28-day compressive-strength test falls below satisfactory levels, strength test the spare cylinder at age determined by the Contractor and average with the strength of the 28-day specimens. The average strength of the three cylinders shall be considered one compressive-strength test.
9. Test results shall be reported in writing to Architect, concrete manufacturer, and Contractor within 48 hours of testing. Reports of compressive-strength tests shall contain Project identification name and number, date of concrete placement, name of concrete Testing Agency, location of concrete batch in Work, design compressive strength at 28 days, concrete mixture proportions and materials, compressive breaking strength, and type of break for both 7- and 28-day tests.
10. Nondestructive Testing: Impact hammer, sonoscope, or other nondestructive device may be permitted by Architect but will not be used as sole basis for approval or rejection of concrete.
11. Additional Tests: Testing Agency shall make additional tests of concrete when test results indicate that slump, air entrainment, compressive strengths, or other requirements have not been met, as directed by Architect. Testing Agency may conduct tests to determine adequacy of concrete by cored cylinders complying with ASTM C 42/C 42M or by other methods as directed by Architect.
12. Additional testing and inspecting, at Contractor's expense, will be performed to determine compliance of replaced or additional work with specified requirements.
13. Correct deficiencies in the Work that test reports and inspections indicate do not comply with the Contract Documents.

D. Measure floor and slab flatness and levelness according to within 24 hours of finishing.

3.16 PROTECTION OF LIQUID FLOOR TREATMENTS

A. Protect liquid floor treatment from damage and wear during the remainder of construction period. Use protective methods and materials, including temporary covering, recommended in writing by liquid floor treatments installer.

END OF SECTION

SECTION 042000
UNIT MASONRY

Revised, Addendum #2, 09/01/2017

PART 1 GENERAL

1.1 SUMMARY

A. Section Includes:

1. Concrete masonry units.
2. Burnished concrete masonry units
3. Installation of reinforcing bars and deformed bar anchors in unit masonry.
4. Installation of anchor bolts and other embedments in unit masonry
5. Installation of masonry anchorage, reinforcing and accessories specified in Section 040520.
6. Graffiti coating. ***ADD-2***

B. Related Sections:

1. Section 033000 - Cast-In-Place Concrete.
2. Section 040516 - Masonry Mortaring and Grouting.
3. Section 040520 - Masonry Anchorage, Reinforcing and Accessories.
4. Section 051200 - Structural Steel: Items to be built in masonry work.
5. Section 055000 - Metal Fabrications: Items to be built in masonry work.
6. Section 072100 - Thermal Insulation: For cavity spaces.
7. Section 076210 – Sheet Metal Flashing and Trim: Reglets to be built in masonry work.
8. Section 079000 - Joint Protection: Sealants for expansion and contraction joints.

1.2 REFERENCES

A. ANSI A41.1 - Building Code Requirements for Masonry.

B. ACI 530.1/ASCE 6 - Specifications for Masonry Structures.

1.3 SUBMITTALS

A. Product Data and Test Reports: Submit manufacturer's recommendations, product data and test reports in accordance with this section and Section 013300.

B. Shop Drawings: Submit in accordance with Section 013300 for stone trim in form of cutting and setting drawings showing sizes, profiles, and location of each stone trim unit required.

C. Samples: Submit samples of each type of unit masonry for color selection and appearance acceptance.

1. Burnished concrete unit masonry.

1.4 QUALITY ASSURANCE

A. Reference Standards: Comply with requirements of listed standards unless indicated otherwise herein.

B. Fire-Rated Masonry: Wherever fire-resistance classification is shown or scheduled for unit masonry construction, comply with requirements for materials and installation established by governing authorities for construction shown.

C. Test Data: Provide evidence and test data confirming that concrete block conform to standards stated herein.

D. Single Source Responsibility for Masonry Units: Obtain exposed masonry units of uniform texture and color, or uniform blend within ranges accepted for these characteristics, from one manufacturer for each different product required for each continuous surface or visually related surfaces.

E. Job Mock-Up: Prior to installation of masonry work, erect sample wall panel mock-up using materials, bond and joint tooling required for final work.

1. Build mock-up at site, where directed, of full thickness and approximately 4 feet by 4 feet, indicating proposed range of color, texture and workmanship to be expected in completed work.
2. Architect's acceptance of visual qualities of mock-up before start of masonry work. Provide separate mock-up panel for each type of exposed unit masonry work.
3. Where masonry is to match existing, erect panels parallel to existing surface.
4. Mock-up to show following assemblies as part of masonry construction.
   a. Back-up wall, ties, insulation, vapor retarder
   b. Building corner
   c. Sealant joints
   d. Window opening with vapor retarder terminations shown.

1.5 TESTING

A. Testing of Concrete Masonry Units:
   1. Tentative Acceptance: For tentative acceptance of blocks provide tests and reports on minimum of 5 units, from current stock, to provide proof of ability to conform to ASTM Standards. Texture, dimension, tolerance, appearance and test reports will be basis for tentative acceptance of supplier of blocks.

B. Prism Testing:
   1. F'm-1500 psi unless noted otherwise on drawings.
   2. Compressive strength of masonry assembly (f'm) may be determined by one of the following methods:
      a. Provide compressive strength of masonry units to achieve required F'm per CBC Table 2105.2.2.1.2 for Type 'M' or 'S' mortars.
      b. Prism testing per CBC 2105.2.2.2 and ASTM C1314.
         1) Prior to construction, notify Architect in writing of method to be used.
         2) When prism testing is used to determine F'm, construct and test not less than 3 prisms prior to construction for each strength specified.

C. Mortar strength test in accordance with ASTM C780.

D. Graffiti Coating Testing: ***ADD-2***
   1. Test a minimum 4 ft. by 4 ft. area on each type of masonry. Use the manufacturer's application instructions. Let test area protective treatment cure before inspection. Keep test panels available for comparison throughout the protective treatment project.

1.6 MASONRY TO STEEL STUD TIE TESTING

A. Owner will retain and pay for ITL (Independent Testing Laboratory) to perform pull out testing on masonry anchors attached to steel studs.

B. Type of testing equipment shall be hydraulic or other testing apparatus as determined by ITL.

C. Provide ITL with description of materials and installation procedures and methods.

D. Perform field testing (use approximately 150 lbs per tie) on selected area of 20 square feet of installed masonry anchors at start of anchor installation. Test area shall represent same materials and methods utilized for remainder of project.

E. If required by testing results, adjust materials or methods to obtain secure masonry anchor attachment.

F. After adjustment, if necessary, masonry anchor testing on remainder of project shall be accomplished on indiscriminate basis as determined by ITL, testing one anchor out of approximately 150 installed anchors.

G. Exact testing program, pattern and procedure to be used will be established by ITL with change of test procedure and additional testing as determined by ITL.

1.7 APPEARANCE OF CONCRETE MASONRY UNITS

A. Appearance Requirements: Concrete masonry units shall be light in color, with uniform fine texture, free of face smears.

1. Do not use broken units. Chipped or other defective units will not be acceptable for use where exposed. Not over 5 percent of units will be permitted to have chips and chips shall not exceed 3/8 inch.
2. Exposed concrete masonry unit walls shall have units uniform in size, texture and color.
3. Architect reserves the right to reject unit masonry manufacturer if, in Architect's opinion, unit quality, color or texture is unacceptable with design intent.
4. Appearance requirements may be waived by Architect for concealed units.

1.8 DELIVERY, STORAGE AND HANDLING

A. Deliver masonry materials to project in undamaged condition.

B. Store and handle masonry units off ground, under cover, and in dry location to prevent their deterioration or damage due to moisture, temperature changes, contaminants, corrosion, and other causes. If units become wet, do not place until units are in air-dried condition.

C. Store cementitious materials off ground, under cover, and in dry location.

D. Store aggregates where grading and other required characteristics can be maintained and contamination avoided.

E. Store masonry accessories including metal items to prevent corrosion and accumulation of dirt and oil.

1.9 PROJECT CONDITIONS

A. Protection of Masonry: During construction, cover tops of walls, projections, and sills with waterproof sheeting at end of each day's work. Cover partially completed masonry when construction is not in progress.
   1. Extend cover a minimum of 48 inches down both sides and hold cover securely in place.
   2. Where one wythe of multiwythe masonry walls is completed in advance of other wythes, secure cover a minimum of 48 inches down face next to unconstructed wythe and hold cover in place.
   3. Maintain protective boards at exposed external corners which may be damaged by construction activities. Provide such protection without damaging completed work.
   4. Protect sills, ledges and projections from droppings of mortar.

B. Do not apply uniform floor or roof loads for at least 12 hours and concentrated loads for at least 3 days after building masonry walls or columns.

C. Stain Prevention: Prevent grout, mortar, and soil from staining the face of masonry to be left exposed or painted. Immediately remove grout, mortar, and soil that come in contact with such masonry.
   1. Protect base of walls from rain-splashed mud and from mortar splatter by coverings spread on ground and over wall surface.
   2. Protect sills, ledges, and projections from mortar droppings.
   3. Protect surfaces of window and door frames, as well as similar products with painted and integral finishes, from mortar droppings.
   4. Turn scaffold boards near the wall on edge at the end of each day to prevent rain from splashing mortar and dirt onto completed masonry.

D. Cold-Weather Requirements: Do not use frozen materials or materials mixed or coated with ice or frost. Do not build on frozen substrates. Remove and replace unit masonry damaged by frost or by freezing conditions. Comply with cold-weather construction requirements contained in ACI 530.1/ASCE 6/TMS 602.
   1. Cold-Weather Cleaning: Use liquid cleaning methods only when air temperature is 40 deg and above and will remain so until masonry has dried, but not less than 7 days after completing cleaning.

E. Hot-Weather Requirements: Protect unit masonry work when temperature and humidity conditions produce excessive evaporation of water from mortar and grout. Provide artificial shade and wind breaks and use cooled materials as required.

1. When ambient temperature exceeds 90 deg F with a wind velocity greater than 8 mph, do not spread mortar beds more than 48 inches ahead of masonry. Set masonry units within one minute of spreading mortar.

1.10 PROTECTION

A. Provide temporary bracing during erection of concrete block work. Maintain in place until building structure provides permanent bracing.

B. Heat materials and provide temporary protection of completed portions of masonry work. Comply with governing codes and with "Construction and Protection Recommendations for Cold Weather Masonry Construction" of Technical Notes on Brick and Tile Construction by Brick Institute of America (BIA). Extend covering at least 2 feet down both sides of walls and hold securely in place.

C. Prevent mortar or soil from staining face of masonry to be left exposed or painted. Remove immediately mortar in contact with such masonry. Protect base of walls from rain-splashed mud and mortar splatter by means of coverings spread on ground and over wall surface.

D. Protect sills, ledges and projections from droppings of mortar.

PART 2 PRODUCTS

2.1 CONCRETE UNIT MASONRY

A. Concrete Blocks: Modular size, load bearing, ASTM C90.
   1. (CMU-1) Normal weight Class 1: C33 Aggregate. Unless concrete block is indicated as "light weight block", provide normal weight concrete block.
      a. Size:
         1) Nominal, as indicated.

B. Provide shapes indicated and as follows:
   1. Provide special shapes for lintels, corners, jambs, sash, control joints, headers, bonding, and other special conditions.
   2. Provide square-edged units for outside corners, unless indicated as bullnose.

C. Curing: Kiln and air cured under cover until age of blocks is at least 45 days. Autoclave cured type block may be used.

2.2 DECORATIVE CONCRETE MASONRY UNITS

A. (CMU-11) and (CMU-12) Ground Faced (Burnished) Concrete Masonry Units: ASTM C90, normal weight units (minimum 125 pcf), moisture controlled curing, with manufacturer's standard dissipating block protection.
   1. Load Bearing Unit Shapes: All units (excluding lintel, cap and sill block units) to be Plain Double Corner; Single Open End, ("A" shaped); or Double Open End, ("H" shaped) units.
   2. Type: Provide special shapes where indicated on the Drawings
   3. Sizes:
      a. (CMU-11): Nominal 4" x 8" x 16" at all Site walls and Generator Enclosure wall.
      b. (CMU-12): Nominal 4" x 12" x 16" at Greenhouse foundation wall.
   4. Colors: Refer to Material Identification Codes.
   5. Acceptable manufacturer:
      a. ORCO Block Co.
      b. Or District approved equal.

2.3 GRAFFITI COATING *ADD-2*

A. Product and Manufacturer: Sure Klean® Weather Seal Blok-Guard® & Graffiti Control Ultra 15 manufactured by PROSOCO, Inc., 3741 Greenway Circle, Lawrence, KS 66046. Phone: (800) 255-4255; Fax: (785) 830-9797. E-mail: CustomerCare@prosoco.com
   1. Product Description: A high performance, clear, solvent-based silicone elastomer formulated to weatherproof concrete block and other porous masonry materials and protect treated surfaces from repeated graffiti attacks with little to no change to the natural appearance.

2. Graffiti removal is fast and easy using Defacer Eraser® Graffiti Wipe.
3. Typical Technical Data
   Form: Clear liquid, petroleum odor
   Specific Gravity: 1.28
   pH: not applicable
   Weight/gallon: 10.62 pounds
   Active content: 15 percent
   Total solids: 15 percent ASTM D2369
   VOC content: less than 100 grams per Liter
   Flash point: 100 degrees F (38 degrees C) ASTM D3278
   Freeze point: less than -22 degrees F (less than -30 degrees C)
   Shelf life: 1 year in tightly sealed, unopened container

PART 3 EXECUTION

3.1 PREPARATION

A. Ensure items built-in by other trades for this work are properly located and sized. Fill in solidly with masonry around built-in items. Fill space between hollow metal frames and masonry solidly with mortar.

B. Establish lines, levels and coursing. Protect from disturbances.

C. Rake out mortar in preparation for application of sealants, where required.

3.2 CONCRETE BLOCK WORKMANSHIP AND INSTALLATION

A. Place masonry in accordance with lines and levels indicated on Drawings. Lay from exposed side, plumb, level and true to modular dimensions.

B. Fully bond external and internal corners.

C. Install joint reinforcing, anchors and ties in full mortar surround and where necessary fill voids in blocks to provide full bed to completely imbed items.

D. Keep concrete block dry, under cover and lay only clean, dry undamaged units. Do not lay units with moisture content over 40 percent.

E. Lay hollow concrete masonry units with full mortar coverage on vertical face shells. Bed webs in mortar in starting course.

F. Lay solid masonry units with completely filled bed and head joint, except at expansion and control joints. Butter ends with sufficient mortar to fill head joints and shove into place.
   1. Do not slush head joints.
   2. Bevel rear of bed joint at cavity to exclude mortar from protruding into cavity.

G. Isolate masonry partitions from vertical structural framing members with control joint, with mortar raked back 3/4 inch install backer rod and sealany.

H. Do not shift or tap masonry after mortar has taken initial set. Where adjustment must be made, remove mortar and replace.

I. Ensure masonry courses are of uniform height. Make vertical and horizontal joints equal and of uniform thickness. in full bed of mortar, properly jointed with other work.

J. Remove excess mortar and projections. Take care to prevent breaking masonry corners. Do not let mortar fall into cavity air space, clean out promptly.

K. Perform job site cutting of masonry with proper power tools to provide straight and true, unchipped edges.

L. Lay exposed concrete block in running bond with vertical joint in each course centered on units in course above and below.

M. Where piping and conduit run in masonry, work with other trades to coordinate work. Cut out center bridges in block to create voids for pipes or conduit. Where pipes or conduit exit from wall, drill neat holes to provide neat unpatched walls.

N. Build inner wythe ahead of outer wythe to receive insulation or vapor retarder adhesive.

O. Strike flush and then tool to dense sealed surface mortar joints that will be covered by earth.

P. Tool exposed joints slightly concave to dense smooth surface without overlaps from horizontal to vertical joints. Tool exposed mortar when thumbprint hard. Joints behind ceramic tile shall be flush. Rake out mortar in preparation for application of sealants, where required.

3.3 TOLERANCES

A. Maximum variation from masonry unit to adjacent masonry unit: 1/16 inch.

B. Maximum variation from vertical and horizontal building lines: 1/4 inch in 10 feet.

C. Maximum variation from cross sectional thickness of cavity and composite walls: Plus or minus 1/4 inch.

D. Maintain flush face on exposed masonry surfaces.

E. Lay concrete block to receive thinset ceramic tile plumb, with flush mortar joints and with maximum surface variation of 1/8 inch in 10 feet.

3.4 REINFORCEMENT AND ANCHORAGES

A. Place masonry reinforcing as shown on Drawings and in accordance with Section 040523 - Masonry Accessories.

B. Reinforce walls, except masonry veneer, with continuous horizontal joint reinforcing and masonry ties. Fully embed longitudinal side rods in mortar for entire length with minimum cover of 5/8 inch on exterior side of walls and 1/2 inch at other locations.

C. Anchor single wythe masonry veneer to concrete back-up with dovetail anchors. Provide additional anchors within 1 foot of openings.

D. Fully reinforce corners and intersections.

E. Lap masonry reinforcing splices minimum 6 inches.

3.5 COREFILL AND GROUT

A. Place corefill concrete at intervals not to exceed 5 feet of wall height during construction of walls, unless cleanouts are provided in which case 8 foot lifts may be used.

B. Rod or vibrate corefill to insure complete filling of cells.

C. Allow at least 15 minutes between successive pour lifts to permit settlement.

D. Stop intermediate pours at least 1-1/2 inch below mortar joint.

E. Exercise care during filling of cells to insure reinforcement is properly positioned. Tie vertical bars to joint reinforcing at 32 inch centers to maintain their proper location.

F. Use care to prevent mortar droppings from accumulating at base of cells. Provide temporary clean out openings, if necessary, at base of cells in order to remove droppings prior to placement of corefill concrete.

3.6 BOND BEAMS AND LINTELS

A. Provide reinforced concrete block lintels over openings where indicated on drawings.

B. Construct lintels and bond beams using concrete and reinforcing steel specified to PCA recommendations. Maintain minimum 6 inch bearing on each side of openings. Erect on full even beds of mortar with minimum one course filled-core hollow units under lintels and beams.

C. For lintels, use reinforcing bars of full lengths only.

D. Place and consolidate concrete without disturbing reinforcing. Construct lintels on plank, adequately supported, joints equally spaced. Do not support lintels with hollow metal door frames. Fill spaces around built-in items solid with masonry and mortar unless otherwise indicated. Clean out spaces prior to pouring concrete fill.

E. Allow lintels to reach 90 percent design strength or 28 days before removing temporary supports. Remove units that show evidence of cracking.

3.7 JOINT FILLERS AND DEFLECTION MATERIAL

A. Install fillers in accordance with manufacturer's printed instructions. Compressible fillers shall be of joint size.

B. Set units at proper depth or position in joint to coordinate with other work, including installation of bond breakers, backer rods and sealants. Do not leave voids or gaps between ends of joint filler units. Recess exposed edges or faces or compressible fillers slightly behind adjoining surfaces so that compressed units will not protrude from joint.

3.8 THROUGH-WALL FLASHING AND WEEP SYSTEMS

A. Place through wall flashings in accordance with manufacturer's recommendations.

B. Install flashing as block is laid and protect from damage. Lap ends and seal, with laps in direction of moisture flow.

1. Adhesive apply and anchor flashing in place to prevent moisture from penetrating behind or under flashing.
2. At flashing horizontal terminations, construct end dams 1 block course in height with joints lapped and sealed.

C. Install rope wicks over flashing, cut flush with mortar face and leave end of wicks visible to insure drainage. Install at head joint location, at bottom of cavity walls, and at lintels and relieving angles. Secure at 45 degree angle to back-up.

D. Install cavity drainage mat at locations where flashing and weeps are required.

E. Install block vents in accordance with manufacturer's written instructions. Install at head joint locations, at bottom of cavity walls, and at lintels and relieving angles.

3.9 CONTROL JOINTS AND CONSTRUCTION JOINTS

A. Provide control joints in block work as indicated and where shown on Drawings, or if not shown, locate at 40 feet maximum for horizontal run of wall.

B. Do not continue horizontal masonry reinforcing across joints. End reinforcing approximately one inch either side of joints.

C. Form joints in block work, straight and true.

D. Keyed Control Joint in Bond Beams: At continuous bond beams, provide keyed control joint at construction joints.

1. Extend rebar beyond joint minimum of 18 inches.
2. Use 2X wood block drilled to allow rebar to pass through wood block.
3. Set block inside of bond beam and coat with form release agent.
4. Secure block in place before pouring bond beam.

3.10 BUILT-IN WORK

A. As work progresses, build-in items as indicated and required, including, hollow metal frames, window frames, steel angle lintels, nailing strips, anchor bolts, plates, sleeves, hangers, supports, and other items supplied by other trades. Wherever bolts, brackets and similar anchor items are cast-in masonry, fill voids in masonry with mortar to adequately anchor and transmit loads.

B. Build-in items plumb and true to lines and levels.

C. Bed anchors of hollow metal frames in mortar joints. Fill masonry cores at jambs with grout for full projection of frame anchors.

D. Do not build-in organic materials which will be subjected to rot or deterioration.

3.11 CUTTING AND FITTING

A. Cut and fit concrete block for chases, pipes, conduit, sleeves, and grounds. Cooperate with other sections of work to ensure correct size, shape and location. Provide not less than 8 inches of masonry between chase or recess and jamb of openings. Cut masonry units using motor-driven saws to provide clean, sharp, unchipped edges.

B. Obtain Architect's review prior to cutting or fitting any area not indicated on drawings, or which may impair appearance or strength of masonry work.

3.12 PARTITIONS

A. General: Carry masonry partitions up to structure above, unless otherwise noted.

B. Openings Through Walls: Except as otherwise indicated, where piping, conduit or similar features pass through walls, carefully fill spaces to block sound. Fill voids to permit movement and deflection. Fill solid around obstructions and voids to form effective closures.

C. Joint to Structure Above: Provide joint between masonry and over-structure and pack voids solidly with deflection material. Filling of voids shall permit movement and deflection. Fill solid around obstructions and voids to form effective closure.

D. Sand Filled Cores: Where indicated, fill cores in masonry wall solid with sand, full height of wall. Sand as specified in Section 040516 – Masonry Grouting.

3.13 GRAFFITI COATING *ADD-2*

A. Apply graffiti coating in accordance with manufacturer’s written instructions.

B. Applied with low-pressure spray, brush or roller, graffiti coating penetrates and fills pores to prevent water penetration through exterior walls exposed to normal weathering and protects treated surfaces from repeated graffiti attacks.

C. Apply enough graffiti coating in a single saturating application to completely wet the surface without creating drips, puddles or rundown. Brush out or back roll all runs and drips for uniform appearance. Do not over apply. One application is normally enough.

D. If a second coat is required or recommended, apply the second coat as soon as the first coat is dry to touch, or within 2 hours of the first coat. Immediately back roll or brush out runs and drips for a uniform appearance and to prevent build up. Allowing more than 2 hours between coats reduces effectiveness of the second coat.

3.14 FIELD QUALITY CONTROL - LEVEL 1 NONESSENTIAL FACILITIES

A. Testing and Inspection: Owner will engage qualified special inspectors in accordance with Section 014533.

1. Qualifications: The minimum category of special inspector required to perform services outlined below are noted by qualifications in parentheses. The definitions of the categories of special inspector are included in Section 014533.

B. Coordinate with independent testing and inspecting agency engaged by the Owner to perform field quality control inspection and testing.

1. Provide necessary scaffolding or temporary platforms required by testing agency in order to perform their work. Such scaffolding or platforms shall comply with safety regulations and shall be acceptable to testing agency.

C. Inspection of masonry is required during preparation of masonry wall prisms, sampling and placing of masonry units, placement of structural reinforcement, cleanout of grout space immediately prior to closing of elements and during all grouting operations.

D. "Continuous" Inspection of Masonry: Inspections noted below as being continuous shall be performed uninterrupted each day while the specific task is being performed.

1. Continuous inspection shall be provided for 100% of shear walls, masonry beams and masonry columns.

E. "Periodic" inspection of masonry: Inspection items noted below as being periodic shall be performed at least once per 1,000 square feet of surface but not less than once per week.

F. Samples and Tests for Special Inspections: (Technical II)
   1. Construction Testing Frequency: One set of tests for each 5000 sq. ft. of wall area or portion thereof, but not less than one set for the project.
      a. One set shall consist of testing three samples.
   2. Masonry Unit Tests – Perform in accordance with CBC Chapter 21.
      a. For each type of unit provided, verify units conform to strength, absorption, and unit weight requirements of ASTM C 55 or ASTM C 90 when tested in accordance with ASTM C 140.
      b. Provide units which match accepted samples as to texture and general character. Appearance will be an element considered for conformance. Contractor must arrange for tests and for delivery to laboratory.
   3. Masonry Prism Tests – Perform in accordance with CBC Chapter 21.
      a. For each type of construction provided, verify compressive strength of masonry equals or exceeds specified f'_m when tested in accordance with ASTM C 1314.
      b. Preparation, storage, handling of prism tests. (Contractor will provide labor and materials to construct all prism tests.)
   4. Mortar Tests for Unit Masonry Complying with ASTM C270 Proportion Specifications:
      a. For each mix provided, test mortar for initial consistency and board life, mortar aggregate ratio, and mortar air content in accordance with ASTM C 780.
   5. Mortar Tests for Unit Masonry Complying with ASTM C270 Property Specifications:
      a. For each mix provided, test mortar for initial consistency and board life, mortar air content and compressive strength in accordance with ASTM C 780.
   6. Flexural Bond Strength Testing:
      a. For each type of construction provided at the following applications, test mortar for flexural bond strength in accordance with ASTM E 518 or ASTM C 1072.
         1) Below grade masonry basement walls or retaining walls in contact with earth.
         2) Exposed exterior, above grade, load-bearing and non-load-bearing walls, and parapet walls.
   7. Grout Testing for each mix provided:
      a. Test grout for temperature in accordance with ASTM C 1064.
      b. Test grout for slump in accordance with ASTM C 143.
      c. Test grout for strength in accordance with ASTM C 1019. For each 50 cu yds placed or each day's work, whichever is less, make 3 grout samples and test one sample at 7 days and remaining 2 at 28 days.

G. Masonry Preparation and Placement (Technical II)
   1. Base Conditions: On a periodic basis, verify that masonry bearing surfaces are clean.
   2. Condition of Units: On a periodic basis, verify that masonry units are clean, sound and dry.
   3. Proportions of site prepared mortar: On a periodic basis, verify proportions of prepared mortar are consistent with previously submitted materials.
   4. Placement: On a periodic basis, inspect laying of masonry units for the following: nominal unit widths, stack or running bond, proper thickness and tooling of mortar joints, acceptable depth of furrowing of bed joints. Note temperature at time of inspection.
   5. Joints: On a periodic basis, inspect construction, expansion and contraction joints for location and continuity of steel.
   6. On a periodic basis, verify hot and cold weather procedures are followed.
   7. On a periodic basis, verify wall cavities are protected against entry of precipitation.

H. Masonry Reinforcement (Structural I)
   1. Vertical Reinforcement: On a periodic basis, inspect placement and alignment of vertical bars and dowels for size, grade and spacing. Inspect length of lap splices, clearances between bars, clearances to masonry units and outside face of walls and positioning of steel.
   2. Horizontal Reinforcement: On a periodic basis, inspect horizontal joint reinforcement (HJR) steel and masonry reinforcement bars for size, length of lap splices, dowels, clearances between bars, clearance to masonry units and outside face of walls and alignment.

3. Ties: On a periodic basis, inspect ties in masonry for type, straightness, embedment, spacing and size.
4. Dowels and Anchors: On a periodic basis, inspect the installation of masonry anchor bolts, joist anchors, inserts, straps and dowels.

I. Prior to Masonry Grouting and Capping (Technical II)

1. Grout Spaces: On a periodic basis, verify that grout spaces are correctly sized and clean, cleanouts are closed after inspection and grout barriers are in place before grouting.
2. Reinforcement: On a periodic basis, verify placement of reinforcement and connectors remains consistent with Contract Documents.
3. Site Prepared Grout: On a periodic basis, verify proportions of site prepared grout are consistent with previously submitted materials.

J. During Grout Placement (Technical II)

1. Grouting:
   a. Continuously observe proper grouting technique including consolidation to approved height of grout space, cleanouts, rebar positioning, reconsolidation and vibration.
   b. Grout Specimens: Observe 100% of preparation of all required grout specimens, mortar specimens, and/or prisms to be tested.
2. Dry Packing: On a periodic basis, verify proper application of dry packing.

3.15 FIELD QUALITY CONTROL - LEVEL 2 ESSENTIAL FACILITIES

A. Testing and Inspection: Owner will engage qualified special inspectors in accordance with Section 014533.

1. Qualifications: The minimum category of special inspector required to perform services outlined below are noted by qualifications in parentheses. The definitions of the categories of special inspector are included in Section 014533.

B. Coordinate with independent testing and inspecting agency engaged by the Owner to perform field quality control inspection and testing.

1. Provide necessary scaffolding or temporary platforms required by testing agency in order to perform their work. Such scaffolding or platforms shall comply with safety regulations and shall be acceptable to testing agency.

C. Inspection of masonry is required during preparation of masonry wall prisms, sampling and placing of masonry units, placement of structural reinforcement, cleanout of grout space immediately prior to closing of elements and during all grouting operations.

D. "Continuous" Inspection of Masonry: Inspections noted below as being continuous shall be performed uninterrupted each day while the specific task is being performed.

1. Continuous inspection shall be provided for 100% of shear walls, masonry beams and masonry columns.

E. "Periodic" inspection of masonry: Inspection items noted below as being periodic shall be performed at least once per 1,000 square feet of surface but not less than once per week.

F. Samples and Tests for Special Inspections: (Technical II)

1. Construction Testing Frequency: One set of tests for each 5000 sq. ft. of wall area or portion thereof, but not less than one set for the project.
   a. One set shall consist of testing three samples.
2. Masonry Unit Tests – Perform in accordance with CBC Chapter 21.
   a. For each type of unit provided, verify units conform to strength, absorption, and unit weight requirements of ASTM C 55 or ASTM C 90 when tested in accordance with ASTM C 140.
   b. Provide units which match accepted samples as to texture and general character. Appearance will be an element considered for conformance. Contractor must arrange for tests and for delivery to laboratory.
3. Masonry Prism Tests – Perform in accordance with CBC Chapter 21.
   a. For each type of construction provided, verify compressive strength of masonry equals or exceeds specified f'_m when tested in accordance with ASTM C 1314.
   b. Preparation, storage, handling of prism tests. (Contractor will provide labor and materials to construct all prism tests.)

4. Mortar Tests for Unit Masonry Complying with ASTM C270 Proportion Specifications:
    a. For each mix provided, test mortar for initial consistency and board life, mortar aggregate ratio, and mortar air content in accordance with ASTM C 780.
5. Mortar Tests for Unit Masonry Complying with ASTM C270 Property Specifications:
    a. For each mix provided, test mortar for initial consistency and board life, mortar air content and compressive strength in accordance with ASTM C 780.
6. Flexural Bond Strength Testing:
    a. For each type of construction provided at the following applications, test mortar for flexural bond strength in accordance with ASTM E 518 or ASTM C 1072.
        1) Below grade masonry basement walls or retaining walls in contact with earth.
        2) Exposed exterior, above grade, load-bearing and non-load-bearing walls, and parapet walls.
7. Grout Testing for each mix provided:
    a. Test grout for temperature in accordance with ASTM C 1064.
    b. Test grout for slump in accordance with ASTM C 143.
    c. Test grout for strength in accordance with ASTM C 1019. For each 50 cu yds placed or each day's work, whichever is less, make 3 grout samples and test one sample at 7 days and remaining 2 at 28 days.

G. Masonry Preparation and Placement (Technical II)
1. Base Conditions: On a periodic basis, verify that masonry bearing surfaces are clean.
2. Condition of Units: On a periodic basis, verify that masonry units are clean, sound and dry.
3. Proportions of site prepared mortar: On a periodic basis, verify proportions of prepared mortar are consistent with previously submitted materials.
4. Placement: On a periodic basis, inspect laying of masonry units for the following: nominal unit widths, stack or running bond, proper thickness and tooling of mortar joints, acceptable depth of furrowing of bed joints. Note temperature at time of inspection.
5. Joints: On a periodic basis, inspect construction, expansion and contraction joints for location and continuity of steel.
6. On a continuous basis, verify hot and cold weather procedures are followed.
7. On a continuous basis, verify wall cavities are protected against entry of precipitation.

H. Masonry Reinforcement (Structural I)
1. Vertical Reinforcement: On a continuous basis inspect placement and alignment of all vertical bars and dowels for size, grade and spacing. Inspect length of lap splices, clearances between bars, clearances to masonry units and outside face of walls and positioning of steel.
2. Horizontal Reinforcement: On a periodic basis, inspect horizontal joint reinforcement (HJR) steel and masonry reinforcement bars for size, length of lap splices, dowels, clearances between bars, clearance to masonry units and outside face of walls and alignment.
3. Ties: On a periodic basis, inspect ties in masonry for type, straightness, embedment, spacing and size.
4. Dowels and Anchors: On a continuous basis inspect the installation of masonry anchor bolts, joist anchors, inserts, straps and dowels.

I. Prior to Masonry Grouting and Capping (Technical II)
1. Grout Spaces: On a continuous basis, verify that grout spaces are correctly sized and clean, cleanouts are closed after inspection and grout barriers are in place before grouting
2. Reinforcement: On a periodic basis, verify placement of reinforcement and connectors remains consistent with Contract Documents.
3. Site Prepared Grout: On a periodic basis, verify proportions of site prepared grout are consistent with previously submitted materials.

J. During Grout Placement (Technical II)
1. Grouting:
    a. Continuously observe proper grouting technique including consolidation to approved height of grout space, cleanouts, rebar positioning, reconsolidation and vibration.
    b. Grout Specimens: Observe 100% of preparation of all required grout specimens, mortar specimens, and/or prisms to be tested.
2. Dry Packing: On a periodic basis, verify proper application of dry packing.

3.16 CLEANING

A. Wipe off excess mortar as work progress. Dry brush at end of each days work. Remove excess mortar and smears upon completion of masonry work.

B. Point or replace defective mortar. Match adjacent work.

C. After mortar is thoroughly set and cured, clean exposed surfaces with masonry cleaner in accordance with cleaner manufacturer's printed instructions. Use non-metallic tools in cleaning operations.

END OF SECTION

SECTION 055000
METAL FABRICATIONS

Revised, Addendum #2, 09/01/2017

PART 1 GENERAL

1.1 SUMMARY

A. Section Includes:

1. Miscellaneous and ornamental metal, except structural steel framing as specified in Section 051200 and defined as structural steel in AISC "Code of Standard Practice".
2. Supports, anchorage and accessories for miscellaneous metal and ornamental metal work.
3. Shop prime paint on ferrous metal.
4. Shop prime for (Section 099600) high performance coating, where indicated.
5. Pre-engineered metal stair system as follows:
   a. Engineering of metal stair system including handrails and connections to building structure.
   b. Steel pan type stairs and landings, with integral handrails and balusters, plates, angles, hangers, struts and welds for securing to building structure.
6. Steel handrails and guardrails.
7. Galvanized metal gratings and supports.
8. Steel framing, supports and mounting plates at overhead doors.
9. Ladders.
10. Bollards.
11. Sliding metal gate.
12. Metal fin.

B. Related Sections:

1. Section 017325 - Seismic Restraint Requirements for Nonstructural Components
2. Section 033000 – Cast-In-Place Concrete.
3. Section 042000 - Unit Masonry.
4. Section 051200 - Structural Steel Framing.
5. Section 089100 - Louvers.
6. Section 099000 – Painting: Finish painting.
7. Section 099600 - High Performance Coatings: Coating of Architecturally Exposed metal fabrication steel (AES).

1.2 REFERENCES

A. AWS D1.1 - Structural Welding Code.

B. SSPC PS7.01 - Steel Structures Painting Council.

C. Specification for Design of Cold-Formed Steel Structural Members by American Iron and Steel Institute.

D. ANSI A14.3 Safety Code for Fixed Ladders.

1.3 STAIR SYSTEM DESCRIPTION

A. General: Provide complete stair and landing systems including stringers, landing framing, treads, landings, connections and other components necessary for the support and installation of stairs and landings, comply with NAAMM requirements for Service Class Stairs.

B. Structural Performance of Stairs: Provide metal stairs capable of withstanding following structural loads without exceeding allowable design working stress of materials involved, including anchors and connections. Apply each load to produce maximum stress in each component of metal stairs.

1. Treads and Platforms of Metal Stairs: Capable of withstanding uniform live load of 100 lb/sq ft or concentrated load of 300 lb/sq ft on area of 4 sq. in., whichever produces greater stress.
2. Stair Framing: Capable of withstanding stresses resulting from loads specified above in addition to stresses resulting from railing system loads.

3. Design and construct stair components and connections capable of withstanding seismic forces in any direction and capable of accommodating seismic relative displacements. Refer to Section 017325 for seismic design, loading and deflection criteria.
4. Egress stair components and connections as defined in the life safety plan or as indicated in the Section 017325 Responsibility Matrix shall be designed as a “Designated Seismic Systems”
5. Limit deflection of treads, platforms, and framing members to L/360 or 1/4 inch, whichever is less.

C. Structural Performance of Handrails and Railings: Provide handrails and railings capable of withstanding following structural loads without exceeding allowable design working stress of materials for handrails, railings, anchors, and connections:
1. Handrails and Top Rails of Guards:
   a. Uniform load of 50 lbf/ ft. (0.73 kN/m) applied in any direction.
   b. Concentrated load of 200 lbf (0.89 kN) applied at any point and in any direction.
   c. Uniform and concentrated loads need not be assumed to act concurrently.
2. Intermediate Rails, Balusters and Panel Fillers Not Serving as Top Rails:
   a. Concentrated load of 50 lbf (0.22 kN) applied normal to the plane of the rail or panel on an area not to exceed 1 sq. ft. (0.093 sq. m).
   b. Infill load and other loads need not be assumed to act concurrently.

1.4 SUBMITTALS

A. Comply with Section 013300.

B. Shop Drawings: Indicate dimensions, description of materials and finishes; include plans, elevations, sections, and details of railings and their connections and reactions to building structure. Show anchorage and accessory items. Provide templates for anchors and bolts specified for installation under other Sections, and installation procedures, including specific requirements indicated.
1. Indicate design criteria and reactions to structure.
2. Construction details, sizes of metal sections, thickness of metals, profiles, attachments, dimensions and field joints, method of support from structure, and finishes.
3. Work to be built-in or provided by other Sections.
4. Welding: Indicate welded connections, both shop and field, using standard AWS welding symbols. Indicate net weld lengths.
5. Provide shop drawings signed and sealed by qualified professional engineer responsible for their preparation licensed in State where project is located.

C. Calculations: Structural design shall be performed by a Professional Engineer, licensed in the state where Project is located, indicating structural integrity of members, anchors, fasteners and connections to building structure, in accordance with specified criteria. Submit signed engineering calculations concurrently with the shop drawings to Architect/Engineer upon request.
1. Engineering Responsibility: Calculations shall be reviewed for stated design assumptions, general compliance to specified requirements, and forces imposed on structure. The accuracy of the design calculations shall be the sole responsibility of the Contractor’s Professional Engineer.

D. Welding Certificates: Copies of certificates for welding procedures and personnel.

1.5 QUALITY ASSURANCE

A. Applicable Standards: AISC "Specifications for Design of Cold-Formed Steel Structural Members" and AWS "Structural Welding Code".

B. Qualification for Welding Work: Qualify welding processes and welding operators in accordance with AWS "Standard Qualification Procedure".

C. Field Measurements: Take field measurements prior to fabrication to insure proper fitting of work.

D. Shop Assembly: Preassemble metal items in shop to greatest extent possible, so as to minimize field splicing and assembly. Disassemble units only to extent necessary for shipping and handling limitations. Clearly mark units for reassembly and coordinated installation.

E. Fabricator Qualifications: Firm experienced in producing metal fabrications similar to those indicated for this Project and with record of successful in-service performance, as well as sufficient production capacity to produce required units.

F. Professional Engineer Qualifications: Professional engineer who is legally qualified to practice in jurisdiction where Project is located and who is experienced in providing engineering services of kind indicated. Engineering services are defined as those performed for installations of handrails and railing systems that are similar to those indicated for this Project in material, design, and extent of work.

1.6 HANDLING AND STORAGE

A. Load, unload, handle and store work in manner that will not bend, deform or otherwise damage metal. Store so metal and shop coats will not be subject to weather or moisture, store off ground and provide covering for metal in storage.

1.7 COORDINATION

A. Coordinate installation of anchorages for metal fabrications. Furnish setting drawings, templates, and directions for installing anchorages, including sleeves, concrete inserts, anchor bolts, and items with integral anchors, that are to be embedded in concrete or masonry. Deliver such items to Project site in time for installation.

PART 2 PRODUCTS

2.1 MATERIALS

A. Metal Surfaces: For fabrication of miscellaneous metal work items which will be exposed to view, use only materials which are smooth and free of surface blemishes, including pitting, seam marks, roller marks, rolled trade names and roughness. Select steel for exposed work to provide best possible appearance.

B. Steel Plates, Shapes and Bars: ASTM A36.

C. Steel Tubing: ASTM A501 or ASTM A500.

D. Steel Pipe: ASTM A53, Type S, Grade A, standard weight and extra-strong as required, galvanized and plain.

E. Galvanized Sheet Metal: ASTM A526 or A527, G-90 coating designation with both sides of metal prime painted.

F. Galvanizing: ASTM A123, hot dip galvanizing, thickness Grade 55 unless otherwise indicated.
   1. Galvanize exterior steel fabrications, steel at exterior wall locations, and where steel is exposed to weather.

G. Fasteners: As indicated and recommended by manufacturer. Provide zinc- coated fasteners for exterior use or where built into exterior walls.
   1. Provide stainless steel fasteners where indicated and where dissimilar metals are connected. Where dissimilar metals are connected, provide neoprene spacer or washer for isolation.

H. Stainless Steel: ASTM A167, Type 304 with #4 finish. Passivate exterior stainless steel.

I. Metal Primer Paint: Provide comparable primer recommended by finish coat manufacturer which is lead and chromate free, Low VOC complying with VOC guidelines.
   1. Primer for Metal to Receive High Performance Coatings (HPC): See Section 099600 for products to be applied by this Section.
   2. Primer to Receive Fire Protection Treatment: See applicable Division 7 Section for primer to be applied by this Section.
   3. Primers for Painting: See Section 099000 for primers to be applied by this Section.

2.2 FABRICATION

A. Form exposed work true to line and level with accurate angles and surfaces and straight sharp edges. Ease exposed edges to radius of 1/32 inch, unless otherwise shown. Form bent metal corners to smallest radius possible without causing grain separation or otherwise impairing work.

B. Weld corners and seams continuously and in accordance with AWS. At exposed connections, grind exposed welds smooth and flush to match and blend with adjoining surfaces.

C. Form exposed connections with hairline joints which are flush and smooth, using concealed fasteners wherever possible.

D. Fabricate and space anchoring devices to provide adequate support. Cut, reinforce, drill and tap metal work to receive finish hardware and similar items.

E. Shop Painting: Remove scale, rust and other deleterious materials before shop coat of paint is applied. Apply shop coat of metal primer to fabricated metal items in accordance with manufacturer's printed instructions, with full coverage of joints, corners and edges.

F. Primer: High Performance Coating: At high performance painting use SSPC-6, complying with Section 099600.

1. Apply shop primer after surface preparation in compliance with primer manufacturer's instructions at a rate to provide uniform dry film thickness of 1.5 mils, maintain minimum coverage at joints, corners, edges and exposed surfaces.

2.3 HANDRAILS AND RAILINGS

A. (RAIL-3), (RAIL-4), (RAIL-5), (RAIL-6) and (MET RAIL-1), (MET RAIL-2), (MET RAIL-4) and (MET RAIL-5) Types and Handrail Sizes: Refer to Material Identification Codes. ***ADD-2***

B. Cope intersections of rails and posts, weld joints and grind smooth. Butt weld end-to-end joints of railing or use welding connectors.

1. Galvanize exterior handrails and railings.

C. Weld corners and seams continuously and in accordance with recommendations of AWS. Grind exposed welds smooth and flush, to match and blend with adjoining surface. Discoloration of finished surfaces is not acceptable.

D. Form exposed connections with flush, smooth, hairline joints, using concealed fasteners. Provide for anchorage to supporting structure. Fabricate and space anchoring devices as indicated and required for adequate support.

E. Provide brackets, flanges, and anchors for railing posts and for handrail supports. Provide inserts and sleeves for anchorage to concrete or masonry work.

F. Form simple and compound curves by bending pipe in jigs to produce uniform curvature for each repetitive configuration required; maintain cylindrical cross-section of pipe throughout entire bend without buckling, twisting or otherwise deforming exposed surfaces of pipe.

G. Provide wall returns at ends of wall-mounted handrails, except where otherwise indicated.

H. Close exposed ends of pipe by welding 3/16 inch thick steel plate in place or by use of prefabricated fittings.

2.4 STAIR FABRICATION

A. (MET FAB-1): Shop fabricated steel stair, steel pan concrete filled.

B. General:

1. Verify dimensions on site prior to shop fabrication.
2. Fit and shop assemble sections in largest practical sizes, easily handled through building openings.
3. Accurately form and fit components and connections. Grind exposed edges and welds smooth and flush.
4. Accurately form components required for proper anchorage of stairs and landings, and integral railings to each other and to building structure.

5. Thoroughly clean surfaces of rust, scale, grease, and foreign matter prior to galvanizing or prime painting. Allow to dry thoroughly before applying priming material.

C. Fabrication of Stairs and Landings:
   1. Fabricate stairs with closed risers and treads of pan construction.
   2. Form treads and risers from sheet stock.
   3. Properly secure tread pans to stringers with clip angles welded in place.
   4. Form stringers of rolled steel channels or steel plate sections, as required to meet performance requirements. Weld fascia plates of minimum 14 gage thick sheet stock across channel toes, where applicable.
   5. Form landings of sheet stock. Reinforce underside of landings with angles, tees as required.
      a. Fabricate stairs, landings and component connections to support live loads of minimum 100 lb./sq.ft. with deflection of stairs and landings not exceeding 1/360 of span when underside is to be finished with gypsum board and 1/240 of span when underside is not being finished.

D. Concrete Materials and Properties: Comply with requirements in Division 3 Section "Cast-in-Place Concrete" for normal-weight, ready-mixed concrete with minimum 28-day compressive strength of 3000 psi, unless higher strengths are indicated.

E. Fabrication of Handrails and Guardrails:
   1. Handrails: Handrails shall have an outside diameter of 1-1/2".
   2. Inside handrails shall be continuous and shall sweep around smoothly at landings.
   3. Outside handrails shall be mounted on wall brackets as required to meet performance requirements and shall have extensions at top and bottom of stair runs as indicated on the Drawings and required by accessibility standards.
   4. Intermediate Guard Configuration: Intermediate guard shall be configured as indicated on drawings.
      a. Provide railing system consisting of 1-1/2 inch round sloping strands following each stair run and 1-1/2 inch round top rails that continuously sweep around at each corner.
   5. At top floor of stair system and at each floor landing (except lower level) provide 3'-6" high guard rails.
   6. Continue handrail and intermediate guard system down to the lower level where concrete stairs are indicated.

2.5 METAL SUPPORT ASSEMBLY

A. (MSA) Metal Support Assembly Manufacturer and Type:
   1. Unistrut Corporation:
      a. Unistrut Metal Framing.
      b. UMS Boom Supports
   2. Cooper B-Line Strut Systems,
   3. Hilti USA:
      a. Hilti Strut Framing.
      b. Hilti Medical Equipment Supports.
   4. Or District approved equal.
   5. Propriety equipment supports systems to be approved by the Architect.

B. (MSA-1) Individual Metal Support Assembly: Metal support assembly designed to provide support for individual piece of equipment,
   1. Provide support assembly for individual pieces of equipment as shown on the architectural reflected ceiling plan.
   2. Verify loading, deflection criteria and tolerance requirements with equipment supplier. See structural drawings for special loading requirements.
   3. Design and construct assembly, including anchorage, to withstand seismic forces in any direction. Refer to Section 017325 for seismic loading criteria and restraint requirements.
   4. Provide lateral diagonal bracing, orthogonal in two directions to prevent assembly from racking due to seismic forces.
   5. Verify bolting plate assembly requirements with equipment supplier.
   6. located and spaced as indicated on Drawings or as required by the equipment supplier.

2.6 METAL GRATINGS

A. (GRT-1) Galvanized Metal Gratings: Borden Metal Products Type B size 5 pressure locked steel gratings with 1-1/4 inch by 1/8 inch bearing bars at 1-3/16 inch centers and 3/4 inch by 1/8 inch cross bars at 4 inch centers, galvanized finish in accordance with ASTM A123.

2.7 METAL GRILLES

A. (GRL-1) Aluminum ceiling grille.

B. (GRL-2) Aluminum wall grille.

2.8 METAL LADDERS

A. (MET FAB-2) Interior Steel Ladder:

1. Comply with ANSI A14.3, unless otherwise indicated.
2. Height as indicated on Drawings.
3. Siderails: Continuous, 3/8 by 2-1/2 inch steel flat bars, with eased edges. Space siderails 16 inches apart, unless otherwise indicated.
4. Rungs: 3/4 inch diameter steel bars at 12 inches on center.
5. Fit rungs in centerline of siderails; plug-weld and grind smooth on outer rail faces.
6. Provide nonslip surfaces on top of each rung, either by coating rung with aluminum-oxide granules set in epoxy-resin adhesive or by using a type of manufactured rung filled with aluminum-oxide grout.
7. Support each ladder at top and bottom, and not more than 60 inches o.c. with welded or bolted steel brackets.
8. Prime with zinc-rich primer.

2.9 BOLLARDS

A. (MET FAB-8) Removable Bollards: Trafficguard Model TL 1004 R, or District approved equal, as indicated on Drawings and consisting of the following components:

1. 5 inch dia. pipe.
2. Exposed pipe above footing: 36” high.
3. Concrete footing per manufacturer’s written instructions with sleeve for pipe in concrete footing.
4. Tamper proof lock provided for securing cover when bollard removed.

B. (MET FAB-9) Bollards Imbedded in Concrete: Trafficguard Model RFP 4560 R, or District approved equal. Hot-dipped galvanized steel pipe, 5 inch dia., concrete filled, crowned cap, prime paint finish only the exposed top 3'-6".

1. Anchor bollards in place with concrete footings. Place concrete and vibrate or tamp for consolidation. Support and brace bollards in position until concrete has cured.
2. Fill bollards solidly with concrete, mounding top surface to shed water.

2.10 SLIDING METAL GATE

A. (GATE-1) Sliding Metal Gate: Ameristar PassPort II Classic Industrial Roll Gate System as manufactured by Ameristar Fence Products, Inc., Tulsa, OK, (888) 333-3422, www.ameristarfence.com

1. Steel material for roll gate components (i.e. pickets, rails, diagonals and uprights), shall be commercial steel with a minimum yield strength of 45,000 psi.
2. Ornamental picket material shall be 1” square x 14 Ga. Tubing. Picket spacing shall be 4-3/4”. Material for toprails, uprights and diagonals rails shall be 2” square x 12 Ga. Material for the bottom rail shall be 2” x 4” x 11 Ga. Posts shall be a minimum of 4” square x 11 Ga.
3. Pickets/pales, rails, uprights and posts shall be precut to specified lengths. Diagonals shall be precut to specified lengths and angles. Frame materials shall be joined by welding. Pickets/pales shall be face welded to roll gate frame.

4. The manufactured roll gates and bolt-on panels (if applicable) shall be subjected to the PermaCoat® thermal stratification coating process (high-temperature, in-line, multi-stage, multi-layer) including, as a minimum, a six-stage pre-treatment/wash (with zinc phosphate), an electrostatic spray application of an epoxy base, and a separate electrostatic spray application of a polyester finish. The base coat shall be a thermosetting epoxy powder coating (gray in color) with a minimum thickness of 2 mils. The topcoat shall be a "no-mar" TGIC polyester powder coat finish with a minimum thickness of 2 mils. The color shall be selected by the Architect from manufacturer's standard colors.

2.11 METAL FIN

A. (FIN-1) Metal Fin: Extruded aluminum fin, 12' x 3" x 3/8", finish: Light Gray (powder coat).
   1. Profile, Attachment Method, and Fasteners: As indicated on Drawings.

PART 3 EXECUTION

3.1 EXAMINATION

A. Examine areas and conditions under which miscellaneous metal items are to be installed. Do not proceed with work until unsatisfactory conditions have been corrected.

3.2 INSTALLATION

A. Provide setting drawings, diagrams, templates, instructions and directions for installation of anchorages, such as concrete inserts, anchor bolts, and miscellaneous items having integral anchors, which are to be embedded in concrete or masonry construction. Coordinate delivery of such items to project site.

B. Provide anchorage devices and fasteners where necessary for securing miscellaneous metal items to in-place construction; including threaded fasteners for concrete and masonry inserts, toggle bolts, through-bolts, lag bolts, wood screws and other connectors as required.

C. Perform cutting, drilling and fitting required for installation of miscellaneous metal items. Set work accurately in location, alignment and elevation, plumb, level, true and free of rack, measured from established lines and levels. Provide temporary bracing or anchors in formwork for items which are to be built into concrete, masonry or similar construction.

D. Fit exposed connections accurately together to form tight hairline joints. Weld connections which are not to be left as exposed joints, but cannot be shop welded because of shipping size limitations. Grind joints smooth and touch up shop paint coat. Do not weld, cut or abrade surfaces of exterior units which have been hot-dip galvanized after fabrication, and are intended for bolted or screwed field connections.

E. Comply with AWS Code for procedures of manual shielded metal-arc welding, appearance and quality of welds made, and methods used in correcting welding work.

F. Immediately after erection, clean field welds, bolted connections, and abraded areas of shop paint, and paint exposed areas with same material as used for shop painting. Apply by brush or spray to provide minimum dry film thickness of 2 mils.

G. Install metal gratings and supports according to reviewed shop drawings and manufacturer instructions.

3.3 METAL SUPPORT ASSEMBLY

A. Examination
   1. Verification of Conditions: Examine areas and conditions under which Work is to be performed and identify conditions detrimental to proper or timely completion.
      a. Do not proceed until unsatisfactory conditions have been corrected.
   2. Take field measurements; report interferences with structural framing, mechanical systems, or other obstructions to Architect.

B. Installation

1. Install equipment support systems and accessories in accordance with reviewed shop drawings and manufacturer's printed instructions.
   a. Install before extensive electrical, mechanical, ceiling framing or room finish work.
2. Provide anchorage devices and fasteners for securing equipment support systems to in-place construction.
3. Attach to structure by means of imbedded concrete inserts, through bolts or by direct attachment to structural framing. If expansion anchors are used to anchor metal framing to support structure locate in such manner that anchor bolt is loaded in shear.
4. Set system accurately in location, alignment and elevation, plumb, level, true and free of rack, measured from established lines and levels.

3.4 METAL STAIR ERECTION

A. Erect stairs square, level, plumb and free from distortion or defects detrimental to appearance and performance.

B. Provide necessary anchors, plates, angles, hangers and struts as required for connecting stairs to the structure.

C. Ensure alignment with adjacent construction. Coordinate with related work to ensure no interruption in installation.

D. Perform necessary cutting and altering for installation of work of other sections. Do not perform any other additional cutting without review of Architect.

E. Field bolt and weld to match standard of shop bolting and welding. Hide bolts and screws whenever possible. Where not hidden, use flush countersunk fastenings, unless indicated otherwise. Make mechanically fastened joints flush hairline butted. Grind welds smooth and flush.

F. Touch up Painting: Immediately after erection, clean field welds, bolted connections, and abraded areas of shop paint, and paint exposed areas with the same material as used for shop painting to comply with SSPC-PA for touching up shop-painted surfaces.
   1. Apply by brush or spray to provide minimum 2-mil dry film thickness.

3.5 HANDRAILS AND RAILINGS

A. Provide anchorage devices and fasteners for securing handrails and railings to in-place construction.

B. Adjust railing prior to securing in-place to ensure proper matching at butting joints and correct alignment. Secure posts and rail ends to building construction.

C. Anchor steel pipe rails in concrete by means of galvanized pipe sleeves set and anchored into concrete. Provide steel plate closure secured to bottom of sleeve and of width and length not less than one inch greater than sleeve. After post is inserted into sleeve, fill sleeve solid with quick-setting hydraulic cement.

D. Anchor rail ends to supporting structure with flanges welded to rail ends and bolted to supporting members in accordance with reviewed shop drawings. Secure handrails to walls with wall brackets and end fittings.

3.6 SLIDING METAL GATE INSTALLATION

A. Gateposts shall be set in accordance with the spacing’s shown in the construction plans. The “Earthwork” and “Concrete” sections of this specification shall govern post base material requirements. 6” wheels shall be bolted to the gate (between the wheel plates welded near the ends of the gate bottom rail). The gate shall be set upright with the V-grooved wheels positioned over the pre-installed steel V-track that traverses the gate opening. Roller guides shall be affixed to the gateposts at a height even with the gate toprail to hold the gate in a vertical position. Gate stops shall be welded to the end of the gate or track so gate cannot pass rollers in either direction.

END OF SECTION

SECTION 074244
COMPOSITE WALL PANELS

Revised, Addendum #2, 09/01/2017

PART 1 GENERAL

1.1 SUMMARY

A. Section Includes: Composite panel wall cladding system (CPNL), including:
   1. Solid composite panels.
   2. Sub-framing.
   3. Exposed fasteners.

B. Related Sections
   1. Section 054000 - Cold-Formed Metal Framing.
   2. Section 072100 - Thermal Insulation.
   3. Section 072670 - Moisture Barrier.
   4. Section 074213 - Formed Metal Wall Panels.
   5. Section 076210 – Prefinished Sheet Metal Flashing and Trim.
   6. Section 092216 – Non-Structural Metal Framing.

1.2 REFERENCES

A. ASTM International (ASTM):
   1. ASTM D 635 - Standard Test Method for Small Scale Burning.
   2. ASTM D 1929 - Standard Test Method for Ignition Temperature.
   3. ASTM D 2244 - Standard Practice for Calculation of Color Tolerances and Color Differences from Instrumentally Measured Color Coordinates.
   4. ASTM D 2247 - Standard Practice for Testing Water Resistance of Coatings in 100% Relative Humidity.
   5. ASTM E 84 - Standard Test Method for Surface Burning Characteristics of Building Materials.
   6. ASTM E 119 - Standard Test Method for Fire Rated or Fire Resistive Construction.

B. National Fire Protection Association (NFPA):
   1. NFPA 268 - Standard Test Method for Determining Ignitibility of Exterior Wall Assemblies Using a Radiant Heat Energy Source.
   2. NFPA 285 - Standard Fire Test Method for Evaluation of Fire Propagation Characteristics of Exterior Non-Load-Bearing Wall Assemblies Containing Combustible Components

1.3 SUBMITTALS

A. Product Data: Manufacturer's data sheet on each product to be used including:
   1. Preparation instructions and recommendations.
   2. Storage and handling requirements and recommendations.
   3. Installation materials and components.
   4. Manufacturer’s installation instructions.
   5. Certified test results from independent testing laboratory substantiating specified performance characteristics and physical properties.

B. Shop Drawings: Provide shop drawings that show elevations and details for Work of this Section including but not limited to:
   1. Elevations showing mounting and fastener pattern and spacing with dimensions complying with manufacturer’s requirements.
   2. Panel layout consistent with design intent shown on Drawing Elevations.
   3. Field verified dimensions.
   4. Details of each condition including attachment and mounting details.
   5. Installation coordination affecting related and adjacent materials such as opening and terminations.

6. Connections and reactions to structure.
7. Panel joint spacing meeting manufacturer's requirements.
8. Thermal expansion and contraction allowances.
9. Drainage design that comply with manufacturer's requirements.
10. Provide certified drawings for anchor design and reactions to structure that comply with design criteria reactions to structure including seismic details certified by a Professional Engineer registered in the State of New Jersey. Coordinate with Section 018820.

C. Samples:
1. Panels: Submit sample for each finish product specified, two samples a minimum of 36 inches by 12 inches, representing actual product, color, and patterns. Sample edges may vary from field panel edges.
2. Fasteners: 4 each of fasteners in specified color.

D. Quality Assurance Submittals:
1. Submit letter certifying compliance with qualification requirements in Quality Assurance article.
2. Manufacturer's Field Reports: Manufacturer's field reports specified herein.
3. Installer Certification: Upon request, submit names of projects of similar size and scope with contact information.

E. Closeout Submittals: Submit the following:
1. Operation and Maintenance Data: Operation and maintenance data for installed products in accordance with Division 1 Closeout Submittals (Maintenance Data and Operation Data) Section. Include methods for maintaining installed products and precautions against cleaning materials and methods detrimental to finishes and performance.
2. Actual warranty documents.

F. Warranty: Submit sample of manufacturer and installer warranty.

1.4 QUALITY ASSURANCE

A. Performance Requirements: Provide panels that have been manufactured, fabricated and installed to maintain performance criteria stated by manufacturer without defects, damage or failure.

B. Panel Manufacturer Qualifications: Company specializing in exterior cladding systems with minimum of 5 years experience.
1. Provide field service representation during fabrication and approving application method.
2. Obtain cladding and fastening components from a single manufacturer.

C. Installer Qualifications: Installer shall be experienced in the installation of the specified products, and have completed installations similar in extent and design with a verifiable record of successful performance.
1. Panel manufacturer shall review and approve qualifications of installer, verifying that installer meets manufacturer's requirements.
2. Installer shall be a firm that has at least five (5) years of experience with exterior wall applications and has successfully completed installations of similar scope and size to this project. ***ADD-2***
3. Installer shall have undergone training and been certified to install Trespa Meteon panels. ***ADD-2***

D. Mockups: Build mockups to verify selections made under Sample submittals and to demonstrate aesthetic effects and set quality standards for fabrication and installation.

1.5 DELIVERY, STORAGE AND HANDLING

A. Deliver materials to site in Manufacturer's original, unopened packaging, with labels clearly identifying product name and manufacturer.

B. Store materials in accordance with the Manufacturer's instructions in unopened packaging until ready for installation. Store materials in a covered area, away from water, on a flat, level surface with adequate support to prevent sagging according to manufacturer's instructions.

C. Protect materials during handling to prevent damage.

1.6 PROJECT CONDITIONS

A. Field Measurements: Verify actual measurements before fabrication; show recorded measurements on shop drawings. Coordinate field measurements and fabrication schedule with construction progress to avoid construction delays.

B. Open boxes and remove components from packaging; stack flat with spacers between the pieces in their final environment for a minimum 3 to 4 days prior to installation.

C. Do not install cladding material under environmental conditions where it is likely to be immersed in water, or where the temperature is likely to exceed 120 degrees Fahrenheit for extended periods of time.

1.7 WARRANTY

A. Special Warranty: Manufacturer's standard form in which manufacturer agrees to repair or replace components of composite panels and sub-framing systems that fail in materials or workmanship within specified warranty period.

1. Failures including but not limited to the following:
   a. Deterioration resulting from U.V. and weather exposure,
   b. Structural failures including rupturing, cracking, or puncturing.
   c. Deterioration of materials beyond normal weathering.
2. Provide warranty covering panel fabrication defects and loss of specified physical and performance properties, when panels are installed in accordance with manufacturer's requirements.
3. Provide warranty covering cost of panel removal and installation of replacement panels.
4. Warranty Period: 10 years.

PART 2 PRODUCTS

2.1 COMPOSITE PANEL SYSTEM

A. (CPNL-1) and (CPNL-3) Composite Panel System for Exterior Applications: Provide complete system including composite panels and extruded aluminum sub-framing.

1. Basis of Design Products and Manufacturer:
   a. Panels:
      1) (CPNL-1): Trespa Meteon FR by Trespa North America.
         (a) Color: Carmine Red.
      2) (CPNL-3): Trespa Meteon Uni by Trespa North America.
         (a) Finish: Diffuse, Color: Mid Grey Satin
   b. Sub-Framing: Trespa TS110-285 - Exposed fastening on fixed depth aluminum sub-framing tested and meeting the performance requirements of NFPA 285.
2. Other Products and Manufacturers: Subject to specified requirements, provide equivalent product as approved by District prior to Bid.

B. (CPNL-2) Composite Panel System for Interior Applications: Provide complete system including composite panels and extruded aluminum sub-framing.

1. Basis of Design Product and Manufacturer:
   a. Panels: Trespa Virtuon by Trespa North America.
   b. Color: Elegant Oak.
   c. Sub-Framing: Trespa TS110-285 - Exposed fastening on fixed depth aluminum sub-framing tested and meeting the performance requirements of NFPA 285.
2. Other Products and Manufacturers: Subject to specified requirements, provide equivalent product as approved by District prior to Bid.

C. Composite Panels: Solid phenolic panel composed of thermosetting resins, homogenously reinforced with wood-based fibers and an integrated decorative surfaces, under high pressure and high temperature; and as follows:

1. Panel Properties:
   a. Thickness: 3/8 inch, minimum.
   b. Backing: Provide balance sheet on concealed face of panel.

c. Core: Phenolic resin, type FR fire retardant, black color.
d. Flatness: Maximum difference of 0.08 inch for 3 foot span.
e. Finishes and Colors: Refer to Material Identification Codes.

D. Fasteners for Panels: Provide corrosion resistant stainless steel, Type 316, mechanical fasteners meeting panel manufacturer's requirements for fasteners to be used with metal mounting frame.
   1. Provide Powder coat finish matching panel color, as selected.

E. Sub-Framing and Accessories: Provide framing and accessories by panel Manufacturer or as approved by panel Manufacturer.
   1. Sub-Framing: Extruded aluminum sub-framing assembly as recommended by composite panel Manufacturer.
   2. Clips: As recommended by panel manufacturer and as required to meet performance requirements.
   3. Fasteners for Framing: Of type, material, size, corrosion resistance, holding power, and other properties required to fasten miscellaneous metal framing members to substrates.
   4. Ventilated Closure: Type recommended by panel Manufacturer, in color as selected by rchitect from standard color range.

2.2 FABRICATION

A. Fabricate panels, components and accessory items in accordance with manufacturer's recommendations, specified requirements and accepted submittals.

B. Fabricate panels to profile indicated. Prefabricate as much as practical in shop prior to shipping materials to site.

C. Appearance: Panel lines, breaks, and angles shall be sharp, true, and surfaces free from warp and buckle.

PART 3 EXECUTION

3.1 EXAMINATION

A. Do not begin installation until substrates have been properly prepared.

B. If substrate preparation is the responsibility of another installer, notify Architect of unsatisfactory preparation or alignment; do not proceed until unsatisfactory conditions are corrected.

C. Verify compatibility of different metallic surfaces in contact with each other to protect against electro-chemical corrosion.

D. Verify moisture barrier and each wall system component is properly installed and substrate wall assembly is ready for Work of this Section.

E. Commencement of Work of this Section means substrate wall conditions are acceptable and meet panel system manufacturer's warranty requirements. Refer to manufacturer's guide.

3.2 PREPARATION

A. Follow panel and mounting frame manufacturer's preparation requirements.

B. Metal Protection:
   1. Where dissimilar metals contact each other or corrosive substrates, protect against galvanic action as recommended in writing by metal panel manufacturer.
   2. Protect metal surfaces in contact with concrete, masonry mortar, plaster or other cementitious surface with isolation coating.

C. Comply with manufacturer's instruction on tools and methods to use for cutting and drilling panels.

3.3 INSTALLATION

A. Compliance: Comply with manufacturer's product data, including product technical bulletins, product catalog installation instructions, product carton instructions for installation, and accepted shop drawings. Install true, plumb, square and level.

B. Install panels and mounting and fastening system so panel is not deformed, stressed or damaged. Installer will be responsible for damage or deterioration resulting from improper installation for not following installation requirements of manufacturer and information resulting from mock-up and pre-installation meetings.

C. Install panels to maintain design criteria and performance requirements and in accordance with manufacturer's installation instructions, including maintaining open joints as specified.

1. Joints: Maintain 3/8 inch of free space for panel movement.
2. Coordinate exact sizes and dimensions with Drawings, field conditions and approved shop drawings.

D. Install fasteners using drivers provided by panel manufacturer which are pre-set to proper torque.

E. Install ventilated closure at perimeter of panel system, as shown.

3.4 CLEANING

A. After installation is complete remove protective coating on each panel and wipe panels following manufacturer's cleaning instructions.

B. Clean in accord with panel manufacturer's written instructions.

C. Remove construction debris from project site and legally dispose of debris.

3.5 PROTECTION

A. Protection: Protect installed surfaces from damage, dirt and debris during construction.

END OF SECTION

SECTION 075500

MODIFIED BITUMINOUS MEMBRANE ROOFING

Re-Issued, Addendum #2, 09/01/2017

PART 1 — GENERAL

1.1 RELATED DOCUMENTS

A. Drawings and general provisions of the Contract, including the Conditions of the Contract and Division 01 Specification Sections apply to this Section.

B. Provide all labor, equipment, and materials to install a complete roofing system over the properly prepared substrate.

C. Contractor must submit certified applicator letter from roofing manufacturer with bid stating that roofing contractor is certified to install specified roofing system.

1.2 SUMMARY

A. Section includes modified bituminous roofing system (MBIT-1) and accessories on all built up roofing sections.

1. Install specified insulation and crickets per plans and details with appropriate coverboard and attach per ASCE 7-05 wind uplift requirements. Coordinate with insulation specification. If no insulation is required on top of deck, mechanically fasten one layer of Type II base sheet – HPR Glasbase.

2. Install two layers of Type IV felts – HPR Glasfelts- in Type III hot asphalt.

3. Install an additional layer of Stressply EUV smooth sheet in hot asphalt in all base flashings, drains, and as a target sheet on all penetrations.

4. Install Stressply Plus FR Mineral capsheet over the entire roof surface in Type III hot asphalt

5. Install Stressply IV UV Plus Mineral Title 24 compliant torch sheet on all vertical walls and base flashings using roofer's torch to adhere. Torch applied sheet must be Title 24 compliant with no factory or field coating applied, Title 24 surface to be bright white minerals.

6. New soft zinc ZinkJak flashings must be used in all drains and pipe penetrations, clamp and caulk per specification.

7. Any mechanical units that sit on solid curbs need to be roofed up and over to make a complete watertight system and then have a new 22ga galvanized metal pan installed before the unit is set in place. All metal seams to be fully soldered.

8. Once roofs are complete and inspected by District and Manufacturer, clean roofs thoroughly with blowers and brooms. Coat all roof sections with 2 gallons per square of White Star polyurea and embed 300 lbs of Title 24

bright white gravel into polyurea while the coating is being applied and still wet.

9. Place all conduits on new redwood blocking and secure with clamps. Blocking should be adhered to a 1/2" thick walkpad from bottom side using mastic. Walkpads under blocking to free float on top of roofing system.

10. Install new 22ga Kynar coated metal for all coping and edge metal. Attach coping cap using continuous clip on outside perimeter and fastening inside edge every 24" O.C. with grommet screws. Metal must be supplied by the membrane manufacturer to qualify for the 30-year edge-to-edge warranty.

1.3 REFERENCES

A. American Society of Civil Engineers (ASCE):

1. ASCE 7-05, Minimum Design Loads for Buildings and Other Structures.

B. American Society for Testing and Materials (ASTM):

1. ASTM D41 Standard Specification for Asphalt Primer Used in Roofing, Dampproofing and Waterproofing.

2. ASTM D312 Standard Specification for Asphalt Used in Roofing.

3. ASTM D451 Standard Test Method for Sieve Analysis of Granular Mineral Surfacing for Asphalt Roofing Products.

4. ASTM D2822 Standard Specification for Asphalt Roof Cement.

5. ASTM D5147 Standard Test Method for Sampling and Testing Modified Bituminous Sheet Materials.

6. ASTM D6162 Standard Specification for Styrene Butadiene Styrene (SBS) Modified Bituminous Sheet Materials Using a Combination of Polyester and Glass Fiber Reinforcements.

7. ASTM D6163 Standard Specification for Styrene Butadiene Styrene (SBS) Modified Bituminous Sheet Materials Using Glass Fiber Reinforcements.

8. ASTM E108 Standard Test Methods for Fire Test of Roof Coverings.

C. National Roofing Contractors Association (NRCA):

1. Roofing and Waterproofing Manual.

1.4 SUBMITTALS PRIOR TO AWARD

A. Manufacturer's Installation Instructions: Submit installation instructions and recommendations indicating special precautions required for installing the membrane.

B. Manufacturer's Certificate: Certify that roof system furnished has a class A fire rating.

C. Manufacturer's Certificate: Provide calculations by an engineer that the roof system is adhered/fastened properly to meet or exceed the requirements of ASCE 7-10 wind uplift requirements.

D. Manufacturer's Certificate: Certify that materials are manufactured in the United States and conform to requirements specified herein, are chemically and physically compatible with each other, and are suitable for inclusion within the total roof system specified herein.

E. Manufacturer's Certificate: Submit a certified copy of the roofing manufacturer's ISO 9001 compliance certificate.

F. Test Reports: Submit test reports, prepared by an independent testing agency, for all modified bituminous sheet roofing, this testing must show that sheets meet all minimum tensile, tear, and elongation requirements set forth as the standard in this specification.

G. Written certification from the roofing system manufacturer certifying the applicator is currently authorized for the installation of the specified roof system.

H. Written certification from roofing system manufacturer that all materials including miscellaneous items not supplied by said manufacturer will be fully covered under the 30 year NDL Edge to Edge warranty with no exceptions. This includes insulation, fasteners, and asphalt.

I. Certification that polyurea coating and gravel top surface are Title 24 compliant.

J. Qualification data for firms and individuals identified in Quality Assurance Article below.

K. Specimen Warranty: Provide an unexecuted copy of the 30-year NDL Edge to Edge warranty specified for this Project, identifying the terms and conditions required of the Manufacturer and the Owner. Warranty must be a no dollar limit warranty, must be non pro-rated, must cover both labor and all materials including insulation and all accessories including all metal flashings (coping, edge metal, counterflashing, etc), and must not have any renewal periods to achieve the full 30-year warranty period.

L. Provide samples of warranties for all built up roofing, metal roofing, and metal wall panels from the same manufacturer. Provide a notarized letter from an officer of the manufacturing company stating that they will warranty all roof systems and cover all transitions between each roofing system.

M. Notarized letter from an officer of the manufacturing company stating that they will provide daily inspections from a full time employee of the company for a minimum of 1 hour, three days per week with photographic reports daily to the owner.

N. Provide documentation that the manufacture has been in business longer than the specified warranty period (30 years).

1.5 CONTRACT CLOSEOUT SUBMITTALS

A. General: Comply with Requirements of Division 01 Section - Closeout Submittals.

B. Special Project Warranty: Provide 30 year NDL Edge to Edge material and labor warranty as stated in 1.4, K for the Project, executed by the authorized agent of the Manufacturer.

C. Roofing Maintenance Instructions. Provide a manual of manufacturer's recommendations for maintenance of installed roofing systems.

D. Demonstration and Training Schedule: Provide a schedule of proposed dates and times for instruction of Owner's personnel in the maintenance requirements for completed roofing work. Refer to Part 3 for additional requirements.

1.6 QUALITY ASSURANCE

A. Manufacturer Qualifications: Company specializing in manufacturing the products specified in this Section with not less than 30 years documented experience and have ISO 9001 certification.

B. Installer Qualifications: Company specializing in modified bituminous roofing installation with not less than 5 years experience and authorized by roofing system manufacturer as qualified to install manufacturer's roofing materials.

C. Installer's Field Supervision: Maintain a full-time Supervisor/Foreman on job site during all phases of roofing work while roofing work is in progress. Maintain proper supervision of workmen.

D. Maintain a copy of the Contract Documents in the possession of the Supervisor/Foreman and on the roof at all times.

E. Source Quality Control: Manufacturer shall have in place a documented, standardized quality control program such as ISO-9001.

F. Manufacturer cannot be in or have been in bankruptcy (Chapter 7 or Chapter 11) in the last ten (10) years.

G. Manufacturer must have been in business for as long as the warranty is to last (30 years).

1.7 PRE-INSTALLATION CONFERENCE

A. Pre-Installation Roofing Conference: Convene a pre-roofing conference approximately two (2) weeks before scheduled commencement of modified bituminous roofing system installation and associated work.

B. Require attendance of installer of each component of associated work, installers of deck or substrate construction to receive roofing work, installers of rooftop units and other work in and around roofing that must precede or follow roofing work (including mechanical work if any), Architect, Owner, roofing system manufacturer's representative, and other representatives directly concerned with performance of the Work, including (where applicable) Owner's insurers, testing agencies and governing authorities. Objectives of conference include:

1. Review foreseeable methods and procedures related to roofing work, including set up and mobilization areas for stored material and work area.

2. Tour representative areas of roofing substrates (decks), inspect and discuss condition of substrate, roof drains, curbs, penetrations and other preparatory work performed by others.

3. Review structural loading limitations of deck and inspect deck for loss of flatness and for required attachment.

4. Review roofing system requirements (drawings, specifications and other contract documents).

5. Review required submittals both completed and yet to be completed.

6. Review and finalize construction schedule related to roofing work and verify availability of materials, installer's personnel, equipment and facilities needed to make progress and avoid delays.

7. Review required inspection, testing, certifying and material usage accounting procedures.

8. Review weather and forecasted weather conditions and procedures for coping with unfavorable conditions, including possibility of temporary roofing (if not mandatory requirement).

9. Record discussion of conference including decisions and agreements (or disagreements) reached and furnish copy of record to each party attending. If substantial disagreements exist at conclusion of conference, determine how disagreements will be resolved and set date for reconvening conference.

10. Review notification procedures for weather or non-working days.

C. The intent of the conference is to resolve issues affecting the installation and performance of roofing work. Do not proceed with roofing work until such issues are resolved to the satisfaction of the Owner. This shall not be construed as interference with the progress of Work on the part of the Owner.

1.8 DELIVERY, STORAGE AND HANDLING

A. Contractor responsible to coordinate delivery of products to site with seals and labels intact, in manufacturer's original containers, dry and undamaged.

B. Store and handle roofing sheets in a dry, well-ventilated, weather-tight place to prevent moisture exposure. Store rolls of felt and other sheet materials on pallets or other raised surface. Stand all roll materials on end. Cover roll goods with a canvas tarpaulin or other breathable material (not polyethylene).

C. Do not leave unused materials on the roof overnight or when roofing work is not in progress unless protected from weather and other moisture sources.

D. Secure all material and equipment on the job site. If any material or equipment is stored on the roof, assure that the integrity of the deck is not compromised at any

time. Damage to the deck caused by the Contractor's actions will be the sole responsibility of the Contractor, and the deck will be repaired or replaced at his expense.

1.9 MANUFACTURER'S DUTIES

A. When the Project is in progress, the roofing system manufacturer will provide the following to all interested parties including Owner, Architect, and Construction Manager:

1. Report progress and quality of the work as observed.

2. Provide job site inspections with photographic reports 5 days per week for a minimum of one hour when contractor is on site.

3. Report to the Owner in writing any failure or refusal of the Contractor to correct unacceptable practices called to the Contractor's attention.

4. Confirm after completion that manufacturer has observed no application procedures in conflict with the specifications other than those that may have been previously reported and corrected.

1.10 PROJECT CONDITIONS

A. Proceed with roofing work only when existing and forecasted weather conditions will permit a unit of work to be installed in accordance with manufacturer's recommendations and warranty requirements.

B. Do not apply roofing insulation or membrane to damp deck surface.

C. Do not expose materials subject to water or solar damage in quantities greater than can be weatherproofed during same day.

D. All slopes greater than 2:12 require back-nailing to prevent slippage of the ply sheets. Use ring or spiral-shank one (1) inch cap nails, or screws and plates at a rate of one (1) fastener per ply (including the membrane) at each insulation stop. Place insulation stops at 16 feet on center. for slopes less than 3:12 and four (4) feet on center. for slopes greater than 3:12. On non-insulated systems, nail each ply directly into the deck at the rate specified above. When slope exceeds 2:12, install all plies parallel to the slope (strapping) to facilitate backnailing. Install four (4) additional fasteners at the upper edge of the membrane when strapping the plies.

1.11 SEQUENCING AND SCHEDULING

A. Sequence installation of roofing with related units of work specified in other Sections to ensure that roof assemblies, including roof accessories, flashing, trim and joint sealers, are protected against damage from effects of weather, corrosion and adjacent construction activity.

1.12 WARRANTY

A. Upon completion of installation, and acceptance by the Owner, the Manufacturer will supply to the Owner a 30 year No Dollar Limit Edge to Edge warranty, this

warranty must cover all roofing, walls, flashings, metal edge, coping, and transitions in between each roof section. Warranty must be non-prorated and must cover all labor and all materials installed from the deck up. No renewals can be included, must be a full 30-year warranty.

B. Installer will submit a five (5) year warranty to the membrane manufacturer with a copy directly to Owner to include installation of all components of the roofing system, including insulation and all metal flashing work.

C. Same roofing manufacturer must warranty all built up roofing, metal roofing, and metal wall panels including all transitions.

PART 2 — PRODUCTS

2.1 PRODUCTS, GENERAL

A. Basis of Design: Materials, manufacturer's product designations, and/or manufacturer's names specified herein shall be regarded as the minimum standard of quality required for work of this Section. Comply with all manufacturer and contractor/fabricator quality and performance criteria specified in Part 1.

B. Substitutions: Products proposed as equal to the products specified in this Section shall be submitted in accordance the following and must include all items from Section 1.4 and 1.6.

1. Proposals shall be accompanied by a copy of the manufacturer's standard specification Section. That specification Section shall be signed and sealed by a professional engineer licensed in the state in which the installation is to take place. Substitution requests containing specifications without licensed engineer certification shall be rejected for non-conformance.

2. Include a list of three (3) projects of similar type and extent, located within a one-hundred-mile radius from the location of the project. In addition, the three projects must be at least five (5) years old and be available for inspection by Owner or Owner's Representative.

3. Equivalency of performance criteria, warranty terms, submittal procedures, and contractual terms will constitute the basis of acceptance. A spread sheet comparing all items will need to be submitted with substitution request.

4. The District's decision regarding substitutions will be considered final. Unauthorized substitutions will be rejected.

5. All substitution requests must be submitted 10 days before bids are due. This allows for all bidders the chance to bid the same substituted product and offers all bidders a fair bidding field. All substitutions submitted after this period will be rejected.

2.2 ACCEPTABLE MANUFACTURERS

A. The basis of design is roofing systems engineered and manufactured by The Garland Company or District approved equal:

The Garland Company
3800 East 91st Street
Cleveland, Ohio 44105
Steve Lampman (949) 322-1770
Pete Cochran (949) 295-0447
Website: www.garlandco.com

2.3 DESCRIPTION

A. (MBIT-1) Modified bituminous roofing work including but not limited to:

1. Type II base sheet: HPR Glasbase

2. Minimum two (2) plies of HPR Glasfelt, ASTM D2178, Type IV glass fiber roofing felt bonded to prepared substrate with hot bitumen;

2. Hot Bitumen: Trumbull, lo-odor Type III steep asphalt having the following characteristics:

a. Softening Point 185°F - 205°F

b. Flash Point 500°F

c. Penetration @ 77°F 15-35 units

d. Ductility @ 77°F 2.0 cm

3. Base Flashing Ply: For base flashings and target sheets; One (1) ply of Stressply EUV; 115 mil SBS and SIS (Styrene-Butylene-Styrene and Styrene-Isoprene-Styrene) rubber modified roofing membrane incorporating post consumer recycled rubber, fire retardant characteristics and reinforced with a fiberglass and polyester composite scrim set in hot asphalt and covered by an additional layer of torch applied modified bitumen mineral surface (Stressply IV UV Plus Mineral) 195 mil membrane.

4. Modified Base Flashing Capsheet Membrane: Stressply IV UV Plus Mineral; 195 mil SBS (Styrene-Butadiene- Styrene) mineral surfaced rubber modified roofing membrane with a fiberglass and polyester composite scrim. This membrane is designed for torch applications and has a burn-off backer that indicates when the material is hot enough to be installed. Title 24 compliant with no factory or field coating applied, Title 24 surface to be bright white minerals

5. Modified Mineral Surface Capsheet Field Membrane: Stressply Plus FR Mineral - Environmentally Friendly; 155 mil SBS (Styrene-Butylene-Styrene) rubber modified roofing membrane incorporating recycled rubber, fire retardant characteristics and reinforced with a fiberglass and polyester composite scrim covered by an additional layer of mineral surface modified bitumen membrane.

6. Surfacing: Apply White Star on all field sections, embed 300lbs per square of white Title 24 gravel as specified immediately while wet.

2.4 BITUMINOUS MATERIALS

A. Asphalt Primer: Garla Prime; V.O.C. compliant, ASTM D41.

B. Roofing Mastic: Flashing Bond, ASTM D 4586, Type II, Class I

C. Interply Adhesive: ASTM D312, Type III, low odor

2.5 SHEET MATERIALS

A. Felt Plies: HPR Glasfelts, ASTM D2178, Type IV

B. Modified Base Flashing Torch Capsheet Membrane Properties (Finished Membranes): Stressply IV UV Plus Mineral; ASTM D6162, Type III Grade G

1. Tensile Strength (ASTM D5147)
   a. 2 in/min. @ 73.4 ± 3.6°F MD 310 lbf/in CMD 310 lbf/in
2. Tear Strength (ASTM D5147)
   a. 2 in/min. @ 73.4 ± 3.6°F MD 510 lbf CMD 510 lbf
3. Elongation at Maximum Tensile (ASTM D5147)
   a. 2 in/min. @ 73.4 ± 3.6°F MD 6.0% CMD 6.0%
4. Low Temperature Flexibility (ASTM D5147): Passes -40°F
5. Title 24 compliant with no factory or field coating applied, Title 24 surface to be bright white minerals

C. Modified Mineral Surface Capsheet Field Membrane; Properties (Finished Membranes): Stressply Plus FR Mineral; ASTM D6162, Type III Grade G

1. Tensile Strength (ASTM D5147)
   a. 2 in/min. @ 73.4 ± 3.6°F MD 310 lbf/in CMD 310 lbf/in
2. Tear Strength (ASTM D5147)
   a. 2 in/min. @ 73.4 ± 3.6°F MD 500 lbf CMD 500 lbf
3. Elongation at Maximum Tensile (ASTM D5147)
   . 2 in/min. @ 73.4 ± 3.6°F MD 3.5% CMD 3.5%
4. Low Temperature Flexibility (ASTM D5147): Passes -30°F
5. Pre consumer recycled content 11%
6. Post consumer recycled content 0.3%

D. Modified Base Flashing Ply Membrane: Properties (Finished Membranes): Stressply EUV; ASTM D6162, Type III

1. Tensile Strength (ASTM D5147)
   a. 2 in/min. @ 73.4 ± 3.6°F MD 700 lbf/in CMD 750 lbf/in
2. Tear Strength (ASTM D5147)
   a. 2 in/min. @ 73.4 ± 3.6°F MD 1300 lbf CMD 1400 lbf
3. Elongation at Maximum Tensile (ASTM D5147)
   a. 2 in/min. @ 73.4 ± 3.6°F MD 6.0% CMD 6.0%

4. Low Temperature Flexibility (ASTM D5147): Passes -30°F

2.6 SURFACINGS

A. Polyurea Flood Coat Adhesive: White Star; one-component, flexible, low odor, polyurea roof adhesive top coat. Performance Requirements:

1. Non-Volatile Content ASTM D2369 89%
2. Density @ 77 degrees F: 10.14 lbs/gal
3. Tensile Strength (ASTM D412) 2300-2600 psi
4. Tear Strength (ASTM 230-280 lbs./in.)
5. Elongation (ASTM D 412) 250-300%
6. Flash point ASTM D93 120 degrees F
7. Reflectance 88%
8. SRI 112

B. Roofing gravel surface to be 300lbs per square of bright white Title 24 gravel.

2.7 RELATED MATERIALS

A. Flashing and Sheet Metal: Kynar Coated, steel.

1. Coordinate with Section 07 60 00, to be provided by roofing membrane manufacturer to qualify for specified Manufacturer's edge-to-edge 30 year NDL warranty.

B. Nails and Fasteners: Non-ferrous metal or galvanized steel, except that hard copper nails shall be used with copper; aluminum or stainless steel nails shall be used with aluminum; and stainless steel nails shall be used with stainless steel. Fasteners shall be self-clinching type of penetrating type as recommended by the manufacturer of the deck material. Nails and fasteners shall be flush-driven through flat metal discs of not less than one (1) inch diameter. Omit metal discs when one-piece composite nails or fasteners with heads not less than one (1) inch diameter are used.

C. Metal Discs: Flat discs or caps of zinc-coated sheet metal not lighter than twenty eight (28) gauge and not less than one (1) inch in diameter. Form discs to prevent dishing. Bell or cup shaped caps are not acceptable.

D. Walkway Pads: Walkpads by WR Meadows; Factory formed, nonporous, with a slip-resisting surface texture, manufactured specifically for adhering to modified bituminous membrane roofing as a protection course for foot traffic, of the following thickness:

1. 1/2" thick.

2. To be installed around roof hatch and around all units unless shown in more locations on plans.

E. Walkway Pad Adhesive: Flashing Bond mastic.

F. Glass Fiber Cant: Continuous triangular cross Section made of inorganic fibrous glass used as a cant strip as recommended by the membrane manufacturer.

G. Drain Flashings and pipe jacks: ZincJak; should be new lead free soft sheet zinc formed and rolled. ZincJak info: zincjac@com-innov.com, 888-744-3439

1. Density 0.258 lbs/in
2. Melting point 786 degrees F
3. Tensile Strength (ksi) 10-22

PART 3 — EXECUTION

3.1 EXECUTION, GENERAL

A. Comply with requirements of Division 01 Section "Common Execution Requirements."

3.2 EXAMINATION

A. Verify that deck surfaces and project conditions are ready to receive work of this Section.

B. Verify that deck is supported and secured to structural members.

C. Verify that deck is clean and smooth, free of depressions, projections or ripples, and is properly sloped to drains.

D. Verify that adjacent roof substrate components do not vary more than ¼ inch in height.

E. Verify that deck surfaces are dry

F. Verify that openings, curbs, pipes, conduit, sleeves, ducts, and other items which penetrate the roof are set solidly, and that cant strips, wood nailing strips, and reglets are set in place.

3.3 GENERAL INSTALLATION REQUIREMENTS

A. Cooperate with manufacturer, inspection and test agencies engaged or required to perform services in connection with installing the roof system.

B. Insurance/Code Compliance: Where required by code, install and test the roofing system to comply with governing regulation and specified insurance requirements.

C. Protect other work from spillage of roofing materials and prevent materials from entering or clogging drains and conductors. Replace or restore other work damaged by installation of the modified bituminous roofing system.

D. Coordinate installation of roofing system components so that insulation and roofing plies are not exposed to precipitation or left exposed overnight. Provide cut-offs at end of each day's work to cover exposed ply sheets and insulation with two (2) plies of #15 organic roofing felt set in full moppings of bitumen and with

joints and edges sealed with roofing cement. Remove cut-offs immediately before resuming work.

E. Asphalt Bitumen Heating: Heat and apply bitumen in accordance with the Equiviscous Temperature (EVT) Method as recommended by National Roofing Contractors Association (NRCA). Do not raise temperature above minimum normal fluid-holding temperature necessary to attain EVT (plus 5°F at point of application) more than one (1) hour prior to time of application. Determine flash point, finished blowing temperature, EVT, and fire-safe handling temperature of bitumen either from information by manufacturer or by suitable test. Do not exceed recommended temperature limits during bitumen heating. Do not heat to a temperature higher than twenty-five degrees (25°F) below flash point. Discard bitumen that has been held at temperature exceeding Finishing Blowing Temperature (FBT) for more than three (3) hours. Keep kettle lid closed except when adding bitumen.

F. Asphalt Bitumen Mopping Rate:

1. Interply Mopping: Apply bitumen at the rate of approximately twenty-five (25) lb.(11.3kg) of bitumen per roof square.

2. Modified Membrane Mopping: Apply bitumen at the rate of approximately thirty (30) lb (13.6kg). of bitumen per roof square.

G. Substrate Joint Penetrations: Prevent bitumen from penetrating substrate joints, entering building, or damaging roofing system components or adjacent building construction.

H. Apply roofing materials as specified by manufacturer's instructions.

1. Keep roofing materials dry before and during application.

2. Complete application of roofing plies, modified sheet and flashing in a continuous operation.

3. Begin and apply only as much roofing in one day as can be completed that same day.

I. Cut-Offs (Waterstops): At end of each day's roofing installation, protect exposed edge of incomplete work, including ply sheets and insulation. Provide temporary covering of two (2) plies of #15 organic roofing felt set in full moppings of bitumen with joints and edges sealed.

J. Broadcast minerals into the bleed out of bitumen while bitumen is at its recommended EVT temperature to achieve uniform color throughout.

3.4 FELT PLY INSTALLATION

A. Fiberglass Plies: Install two (2) fiberglass ply sheets in twenty-five (25) lbs (11.3kg) per square of bitumen shingled uniformly to achieve two plies over the entire prepared substrate. Shingle in direction of slope of roof to shed water on each area of roof. Do not step on felt rolls until asphalt has cooled, fish mouths should be cut and patched.

B. Lap ply sheet ends eight (8) inches (203mm). Stagger end laps twelve (12) inches (304mm) minimum.

C. Lightly broom in fiberglass plies to assure complete adhesion.

D. Extend plies two (2) inches (50mm) beyond top edges of cants at wall and roof projections and equipment bases.

3.5 MODIFIED MEMBRANE APPLICATION

A. Solidly bond the modified membrane to the base layers with specified asphalt at the rate of thirty (30) lbs. (11-13kg) per 100 square feet.

B. The modified membrane roll must have asphalt slightly visible at all side laps. Exercise care during application to eliminate air entrapment under the membrane.

C. Apply pressure to all seams to ensure that the laps are solidly bonded to substrate.

D. Install subsequent rolls of modified membrane across the roof as above with a minimum of four (4) inch (101mm) side laps and eight (8) inch (203mm) end laps. Stagger the end laps. Apply the modified membrane in the same direction as the previous layers but stagger the laps so they do not coincide with the laps of the base layers.

E. Extend membrane two (2) inches (50mm) beyond top edge of all cants in full moppings of the specified asphalt.

3.6 FLASHING MEMBRANE INSTALLATION

A. Seal all curb, wall and parapet flashings with an application of mastic and mesh on a daily basis. Do not permit conditions to exist that will allow moisture to enter behind, around or under the roof or flashing membrane.

B. Prime any concrete walls or curbs with 1 gallon per square of asphalt primer.

C. Install base flashing ply covering entire wall and wrapped over the top of the parapet wall, extended to outside edge of wall, with six (6) inches on to field of the roof and set in hot asphalt. Nail membrane at eight (8) inches on center.

D. Install a second ply of torch applied modified mineral surface base flashing capsheet membrane over the base flashing ply, nine (9) inches on to the field of the roof. Attach a termination bar attached every 16” on concrete walls and 8” on wood walls. Solidly adhere the entire sheet of flashing membrane to the substrate.

E. Coordinate counter flashing, cap flashings, expansion joints, and similar work with modified bitumen roofing work.

F. Coordinate roof accessories, miscellaneous sheet metal accessory items, including piping vents and other devices with the roofing system work as specified in other Sections.

G. Coping Cap :

1. Prime vertical wall at a rate of one hundred (100) square feet per gallon and allow to dry.

2. Set cant in bitumen. Run all field plies over cant a minimum of two (2) inches.

3. Install base flashing ply covering entire wall and wrapped over top of wall to outside edge of exterior wall with six (6) inches on to field of the roof and set in hot asphalt. Nail membrane at eight (8) inches on center.

4. Install a torch applied modified mineral surface base flashing capsheet membrane over the base flashing ply, nine (9) inches on to the field of the roof.

5. Install coping cap with continuous outside clip and fasten on the inside edge every twenty-four (24) inches on center.

H. Equipment Support

1. Prime vertical concrete or gypsum board at a rate of one hundred (100) square feet per gallon and allow to dry.

2. Set cant in bitumen. Run all field plies over cant a minimum of two (2) inches.

3. Install base flashing ply covering curb with six (6) inches on to field of the roof.

4. Install torch applied modified mineral surface base flashing capsheet membrane over the base flashing ply, nine (9) inches on to the field of the roof. Attach top of membrane to top of curb and fasten at eight (8) inches o.c. where unit can not be lifted. Roof up and over entire curb of HVAC units unless unit is a downdraft unit. Replace pans with new 22ga fully soldered galvanized metal.

5. Install new slip metal under existing curbs with equipment that is not to be lifted. Fasten at twelve (12) inches on center with fasteners and neoprene washers. All joints in metal shall be sealed to be water tight. Replace pans completely with new where specified elsewhere in this specification.

I. Exhaust Fan

1. Minimum curb height is eight (8) inches. Prime vertical at a rate of one hundred (100) square feet per gallon and allow to dry.

2. Set cant in bitumen. Run all plies over cant a minimum of two (2) inches.

3. Install base flashing ply covering curb with six (6) inches on to field of the roof.

4. Install torch applied modified mineral surface base flashing capsheet membrane installed over the base flashing ply, nine (9) inches on to field of the roof. Attach top of membrane to top of curb and fasten at eight (8) inches on center.

5. Install metal exhaust fan over the fasteners and flashing to act as counterflashing. Fasten per manufacturer's recommendation.

J. Passive Vent/Air Intake

1. Minimum curb height is eight (8) inches. Prime vertical at a rate of one hundred (100) square feet per gallon and allow to dry.

2. Set cant in bitumen. Run all plies over cant a minimum of two (2) inches.

3. Install base flashing ply covering curb with six (6) inches on to the field of the roof.

4. Install torch applied modified mineral surface base flashing capsheet membrane installed over the base flashing ply, nine (9) inches on to field of the roof. Attach top of membrane to top of curb and attach at eight (8) inches on center.

5. Install passive vent/air intake over the fasteners and flashing to act as counterflashing. Fasten per manufacturers recommendations.

K. Roof Drain

1. Plug drain to prevent debris from entering plumbing.

2. Run roof system plies over drain. Cut out plies inside drain bowl.

3. Set zinc flashing (thirty (30) inch square minimum) in (¼) inch bed of mastic. Run zinc into drain a minimum of two (2) inches. Prime zinc at a rate of one hundred (100) square feet per gallon and allow to dry.

4. Install target sheet ply (forty (40) inch square minimum) in bitumen.

5. Install modified smooth membrane for field (forty-eight (48) inch square minimum) in bitumen.

6. Install clamping ring and assure that all plies are under the clamping ring.

7. On drain boxes, nail flange over target ply, staggered and primed. Do not create a dam at flange which would inhibit flow to drain. Run base plies short of drain and cap sheet to drain edge.

8. Install all new cast iron drain covers on all drains and overflows.

L. Plumbing Stack

1. Minimum stack height is twelve (12) inches.

2. Prime flange of new ZincJak flashing. Install properly sized ZinkJak set in (¼) inch bed of roof cement over roof plies.

3. Install target sheet ply in bitumen.

4. Install modified smooth membrane for field in bitumen.

5. Caulk the intersection of the membrane with elastomeric sealant.

6. Turn sleeve a minimum of one (1) inch down inside of stack or clamp at top, farrow out top edge, and seal with Tuff Stuff caulking.

M. Heat Stack

1. Minimum stack height is twelve (12) inches.

2. Prime flange of new sleeve. Install properly sized sleeves set in (¼) inch bed of roof cement over roof plies.

3. Install target sheet ply in bitumen.

4. Install modified smooth membrane for field in bitumen.

5. Caulk the intersection of the membrane with elastomeric sealant.

6. Install new collar over cape. Weld collar or install stainless steel draw brand.

3.7 APPLICATION OF SURFACING

A. Reflective Coating:

1. Allow all cold applied mastics and coating to properly dry and cure before installing the coating. Roof must be clean, free of dirt, dust, debris and dry.

2. Coat field of roof with two (2) gallons of cold process white polyrea (White star) and uniformly embed 300lbs of Title 24 bright white gravel into coating while wet.

3.8 FIELD QUALITY CONTROL

A. Perform field inspection and testing as required

B. Correct defects or irregularities discovered during field inspection.

C. A copy of the specification should also be on site at all times.

3.9 CLEANING

A. Remove bitumen adhesive drippings from all walls, windows, floors, ladders and finished surfaces.

B. In areas where finished surfaces are soiled by asphalt or any other sources of soiling caused by work of this Section, consult manufacturer of surfaces for cleaning instructions and conform to their instructions.

C. Repair or replace defaced or disfigured finishes caused by work of this Section.

3.10 CONSTRUCTION WASTE MANAGEMENT

A. Remove and properly dispose of waste products generated during roofing procedures. Comply with requirements of authorities having jurisdiction.

3.11 FINAL INSPECTION

A. At completion of roofing installation and associated work, meet with Contractor, Architect, installer, installer of associated work, Owner, roofing system manufacturer's representative, and other representatives directly concerned with performance of roofing system.

B. Walk roof surface areas of the building, inspect perimeter building edges as well as flashing of roof penetrations, walls, curbs and other equipment. List all items requiring correction or completion and furnish copy of list to each party in attendance.

C. The roofing system manufacturer reserves the right to request a thermographic scan of the roof during final inspection to determine if any damp or wet materials have been installed. The thermographic scan shall be provided by the Roofing Contractor.

D. If core cuts verify the presence of damp or wet materials, the Roofing Contractor shall be required to replace the damaged areas at his own expense.

E. Repair or replace deteriorated or defective work found at time above inspection as required to a produce an installation which is free of damage and deterioration at time of Substantial Completion and according to warranty requirements.

F. Notify the Owner upon completion of corrections.

G. Following the final inspection, provide written notice of acceptance of the installation from the roofing system manufacturer.

H. Immediately correct roof leakage during construction. If the Contractor does not respond within twenty-four (24) hours, the Owner will exercise rights to correct the Work under the terms of the Conditions of the Contract.

END OF SECTION 075500

SECTION 087100
DOOR HARDWARE

Revised, Addendum #2, 09/01/2017

PART 1 – GENERAL

1.1 WORK INCLUDED

A. Door hardware.

B. Thresholds, weather seals and smoke seals.

C. Electrified door hardware.

D. Scope of Work in this Section: Provide door hardware necessary to complete work. Hardware items not specifically specified or identified are to be provided of type and quality suitable to the service required and comparable to other hardware, and at no additional cost to Owner.

1.2 WORK FURNISHED BUT INSTALLED UNDER OTHER SECTIONS

A. Provide templates to:
   1. Section 08 11 13 for door and frame preparation.
   2. Section 08 14 00 for door preparation.
   3. Section 08 44 13 for door and frame preparation.
   4. Section 32 31 13 for gate and frame preparation.
   5. Section 32 31 19 for gate and frame preparation.

1.3 RELATED WORK

A. Division 3-Concrete – Core Drilling for Stop Anchors

B. Section 08 11 13-Hollow Metal Doors and Frames.

C. Section 08 14 00-Wood Doors.

D. Section 08 41 13-Aluminum Entrances and Storefronts.

E. Section 09 90 00-Painting

F. Division 26-Electrical

G. Section 28 13 00-Access Control.

H. Section 32 31 13-Chain Link Fences and Gates.

I. Section 32 31 19-Decorative Metal Fences and Gates.

1.4 REFERENCES

A. Steel Door Institute (SDI) standards as specified.

B. Architectural Woodwork Institute (AWI) as specified.

C. California Building Code (CBC) 2010.

D. California Referenced Standards Code (CRSC).

E. Americans with Disabilities Act (ADA) of 1990 criteria as specified.

F. Underwriters Laboratories Inc. standards as specified.

G. National Fire Protection (NFPA) standards as specified.

1.5 QUALITY ASSURANCE

A. Hardware Supplier: Provide hardware from company specializing in supplying institutional door hardware with five years' experience and approved by specified hardware manufacturers as a factory direct supplier.

B. Hardware Supplier Personnel: Employ an Architectural Hardware Consultant (AHC) or equivalent to prepare submittal required by this section. ***ADD-2***

~~B.~~ C. Installer Qualifications: An Approved employer of workers trained and certified by manufacture of each individual product. ***ADD-2***

1.6 REGULATORY REQUIREMENTS

A. Conform to CBC "Means of Egress" requirements.

B. Conform to UL10C requirements applicable to positive pressure fire rated doors and frames. Provide all necessary hardware for complete fire labeled opening including ball-bearing hinges, latching hardware, non-flaming fluid closers, smoke seals and intumescent hot seals.

C. Conform to CRSC Standard 12-7-4 requirements applicable to fire rated doors and frames.

D. Conform to applicable requirements of the Americans with Disabilities Act of 1990 regarding accessibility requirements for door and entrance hardware.

E. Conform to applicable requirements of California Building Code regarding exiting and accessibility requirements for door and entrance hardware.

F. All hardware shall meet the requirements of CBC Sections 11B-404.2.4.4, 11B-404.2.9, 11B-404.2.8.1, 11B-404.2.7 and 11B-309.4.

1.7 SUBMITTALS

A. Submit schedule and product data under provisions of Section 01 30 00.

B. Provide five (5) copies of vertical format hardware schedule showing each application including door index, headings, hardware sets, door number and location, door and frame size and material, door and hardware handing, degrees of opening, quantity required, part numbers and finish of each item.

1. Projects with multiple buildings and/or multiple floor levels must be submitted so each building and/or floor level is not mixed with another starting with Building A, 1st floor etc.
2. Architect's review of such schedule does not relieve the Contractor of providing hardware required for the work, whether or not such hardware was inadvertently omitted from this Section.

C. Accompanying the schedules, provide two (2) manufacturer's brochures of each item scheduled, indicating function, finish, dimensions, and related features. No hardware schedule will be accepted for review without submission of such brochure package.

D. Submit manufacturer's certificate of warranty with submittal; otherwise material will be rejected.

E. When alternate manufacturers are proposed by contractor, provide two (2) brochures of proposed items two weeks prior of bid date.

F. Submit only manufacturers specified as approved or alternate.

G. Provide samples indicating hardware design and finish when required by Architect.

1.8 COORDINATION

A. Coordinate work of this Section with other directly affected Sections involving manufacturers of any internal reinforcement for door hardware.

B. In particular, coordinate door preparation in accordance with applicable regulatory and trade standards specified.

C. Review details and conditions prior to ordering hardware. When a door hand is changed during construction, coordinate and change hardware as necessary at no cost to the Owner.

D. Pre-installation training: Provide on-site training by hardware factory personnel on the proper installation, wiring, and programming of the locks, panic hardware, and door closers prior to any such hardware's installation. Provide Schlage AD-Series training to COD facility staff, the project's door hardware installers, and the project's security system installers.

1.9 OPERATIONS AND MAINTENANCE DATA

A. Submit operation and maintenance data under provisions of Division 1.

B. Include data on operating hardware. Lubrication requirements and inspection procedures related to preventive maintenance.

1.10 DELIVERY, STORAGE, AND HANDLING

A. Deliver products to site under provisions of Division 1.

B. Store and protect products under provisions of Division 1.

C. Package hardware items individually; label and identify packages with door opening code to match hardware schedule.

1.11 MAINTENANCE MATERIALS

A. Provide special wrenches and tools applicable to each different or special hardware component.

B. Provide maintenance tools and accessories supplied by hardware component manufacturer.

1.12 WARRANTY

A. Provide unconditional 2-year installation warranty commencing on substantial completion, in addition to manufacturer warranty. ***ADD-2***

B. Site review with designated District representative prior to expiration of warranty as a condition to end installation warranty period. ***ADD-2***

C. Part of manufacturer's regular terms of sale. Provide manufactures regular terms of sale. Provide manufactures written warranties. ***ADD-2***

1. Locksets: Three (3) years. ***ADD-2***

2. Exit Devices: Three (3) years mechanical, one (1) year electrical ***ADD-2***

3. Closers: Thirty (30) years mechanical , two (2) years electrical ***ADD-2***

4. Hinges: One (1) year ***ADD-2***

5. Other Hardware: Two (2) years ***ADD-2***

A. Provide two year guarantee against defects on hardware, including electrical components, five years warranty for cylindrical locks, mortise locks and exit devices and ten year warranty for surface, floor concealed closers and continuous hinges. ***ADD-2***

B. Submit guarantee on form provided in Documents.***ADD-2***

C. Submit manufacturer's certificate of warranty with submittal, otherwise material will be rejected.***ADD-2***

PART 2 -PRODUCTS

DOOR HARDWARE CRITERIA

2.1 MANUFACTURERS

Item	Manufacturer	Approved Alternates
Hinges:	(IVE)-Ives	Stanley, Bommer, Hager, McKinney
Continuous Hinges:	(MAR)-Markar	McKinney, Pemko, Select, Stanley, ABH Manufacturing
Pivots:	(RIX)-Rixson	Ives, McKinney
Push/Pull Plates:	(IVE)-Ives	Trimco, Rockwood
Anti-Vandal Pulls:	(IVE)-Ives	Rockwood, Trimco
Offset Pulls:	(IVE)-Ives	Rockwood, Trimco
Metal Door Flush Bolts:	(IVE)-Ives	Door Controls International, Rockwood
Wood Door Flush Bolts:	(DCI)-Door Controls	Rockwood
Locks and Latchsets:	(SCH)-Schlage	Best (45H), Corbin-Russwin (ML2000), Sargent (8200), Yale (8800)
Cylinders:	(MED)-Medico	CAMPUS STANDARD
Strike Monitors:	(SDC)-Secure Door Controls	Securitron,
Lock Guards:	(D-J)-Don-Jo	Ives, Rockwood
Exit Devices:	(VON)-Von Duprin	Precision Hardware (Apex), Sargent (19-43-80)
Coordinators:	(DCI) - Door Controls	Rockwood
Surface Closers:	(LCN)-LCN	Norton (7500), Sargent (351), Stanley (D4550/D4551)
Overhead (OH) Concealed Closers:	(RIX) - Rixson	Dorma
Floor Stops:	(IVE)-Ives	Rockwood, Trimco
Floor Holder/Stops:	(ROC)-Rockwood	Trimco, Ives
Overhead Stops:	(RIX)-Rixson	Glynn-Johnson, ABH
Kick & Mop Plates:	(TRM)-Trimco	Rockwood, Tice
Adhesive Seals with 3M Tape:	(ZER)-Zero	Or Equal
Door Sweeps	(ZER)-Zero	Pemko, National Guard Products
Automatic Door Bottoms:	(ZER)-Zero	No Known Equal
Rated Overlapping Astragals	(PEM)-Pemko	Reese, or Equal
Thresholds:	(PEM)-Pemko	Zero, National Guard Products
Coat Hooks:	(ROC)-Rockwood	or Equal
Silencers:	(TRM)-Trimco	Ives, Rockwood
Alarm Contacts:	(INT)-Interlogix	or Equal
Knox Boxes:	(KNX) - Knox	No Known Equal
Elec. Power Transfer for TGP	(SEC)-Securitron	or Equal

2.2 HINGES & PIVOTS

A. Unless noted otherwise, provide steel hinges, with finish as shown in schedule. Provide non-ferrous hinges at exterior doors.

B. Where pivots are specified in the hardware sets for hollow metal doors, omit the pivots and provide Markar (or approved equal) continuous hinge: FM-300-MB x CHS-1. At doors with electrified pivots, provide Markar (or approved equal) electric power transfer CE8D-ETAP option.

C. Provide hinges in accordance with following schedule:
   1. Doors up to 4 feet high: 2 hinges.
   2. Doors 4 feet to 7 feet 5 inches high: 3 hinges minimum.
   3. Doors greater than 7 feet 5 inches high: 4 hinges.
   4. Doors up to 3 feet wide, standard weight: 4-1/2" x 4-1/2" hinges.
   5. Doors 3'6" wide to under 4'0" wide, standard weight: 5" x 4-1/2".
   6. Doors 4'0" wide, heavy weight: 5" x 4-1/2".
   7. Provide heavy-weight hinges where specified.
   8. At doors weighing 150 lbs. or more, furnish 5" high hinges.
   9. At doors in aluminum frames: standard weight 4-1/2" x 4-1/2" hinges, or continuous hinges as scheduled.

D. Unless otherwise noted or required, provide full mortise three-knuckle hinges, with non-rising loose pins and concealed ball bearings.

E. Provide set screw (NRP) type at key lockable outswing doors to prevent pin removal when door is in closed position.

F. Where necessary to maintain door clearance at jamb trim, frame conditions, door reveals and similar conditions, provide wide throw hinges as approved by the Architect.

G. Continuous Hinges
   1. To be barrel-type of 14 gauge 304 stainless steel, 14 gauge 1012 cold-rolled steel or 6063-T5 aluminum material with 0.25" diameter stainless steel Teflon-coated pin. Gear types are prohibited. Provide with "medical bearings" to reduce noise and accumulation of dust.
   2. Hinge guard models to be furnished with Adjusta-screw fasteners.
   3. Provide with self-lubricating fiber-reinforced polymer bearings ("MB" option) for noise-free operation and resistance to dust and dirt accumulation.

H. Provide with welded end pins.

I. Where necessary to maintain door clearance at jamb trim, frame conditions, door reveals and similar conditions, provide wide throw hinges as approved by the Architect. Provide wide throw hinges as required for doors swinging 180° into a room to avoid conflict between the door closer cover and the wall or frame.

J. Provide with factory cut-outs for mortise hardware that must penetrate the hinge (e.g. concealed auto door bottoms, concealed power transfer, etc.) where they occur.

K. Provide mortar guard frame box by hinge manufacturer for electric hinges where not provided by frame manufacturer.

2.3 KEYING

A. Keying to be tied into the campus MEDECO M3 grand mastered keyway system. Contractor to coordinate with campus Locksmith to determine keying requirements and keyway.

B. Manufacturer will provide Master keyed cores to be installed by ~~district~~ contractor after installing of hardware is complete and just prior to Owner occupancy.***ADD-2***

C. Contractor to coordinate the order from the manufacture with a Letter of Authorization from the District and have the supplier send sub assembled, bitted cores with specified keyway and uncut keys along with cut key directly to the authorized campus personnel. Installation is to be coordinated with the Contractor and District Project Manager.

~~D. Each master keyed core comes with two keys and two additional keys per core for a total of four cut keys.~~***ADD-2***

D. Provide two standard key per core.***ADD-2***

E. Construction Keying: Contractor to provide temporary keyed alike cores

F. Provide cylinder collars and spacers to match key cylinder finish for each locking device. Provide collar and spacers to ensure a tight, secure fit of the key cylinder to the locking device with no gaps or spaces.

2.4 LOCKSETS, LATCHSET AND STRIKES

A. Unless noted otherwise in schedule, locksets, latchsets, cylinders and component parts shall be the products of single manufacturer.

B. Provide strikes at locks with curved lip strike of sufficient length to protect trim and jamb. Each strike will include wrought strike box (similar to Tice Industries No. 1502). At outswing doors with overlapping astragals installed on the pull side, provide a flat strike with 7/8" lip-to-center dimension.

C. Mortise Locks: Schlage L9000 Series, 06A Lever design ***ADD-2***

D. Lock Body shall include quick reversibility mechanism without removing lock body cover.

E. Provide cast or forged levers only. Roses, where specified, shall be wrought. Escutcheons, where specified, shall be cast or forged.

F. Unless noted otherwise, provide 2-3/4 inch backset.

G. Lock Throw: Comply with UL requirements for throw of bolts and latch bolts on rated fire openings.

H. Auto Flush Bolts: Minimum ½" throw latch bolts, fully automatic extending into top strike and dust proof strike at sill. Provide longer rods as necessary for doors exceeding 7'0" in height. Where auto flush bolts are specified as top bolts only with bottom fire bolt at wood pairs rated above 20-minutes, provide bottom auto flush bolt and dust proof strike (DCI 82 or approved equal) in lieu of specified bottom fire bolt. Provide type of auto flush bolt required by door material (metal or wood), regardless of type specified.

2.5 PANIC EXIT DEVICES

A. Where specified, provide panic exit device with required UL labels. Where panic device is required on fire rated doors, provide UL label with supplementary marking on door and hardware indicating compliant fire exit hardware.

B. Provide modern push-pad type, reversible exit devices. Provide exit device manufacturer's shims as required to clear glass lite frames.

C. Push-pad shall be mounted at a height of not less than 30 inches (762mm) nor more than 44 inches (1118mm) above floor. The unlatching force shall not exceed 15 pounds (66.72N) when applied in the direction of travel per CBC 11B-404.2.9.

D. Exit Devices shall comply with CRSC Standard 12-10-3 and CBC 1008.1.9.

E. Provide exit devices levers of design to match lock levers with breakaway type, forged brass or bronze escutcheon ***ADD-2***

F. Non-Fire Rated Devices: Cylinder Dogging ***ADD-2***

G. Electrically Operated Devices: Single manufacturer source. ***ADD-2***

H. Removable Mullion: Removable Mullion with single turn of building key. ***ADD-2***

2.6 DOOR CLOSERS

A. Surface mounted closers to be full rack and pinion type with cast shell.
   1. Provide drop brackets, mortise shoes, and long arms as required.
   2. Provide non-handed door closers with multi-sized springs, with separate adjustable valves for latch, sweep speed, and backcheck.
   3. Template and adjust closers per manufacturer's recommendations and to meet accessibility requirements. When used in conjunction with an overhead stop, provide special templates and brackets as required.
   4. Where regular arm closers are specified at doors that must swing past 120°, revise closer to LCN 4040T-Series (top jamb) x 4040TJ-18 plate and provide minimum 4-1/2" wide hinges.
   5. Where used in conjunction with an overhead stop, provide special template, special arms, back plates, and other items as needed to allow the closer to be installed without conflicting with the overhead stop.
   ~~5.~~6. Extra-duty arm (EDA) at exterior doors schedule with parallel arm units. ***ADD-2***

2.7 MAGNETIC HOLDERS

A. Provide magnetic holders with tri-volts coils only.

B. Provide assemblies consisting of an armature contact plate with adjustable mounting pivot.

C. Use extensions as necessary to align door at parallel with wall.

2.8 PROTECTIVE PLATES AND EDGE GUARDS

A. Provide stainless steel kick or armor plates as scheduled, 18 gauge, 10 inches high, 2 inches less than door width on single doors, 1 inch less than door width on pair, 40 inches high on armor plates, with all edges beveled. Where armor plates are specified at rated doors, provide with U.L. listing.

B. Provide stainless steel mop plates as scheduled, 18 gauge, 4 inches high, 1 inch less than door width, with all edges beveled.

C. Mortise edge guards:

D. Maximum height to bottom of mortise lock armor front; at doors without mortise locks, provide same height edge guard as doors with mortise locks.
   1. Provide with cut-outs for mortised door hardware.
   2. Provide in mortise configuration.
   3. Provide with bevel to match door bevel.
   4. Provide for exact door thickness.
   5. Provide with countersunk fasteners in edge of door only; door face legs shall have no exposed fasteners.

E. Forward edge guards to wood door manufacturer for factory-installation.

F. Mortise edge guards installed at leading edge of door unless specified otherwise.

2.9 PUSH/PULL PLATES

A. Concealed Fasteners: Provide manufacturer's special concealed fastener system for installation; through-bolted for matched pairs, but not for single units.

2.10 STOPS

A. Provide a floor or wall stop at every door.

B. Provide carpet risers for floor stops where required.

C. Where specified floor or wall stop would present a pedestrian hazard or cannot be used, furnish Rixson model overhead concealed stop.

D. Template overhead stops for maximum available swing.

2.11 SILENCERS

A. Provide silencers at hollow metal or wood door frames that are without seals in quantities as follows:
   1. Single Doors: 3 silencers
   2. Pairs: 4 silencers

2.12 SEALS

A. Provide seals complete with retainers, fasteners and trim.

B. Provide UL listed seals at rated openings.

C. Provide UL listed intumescent hot seal at fire rated wood doors when doors are not being furnish with intumescent hot seal.

D. Unless noted otherwise, furnish fastener-applied silicone or neoprene seals at door jamb and head conditions. Use of vinyl seal prohibited.

E. Where flat bar head seals are specified to accommodate hardware mounted to the underside of the frame stop, furnish factory-cut as required for frame stops narrower than the standard seal width.

F. Where specified, furnish solid neoprene seals complying with MilSpec R6855, Class II, Grade 40.

G. Where concealed automatic door bottoms are specified, provide a type compatible with the construction and rating of the door, regardless of the type specified.

H. At doors in aluminum frames, omit seals. Seals will be provided by aluminum frame section.

I. Where adhesive frame seals are scheduled, provide only type with genuine 3M adhesive tape for superior adhesion.

J. Provide automatic door bottoms with the below features:
   1. Provide integral permanent magnets to assist in even dropping of the door bottom.
   2. Door edge mounting plates that allow the automatic door bottom to be removed for service or replacement without de-mounting the door from the frame.

K. Where frame seals, astragals, or door bottoms are not specified at exterior hollow metal doors, provide weather seals as below:
   1. Outswing door frame seals: Pemko 2891AS x CSK SCREWS.
   2. Inswing door frame seals: Pemko 332CS.
   3. Meeting stile astragals for pairs with panic hardware: Pemko 351C x 351CP.
   4. Overlapping astragals for pairs with locksets and auto flush bolts: Pemko 357SS x CSK TORX SCREWS x SPECIAL HOLE PATTERN TO AVOID CONFLICT WITH LOCK AND AUTO FLUSH BOLTS.
   5. Door bottoms: Pemko 315CN.

2.13 THRESHOLDS

A. General: Except as otherwise indicated furnish standard metal threshold unit of type, size and profile as shown or scheduled. Where required by fire code, furnish appropriate model thresholds at openings where combustible floor material extends through the door opening. Provide threshold as indicated in details. Provide ¼-20 stainless steel fasteners with combo anchors.

B. Thresholds must comply with the requirements of ADA and ANSI-117.1 and CBC section 11B-404.2.5.

C. Provide thresholds with aluminum composite filler where so specified for increased strength.

2.14 FINISHES

A. Finishes are identified in Schedule at end of this Section.

B. Where finish not shown, match finish of lockset.

C. Where finish is noted in the hardware schedule as “TBD”, request finish selection from the Architect and provide the selected finish.

D. Provide fasteners matching in finish, base material and color.

E. Provide anti-microbial lifetime coating where specified on lever handles, panic bars, hospital latch pulls, door pulls and push/pull plates.

2.15 FASTENERS

A. Fasteners: Provide hardware manufacture to conform to publish templates, generally prepared for machine screws installation.

B. Install hardware with manufacturer supplied screws for each item.

C. Provide screws for installation, with each hardware item. Provide Phillips flat-head screws except as otherwise indicated. Finish exposed (exposed under any condition) screws to match hardware finish or, if exposed in surfaces of other work, to match finish of such other work as closely as possible, including "prepared for paint" in surfaces to receive painted finish.

D. Provide concealed fasteners for hardware units which are exposed when door is closed, except to extent no standard units of type specified are available with concealed fasteners.

E. Provide ¼-20 stainless steel machine screws and combo anchors for all thresholds.

2.16 COAT HOOKS

A. Omit coat hooks where specified at doors with half or full glass lites.

B. Where coat hooks are specified at accessible rooms, provide two coat hooks per door, installed at normal height and at ADA prescribed height.

2.17 ELECTRICAL DRAWINGS

A. Provide custom point-to-point wiring diagram for each electric hardware application.

B. Provide custom electric hardware elevation riser diagram for each hardware application.

PART 3 - EXECUTION

3.1 INSPECTION

A. Verify that doors and frames are ready to receive work and dimensions are as indicated on shop drawings, instructed by the manufacturer.

B. Beginning of installation means acceptance of existing conditions.

3.2 INSTALLATION

A. A QUALIFIED MECHANIC skilled in the application of institutional grade builder's hardware shall install hardware.

B. Install hardware in accordance with manufacturer's instructions and requirements of SDI, ANSI/NFPA 80, AWI, and BHMA. Select applicable standard based on door function, type and regulatory criteria.

C. Install hardware in accordance with NFPA 80 in fire labeled doors.

D. Where door is designated as receiving new hardware, package and label hardware by type and function, and deliver to Owner.

E. Predrill pilot holes in wood for screws. Drill and tap for surface mounted hardware on metal. Set hinge leaf snug and flat in mortises, turn screws to flat seat [do not drive].

F. Mount surface closers on side of door away from corridor, inside rooms or in stairs. Install regular or parallel rigid arm closers as required.

G. Provide adequate backing in stud partitions for the attachment of all respective finish hardware.

H. Floor mounted door stops are to be installed at maximum of four inches from the face of the wall or partition.

I. Install thresholds in full bed of sealant at front and side edges.

3.3 INSTALL HARDWARE USING TEMPLATES PROVIDED BY HARDWARE ITEM MANUFACTURER

A. Prior to finishing door, fit hardware to door, utilizing fasteners and templates as specified.

B. Remove hardware, carefully label and store. Where door exists and is designated to receive new finish, remove existing hardware.

C. Re-install after door finish is complete

3.4 UNLESS NOTED OTHERWISE OR SHOWN ON DRAWINGS, MOUNT HARDWARE IN ACCORDANCE WITH THE FOLLOWING CRITERIA:

A. Latchset and Lockset handle: 38 inches above finish floor. Verify manufacturer's template with door design.

B. Glass locks: 40 inches above finish floor to center line. Verify manufacturer's template with door design.

C. Auxiliary Locks: 40 inches to center line.

D. Panic Devices: 40 inches above floor; at storefront doors, aligned with center muntin on adjacent window wall. Verify manufacturer's template with door design.

E. Push and Pull Plates: 44 inches to center line.

F. Door Pulls: 40 inches above finish floor to center line.

3.5 ADJUST CLOSER OPERATING EFFORT CONFORM TO CALIFORNIA BUILDING CODE SECTION 1133B.2.5

A. Exterior and Interior Doors: 5.0 pounds force.

B. Fire Rated Doors: Verify with AHJ (Authority Having Jurisdiction) not to exceed 15.0 pounds force.

3.6 ADJUST CLOSER DELAY AND OPERATING SPEEDS TO COMPLY WITH REQUIREMENTSOF CALIFORNIA BUILDING CODE AND THE AMERICANS WITH DISABILITIES ACT ARCHITECTURAL GUIDELINES, ARTICLE 4.13.10

A. The sweep period of the door closers shall be adjusted so that from an open position of 70 degrees, the door will take at least 3 seconds to move to a point 3 inches from the latch, measured to the leading edge of the door.

B. Closer Certification: Provide written certification, signed by door closer representative, stating closers were inspected and installed in accordance with specified opening force and delay requirements.

3.7 CLEAN AND ADJUST

A. At completion, all hardware shall be left clean and free from disfigurement. Contractor shall make a final adjustment to all door closers and other items of hardware. Where hardware is found defective, repair, replace, or otherwise correct as directed.

B. Adjust and check each operating item of hardware and each door, to ensure proper operation or function of every unit. Adjust hardware so that moving parts operate freely, without bind, or excessive play. Hardware shall be free of paint, corrosion, or damage of any kind.

3.8 POST-INSTALLATION INSPECTION

A. Provide written certification, signed by the hardware manufacturer representative, stating the locks, panics, and door closers were inspected and installed in accordance with specified operational requirements.

DOOR HARDWARE SCHEDULE

HW-1

Men's, Women's

Each Door to Have: (HMD x HMF)			NR	
1	Continuous Hinges	FM-300-WEP	630	MAR
1	Utility Lock	L9060L-06A	630	SCH
2	Mortise Cylinder	LFIC-32	626	MED
2	Permanent Core	MEDECO CORE TO MATCH OWNER STD.	626	MED
1	Closer	4041-DEL- TB	SRIx689	LCN
1	Kick Plate	KO064~~10~~12" x 2" LDW B4E-HVY CTSK	630	TRM ***ADD-2***
1	Mop Plate	KM050 4" x 1" LDW B4E-HVY CTSK	630	TRM
1	Floor Stop	RM850	630	ROC
1	Set Adhesive Seal	*488_-S x 3M TAPE x MITRED	TBD	ZER
1	Threshold	STONE BY OTHERS.		

* INSTALL SEALS TIGHT TO FRAME CORNERS. INSTALL WITH EXTRA CARE THAT ALL OF ADHESIVE TAPE IS FULLY ENGAGED.

HW-1A

Conference

Each Door to Have: (WD x HMF)			NR	
4	Hinges	3CB1	630	IVE
1	Passage Latch	L9010S-06A	630	SCH
1	Closer	4041-DEL- TB	SRIx689	LCN
1	Kick Plate	KO064~~10~~12" x 2" LDW B4E-HVY CTSK	630	TRM ***ADD-2***
1	Floor Stop	RM850	630	ROC
1	Set Adhesive Seal	*488_-S x 3M TAPE x MITRED	TBD	ZER

* INSTALL SEALS TIGHT TO FRAME CORNERS. INSTALL WITH EXTRA CARE THAT ALL OF ADHESIVE TAPE IS FULLY ENGAGED.

HW-1B

Conference

Each Door to Have: (AL/GL x ALF)			NR	
1	Continuous Hinge	SL24HD	***	SEL
2	Door Pulls	1161.SOLID FULL HEIIGHT 5" BACKSET MOUNTING TYPE "N"	630	TRM
1	OHC Closer	PH91-H	689	RIX
1	Floor Stop	RM850	630	ROC

FRAME SEALS BY ALUM FRAME MANUFACTURER

HW-2

Restroom
Each Door to Have: (HMD x HMF)

			Rated		
1	Continuous Hinge	FM-300-WEP		630	MAR
1	Keyed Privacy Lock	L9486L-06A xL583-375 x L583-363		630	SCH
1	Mortise Cylinder	LFIC-32		626	MED
1	Permanent Core	MEDECO CORE TO MATCH OWNER STD.		626	MED
1	Closer	4041-DEL- TB	SRIx	689	LCN
1	Kick Plate	KO064~~10~~12" x 2" LDW B4E-HVY CTSK		630	TRM ***ADD-2***
1	Mop Plate	KM050 4" x 1" LDW B4E-HVY CTSK		630	TRM
1	Wall Stop	RM860		630	ROC
2	Coat Hooks	796 @ 48" and 60" MOUNTING HEIGHT		630	ROC
1	Set Adhesive Seal	*488_-S x 3M TAPE x MITRED		TBD	ZER
1	Threshold	STONE BY OTHERS.			

* INSTALL SEALS TIGHT TO FRAME CORNERS. INSTALL WITH EXTRA CARE THAT ALL OF ADHESIVE TAPE IS FULLY ENGAGED.

HW-3

Interior Office, Division Office
Each Door to Have: (WD x HMF)

			NR	
4	Hinges	3CB1	630	IVE
1	Office Lock	L9456L-06A x L583-363	630	SCH
1	Mortise Cylinder	LFIC-32	626	MED
1	Permanent Core	MEDECO CORE TO MATCH OWNER STD.	626	MED
1	Floor Stop	RM850	630	ROC
1	Set Adhesive Seal	*488_-S x 3M TAPE x MITRED	TBD	ZER
2	Coat Hooks	796 @ 48" and 60" MOUNTING HEIGHT	630	ROC

* INSTALL SEALS TIGHT TO FRAME CORNERS. INSTALL WITH EXTRA CARE THAT ALL OF ADHESIVE TAPE IS FULLY ENGAGED.

HW-3A

Interior Office, Work Room, Lab Prep Room
Each Door to Have: (WD x HMF)

			NR	
4	Hinges	3CB1	630	IVE
1	Office Lock	9456L-06A x L583-363	630	SCH
1	Mortise Cylinder	LFIC-32	626	MED
1	Permanent Core	MEDECO CORE TO MATCH OWNER STD.	626	MED
1	Armor Plate	KA064 34" x 2" LDW B4E-HVY CTSK	630	TRM
1	Overhead Stop & Hold	2-SERIES	630	RIX
1	Set Adhesive Seal	*488_-S x 3M TAPE x MITRED	TBD	ZER

* INSTALL SEALS TIGHT TO FRAME CORNERS. INSTALL WITH EXTRA CARE THAT ALL OF ADHESIVE TAPE IS FULLY ENGAGED.

HW-3B

Interior Office
Each Dbl. Acting Gate: (WD)

			NR	
1	Set of Spring Pivot	7122	626	BOM

HW-3C

Interior Office
Each Door to Have: (WD x HMF)

			NR	
4	Hinges	3CB1	630	IVE
1	Office Lock	L9456L-06A x L583-363	630	SCH
1	Mortise Cylinder	LFIC-32	626	MED
1	Permanent Core	MEDECO CORE TO MATCH OWNER STD.	626	MED
1	Overhead Stop & Hold	2-SERIES	630	RIX
1	Set Adhesive Seal	*488_-S x 3M TAPE x MITRED	TBD	ZER
1	Coat Hook	796	630	ROC

* INSTALL SEALS TIGHT TO FRAME CORNERS. INSTALL WITH EXTRA CARE THAT ALL OF ADHESIVE TAPE IS FULLY ENGAGED.

HW-3D

Prep Room
Each Door to Have: (WD x HMF)

			NR	
4	Hinges	3CB1	630	IVE
1	Classroom Lock	L9070L-06A	630	SCH
1	Mortise Cylinder	LFIC-32	626	MED
1	Permanent Core	MEDECO CORE TO MATCH OWNER STD.	626	MED
1	Armor Plate	KA064 34" x 2" LDW B4E-HVY CTSK	630	TRM
1	Overhead Stop & Hold	2-SERIES	630	RIX
1	Set Seal	332CR HEAD & JAMBS	AL	PEM

HW-5

Janitor Storage, Room, Electrical
Each Door to Have: (WD x HMF)

			NR	
4	Hinges	3CB1 x NRP	630	IVE
1	Utility Lock	L9060L-06A	630	SCH
2	Mortise Cylinder	LFIC-32	626	MED
2	Permanent Core	MEDECO CORE TO MATCH OWNER STD.	626	MED
1	Closer	4040XP-H-EDA-MC TB	SRIx689	LCN
1	Kick Plate	KO064~~10~~12" x 2" LDW B4E-HVY CTSK	630	TRM ***ADD- 2***
1	Overhead Stop & Hold	2-SERIES	630	RIX
1	Set Adhesive Seal	*488_-S x 3M TAPE x MITRED	TBD	ZER

* INSTALL SEALS TIGHT TO FRAME CORNERS. INSTALL WITH EXTRA CARE THAT ALL OF ADHESIVE TAPE IS FULLY ENGAGED.

HW-5A

Waste,
Each Door to Have: (WD x HMF) NR

4	Hinges	3CB1 x NRP	630	IVE
1	Storeroom Lock	L9080L-06A	630	SCH
1	Mortise Cylinder	LFIC-32	626	MED
1	Permanent Core	MEDECO CORE TO MATCH OWNER STD.	626	MED
1	Closer	4040XP-REG- MC TB	SRIx689	LCN
1	Floor Stop	RM850	630	ROC
1	Set Adhesive Seal	*488_-S x 3M TAPE x MITRED	TBD	ZER

* INSTALL SEALS TIGHT TO FRAME CORNERS. INSTALL WITH EXTRA CARE THAT ALL OF ADHESIVE TAPE IS FULLY ENGAGED.

HW-5B

Chemical Storage
Each Door to Have: (WD x HMF) Rated

4	Hinges	3CB1HW x NRP	630	IVE
1	Storeroom Lock	L9080L-06A	630	SCH
1	Mortise Cylinder	LFIC-32	626	MED
1	Permanent Core	MEDECO CORE TO MATCH OWNER STD.	626	MED
1	Closer	4040XP-REG- MC TB	689	LCN
1	Kick Plate	KO064~~10~~12" x 2" LDW B4E-HVY CTSK	630	TRM ***ADD- 2***
1	Floor Stop	RM850	630	ROC
1	Set Seal	332CR HEAD & JAMBS	AL	PEM

* INSTALL SEALS TIGHT TO FRAME CORNERS. INSTALL WITH EXTRA CARE THAT ALL OF ADHESIVE TAPE IS FULLY ENGAGED.

HW-5C

Storage
Each Door to Have: (WD x HMF, HMD x HMF) NR

4	Hinges	3CB1	630	IVE
1	Storeroom Lock	L9080L-06A	630	SCH
1	Mortise Cylinder	LFIC-32	626	MED
1	Permanent Core	MEDECO CORE TO MATCH OWNER STD.	626	MED
1	Kick Plate	KO064~~10~~12" x 2" LDW B4E-HVY CTSK	630	TRM ***ADD- 2***
1	Floor Stop	RM850	630	ROC
1	Set Adhesive Seal	*488_-S x 3M TAPE x MITRED	TBD	ZER

* INSTALL SEALS TIGHT TO FRAME CORNERS. INSTALL WITH EXTRA CARE THAT ALL OF ADHESIVE TAPE IS FULLY ENGAGED.

HW-5D

BDF
Each Door to Have: (HMD x HMF) NR

4	Hinges	3CB1HW x NRP	630	IVE
1	Storeroom Lock	L9080L-06A	630	SCH
1	Mortise Cylinder	LFIC-32	626	MED
1	Permanent Core	MEDECO CORE TO MATCH OWNER STD.	626	MED
1	Closer	4040XP -SCUSH-MC TB SRI	x689	LCN
1	Kick Plate	KO064~~10~~12" x 2" LDW B4E-HVY CTSK	630	TRM ***ADD- 2***
1	Set Adhesive Seal	*488_-S x 3M TAPE x MITRED	TBD	ZER

* INSTALL SEALS TIGHT TO FRAME CORNERS. INSTALL WITH EXTRA CARE THAT ALL OF ADHESIVE TAPE IS FULLY ENGAGED.

HW-5E

Centralized Prep & Storage
Each Dutch Door to Have: (WD x HMF) NR

Top Leaf:

2	Hinges	3CB1 x NRP	630	IVE
1	Dutch Door Bolt	3920-4	626	TRM
1	Overhead Stop & Hold	2-SERIES	630	RIX
1	Set Seal	332CR HEAD & JAMBS	AL	PEM

Bottom Leaf:

2	Hinges	3CB1 x NRP	630	IVE
1	Utility Lock	L9060L-06A	630	SCH
2	Mortise Cylinders	LFIC-32	626	MED
2	Permanent Cores	MEDECO CORE TO MATCH OWNER STD.	626	MED
1	Armor Plate	KA064 34" x 2" LDW B4E-HVY CTSK	630	TRM
1	Floor Stop	RM850	630	ROC
1	Set Seal	332CR HEAD & JAMBS	AL	PEM

* INSTALL SEALS TIGHT TO FRAME CORNERS. INSTALL WITH EXTRA CARE THAT ALL OF ADHESIVE TAPE IS FULLY ENGAGED.

HW-7

Stair Exit
Each [MHO] Door to Have: (WD x HMF) 45 Min.

1	Continuous Hinges	FM-300- WEP	630	MAR
1	Fire Panic Device	AX-98L-BE-F-PA x 996L-06.	630	VON
1	Closer	4040XP-MC PULL SIDE - TB	SRIx689	LCN
1	Kick Plate	KO064 ~~10~~12" x 2" LDW B4E-HVY CTSK	630	TRM ***ADD- 2***
1	Magnetic Holder	998-TRI VOLTAGE x EXT. AS REQUIRED	689	RIX
1	Set Adhesive Seal	*488_-S x 3M TAPE x MITRED	TBD	ZER
1	Threshold	AS PER DETAIL		

* INSTALL SEALS TIGHT TO FRAME CORNERS. INSTALL WITH EXTRA CARE THAT ALL OF ADHESIVE TAPE IS FULLY ENGAGED.
FOR SMOKE DETECTORS, CONDUIT AND WIRING, SEE DIVISION 28

HW-7A

Main Electrical Room
Each Door to Have: (WD x HMF) 45 Min.

1	Continuous Hinges	FM-300-HT-RADBP	630	MAR
1	Fire Panic Device	AX-98LNL-F-PA x 996L-06	630	VON
1	Rim Cylinder	LFIC-32	626	MED
1	Permanent Core	MEDECO CORE TO MATCH OWNER STD.	626	MED
1	Closer	4040XP-SCUSH-MC TB	SRIx689	LCN
1	Kick Plate	KO064 ~~10~~12" x 2" LDW B4E-HVY CTSK	630	TRM ***ADD- 2***
1	Set Adhesive Seal	*488_-S x 3M TAPE x MITRED	TBD	ZER

* INSTALL SEALS TIGHT TO FRAME CORNERS. INSTALL WITH EXTRA CARE THAT ALL OF ADHESIVE TAPE IS FULLY ENGAGED.

HW-12

Electrical Closet
Each Pair to Have: (HMD x HMF) NR

8	Hinges	3CB1 x NRP	630	IVE
2	Manual Flush Bolt	FB358	626	IVE
1	Dust Proof Strike	DP2	626	IVE
1	Storeroom Lock	L9080L-06A 7/8" LTC STRIKE	630	SCH
1	Mortise Cylinder	LFIC-32	626	MED
1	Permanent Core	MEDECO CORE TO MATCH OWNER STD.	626	MED
1	Set Seals	*488_-S x 3M x MITRED	TBD	ZER
1	Astragal	357SP x CSK x TB SPECIAL HOLE PATTERN TO AVOID LOCK CASE	600	PEM
2	Overhead Stop & Hold	2-SERIES	630	RIX

* INSTALL SEALS TIGHT TO FRAME CORNERS. INSTALL WITH EXTRA CARE THAT ALL OF ADHESIVE TAPE IS FULLY ENGAGED.

HW-12A

Cadaver Room
Each Door to Have: (HMD x HMF) NR

1	Cont. Hinge Guard	HG-305- WEP-AS-RADBP	630	MAR
1	Utility Lock	L9060L-06A	630	SCH
1	Mortise Cylinder	LFIC-32	626	MED
1	Permanent Core	MEDECO CORE TO MATCH OWNER STD.	626	MED
1	Edge Guard	EG-308-AS CUT: HARDWARE	630	MAR
1	Closer	4040XP-EDA-H MC TB	689	LCN
1	Armor Plate	KA064 34" x WIDTH TO SNUG TO EDGE GUARD B4E-HVY CTSK	630	TRM
1	Set Seals	*488_-S x 3M x MITRED	TBD	ZER
1	Automatic Door Bottom	350XA-Z49-PULL	TBD	ZER
1	Floor Stop	RM850~~@ ACTIVE LEAF~~	630	ROC ***ADD- 2***

* INSTALL SEALS TIGHT TO FRAME CORNERS. INSTALL WITH EXTRA CARE THAT ALL OF ADHESIVE TAPE IS FULLY ENGAGED.
COORDINATE FIELD PAINTING OF Z49 END PLATES BY DIV. 9

HW-13

Generator
Each Barn Door to Have: (STL x STL) NR

1	Box Track	NO. 25 –LENGTH AS REQUIRED	PWD	C-I
2	Hangers	25-TBS	ZIN	C-I
1	Welding Kit	25-x 374	600	C-I
20	Side Wall Brackets	25G x 1 GALV.	GAL	C-I
2	End Blinds	25G x 2 GALV	GAL	C-I
1	Bottom Derlin Guide	CRC-P375 x DOOR WIDTH		C-I
1	Floor Guide Track	CRC-75 –LENGTH AS REQUIRED		C-I
1	Bow Handle	191	GAL	C-I
1	Flush Pull	470P1	600	C-1
1	Bumper Shoe and Stop	102-P136	600	C-I
1	H D Hasp	182-00030ZC	ZIN	C-I
1	Padlock	TYPE AS REQUIRED	630	MED
1	Permanent Core	MEDECO CORE TO MATCH OWNER STD.	626	MED

HW-18

Welding

Each Gate to Have: (TS x TS)			NR	
2	Weldable Gate Hinges	i-8513 x Blank for Welding	600	BRO
1	Dbl. Cyl. Storeroom Lock	L9082L-06A	630	SCH
2	Mortise Cylinder	LFIC-32	626	MED
2	Permanent Core	MEDECO CORE TO MATCH OWNER STD.	626	MED
1	S.S Closer	STA 8916 ARP x FMC x SNB1 x Back plate as required	630	DOR
1	Gate Mounting Box	K-BXMOR1-DBL CYLINDER	600	KEE
1	Weldable Strike Box	K-BXSTR	600	KEE
1	Wiring Diagram	CUSTOM POINT-TO-POINT	---	XXX
1	Riser Diagram	CUSTOM ELECTRIC HARDWARE ELEVATION	---	XXX

BALANCE OF HARDWARE BY GATE FABRICATOR. GATE FABRICATOR SHALL PROVIDE THE CONDUIT AND WIRING BY DIVISION 26.

HW-19

NOT USED

HW-20

Exit Gate

Each Door to Have: (TS x TS)			NR.	
2	Weldable Gate Hinge	i-8513 x BLANK FOR WELDING	600	BRO
1	Panic Device	CD98XP-NL-OP-PA-AX	630	VON
1	Mortise Cylinder	LFIC-32 (FOR DOGGING)	626	MED
1	Rim Cylinder	LFIC-32 (FOR DEVICE)	626	MED
2	Permanent Core	MEDECO CORE TO MATCH OWNER STD.	626	MED
1	Anti Vandal Pull	1097HA-FC	630	TRM
1	S. S Closer	STA 8916 ARP x FMC x SNB1	630	DOR
1	Aluminum Back Plate	CUSTOM FOR PARALLEL ARM CLOSER FOR NARROW TOP RAIL x SS FASTENER	600	TICE
1	Closer Arm Angle Bracket	CUSTOM ALUMINUM (SIMILAR TO DORMA FTHD BRACKET) x SS SCREWS TO FIT 1" TALL FRAME HEAD	600	TICE
1	Gate Mounting Box	CUSTOM FOR PANIC HARDWARE	600	TICE
1	Gate Strike Bracket	CUSTOM TO ALLOW STRIKE TO MOUNT	600	TICE
1	Lockable Cane Bolt	525-P21-CANE BOLT w/LOCKABLE 524SP W/TWO SLEEVES-ZINC-LOCK IN OPEN POSITION		C-I
1	Padlock	TYPE AS REQUIRED	630	MED
1	Permanent Core	MEDECO CORE TO MATCH OWNER STD.	626	MED

BALANCE OF HARDWARE, INCLUDING 10-INCH HIGH BOTTOM RAIL BY GATE FABRICATOR.
SUBMIT DIMENSIONED SKETCH OF CUSTOM HINGE WITH GATE AND FRAME FOR ARCHITECT'S REVIEW AND APPROVAL.
SUBMIT DIMENSIONED GATE ELEVATION WITH DETAILS SHOWING ALL HARDWARE ITEMS.

HW-20A

Ext. from Science Learning Center
Each Door to Have: (AL/GLD x ALF) NR

1	Cont. Hinge	SL24HD	***	SEL
1	Panic Device	98NL-OP-PAx LESS PULL	630	VON
1	Rim Cylinder	LFIC-32	626	MED
1	Permanent Core	MEDECO CORE TO MATCH OWNER STD.	626	MED
1	Door Pull	1161.SOLID FULL HEIGHT 5" BACKSET MOUNTING TYPE "N"	630	TRM
1	OHC Closer	PH91-N	689	RIX
1	Floor Stop	1214CK x 1268CK	626	TRI
1	Threshold	AS PER DETAILS x MS & ES	AL	PEM
1	Door Sweeps	477_	TBD	ZER

FRAME SEAL BY ALUMINUM STOREFRONT SECTION.CONDUIT AND WIRING BY DIVISION 26.

Exit Corridor
Each [CR, REX, DPS, ADO] Pair to Have: (TGP-STL/GL x STL)

			RATED	
6	Weldable Pivot	907662 BY TGP DOOR AND FRAME SECTION		TGP
2	Electric Power Transfers	EPTL BY TGP DOOR AND FRAME SECTION	689	SEC
1	Electric Panic Devices	QEL-RX -LD3547A -EO-F-PA-CON 24 VDC BY TGP DOOR AND FRAME SECTION	630	VON
1	Electric Panic Device	QEL-RX- LD3547NL-OP-F-PA-CON. - 24 VDC BY TGP DOOR AND FRAME SECTION	630	VON
2	Wire Harness	BY TGP DOOR AND FRAME SECTION	----	VON
1	Rim Cylinder	LFIC-32	626	MED
1	Permanent Core	MEDECO CORE TO MATCH OWNER STD.	626	MED
2	Door Pulls	1161.SOLID FULL HEIIGHT 5" BACKSET MOUNTING TYPE "N"	630	TRM
2	Auto. Door Operators	SEE SPECIFICATION SECTION 08 71 13	689	
2	Floor Stops	1214CK x 1268CK	626	TRM
1	Threshold	AS PER DETAILS x MS & ES	AL	PEM
2	Automatic Door Bottoms	420APKL BY TGP DOOR AND FRAME SECTIONAL		PEM
1	Power Supply	PS902-2RS-4RL		VON
2	Alarm Contacts	1076D BY TGP DOOR AND FRAME SECTION	TBD	INT
1	Set Astragal & Seals	BY TGP DOOR AND FRAME SECTION		
1	Wiring Diagram	CUSTOM POINT-TO-POINT	---	XXX
1	Riser Diagram	CUSTOM ELECTRIC HARDWARE ELEVATION	---	XXX

MOUNTING BRACKETS AND REINFORCEMENT PLATES FOR AUTOMATIC DOOR OPERATORS BY TGP DOOR AND FRAME SECTION.
AUTOMATIC DOOR OPERATOR, ACTIVATION SENSOR AND SAFETY SENSORS BY SECTION 08 71 13. CONTINUOUS WIDTH ENCLOSURE HOUSING FOR AUTOMATIC DOOR OPERATOR BY SECTION 08 71 13. NO REACTIVATION SENSORS AT THESE DOORS.
3-INCH DIAMETER CORE DRILL FOR FLOOR STOP ANCHOR BY DIVISION 3; SET ANCHOR FLUSH IN CONCRETE.
CARD READER, LOW VOLTAGE POWER, AND FIRE ALARM CONNECTION BY DIVISION 28.
CONDUIT AND WIRING BY DIVISION 26.

Theory of Operation: **A**

- Alarm contact monitors door open/closed status. Use of card reader, timer control, use of inside push plate switch, or use of inside panic bar (REX) shunts alarm contact for legal opening. Door prop past time allowed by security system triggers alarm.
- Free egress available at all times by use of the inside panic bar.
- Door may be opened from outside by means of card reader, timer unlock, or mechanical key (emergency override).
- During classroom hours, electric panics are normally powered (unlocked).
- In an emergency, the panics may be locked by signal from a central security point.
- Doors normally opened manually with operators acting as manual door closers.
- Push plate switches available for automatic operation. Inside push plate switch is always available. Outside push plate switch is always available during "open" hours; after hours, outside push plate switch is inactive unless card reader is first used.
- 3-position switch used to turn off auto door operators.
-

SH-1A

Exit Corridor
Each [CRDPS, ADO] Pair to Have: (TGP-STL/GL x STL)

			RATED	
6	Weldable Pivot	907662 BY TGP DOOR AND FRAME SECTION		TGP
2	Electric Power Transfers	EPTL BY TGP DOOR AND FRAME SECTION	689	SEC
1	Electric Panic Device	QEL-RX-LD 3547A -F-PA- CON. 24 VDC BY TGP DOOR AND FRAME SECTION	630	VON
1	Electric Panic Device	QEL-RX-LD LD3547A-NL-OP-F-PA-CON. BY TGP DOOR AND FRAME SECTION 24 VDC	630	VON
2	Wire Harness		----	VON
1	Rim Cylinder	LFIC-32	626	MED
1	Permanent Core	MEDECO CORE TO MATCH OWNER STD.	626	MED
2	Door Pulls	1161.SOLID FULL HEIIGHT 5” BACKSET MOUNTING TYPE “N”	630	TRM
2	Auto. Door Operators	SEE SPECIFICATION SECTION 08 71 13	689	
2	Floor Stops	1214CK x 1268CK	626	TRM
1	Threshold	AS PER DETAILS x MS & ES	AL	PEM
2	Automatic Door Bottoms	420APKL BY TGP DOOR AND FRAME SECTIONAL		PEM
1	Power Supply	PS902-2RS-4RL		VON
2	Alarm Contacts	1076D BY TGP DOOR AND FRAME SECTION	TBD	INT
1	Set Astragal & Seals	BY TGP DOOR AND FRAME SECTION		
1	Wiring Diagram	CUSTOM POINT-TO-POINT	---	XXX
1	Riser Diagram	CUSTOM ELECTRIC HARDWARE ELEVATION	---	XXX

AUTOMATIC DOOR OPERATOR, ACTIVATION SENSOR AND SAFETY SENSORS BY SECTION 08 71 13. CONTINUOUS WIDTH ENCLOSURE HOUSING FOR AUTOMATIC DOOR OPERATOR BY SECTION 08 71 13. NO REACTIVATION SENSORS AT THESE DOORS.
3-INCH DIAMETER CORE DRILL FOR FLOOR STOP ANCHOR BY DIVISION 3; SET ANCHOR FLUSH IN CONCRETE.
CARD READER, LOW VOLTAGE POWER, AND FIRE ALARM CONNECTION BY DIVISION 28. CONDUIT AND WIRING BY DIVISION 26.
CONTINUOUS WIDTH ENCLOSURE HOUSING FOR AUTOMATIC DOOR OPERATOR BY SECTION 08 71 13.

Theory of Operation**: A**

- Alarm contact monitors door open/closed status. Use of card reader, timer control, use of inside push plate switch, or use of inside panic bar (REX) shunts alarm contact for legal opening. Door prop past time allowed by security system triggers alarm.
- Free egress available at all times by use of the inside panic bar.
- Door may be opened from outside by means of card reader, timer unlock, or mechanical key (emergency override).
- During classroom hours, electric panics are normally powered (unlocked).
- In an emergency, the panics may be locked by signal from a central security point.
- Doors normally opened manually with operators acting as manual door closers.
- Push plate switches available for automatic operation. Inside push plate switch is always available. Outside push plate switch is always available during “open” hours; after hours, outside push plate switch is inactive unless card reader is first used.
- 3-position switch used to turn off auto door operators.

SH-1A.1

Exit Corridor

Each [CR, DPS, ADO] Pair to Have: (AL/GL x AL)			NR	
2	Cont. Hinges	SL24HD –VD-EPT	***	SEL
2	Electric Power Transfers	EPT-10 x CON	689	VON
1	Electric Panic Device	QEL-RX- LD3547EO-PA- CON.	630	VON
1	Electric Panic Device	QEL-RX- LD3547A- NL-OP-PA-CON.	630	VON
2	Wire Harness		----	VON
1	Rim Cylinder	LFIC-32	626	MED
1	Permanent Core	MEDECO CORE TO MATCH OWNER STD.	626	MED
2	Door Pulls	1161.SOLID FULL HEIIGHT 5” BACKSET MOUNTING TYPE “N”	630	TRM
2	Auto. Door Operators	SEE SPECIFICATION SECTION 08 71 13	689	
2	Overhead Stops	1-SERIESWITH LS OPTION	630	RIX
1	Threshold	AS PER DETAILS x MS & ES	AL	PEM
1	Power Supply	PS902-2RS-4RL		VON
2	Door Sweeps	477_	TBD	ZER
2	Alarm Contacts	1076D BYSECURITY	TBD	INT
1	Wiring Diagram	CUSTOM POINT-TO-POINT	---	XXX
1	Riser Diagram	CUSTOM ELECTRIC HARDWARE ELEVATION	---	XXX

FRAME SEAL & MEETING STILE ASTRAGAL BY ALUMINUM STOREFRONT SECTION.
AUTOMATIC DOOR OPERATOR, ACTIVATION SENSOR AND SAFETY SENSORS BY SECTION 08 71 13.
CARD READER, LOW VOLTAGE POWER BY DIVISION 28.
CONDUIT AND WIRING BY DIVISION 26.
CONTINUOUS WIDTH ENCLOSURE HOUSING FOR AUTOMATIC DOOR OPERATOR BY SECTION 08 71 13.

Theory of Operation: **A**

- Alarm contact monitors door open/closed status. Use of card reader, timer control, use of inside push plate switch, or use of inside panic bar (REX) shunts alarm contact for legal opening. Door prop past time allowed by security system triggers alarm.
- Free egress available at all times by use of the inside panic bar.
- Door may be opened from outside by means of card reader, timer unlock, or mechanical key (emergency override).
- During classroom hours, electric panics are normally powered (unlocked).
- In an emergency, the panics may be locked by signal from a central security point.
- Doors normally opened manually with operators acting as manual door closers.
- Push plate switches available for automatic operation. Inside push plate switch is always available. Outside push plate switch is always available during “open” hours; after hours, outside push plate switch is inactive unless card reader is first used.
- 3-position switch used to turn off auto door operators.

SH-1B

Exit Corridor
Each [CR, EPH, DPS] Pair to Have: (TGP-STL/GL x STL) RATED

6	Weldable Pivot	907662 BY DOOR AND FRAME SECTION		TGP
2	Electric Power Transfers	EPT-10 x CON	689	VON
1	Electric Panic Device	QEL-LD LD3547A-EO-F -PA- CON. 24VDC	630	VON
1	Electric Panic Device	QEL LD LD3547A NL-F-OP-PA-CON.	630	VON
2	Wire Harness		----	VON
1	Rim Cylinder	LFIC-32	626	MED
1	Permanent Core	MEDECO CORE TO MATCH OWNER STD.	626	MED
2	Door Pulls	1161.SOLID FULL HEIIGHT 5" BACKSET MOUNTING TYPE "N"	630	TRM
~~2~~	~~Surface Closer~~	~~TS9315T, PUSH SIDE MTD 110 DEGREE~~	~~689~~	~~DOM~~ ***ADD-2***
2	Closers	4040XP -EDA-MC TB x BACK PLATE SRIx	689	LCN ***ADD-2***
2	Floor Stops	1214CK x 1268CK	626	TRM
1	Threshold	AS PER DETAILS x MS & ES	AL	PEM
2	Automatic Door Bottoms	420APKL BY TGP DOOR AND FRAME SECTION	AL	PEM
1	Power Supply	PS902-2RS		VON
1	Set Astragal & Seals	BY TGP DOOR AND FRAME SECTION		
2	Alarm Contacts	1076D BY TGP DOOR AND FRAME SECTION	TBD	INT
1	Wiring Diagram	CUSTOM POINT-TO-POINT	---	XXX
1	Riser Diagram	CUSTOM ELECTRIC HARDWARE ELEVATION	---	XXX

FRAME SEAL & MEETING STILE ASTRAGAL BY CARD READER, LOW VOLTAGE POWER BY DIVISION 28.
CONDUIT AND WIRING BY DIVISION 26.
CONTINUOUS WIDTH ENCLOSURE HOUSING FOR AUTOMATIC DOOR OPERATOR
3-INCH DIAMETER CORE DRILL FOR FLOOR STOP ANCHOR BY DIVISION 3; SET ANCHOR FLUSH IN CONCRETE.

SH-1C

Exit Corridor

		Each [CR, REX, DPS] Pair to Have: (TGP-STL/GL x STL)	RATED	
2	Cont. Hinges	SL24HD –VD-EPT	***	SEL
2	Electric Power Transfers	EPT-10 x CON	689	VON
1	Electric Panic Devices	QEL-RX -LD9847EO-F-PA-CON.	630	VON
1	Electric Panic Device	QEL-RX-LD9847NL-OP-F-PA-CON.	630	VON
2	Wire Harness		----	VON
1	Rim Cylinder	LFIC-32	626	MED
1	Permanent Core	MEDECO CORE TO MATCH OWNER STD.	626	MED
2	Door Pulls	1161.SOLID FULL HEIIGHT 5" BACKSET MOUNTING TYPE "N"	630	TRM
~~2~~	~~OH Concealed Closers~~	~~91N~~	~~689~~	~~RIX~~ ***ADD-2***
2	Closers	4040XP -EDA-MC TB x BACK PLATE	SRIx689	LCN ***ADD-2***
2	Floor Stops	1214CK x 1268CK	626	TRM
1	Threshold	AS PER DETAILS x MS & ES	AL	PEM
2	Door Sweeps	477_	TBD	ZER
1	Power Supply	PS902-2RS-4RL		VON
2	Alarm Contacts	1076D BY SECURITY	TBD	INT
1	Set Adhesive Seal	*488_-S x 3M TAPE x MITRED	TBD	ZER
1	Set Astragal	351C x 351CS	AL	PEM
1	Wiring Diagram	CUSTOM POINT-TO-POINT	---	XXX
1	Riser Diagram	CUSTOM ELECTRIC HARDWARE ELEVATION	---	XXX
1	Set Meeting Stile Astragal	351C x 351CS	AL	PEM

AUTOMATIC DOOR OPERATOR, ACTIVATION SENSOR AND SAFETY SENSORS BY SECTION 08 71 13. CONTINUOUS WIDTH ENCLOSURE HOUSING FOR AUTOMATIC DOOR OPERATOR BY SECTION 08 71 13. NO REACTIVATION SENSORS AT THESE DOORS.
3-INCH DIAMETER CORE DRILL FOR FLOOR STOP ANCHOR BY DIVISION 3; SET ANCHOR FLUSH IN CONCRETE.
CARD READER, LOW VOLTAGE POWER, AND FIRE ALARM CONNECTION BY DIVISION 28. CONDUIT AND WIRING BY DIVISION 26.

Theory of Operation: **A1**

- Alarm contact monitors door open/closed status. Use of card reader, timer control, use of inside push plate switch, or use of inside panic bar (REX) shunts alarm contact for legal opening. Door prop past time allowed by security system triggers alarm.
- Free egress available at all times by use of the inside panic bar.
- Door may be opened from outside by means of card reader, timer unlock, or mechanical key (emergency override).
- During classroom hours, electric panics are normally powered (unlocked).
- In an emergency, the panics may be locked by signal from a central security point.
- Doors self-closed by manual door closers.

SH-2

Physics Lab,
Each [CR, REX, DPS] Door to Have: (WD x HMF) NR

3	Hinges	3CB1HW x NRP	630	IVE
1	Transfer Hinge	3CB1HW x TW8 x EXTENDED LEADS TO HEAD	630	IVE
1	Wire Harness		----	SCH
1	Electrified Lock	L9092LEU-RX x CON 06A-24VDC	630	SCH
1	Permanent Core	MEDECO CORE TO MATCH OWNER STD.	626	MED
1	Closer	4040XP-P-MC TB	689	LCN
1	"Z" Bracket	870SPB	600	ZER
1	Kick Plate	KO064~~10~~12" x 2" LDW B4E-HVY CTSK	630	TRM ***ADD-2***
1	Floor Stop	RM850	630	ROC
1	Automatic Door Bottom	369A-Z49-PULL	TBD	ZER
1	Set Seal	332CR HEAD & JAMBS	AL	PEM
1	Threshold	151A x MS & ES	AL	PEM
1	Wiring Diagram	CUSTOM POINT-TO-POINT	---	XXX
1	Riser Diagram	CUSTOM ELECTRIC HARDWARE ELEVATION	---	XXX
1	Alarm Contact	1076D	TBD	INT

LOW VOLTAGE POWER AND WIRING BY DIVISION 28.
CONDUIT AND WIRING BY DIVISION 26.
PROVIDE CLOSER THRU-BOLT FINISH TO MATCH DOOR FINISH.
COORDINATE FIELD PAINTING OF Z49 END PLATES BY DIV. 9

SH-2.1

Division Office
Each [CR, REX, DPS] Door to Have: (WD x HMF) NR

3	Hinges	3CB1HW x NRP	630	IVE
1	Transfer Hinge	3CB1HW x TW8 x EXTENDED LEADS TO HEAD	630	IVE
1	Wire Harness		----	SCH
1	Electrified Lock	L9092LEU-RX x CON 06A-24VDC	630	SCH
1	Permanent Core	MEDECO CORE TO MATCH OWNER STD.	626	MED
1	Closer	4040XP REG--MC TB	689	LCN
1	Kick Plate	KO064 ~~10"~~12" x 2" LDW B4E-HVY CTSK	630	TRM ***ADD-2***
1	Floor Stop	RM850	630	ROC
1	Automatic Door Bottom	369A-Z49-PULL	TBD	ZER
1	Set Seal	332CR HEAD & JAMBS	AL	PEM
1	Threshold	151A x MS & ES	AL	PEM
1	Wiring Diagram	CUSTOM POINT-TO-POINT	---	XXX
1	Riser Diagram	CUSTOM ELECTRIC HARDWARE ELEVATION	---	XXX
1	Alarm Contact	1076D	TBD	INT

LOW VOLTAGE POWER AND WIRING BY DIVISION 28.
CONDUIT AND WIRING BY DIVISION 26.
PROVIDE CLOSER THRU-BOLT FINISH TO MATCH DOOR FINISH.
COORDINATE FIELD PAINTING OF Z49 END PLATES BY DIV. 9

SH-2A

IDF, Mechanical Room
Each [CR, REX, DPS] Door to Have: (HMD x HMF) NR

3	Hinges	3CB1HW x NRP	630	IVE
1	Transfer Hinge	3CB1HW x TW8 x EXTENDED LEADS TO HEAD	630	IVE
1	Wire Harness		----	SCH
1	Electrified Lock	L9092LEU-RX x CON 06A-24VDC	630	SCH
1	Permanent Core	MEDECO CORE TO MATCH OWNER STD.	626	MED
1	Closer	4040XP-EDA-MC TB	689	LCN
1	Kick Plate	KO064~~10~~12" x 2" LDW B4E-HVY CTSK	630	TRM ***ADD-2***
1	Floor Stop	RM850	630	ROC
1	Set Seal	332CR HEAD & JAMBS	AL	PEM
1	Threshold	AS PER DETAIL		
1	Wiring Diagram	CUSTOM POINT-TO-POINT	---	XXX
1	Riser Diagram	CUSTOM ELECTRIC HARDWARE ELEVATION	---	XXX
1	Alarm Contact	1076D	TBD	INT

* INSTALL SEALS TIGHT TO FRAME CORNERS. INSTALL WITH EXTRA CARE THAT ALL OF ADHESIVE TAPE IS FULLY ENGAGED.
COORDINATE FIELD PAINTING OF Z49 END PLATES BY DIV. 9
CARD READER, REX-SENSOR, LOW VOLTAGE POWER AND WIRING BY DIVISION 28.
CONDUIT AND WIRING BY DIVISION 26.

Theory of Operation:

- Alarm contact monitors door open/closed status. Use of card reader or use of inside push pad (REX) shunts alarm contact for legal opening. Door prop past time allowed by security system triggers alarm.
- Free egress available at all times by use of the inside push pad.
- Door may be opened from outside by means of card reader or mechanical key (emergency override).

BDF

Each [CR, REX, DPS] Door to Have: (HMD x HMF)			Labeled	
3	Hinges	3CB1HW x NRP	630	IVE
1	Transfer Hinge	3CB1HW x TW8 x EXTENDED LEADS TO HEAD	630	IVE
1	Wire Harness		----	SCH
1	Electrified Lock	L9092LEU-RX x CON 06A-24VDC	630	SCH
1	Permanent Core	MEDECO CORE TO MATCH OWNER STD.	626	MED
1	Closer	4040XP-EDA-MC TB	689	LCN
1	Kick Plate	KO064~~10~~12" x 2" LDW B4E-HVY CTSK	630	TRM ***ADD-2***
1	Overhead Concealed Stop	2 Series	630	RIX
1	Set Seal	332CR HEAD & JAMBS	AL	PEM
1	Threshold	AS PER DETAIL		
1	Wiring Diagram	CUSTOM POINT-TO-POINT	---	XXX
1	Riser Diagram	CUSTOM ELECTRIC HARDWARE ELEVATION	---	XXX
1	Alarm Contact	1076D	TBD	INT

COORDINATE FIELD PAINTING OF Z49 END PLATES BY DIV. 9
CARD READER, REX-SENSOR, LOW VOLTAGE POWER AND WIRING BY DIVISION 28.
CONDUIT AND WIRING BY DIVISION 26.

Theory of Operation:

- Alarm contact monitors door open/closed status. Use of card reader or use of inside push pad (REX) shunts alarm contact for legal opening. Door prop past time allowed by security system triggers alarm.
- Free egress available at all times by use of the inside push pad.
- Door may be opened from outside by means of card reader or mechanical key (emergency override).

SH-2B

Computer Lab, Geology/Physical Science Lab & Lecture
Each [CR, DPS, EB, I/L] Door to Have: (WD x HMF) NR

3	Hinges	3CB1HW x NRP	630	IVE
1	Transfer Hinge	3CB1HW x TW8 x EXTENDED LEADS TO HEAD	630	IVE
1	Wire Harness		----	SCH
1	Electrified Lock	L9092LEU x CON 06A-24VDC	630	SCH
1	Permanent Core	MEDECO CORE TO MATCH OWNER STD.	626	MED
1	Closer	4040XP-EDA-MC TB	689	LCN
1	Kick Plate	KO064~~10~~12" x2" LDW B4E-HVY CTSK	630	TRM ***ADD-2***
1	Floor Stop	RM850	630	ROC
1	Set Seal	332CR HEAD & JAMBS	AL	PEM
1	Wiring Diagram	CUSTOM POINT-TO-POINT	---	XXX
1	Riser Diagram	CUSTOM ELECTRIC HARDWARE ELEVATION	---	XXX
1	Alarm Contact	1076D	TBD	INT

CONDUIT AND WIRING BY DIVISION 26.

Theory of Operation:

- Alarm contact monitors door open/closed status. Use of card reader or use of inside lever (REX) shunts alarm contact for legal opening. Door prop past time allowed by security system triggers alarm.
- Free egress available at all times by use of the inside lever.
- Door may be opened from outside by means of card reader, or mechanical key (emergency override).
- In an emergency, the electric lock may be locked by signal from a EB Button located inside the Classroom.

AT DOOR 212B, 213B, 309A ADD THE FOLLOWING: ***ADD-2***

1	Auto. Door Bottom	369AA x Z49	AL	ZER
1	Threshold	151A x MS & ES	AL	PEM

SH-2B.1

Reception, Open Office, Storage, Offices, Classroom
Each [CR, REX, DPS] Door to Have: (WD x HMF) NR

3	Hinges	3CB1HW x NRP	630	IVE
1	Transfer Hinge	3CB1HW x TW8 x EXTENDED LEADS TO HEAD	630	IVE
1	Wire Harness		----	SCH
1	Electrified Lock	L9092LEU-RX x CON 06A-24VDC	630	SCH
1	Permanent Core	MEDECO CORE TO MATCH OWNER STD.	626	MED
1	Closer (Inswing)	4040XP-REG-MC TB	689	LCN
1	Closer (Outswing)	4040XP-EDA-MC TB	689	LCN
1	Kick Plate	KO064 ~~10~~12" x 1" LDW B4E-HVY CTSK	630	TRM ***ADD-2***
1	Floor Stop	RM850	630	ROC
1	Overhead Concealed Stop	2 Series @ DOOR 116A	630	RIX
1	Set Seal	332CR HEAD & JAMBS	AL	PEM
1	Automatic Door Bottom	369A-Z49-PULL	TBD	ZER
1	Threshold	151A x MS & ES	AL	PEM
1	Wiring Diagram	CUSTOM POINT-TO-POINT	---	XXX
1	Riser Diagram	CUSTOM ELECTRIC HARDWARE ELEVATION	---	XXX
1	Alarm Contact	1076D	TBD	INT

* INSTALL SEALS TIGHT TO FRAME CORNERS. INSTALL WITH EXTRA CARE THAT ALL OF ADHESIVE TAPE IS FULLY ENGAGED.
CARD READER, LOW VOLTAGE POWER AND EMERGENCY BUTTON AND WIRING BY DIVISION 28.
CONDUIT AND WIRING BY DIVISION 26.

Theory of Operation:

- Alarm contact monitors door open/closed status. Use of card reader or use of inside lever (REX) shunts alarm contact for legal opening. Door prop past time allowed by security system triggers alarm.
- Free egress available at all times by use of the inside lever.
- Door may be opened from outside by means of card reader, or mechanical key (emergency override).
- In an emergency, the electric lock may be locked by signal from a EB Button located inside the Classroom.

SH-2B.2

Reception, Open Office, Storage, Offices, Waste
Each [CR, REX, DPS] Door to Have: (WD x HMF) NR

3	Hinges	3CB1HW x NRP	630	IVE
1	Transfer Hinge	3CB1HW x TW8 x EXTENDED LEADS TO HEAD	630	IVE
1	Wire Harness		----	SCH
1	Electrified Lock	L9092LEU-RX x CON 06A-24VDC	630	SCH
1	Permanent Core	MEDECO CORE TO MATCH OWNER STD.	626	MED
1	Closer	4040XP-REG-MC TB	689	LCN
1	Kick Plate	KO064~~10~~12" x 1" LDW B4E-HVY CTSK	630	TRM ***ADD-2***
1	Floor Stop	RM850	630	ROC
1	Set Adhesive Seal	*488_-S x 3M TAPE x MITRED	TBD	ZER
2	Coat Hooks	796 (@ 48" & 60" A.F.F.)	630	ROC
1	Wiring Diagram	CUSTOM POINT-TO-POINT	---	XXX
1	Riser Diagram	CUSTOM ELECTRIC HARDWARE ELEVATION	---	XXX
1	Alarm Contact	1076D	TBD	INT

* INSTALL SEALS TIGHT TO FRAME CORNERS. INSTALL WITH EXTRA CARE THAT ALL OF ADHESIVE TAPE IS FULLY ENGAGED.
CARD READER, LOW VOLTAGE POWER AND EMERGENCY BUTTON AND WIRING BY DIVISION 28.
CONDUIT AND WIRING BY DIVISION 26.

Theory of Operation:

- Alarm contact monitors door open/closed status. Use of card reader or use of inside lever (REX) shunts alarm contact for legal opening. Door prop past time allowed by security system triggers alarm.
- Free egress available at all times by use of the inside lever.
- Door may be opened from outside by means of card reader, or mechanical key (emergency override).
- In an emergency, the panic may be locked by signal from a EB Button located inside the Classroom.

SH-2B.3

Geology/Earth Science Lab
Each [CR, REX, DPS, EB] Door to Have: (WD x HMF) NR

3	Hinges	3CB1HW x NRP	630	IVE
1	Transfer Hinge	3CB1HW x TW8 x EXTENDED LEADS TO HEAD	630	IVE
1	Wire Harness		----	SCH
1	Electrified Lock	L9092LEU-RX x CON 06A-24VDC	630	SCH
1	Permanent Core	MEDECO CORE TO MATCH OWNER STD.	626	MED
1	Closer	4040XP-EDA-MC TB	689	LCN
1	Kick Plate	KO064~~10~~12" x 1" LDW B4E-HVY CTSK	630	TRM ***ADD-2***
1	Floor Stop	RM850	630	ROC
1	Set Seal	332CR HEAD & JAMBS	AL	PEM
1	Auto. Door Bottom	369AA x Z49	AL	ZER
1	Threshold	151A x MS & ES	AL	PEM
1	Wiring Diagram	CUSTOM POINT-TO-POINT	---	XXX
1	Riser Diagram	CUSTOM ELECTRIC HARDWARE ELEVATION	---	XXX
1	Alarm Contact	1076D	TBD	INT

* INSTALL SEALS TIGHT TO FRAME CORNERS. INSTALL WITH EXTRA CARE THAT ALL OF ADHESIVE TAPE IS FULLY ENGAGED.
CARD READER, LOW VOLTAGE POWER AND EMERGENCY
BUTTON AND WIRING BY DIVISION 28.
CONDUIT AND WIRING BY DIVISION 26.

Theory of Operation:

- Alarm contact monitors door open/closed status. Use of card reader or use of inside lever (REX) shunts alarm contact for legal opening. Door prop past time allowed by security system triggers alarm.
- Free egress available at all times by use of the inside lever.
- Door may be opened from outside by means of card reader, or mechanical key (emergency override).
- In an emergency, the panic may be locked by signal from a EB Button located inside the Classroom.

SH-2C

General Biology Lab
Each [CR, I/L, REX, DPS] Door to Have: (WD x HMF) NR.

1	Elec. Cont. Hinge	FM-300-WEP -CTP-	630	MAR
1	Electric Power Transfer	EPT-10 x CON	689	VON
1	Electrified Lock	L9092LEU-RX- 06A x CON-24VDC 7/8" LTC STK	630	SCH
1	Permanent Core	MEDECO CORE TO MATCH OWNER STD.	626	MED
1	Wire Harness		----	VON
1	Closer	4040XP-EDA-MC TB	689	LCN
1	Kick Plates	KO064~~10~~12" x 1" LDW B4E-HVY CTSK	630	TRM ***ADD-2***
1	Floor Stop	RM850	630	ROC
1	Set Adhesive Seal	*488_-S x 3M TAPE x MITRED	TBD	ZER
1	Alarm Contacts	1076D BY SECURITY	TBD	GES
1	Wiring Diagram	CUSTOM POINT-TO-POINT	---	XXX
1	Riser Diagram	CUSTOM ELECTRIC HARDWARE ELEVATION	---	XXX

LOW VOLTAGE POWER AND EMERGENCY BUTTON AND WIRING BY DIVISION 28.
CONDUIT AND WIRING BY DIVISION 26.
I/S ELECTRIC LOCK ACTIVATED BY NEAR BY CARD READER AS INDICATED IN DOOR SCHEDULE
NOTE: * INSTALL SEALS TIGHT TO FRAME CORNERS. INSTALL WITH EXTRA CARE THAT ALL OF ADHESIVE TAPE IS FULLY ENGAGED.

Theory of Operation:

- Alarm contact monitors door open/closed status. Use of card reader or use of inside lever (REX) shunts alarm contact for legal opening. Door prop past time allowed by security system triggers alarm.
- Free egress available at all times by use of the inside lever.
- Door may be opened from outside by means of card reader, or mechanical key (emergency override).
- In an emergency, the panic may be locked by signal from a EB Button located inside the Classroom

SH-2C.1

Instrument

Each [CR, REX, DPS] Door to Have: (WD x HMF)			NR.	
1	Elec. Cont. Hinge	FM-300-WEP -CTP-	630	MAR
1	Electric Power Transfer	EPT-10 x CON	689	VON
1	Electrified Lock	L9092LEU-RX- 06A x CON-24VDC 7/8" LTC STK	630	SCH
1	Permanent Core	MEDECO CORE TO MATCH OWNER STD.	626	MED
1	Wire Harness		----	VON
1	Closer	4040XP-EDA-MC TB	689	LCN
1	Kick Plates	KO064~~10~~12" x 1" LDW B4E-HVY CTSK	630	TRM ***ADD-2***
1	Floor Stop	RM850	630	ROC
1	Set Adhesive Seal	*488_-S x 3M TAPE x MITRED	TBD	ZER
1	Alarm Contacts	1076D BY SECURITY	TBD	GES
1	Wiring Diagram	CUSTOM POINT-TO-POINT	---	XXX
1	Riser Diagram	CUSTOM ELECTRIC HARDWARE ELEVATION	---	XXX

LOW VOLTAGE POWER AND WIRING BY DIVISION 28.
CONDUIT AND WIRING BY DIVISION 26.
NOTE: * INSTALL SEALS TIGHT TO FRAME CORNERS. INSTALL WITH EXTRA CARE THAT ALL OF ADHESIVE TAPE IS FULLY ENGAGED.

Theory of Operation:

- Alarm contact monitors door open/closed status. Use of card reader or use of inside lever (REX) shunts alarm contact for legal opening. Door prop past time allowed by security system triggers alarm.
- Free egress available at all times by use of the inside lever.
- Door may be opened from outside by means of card reader, or mechanical key (emergency override).
- In an emergency, the panic may be locked by signal from a EB Button located inside the Classroom.

SH-2D

Chemistry Prep & Storage
Each [CR, REX, DPS] Door to Have: (WD x HMF) NR

3	Hinges	3CB1HW x NRP	630	IVE
1	Transfer Hinge	3CB1HW x TW8 x EXTENDED LEADS TO HEAD	630	IVE
1	Wire Harness		----	SCH
1	Electrified Lock	L9092 LEU-RX x CON 06A-24VDC	630	SCH
1	Permanent Core	MEDECO CORE TO MATCH OWNER STD.	626	MED
1	Closer	4040XP-EDA-MC TB	689	LCN
1	Armor Plate	KA064 34" x ~~1~~2" LDW B4E-HVY CTSK	630	TRM ***ADD-2***
1	Floor Stop	RM850	630	ROC
1	Set Adhesive Seal	*488_-S x 3M TAPE x MITRED	TBD	ZER
1	Wiring Diagram	CUSTOM POINT-TO-POINT	---	XXX
1	Riser Diagram	CUSTOM ELECTRIC HARDWARE ELEVATION	---	XXX
1	Alarm Contact	1076D	TBD	INT

* INSTALL SEALS TIGHT TO FRAME CORNERS. INSTALL WITH EXTRA CARE THAT ALL OF ADHESIVE TAPE IS FULLY ENGAGED.
CARD READERLOW VOLTAGE POWER AND EMERGENCY,
BUTTON AND WIRING BY DIVISION 28.
CONDUIT AND WIRING BY DIVISION 26.

Theory of Operation:

- Alarm contact monitors door open/closed status. Use of card reader or use of inside lever (REX) shunts alarm contact for legal opening. Door prop past time allowed by security system triggers alarm.
- Free egress available at all times by use of the inside lever.
- Door may be opened from outside by means of card reader, or mechanical key (emergency override).
- In an emergency, the panic may be locked by signal from a EB Button located inside the Classroom

Open Office
Each [DPS] Door to Have: (HMD x HMF) NR

4	Hinges	3CB1HW x NRP	630	IVE
1	Utility Lock	L9060L-06A	630	SCH
1	Mortise Cylinder	LFIC-32	626	MED
1	Permanent Core	MEDECO CORE TO MATCH OWNER STD.	626	MED
1	Edge Guard	EG-308-AS CUT: HARDWARE	630	MAR
1	Closer	4040XP-REG-H MC TB	689	LCN
1	Kick Plate	KO064~~10~~12" x 2" LDW B4E-HVY CTSK	630	TRM ***ADD-2***
1	Set Seals	*488_-S x 3M x MITRED	TBD	ZER
1	Floor Stop	RM850	630	ROC
1	Wiring Diagram	CUSTOM POINT-TO-POINT	---	XXX
1	Riser Diagram	CUSTOM ELECTRIC HARDWARE ELEVATION	---	XXX
1	Alarm Contact	1076D	TBD	INT

* INSTALL SEALS TIGHT TO FRAME CORNERS. INSTALL WITH EXTRA CARE THAT ALL OF ADHESIVE TAPE IS FULLY ENGAGED.
WIRING BY DIVISION 28.
CONDUIT AND WIRING BY DIVISION 26.

Exit Corridor
Each RR, REX, DPS] Pair to Have: (AL/GLD x ALF) NR

REQUIRES WIDE STILE DOOR WITH 7" HIGH TOP RAIL

2	Cont. Hinges	SL24HD –VD-EPT	***	SEL
2	Electric Power Transfers	EPT-10 x CON	689	VON
~~1~~	~~Electric Panic Device~~	~~AX-RX-QEL-LD9847-EO-PA- CON.~~	~~630~~	~~VON~~
~~1~~	~~Electric Panic Device~~	~~AX-RX-QEL-LD9847-NL-OP-PA-CON.~~	~~630~~	~~VON~~
1	Electric Panic Device	QEL-RX- LD3547EO-PA- CON.	630	VON
1	Electric Panic Device	QEL-RX- LD3547A- NL-OP-PA-CON.	630	VON
2	Wire Harness		----	VON
1	Rim Cylinder	LFIC-32	626	MED
1	Permanent Core	MEDECO CORE TO MATCH OWNER STD.	626	MED
2	Door Pulls	1161.SOLID FULL HEIIGHT 5" BACKSET MOUNTING TYPE "N"	630	TRM
~~2~~	~~Overhead Concealed Closers~~	~~PH91N~~	~~689~~	~~RIX~~
2	Closers	4040XP-TOP JAMB -TB	SRIx689	LCN
~~2~~1	Floor Stop~~s~~	1214CK x 1268CK @ LHR LEAF	626	TRM
1	Overhead Conc. Stop	1ADJ-SERIES @ RHR LEAF	630	RIXW
1	Threshold	AS PER DETAILS x MS & ES	AL	PEM
2	Door Sweeps	477_	TBD	ZER
1	Power Supply	PS902-2RS		VON
2	Alarm Contacts	1076D BY SECURITY	TBD	INT
1	Wiring Diagram	CUSTOM POINT-TO-POINT	---	XXX
1	Riser Diagram	CUSTOM ELECTRIC HARDWARE ELEVATION	---	XXX

3-INCH DIAMETER CORE DRILL FOR FLOOR STOP ANCHOR BY DIVISION 3; SET ANCHOR FLUSH IN CONCRETE. MOUNT FLOOR STOP AT LEFT HAND REVERSE LEAF CLOSE TO WALL TO AVOID TRIPPING HAZARD.
FRAME SEAL & MEETING STILE ASTRAGAL BY ALUMINUM STOREFRONT SECTION.
CONDUIT AND WIRING BY DIVISION 26.

Theory of Operation: **B**

- Alarm contact monitors door open/closed status. Use of timer control switch or use of inside panic bar (REX) shunts alarm contact for legal opening. Door prop past time allowed by security system triggers alarm.
- Free egress available at all times by use of the inside panic bar.
- Door may be opened from outside by means of timer unlock, or mechanical key (emergency override).
- During classroom hours, electric panics are normally powered (unlocked).
- In an emergency, the panics may be locked by signal from a central security point.
- Doors normally closed manually overhead concealed closers.
- Push plate switches available for automatic operation. Inside push plate switch is always available. Outside push plate switch is always available during "open" hours; after hours, outside push plate switch is inactive unless card reader is first used.
- 3-position switch used to turn off auto door operators.

SH-5

Mechanical
Each [CR, REX, DPS] Door to Have: (HMD x HMF) NR

7	Hinges	3CB1HW x NRP	630	IVE
1	Transfer Hinge	3CB1HW x TW8 x EXTENDED LEADS TO HEAD	630	IVE
1	Wire Harness		----	SCH
1	Set Auto Flush Bolt	842	626	DCI
1	Dust Proof Strike	82	626	DCI
1	Coordinator	600-SERIES	600	DCI
1	Electrified Lock	L9092LEU-RX 06A x CON-24VDC 7/8" LTC STK	630	SCH
1	Permanent Core	MEDECO CORE TO MATCH OWNER STD.	626	MED
2	Closers	4040XP -SCUSH-MC TB SRI	x689	LCN
1	Set Seals	2891_S CSK SCREWS	TBD	PEM
1	Astragal	357SP x CSK x TB SPECIAL HOLE PATTERN TO AVOID LOCK CASE	600	PEM
2	Door Sweeps	477_	TBD	ZER
1	Wiring Diagram	CUSTOM POINT-TO-POINT	---	XXX
1	Riser Diagram	CUSTOM ELECTRIC HARDWARE ELEVATION	---	XXX
~~1~~2	Alarm Contacts	1076D BY SECURITY	TBD	INT
1	Threshold	AS PER DETAILS x MS & ES	AL	PEM ***ADD-2***

CARD READER, LOW VOLTAGE POWER AND EMERGENCY BUTTON AND WIRING BY DIVISION 28.
CONDUIT AND WIRING BY DIVISION 26.
PROVIDE CLOSER THRU-BOLT FINISH TO MATCH DOOR FINISH.
.
Theory of Operation:

- Alarm contact monitors door open/closed status. Use of card reader or use of inside push pad (REX) shunts alarm contact for legal opening. Door prop past time allowed by security system triggers alarm.
- Free egress available at all times by use of the inside push pad.
- Door may be opened from outside by means of card reader or mechanical key (emergency override).

SH-5A

Machine Room, Electrical Closet
Each [DPS] Door to Have: (HMD x HMF) Labeled

4	Hinges	3CB1HW x NRP	630	IVE
1	Storeroom Lock	L9080L-06A	630	SCH
1	Mortise Cylinder	LFIC-32	626	MED
1	Permanent Core	MEDECO CORE TO MATCH OWNER STD.	626	MED
1	Closers	4040XP -SCUSH-MC TB SRI	x689	LCN
1	Set Seal	332CR HEAD & JAMBS	AL	PEM
1	Wiring Diagram	CUSTOM POINT-TO-POINT	---	XXX
1	Riser Diagram	CUSTOM ELECTRIC HARDWARE ELEVATION	---	XXX
1	Alarm Contact	1076D BY SECURITY	TBD	INT

WIRING BY DIVISION 28.
CONDUIT AND WIRING BY DIVISION 26.
PROVIDE CLOSER THRU-BOLT FINISH TO MATCH DOOR FINISH.

Ext. from Science Learning Center

Each [CR, DPS, EA] Door to Have: (AL/GLD x ALF)			NR	
1	Cont. Hinge	SL24HD —VD-EPT	***	SEL
1	Panic Device	AX-QEL-XP98NL-OP-PA x LESS PULL	630	VON
1	Rim Cylinder	LFIC-32	626	MED
2	Permanent Core	MEDECO CORE TO MATCH OWNER STD.	626	MED
1	Door Pull	1161.SOLID FULL HEIGHT 5" BACKSET MOUNTING TYPE "N"	630	TRM
1	OHC Closer	PH91-N	689	RIX
1	Floor Stop	1214CK x 1268CK	626	TRI
1	Threshold	AS PER DETAILS x MS & ES	AL	PEM
1	Door Sweeps	477_	TBD	ZER
1	Power Supply	PS902-2RS		VON
1	Alarm Contacts	1076D BY SECURITY	TBD	INT
1	Wiring Diagram	CUSTOM POINT-TO-POINT	---	XXX
1	Riser Diagram	CUSTOM ELECTRIC HARDWARE ELEVATION	---	XXX

3-INCH DIAMETER CORE DRILL FOR FLOOR STOP ANCHOR BY DIVISION 3; SET ANCHOR FLUSH IN CONCRETE.
FRAME SEAL BY ALUMINUM STOREFRONT SECTION.CONDUIT AND WIRING BY DIVISION 26.
CARD READER, DPS, AND EMERGENCY ALARM HORN BY DIVISION 28

Theory of Operation:

- Alarm contact monitors door open/closed status. Use of card reader, timer control, shunts alarm contact for legal opening. Door prop past time allowed by security system triggers alarm.
- Free egress available at all times by use of the inside panic bar but the Exit Alarm [EA] will sound.
- Door may be opened from outside by means of card reader, timer unlock, or mechanical key (emergency override).
- In an emergency, the panics may be locked by signal from a central security point.

Geology/Physical Science Lab & Lecture

Each [EH, REX I/L] Pair Un-Equal Leaf to Have: (WD x HMF)			NR.	
1	Elec. Cont. Hinge	FM-300-WEP -CTP-	630	MAR
1	Cont. Hinge	FM-300-WEP	630	MAR
1	Electric Power Transfer	EPT-10 x CON	689	VON
1	Electrified Lock	L9092LEU-RX- 06A x CON-24VDC 7/8" LTC STK	630	SCH
2	Manual Flush Bolts	FB358	626	IVE
1	Dust Proof Strike	DP2	626	IVE
1	Wire Harness		----	VON
1	Permanent Core	MEDECO CORE TO MATCH OWNER STD.	626	MED
1	Closer	4040XP-EDA-MC TB @ ACTIVE LEAF SRI	x689	LCN
2	Kick Plates	KO064~~-10~~12" x 1" LDW B4E-HVY CTSK	630	TRM ***ADD-2***
2	Floor Stops	RM850	630	ROC
1	Astragal	355CS	AL	PEM
1	Set Seal	332CR HEAD & JAMBS	AL	PEM
2	Alarm Contacts	1076D BY SECURITY	TBD	GES
1	Wiring Diagram	CUSTOM POINT-TO-POINT	---	XXX
1	Riser Diagram	CUSTOM ELECTRIC HARDWARE ELEVATION	---	XXX

LOW VOLTAGE POWER AND EMERGENCY BUTTON AND WIRING BY DIVISION 28.
CONDUIT AND WIRING BY DIVISION 26.
I/L ELECTRIC LOCK ACTIVATED BY NEAR BY CARD READER AS INDICATED IN DOOR SCHEDULE
NOTE: * INSTALL SEALS TIGHT TO FRAME CORNERS. INSTALL WITH EXTRA CARE THAT ALL OF ADHESIVE TAPE IS FULLY ENGAGED.

Theory of Operation:

- Alarm contact monitors door open/closed status. Use of card reader, timer control, or use of inside panic bar (REX) shunts alarm contact for legal opening. Door prop past time allowed by security system triggers alarm.
- Free egress available at all times by use of the inside lever.
- Door may be opened from outside by means of card reader, timer unlock, or mechanical key (emergency override).
- During classroom hours, electric panic is normally unlocked.
- In an emergency, the electric lock may be locked by signal from a EB Button located inside the Classroom.

AT DOOR ~~212A~~ 309B, 315B ADD THE FOLLOWING***: ADD-2***

2	Auto. Door Bottoms	369AA x Z49	AL	ZER
1	Threshold	151A x MS & ES	AL	PEM

SH-7A

Science Learning Center
Each [CR, REX, DPS, EB] Door to Have: (WD x HMF) 45 Min.

1	Elec. Transfer Hinge	FM-300- WEP-CTP	630	MAR
1	Electric Power Transfers	EPT-10 x CON	689	VON
1	Electric Panic Device	AX-RX-9875L-F x E996L-PA-CON.	630	VON
1	Wire Harness		----	VON
1	Mortise Cylinder	LFIC-32	626	MED
1	Permanent Core	MEDECO CORE TO MATCH OWNER STD.	626	MED
1	Closer	4040XP SCUSH-MC TB	SRIx689	LCN
1	Kick Plate	KO064~~10~~12" x 2" LDW B4E-HVY CTSK	630	TRM ***ADD-2***
1	Set Seal	332CR HEAD & JAMBS	AL	PEM
1	Threshold	AS PER DETAILS x MS & ES	AL	PEM
1	Alarm Contacts	1076D BY SECURITY	TBD	INT

CARD READER, LOW VOLTAGE POWER AND EMERGENCY BUTTON AND WIRING BY DIVISION 28.
CONDUIT AND WIRING BY DIVISION 26.
NOTES: * INSTALL SEALS TIGHT TO FRAME CORNERS. INSTALL WITH EXTRA CARE THAT ALL OFADHESIVE TAPE IS FULLY ENGAGED.

Theory of Operation:

- Alarm contact monitors door open/closed status. Use of card reader, timer control, or use of inside panic bar (REX) shunts alarm contact for legal opening. Door prop past time allowed by security system triggers alarm.
- Free egress available at all times by use of the inside panic bar.
- Door may be opened from outside by means of card reader, timer unlock, or mechanical key (emergency override).
- During classroom hours, electric panic is normally unlocked.
- In an emergency, the panic may be locked by signal from a EB Button located inside the Classroom.

SH-7B

Physics Prep & Storage, Organic Chemistry Lab, Centralized Prep & Storage

		Each [CR, REX, DPS, EB] Pair Un-Equal Leaf to Have: (WD- x HMF)	NR.	
1	Elec. Cont. Hinge	FM-300-WEP –CTP	630	MAR
1	Cont. Hinge	FM-300-WEP	630	MAR
1	Electric Power Transfer	EPT-10 x CON	689	VON
2	Manual Flush Bolts	FB358	626	IVE
1	Dust Proof Strike	DP2	626	IVE
1	Electrified Lock	L9092LEU-RX- 06A x CON-24VDC 7/8” LTC STK	630	SCH
1	Wire Harness		----	VON
1	Permanent Core	MEDECO CORE TO MATCH OWNER STD.	626	MED
1	Closer	4040XP-REG-MC TB @ ACTIVE LEAF X ST-1630	689	LCN
2	Armor Plates	KA064 34” x 1” LDW B4E-HVY CTSK-X UL ENGRAVED	630	TRM
1	Overhead Stop	1ADJ-SERIES @ ACTIVE LEAF	630	RIX
1	Floor Stop	RM850 @ INACTIVE LEAF	630	ROC
1	Astragal	355CS*	AL	PEM
1	Set Seal	332CR HEAD & JAMBS	AL	PEM
2	Alarm Contacts	1076D BY SECURITY	TBD	GES
1	Wiring Diagram	CUSTOM POINT-TO-POINT	---	XXX
1	Riser Diagram	CUSTOM ELECTRIC HARDWARE ELEVATION	---	XXX

CARD READER, LOW VOLTAGE POWER AND EMERGENCY BUTTON AND WIRING BY DIVISION 28.
CONDUIT AND WIRING BY DIVISION 26.
* INSTALL ON PUSH SIDE INACTIVE LEAF.

Theory of Operation:

- Alarm contact monitors door open/closed status. Use of card reader or use of inside push pad (REX) shunts alarm contact for legal opening. Door prop past time allowed by security system triggers alarm.
- Free egress available at all times by use of the inside lever.
- Door may be opened from outside by means of card reader or mechanical key (emergency override).

SH-7C

Geology/Physical Science Lab & Lecture

		Each [CR, REX, DPS] Pair Un-Equal Leaf to Have: (WD x HMF)	NR.	
1	Elec. Cont. Hinge	FM-300-WEP -CTP	630	MAR
1	Cont. Hinge	FM-300-WEP	630	MAR
1	Electric Power Transfer	EPT-10 x CON	689	VON
2	Manual Flush Bolts	FB358	626	IVE
1	Dust Proof Strike	DP2	626	IVE
1	Electric Panic Device	AX-QEL-RX-9875L x E996L-PA-CON. 24 VDC	630	VON
1	Wire Harness		----	VON
1	Mortise Cylinder	LFIC-32	626	MED
1	Permanent Core	MEDECO CORE TO MATCH OWNER STD.	626	MED
1	Closer	4040XP-EDA-MC TB @ ACTIVE LEAF	689	LCN
2	Armor Plates	KA064 34” x 1” LDW B4E-HVY CTSK- x UL ENGRAVED	630	TRM
2	Floor Stops	RM850	630	ROC
1	Astragal	355CS	AL	PEM
1	Set Seal	332CR HEAD & JAMBS	AL	PEM
2	Alarm Contacts	1076D BY SECURITY	TBD	GES
1	Wiring Diagram	CUSTOM POINT-TO-POINT	---	XXX
1	Riser Diagram	CUSTOM ELECTRIC HARDWARE ELEVATION	---	XXX

CARD READER, LOW VOLTAGE POWER AND EMERGENCY BUTTON AND WIRING BY DIVISION 28.
CONDUIT AND WIRING BY DIVISION 26.
** INSTALL ON PUSH SIDE INACTIVE LEAF.

SH-7C.1

Geology Earth Science Lab
Each [EH, REX I/L, EB, DPS] Pair Un-Equal Leaf to Have: (WD x HMF) NR.

1	Elec. Cont. Hinge	FM-300-WEP -CTP-RADBP -CUT FOR HARDWARE	630	MAR	
1	Cont. Hinge	FM-300-WEP- RADBP -CUT FOR HARDWARE	630	MAR	
2	Manual Flush Bolts	FB358	626	IVE	
1	Dust Proof Strike	DP2	626	IVE	
1	Electric Power Transfer	EPT-10 x CON	689	VON	
1	Electric Panic Device	AX-RX-9875L x E996L x CON x 24VDC-PA	630	VON	
1	Wire Harness		----	VON	
1	Mortise Cylinder	LFIC-32	626	MED	
1	Permanent Core	MEDECO CORE TO MATCH OWNER STD.	626	MED	
1	Closer	4040XP-EDA-MC TB @ ACTIVE LEAF	SRIx689	LCN	
2	Kick Plates	KO064~~10~~12" x 1" LDW B4E-HVY CTSK	630	TRM	***ADD-2***
2	Floor Stops	RM850	630	ROC	
1	Astragal	355CS	AL	PEM	
1	Set Seal	332CR HEAD & JAMBS	AL	PEM	
2	Auto. Door Bottoms	369AA x Z49	AL	ZER	
1	Threshold	151A x MS & ES	AL	PEM	
2	Alarm Contacts	1076D BY SECURITY	TBD	GES	
1	Wiring Diagram	CUSTOM POINT-TO-POINT	---	XXX	
1	Riser Diagram	CUSTOM ELECTRIC HARDWARE ELEVATION	---	XXX	

LOW VOLTAGE POWER AND EMERGENCY BUTTON AND WIRING BY DIVISION 28.
CONDUIT AND WIRING BY DIVISION 26.
I/L ELECTRIC LOCK ACTIVATED BY NEAR BY CARD READER AS INDICATED IN DOOR SCHEDULE

Theory of Operation:

- Alarm contact monitors door open/closed status. Use of card reader, timer control, or use of inside panic bar (REX) shunts alarm contact for legal opening. Door prop past time allowed by security system triggers alarm.
- Free egress available at all times by use of the inside panic bar.
- Door may be opened from outside by means of card reader, timer unlock, or mechanical key (emergency override).
- During classroom hours, electric panic is normally unlocked.
- In an emergency, the panic may be locked by signal from a EB Button located inside the Classroom.

SH-7D

General Biology Lab

Each [CR, or EH, REX, DPS] Pair Un-Equal Leaf to Have: (WD x HMF)			NR.	
1	Elec. Cont. Hinge	FM-300-WEP -CTP	630	MAR
1	Cont. Hinge	FM-300-WEP	630	MAR
1	Electric Power Transfer	EPT-10 x CON	689	VON
2	Manual Flush Bolts	FB358	626	IVE
1	Dust Proof Strike	DP2	626	IVE
1	Electric Panic Device	AX- RX-9875L x E996L x 24VDC x -PA-CON	630	VON
1	Wire Harness		----	VON
1	Mortise Cylinder	LFIC-32	626	MED
1	Permanent Core	MEDECO CORE TO MATCH OWNER STD.	626	MED
1	Closer	4040XP-EDA-MC TB @ ACTIVE LEAF	689	LCN
2	Armor Plates	KA064 34” x 1” LDW B4E-HVY CTSK-	630	TRM
1	Overhead Stop	1ADJ-SERIES @ ACTIVE LEAF	630	RIX
1	Floor Stop	RM850 @ INACTIVE LEAF	630	ROC
1	Astragal	355CS	AL	PEM
1	Set Adhesive Seal	*488_-S x 3M TAPE x MITRED	TBD	ZER
2	Alarm Contacts	1076D BY SECURITY	TBD	GES
1	Wiring Diagram	CUSTOM POINT-TO-POINT	---	XXX
1	Riser Diagram	CUSTOM ELECTRIC HARDWARE ELEVATION	---	XXX

CARD READER, LOW VOLTAGE POWER AND EMERGENCY BUTTON AND WIRING BY DIVISION 28.
CONDUIT AND WIRING BY DIVISION 26.
NOTES: * INSTALL SEALS TIGHT TO FRAME CORNERS. INSTALL WITH EXTRA CARE THAT ALL OF THE ADHESIVE TAPE IS FULLY ENGAGED.

SH-7E

Physics Lab, Biology Lab, Science Lab ***ADD-2***
Each [CR, RX, DPS or I/L, EB] Pair Un-Equal Leaf to Have: (WD x HMF) NR. ***ADD-2***

1	Elec. Cont. Hinge	FM-300-WEP -CTP	630	MAR
1	Cont. Hinge	FM-300-WEP	630	MAR
1	Electric Power Transfer	EPT-10 x CON	689	VON
1	Manual Flush Bolts	FB358 (TOP BOLT ONLY)	626	IVE
1	Electrified Lock	L9092LEU-RX- 06A x CON -24VDC 7/8" LTC STK	630	SCH
1	Wire Harness		----	VON
1	Mortise Cylinder	LFIC-32	626	MED
1	Permanent Core	MEDECO CORE TO MATCH OWNER STD.	626	MED
1	Closer	4040XP-EDA-MC TB @ ACTIVE LEAF	689	LCN
2	Kick Plates	KO064~~10~~12" x 1" LDW B4E-HVY CTSK	630	TRM ***ADD-2***
2	Floor Stops	RM850	630	ROC
1	Astragal	355CS	AL	PEM
1	Set Seal	332CR HEAD & JAMBS	AL	PEM
2	Auto. Door Bottoms	369AA x Z49	AL	ZER
1	Threshold	151A x MS & ES	AL	PEM
2	Alarm Contacts	1076D BY SECURITY	TBD	GES
1	Wiring Diagram	CUSTOM POINT-TO-POINT	---	XXX
1	Riser Diagram	CUSTOM ELECTRIC HARDWARE ELEVATION	---	XXX

CARD READERLOW VOLTAGE POWER AND EMERGENCY BUTTON AND WIRING BY DIVISION 28.
CONDUIT AND WIRING BY DIVISION 26.

Emergency Electrical
Each [CR, EPH, REX, DPS] Door to Have: (HMD x HMF) NR

3	Hinges	3CB1HW x NRP	630	IVE
1	Transfer Hinge	3CB1HW x TW8 x EXTENDED LEADS TO HEAD	630	IVE
1	Wire Harness		----	SCH
1	Panic Device	AX-RX-QEL-98NL-OP-PA x LESS PULL x CON 24 VDC	630	VON
1	Rim Cylinder	LFIC-32	626	MED
1	Permanent Core	MEDECO CORE TO MATCH OWNER STD.	626	MED
1	Anti-Vandal Pull	VR910NL	630	VON
1	Closer	4040XP- -SCUSH-MC TB	SRIx689	LCN
1	Door Sweep	477_	TBD	ZER
1	Threshold	AS PER DETAILS x MS & ES	AL	PEM
1	Set Seals	2891_S CSK SCREWS	TBD	PEM
1	Alarm Contact	1076D BY SECURITY	TBD	INT
1	Power Supply	PS902-2RS		VON

INSTALL CLOSER ARM ON FRAME SEAL; DO NOT CUT SEAL
PROVIDE CLOSER THRU-BOLT FINISH TO MATCH DOOR FINISH.
CARD READER AND WIRING BY DIVISION 28.
CONDUIT AND WIRING BY DIVISION 26.

Theory of Operation:

- Alarm contact monitors door open/closed status. Use of card reader, timer control, or use of inside panic bar (REX) shunts alarm contact for legal opening. Door prop past time allowed by security system triggers alarm.
- Free egress available at all times by use of the inside panic bar.
- Door may be opened from outside by means of card reader, timer unlock, or mechanical key (emergency override).

Large Classroom
Each [CR, REX, DPS, EB], I/L WITH _ Door to Have: (WD x HMF) 45 Min.

1	Continuous Hinge	FM-300-HT-CTP	630	MAR
1	Electric Power Transfers	EPT-10 x CON ~~FOR REACTIVATION SENSOR/PH~~ ***ADD-2***	689	VON
1	Electric Panic Device	AX-RX- -9875L -F x E996-PA-CON.	630	VON
1	Wire Harness		----	VON
1	Mortise Cylinder	LFIC-32	626	MED
1	Permanent Core	MEDECO CORE TO MATCH OWNER STD.	626	MED
1	Closer	4040XP-EDA-MC TB	689	LCN
1	Kick Plates	KO064~~10~~12" x 2" LDW B4E-HVY CTSK	630	TRM ***ADD-2***
1	Floor Stop	RM850	630	ROC
1	Set Seal	332CR HEAD & JAMBS	AL	PEM
1	Auto. Door Bottom	369AA x Z49	AL	ZER
1	Threshold	151A x MS & ES	AL	PEM
1	Alarm Contact	1076D BY SECURITY	TBD	GES
1	Wiring Diagram	CUSTOM POINT-TO-POINT	---	XXX
1	Riser Diagram	CUSTOM ELECTRIC HARDWARE ELEVATION	---	XXX

CONDUIT AND WIRING BY DIVISION 26.
CARD READER, EMERGENCY BUTTON AND WIRING BY DIVISION 28.

Theory of Operation:

- Alarm contact monitors door open/closed status. Use of card reader, timer control, or use of inside panic bar (REX) shunts alarm contact for legal opening. Door prop past time allowed by security system triggers alarm.
- Free egress available at all times by use of the inside panic bar.
- Door may be opened from outside by means of card reader, timer unlock, or mechanical key (emergency override).
- During classroom hours, electric panic is normally unlocked.
- In an emergency, the panic may be locked by signal from a EB Button located inside the Classroom.

SH-9A

Large Classroom
Each [I/L WITH _, DPS, EB] Door to Have: (WD x HMF) 45 Min.

1	Continuous Hinge	FM-300-HT-CTP	630	MAR	
1	Electric Power Transfers	EPT-10 x CON	689	VON	
1	Electric Panic Device	AX-RX- 9875L- -F x E996L-PA-CON.	630	VON	
1	Wire Harness		----	VON	
1	Mortise Cylinder	LFIC-32	626	MED	
1	Permanent Core	MEDECO CORE TO MATCH OWNER STD.	626	MED	
1	Closer	4040XP-EDA-MC TB	SRIx689	LCN	
1	Kick Plates	KO064~~-10~~12" x 2" LDW B4E-HVY CTSK	630	TRM	***ADD-2***
1	Floor Stop	RM850	630	ROC	
1	Set Seal	332CR HEAD & JAMBS	AL	PEM	
1	Alarm Contact	1076D	TBD	GES	
1	Wiring Diagram	CUSTOM POINT-TO-POINT	---	XXX	
1	Riser Diagram	CUSTOM ELECTRIC HARDWARE ELEVATION	---	XXX	

I/S ELECTRIC PANIC ACTIVATED BY NEAR BY CARD READER AS INDICATED IN DOOR SCHEDULE
I/L, EMERGENCY BUTTON, AND WIRING BY DIVISION 28.
CONDUIT AND WIRING BY DIVISION 26.

Theory of Operation:

- Alarm contact monitors door open/closed status. Use of card reader, timer control, or use of inside panic bar (REX) shunts alarm contact for legal opening. Door prop past time allowed by security system triggers alarm.
- Free egress available at all times by use of the inside panic bar.
- Door may be opened from outside by means of card reader, timer unlock, or mechanical key (emergency override).
- During classroom hours, electric panic is normally unlocked.
- In an emergency, the panic may be locked by signal from a EB Button located inside the Classroom.
- Door to interlock [I/L] to another door in the same classroom.

SH-11B

Engineering Lab
Each [EPH, I/L. REX, DPS] Pair to Have: (WD x HMF) NR

2	Continuous Hinges	FM-300-WEP- RADP-CTP		630	MAR
2	Electric Power Transfers	EPT-10 x CON		689	VON
1	Electric Panic Device	AX-RX-QEL-WDC-9847EO-LBR-PA -CON.		630	VON
1	Electric Panic Device	AX-QEL-RX-WDC-9847L-LBR-PA-CON x 996L		630	VON
2	Wire Harnesses			----	VON
1	Rim Cylinder	LFIC-32		626	MED
1	Permanent Core	MEDECO CORE TO MATCH OWNER STD.		626	MED
2	Closers	4040XP-EDA-MC TB	SRI	x689	LCN
2	Kick Plates	KO064 ~~10~~12" x 1" LDW B4E-HVY CTSK		630	TRM ***ADD-2***
2	Floor Stops	RM850		630	ROC
2	Automatic Door Bottoms	369A-Z49-PULL		TBD	ZER
1	Threshold	151A x MS & ES		AL	PEM
1	Set Seal	332CR HEAD & JAMBS		AL	PEM
1	Power Supply	PS902-2RS-4RL			VON
1	Set Astragal	351C x 351CS		AL	PEM
2	Alarm Contacts	1076D BY SECURITY		TBD	INT

* INSTALL SEALS TIGHT TO FRAME CORNERS. INSTALL WITH EXTRA CARE THAT ALL OF ADHESIVE TAPE IS FULLY ENGAGED.
CARD READER, LOW VOLTAGE POWER, EMERGENCY BUTTON AND WIRING BY DIVISION 28.
FURNISH WOOD DOOR BRAND DOES NOT REQUIRED METAL EDGES.
I/S ELECTRIC LOCK ACTIVATED BY NEAR BY CARD READER AS INDICATED IN DOOR SCHEDULE CONDUIT AND WIRING BY DIVISION 26.

SH-12

Engineering Prep & Storage
Each [CR, REX, DPS] Door to Have: (WD x HMF) NR

3	Hinges	3CB1HW	630	IVE
1	Transfer Hinge	3CB1HW x TW8 x EXTENDED LEADS TO HEAD	630	IVE
1	Wire Harness		----	SCH
1	Electrified Lock	L9092LEU-RX x CON 06A-24VDC	630	SCH
1	Permanent Core	MEDECO CORE TO MATCH OWNER STD.	626	MED
1	Mortise Cylinder	TYPE AS REQUIRED	626	MED
1	Permanent Core	MEDECO CORE TO MATCH OWNER STD.	626	MED
1	Closer	4040XP-18TJ x ST1630 MC TB	SRIx689	LCN
1	Armor Plate	KA064 34" x 2" LDW B4E-HVY CTSK	630	TRM
1	OHC Stop	2-SERIES	630	RIX
1	Set Seal	332CR HEAD & JAMBS	AL	PEM
1	Threshold	AS PER DETAIL		
1	Alarm Contact	1076D BY SECURITY DIVISION 28	TBD	INT

CARD READER, LOW VOLTAGE POWER, EMERGENCY BUTTON AND WIRING BY DIVISION 28.CONDUIT AND WIRING BY DIVISION 26.

Theory of Operation:

- Alarm contact monitors door open/closed status. Use of card reader or use of inside le (REX) shunts alarm contact for legal opening. Door prop past time allowed by security system triggers alarm.
- Free egress available at all times by use of the inside lever.
- Door may be opened from outside by means of card reader or mechanical key (emergency override).

SH-13

Main Electrical Room
Each [DPS] Door to Have: (HMD x HMF) 45 Min.

1	Continuous Hinges	FM-300-HT-RADBP	630	MAR
1	Fire Panic Device	AX-98L-NL-F-PA x 996L-06	630	VON
1	Rim Cylinder	LFIC-32	626	MED
1	Permanent Core	MEDECO CORE TO MATCH OWNER STD.	626	MED
1	Closer	4040XP-SCUSH-MC TB	SRIx689	LCN
1	Kick Plate	KO064~~10~~12" x 2" LDW B4E-HVY CTSK	630	TRM ***ADD-2***
1	Set Seal	332CR HEAD & JAMBS	AL	PEM
1	Threshold	AS PER DETAIL		
1	Alarm Contact	1076D BY SECURITY DIVISION 28	TBD	INT

CONDUIT AND WIRING BY DIVISION 26.

SH-14

Electrical Closet
Each [DPS] Pair to Have: (HMD x HMF) NR

8	Hinges	3CB1 x NRP	630	IVE
2	Manual Flush Bolt	FB358	626	IVE
1	Dust Proof Strike	DP2	626	IVE
1	Storeroom Lock	L9080L-06A 7/8" LTC STRIKE	630	SCH
1	Mortise Cylinder	LFIC-32	626	MED
1	Permanent Core	MEDECO CORE TO MATCH OWNER STD.	626	MED
1	Set Seal	332CR HEAD & JAMBS	AL	PEM
1	Astragal	357SP x CSK x TB SPECIAL HOLE PATTERN TO AVOID LOCK CASE	600	PEM
2	Overhead Stop & Hold	2-SERIES	630	RIX
2	Alarm Contacts	1076D BY SECURITY DIVISION 28	TBD	INT

CONDUIT AND WIRING BY DIVISION 26.
~~* INSTALL SEALS TIGHT TO FRAME CORNERS. INSTALL WITH EXTRA CARE THAT ALL OF ADHESIVE TAPE IS FULLY ENGAGED.~~ ***ADD-2***

SH-15

Reception
Each[CR, EPH, DPS] Door to Have: (AL/GL x AL) NR

1	Cont. Hinge	SL24HD —VD-EPT	***	SEL
1	Panic Device	AX-QEL-XP98NL-OP-PA x LESS PULL	630	VON
1	Rim Cylinder	LFIC-32	626	MED
2	Permanent Core	MEDECO CORE TO MATCH OWNER STD.	626	MED
1	Door Pull	1161.SOLID FULL HEIGHT 5" BACKSET MOUNTING TYPE "N"	630	TRM
1	OHC Closer	PH91-N	689	RIX
1	Threshold	AS PER DETAILS x MS & ES	AL	PEM
1	Power Supply	PS902-2RS		VON
1	Alarm Contacts	1076D BY SECURITY	TBD	INT
1	Wiring Diagram	CUSTOM POINT-TO-POINT	---	XXX
1	Riser Diagram	CUSTOM ELECTRIC HARDWARE ELEVATION	---	XXX

FRAME SEAL BY ALUMINUM STOREFRONT SECTION.CONDUIT AND WIRING BY DIVISION 26.
CARD READER, DPS, AND EMERGENCY ALARM HORN BY DIVISION 28

Theory of Operation:

- Alarm contact monitors door open/closed status. Use of card reader, timer control, shunts alarm contact for legal opening. Door prop past time allowed by security system triggers alarm.
- Free egress available at all times by use of the inside panic bar but the Exit Alarm [EA] will sound.
- Door may be opened from outside by means of card reader, timer unlock, or mechanical key (emergency override).
- In an emergency, the panics may be locked by signal from a central security point.

Stair to Roof

Each [DPS] Gate to Have: (TS x TS)				NR
2	Weldable Gate Hinges	i-8513 x Blank for Welding	600	BRO
1	Storeroom Lock	L9080L-06A*	630	SCH
1	Mortise Cylinder	LFIC-32	626	MED
1	Permanent Core	MEDECO CORE TO MATCH OWNER STD.	626	MED
1	S.S Closer	STA 8916 ARP x FMC x SNB1 x Backplate as required**	630	DOR
1	Gate Mounting Box	K-BXMOR1	600	KEE
1	Weldable Strike Box	K-BXSTR	600	KEE
1	Wiring Diagram	CUSTOM POINT-TO-POINT	---	XXX
1	Riser Diagram	CUSTOM ELECTRIC HARDWARE ELEVATION	---	XXX
1	Alarm Contact	SURFACE MTD (BY DIVISION 28)	TBD	GES

BALANCE OF HARDWARE BY GATE FABRICATOR.
GATE FABRICATOR SHALL PROVIDE THE CONDUIT AND WIRING BY DIVISION 26.
*MOUNT CYLINDER & CARD READER ON STAIR SIDE
** INSTALL CLOSER ARM ON FRAME SEAL; DO NOT CUT SEAL.

SH-19

Greenhouse
Each [CR, EPH, DPS] Pair to Have: (AL/GD x ALF) NR

REQUIRES WIDE STILE DOOR WITH 7" HIGH TOP RAIL

2	Cont. Hinges	SL24HD –VD-EPT	***	SEL
2	Electric Power Transfers	EPT-10 x CON	689	VON
1	RX-Panic Device	AX-RX-LD9849EO-PA -CON.	630	VON
1	Electric Panic Device	AX-EL-RX-LD-9849NL-OP-PA-CON.	630	VON
2	Wire Harness		----	VON
1	Rim Cylinder	LFIC-32 (DEVICE)	626	MED
1	Permanent Core	MEDECO CORE TO MATCH OWNER STD.	626	MED
2	Door Pulls	1161 SOLID FULL HEIGHT 5" BACKSET MOUNTING TYPE "N"	630	TRM
2	Closers	4040XP-EDA-MC-TB	SRIx689	NOR
2	Floor Stops	1214CK x 1268CK	626	TRI
1	Threshold	AS PER DETAILS x MS & ES	AL	PEM
2	Door Sweeps	477_	TBD	ZER
1	Threshold	AS PER DETAIL		
1	Power Supply	PS902-2RS		VON
2	Alarm Contacts	1076D BY SECURITY DIVISION 28	TBD	INT

CARD READER, LOW VOLTAGE POWER, EMERGENCY BUTTON AND WIRING BY DIVISION 28.CONDUIT AND WIRING BY DIVISION 26.
FRAME SEAL & MEETING STILE ASTRAGAL BY ALUMINUM STOREFRONT SECTION.

SH-20

Greenhouse Exit Door
Each [CR, DPS, REX] Door to Have: ~~(HMD x HMF)~~ (TS x TS) ***ADD-2*** NR.

1	Continuous Elec. Hinges	FM-300-WEP- -CTP	630	MAR
1	Electric Power Transfers	EPT-10 x CON	689	VON
1	RX Panic Device	AX-WP-RX-98NL-OP -PA-CON. LESS PULL	630	VON
1	Electric Strike	9600-24VDC	630	HES
1	Smart Pac	III		HES
1	Rim Cylinder	LFIC-32	626	MED
1	Permanent Core	MEDECO CORE TO MATCH OWNER STD.	626	MED
1	Anti Vandal Pull	1097HA-FC-SP	630	TRM
1	Closer	4040XP-EDA-MC-TB	SRIx689	NOR
1	Floor Stop	1209HA	630	TRM
1	Kick Plate	KO064 10" x 2" LDW B4E-HVY CTSK	630	TRM
3	Silencers	1229A	GRY	TRM

CARD READER, LOW VOLTAGE POWER, AND WIRING BY DIVISION 28.
CONDUIT AND WIRING BY DIVISION 26.

THRESHOLDS

Reference “Threshold Notes and Details” Sheet A080

B1	STONE	BY OTHERS		
B2	STONE	BY OTHERS		
C	CARPET TO VINYL	EV2322_ x CAULKING	TBD	PEM
D	CARPET TO TILE	EV2325_ x CAULKING	TBD	PEM
E	CARPET TO CARPET	EV232_ x CAULKING	TBD	PEM
F	CONCRETE TO SAME	158A x MS&ES	TBD	PEM
G	SADDLE @EXTERIOR	276A x MS&ES	TBD	PEM
H	OFFSET SADDLE @ EXT	2727A x MS&ES x MITERED ENDS	TBD	PEM
I	RFT/RSF/VCT TO SAME	151A x MS&ES	TBD	PEM

MISCELLANEOUS

MISC-1

Knox Box

2	Knox Boxes	4400-RMK x ALUMINUMIZATION x ANTI-TAMPER SWITCH	AL	KNX

LOCATE KNOX BOXES AS DIRECTED BY THE ARCHITECT.
CONDUIT BY DIVISION 26
WIRING BY DIVISION 28

END OF SECTION

SECTION 08 71 13
AUTOMATIC SWING DOOR OPERATORS

Revised, Addendum #2, 09/01/2017

PART 1 - GENERAL

1.1 RELATED DOCUMENTS

A. Drawings and general provisions of the Contract, including General and Supplementary Conditions and Division 1 Specification Sections, apply to this Section.

1.2 SUMMARY

A. This Section includes the following types of automatic door operators:
   1. Exterior and interior, automatic swing door operators, low energy, with concealed-in-head, or visible mounting per architectural details.
   2. Automatic door operators shall be configured for doors as follows:
      a. Simultaneous pairs, inswing or out swing.
      b. Single doors, inswing or outswing

B. Related Sections:
   1. Division 8 Section "Door Hardware" for hardware to the extent not specified in this Section.
   2. Division 26 Sections for electrical connections including conduit and wiring for automatic door operators.

1.3 REFERENCES

General: Standards listed by reference, including revisions by issuing authority, form a part of this specification section to extent indicated. Standards listed are identified by issuing authority, authority abbreviation, designation number, title or other designation established by issuing authority. Standards subsequently referenced herein are referred to by issuing authority abbreviation and standard designation.

A. Underwriters Laboratories (UL):
   1. UL 325 – Standard for Door, Drapery, Gate, Louver, and Window Operators and Systems.
   2. UL 228 – Standard for Automatic Closing Devices. *NOTE: Variance from local authority having jurisdiction required to allow automatic door operators to remain powered during a fire event to maintain stair pressurization.*

B. American National Standards Institute (ANSI)/Builders' Hardware Manufacturers Association (BHMA):
   1. ANSI/BHMA A156.19: Standard for Power Assist and Low Energy Power Operated Doors.

C. American Society for Testing and Materials (ASTM):
   1. ASTM B221 - Standard Specification for Aluminum and Aluminum-Alloy Extruded Bars, Rods, Wire, Profiles, and Tubes.
   2. ASTM B209 - Standard Specification for Aluminum and Aluminum-Alloy Sheet and Plate

D. American Association of Automatic Door Manufacturers (AAADM):

E. National Fire Protection Association (NFPA):
   1. NFPA 101 – Life Safety Code.

2. NFPA 70 – National Electric Code.

F. International Conference of Building Officials (ICBO):
1. CBC: California Building Code (permit edition)

G. California Department of Forestry and Fire Protection, Office of the State Fire Marshall.

H. International Standards Organization (ISO):
1. ISO 9001 - Standard for Manufacturing Quality Management Systems

I. National Association of Architectural Metal Manufacturers (NAAMM):
1. Metal Finishes Manual for Architectural and Metal Products.

J. American Architectural Manufacturers Association (AAMA):
1. AAMA 607.1 - Clear Anodic Finishes for Architectural Aluminum.
2. AAMA 611 Voluntary Specification for Anodized Architectural Aluminum.

1.4 DEFINITIONS

A. Activation Device: Device that, when actuated, sends an electrical signal to the door operator to open the door.

1.5 PERFORMANCE REQUIREMENTS

A. Provide automatic door operators capable of withstanding structural loads and thermal movements based on testing manufacturer's standard units in assemblies similar to those indicated for this Project.

B. Operating Range: Minus 30 deg F (29 deg C) to 130 deg F (54 deg C).

C. Opening-Force Requirements for Egress Doors: In the event power failure to the operator, swinging automatic entrance doors shall open with a manual force, not to exceed 30 lbf (133 N) applied at 1” (25 mm) form the latch edge of the door.

D. Door Energy: The kinetic energy of a door in motion shall not exceed 1.25 lbs-ft (1.69 Nm).

E. Closing Time:
1. Doors shall be field adjusted to close from 90 degrees to 10 degrees in 3 seconds or longer.
2. Doors shall be field adjusted to close from 10 degrees to fully closed in not less than 1.5 seconds.

1.6 SUBMITTALS

A. Submit listed submittals in accordance with Conditions of the Contract and Division 01 submittal procedures.

B. Shop Drawings: Include plans, elevations, sections, details, hardware mounting heights, and attachments to other work. Indicate wiring for electrical supply.

C. Color Samples for selection of factory-applied color finishes.

D. Closeout Submittals: Provide the following with project close-out documents.
1. Owner’s Manual.
2. Warranties.

1.7 QUALITY ASSURANCE

A. Supplier and Installer Qualifications: Manufacturer's authorized representative who is trained for installation and maintenance of units required for this Project.

Authorized Dealers	
Brand	Dealer
Besam	Besam - Southern California Contact: Erik Huber ASSA ABLOY Entrance Systems 1520 S. Sinclair Street Anaheim, CA 92806 Phone: (714) 922-9925 Fax: (800) 285-8825
~~Horton~~	~~Capitol Door Service~~ ~~Contact: Doug Cutts~~ ~~8733 Monroe Court~~ ~~Rancho Cucamonga, CA 91730~~ ~~Phone: (909) 484-3401~~ ~~Fax: (909) 484-3650~~ ***ADD-2***

B. Manufacturer Qualifications: A qualified manufacturer with a manufacturing facility certified under ISO 9001 and with company certificate issued by AAADM.

C. Certifications: Automatic door operators shall be certified by the manufacturer to meet performance design criteria in accordance with the following standards:
1. ANSI A156.19.
2. NFPA 101.
3. UL 228 Listed (Fire Door Operator).
   a. Variance from local authority having jurisdiction required to allow automatic door operators to remain powered during a fire event to maintain stair pressurization.
4. UL 325 Listed.
5. ICBO (UBC Standard 10-1).
6. California State Fire Marshall (CSFM) Listed.

D. Source Limitations: Obtain automatic door operators through one source from a single manufacturer.

E. Product Options: Drawings indicate sizes, profiles, and dimensional requirements of automatic door assemblies and are based on the specific system indicated. Refer to Division 1 Section "Product Requirements."

F. Power Operated Door Standard: ANSI/BHMA A156.19.

G. Electrical Components, Devices, and Accessories: Listed and labeled as defined in NFPA 70, Article 100, by a testing agency acceptable to authorities having jurisdiction, and marked for intended use.

H. Emergency-Exit Door Requirements: Comply with requirements of authorities having jurisdiction for swinging automatic entrance doors serving as a required means of egress.

1.8 PROJECT CONDITIONS

A. Field Measurements: General Contractor shall verify openings to receive automatic door operators by field measurements before fabrication and indicate measurements on Shop Drawings.

B. Mounting Surfaces: General Contractor shall verify all surfaces to be plumb, straight and secure; substrates to be of proper dimension and material.

C. Other trades: General Contractor Advise of any inadequate conditions or equipment.

1.9 COORDINATION

A. Templates: Check Shop Drawings of other work to confirm that adequate provisions are made for locating and installing automatic door operators, safety sensors, activation switches, and control switches to comply with indicated requirements.

B. Electrical System Roughing-in: Coordinate layout and installation of automatic door operators with connections to, power supplies, and remote activation devices.

C. System Integration: Integrate automatic door operators with other systems as required for a complete working installation.
   1. Provide electrical interface control capability for card reader or keypad operation of automatic door operators on doors with electric locking.
   2. Where required for proper operation, provide a time delay relay to signal automatic door operator to activate only after electric lock system is released.

1.10 WARRANTY

A. Automatic door operators shall be free of defects in material and workmanship for a period of two (2) years from the date ~~of substantial completion.~~ indicated in the contract documents. ***ADD-2***

B. During the warranty period the Owner shall engage a factory-trained technician to perform service and ~~affect~~ effect repairs. A safety inspection shall be performed after each adjustment or repair and a completed inspection form shall be submitted to the Owner. ***ADD-2***

C. During the warranty period all warranty work, including but not limited to emergency service, shall be performed during normal working hours.

PART 2 - PRODUCTS

2.1 AUTOMATIC DOOR OPERATORS

A. Manufacturers: Besam SW200i / SW200ig or Horton 4100LE/4900LE / 4100-IG

Dr #	087100 HW #	Mounting Type	Activation Means	Safety Sensors	Remarks
100B	SH-1A.1	SURFACE-PUSH ARM	~~Pedastal~~Pedestal mounted WIKK Ingress'r @ exterior Wall mounted WIKK Ingress'r @ interior	***ADD-2*** Re-activation Sensor	Continuous width enclosure housing for automatic door operator Emergency power, CR
100A	SH-1A	SURFACE-PUSH ARM	Pedastal mounted WIKK Ingress'r @ exterior Wall mounted WIKK Ingress'r @ interior	Re-activation Sensor	Continuous width enclosure housing for automatic door operator Emergency power, CR
100-1A	SH-1	SURFACE-PUSH ARM	~~Pedastal~~Pedestal mounted WIKK Ingress'r @ exterior Wall mounted WIKK Ingress'r @ interior	***ADD-2*** Re-activation Sensor	Continuous width enclosure housing for automatic door operator Emergency power, CR
105A	SH-1A.1	SURFACE-PUSH ARM	~~Pedastal~~Pedestal mounted WIKK Ingress'r @ exterior, CR ~~Pedestral~~Pedestal mounted WIKK Ingress'r @ interior	***ADD-2*** Re-activation Sensor ***ADD-2***	Continuous width enclosure housing for automatic door operator Emergency power

2.2 MATERIALS

A. Aluminum: Alloy and temper recommended by manufacturer for type of use and finish indicated.
1. Headers: 6063-T6.
2. Extruded Bars, Rods, Profiles, and Tubes: ASTM B 221.
3. Sheet and Plate: ASTM B 209.

B. Sealants and Joint Fillers: Refer to Division 7 Section "Interior Joint Sealants".

2.3 COMPONENTS

A. Operator Enclosure for Surface-Mounted and Overhead Concealed Units: Enclosure shall not exceed 6" (152 mm) square in section and shall be fabricated from extruded aluminum with structurally integrated end caps, designed to conceal door operators and controls. The operator shall be sealed against dust, dirt, and corrosion within the enclosure. Access to the operator and electronic control box shall be provided by a full-length removable cover. Removable cover shall be secured to prevent unauthorized access.

B. Door Arms: A combination of door arms and linkage shall provide positive control of door through entire swing; units shall permit use of butt hung, center pivot, and offset pivot-hung doors. Provide units with arm assemblies to mount on non-public side of each opening, inside rooms, and inside stairs. Center-pivoted overhead concealed units shall include “power arm” that will serve as the direct drive top pivot.

C. Fasteners and Accessories: Manufacturer's standard corrosion-resistant, non-staining, non-bleeding fasteners and accessories compatible with adjacent materials.

D. Mounting Plates: Provide custom aluminum mounting plates by Tice Industries (Portland, OR) to secure operators to walls and fill any gaps behind the operator enclosure.

E. Signage: Provide signage in accordance with ANSI/BHMA A156.19.

F. Provide full-width enclosures in size as directed by Architect. Provide surface closer enclosures to match automatic door operator enclosures where so indicated in Section 087100 “Door Hardware”.

2.4 SWINGING DOOR OPERATORS

A. Provide door operators of size recommended by manufacturer for door size, weight, and movement; for condition of exposure; and for long-term, maintenance-free operation under normal traffic load for type of occupancy indicated.

B. Electromechanical Operators: Self-contained unit.
   1. Operator Type: Low energy; readily convertible to full energy; no tools required to change type.
   2. Mounting: Concealed-in-ground at glass doors, surface mounted at hollow metal doors.
   3. Features:
      a. Adjustable opening and closing speeds.
      b. Adjustable opening and closing force.
      c. Adjustable back-check.
      d. Adjustable hold-open time between 0 and 30 seconds.
      e. Reverse on obstruction.
      f. Variable rate open/closed speed control.
      g. Closed loop speed control with active braking and acceleration.
      h. Variable obstruction recycle time delay.
      i. Power close feature at stair discharge doors to ensure door closes and latches against stairwell air pressure.
      j. When operators are provided in pairs, adjustable features are independently adjustable for each operator. Provide for independent opening.

C. Quiet Performance: The operator shall be designed to output audible noise ratios less than or equal to 50dba.

D. Manual Use: The operator shall function as a manual door closer in the direction of swing with or without electrical power. The operator shall deliver an even, consistent open force across the entire transition from door fully closed to door fully open.

E. Electrical service to door operators shall be provided under Division 26 Electrical. Minimum service to be 120 VAC, 20 amps for doors with operators in pairs, 15 amps for single doors.

F. Locate in-ground operator control boxes outside of operator enclosure in protected access panel in location as directed by the Architect, with wire run no greater than 50 feet from operator.

2.5 ELECTRICAL CONTROLS

A. Safety Search Circuitry: Provide system to recycle the swinging panels when an obstruction is encountered during the closing cycle. If an obstruction is detected, the system shall search for that

object on the next closing cycle by reducing door closing speed prior to the previously encountered obstruction location, and will continue to close in check speed until doors are fully closed, at which time the doors will reset to normal speed. If obstruction is encountered again, the door will come to a full stop. The doors shall remain stopped until obstruction is removed and operate signal is given, resetting the door to normal operation.

B. Control Switch: Automatic door operators shall be equipped with a Camden CM-170/3 three position key switch to control the operation of the door. Control switch shall provide three modes of operation: On, Off, and Hold-Open. Provide key switch located on enclosure or frame jamb as directed by the Architect.

C. Safety Sensing at Doors with Knowing Switch Activation: Provide BEA SuperScan II at push side of each door equipped with an automatic door operator, both sides at doors with power close feature. Push side sensor to sense when a person is in the doorway and signal the automatic door operator to re-activate until the doorway is clear. Sensors on both sides cancel the power close feature (where occurs) when a person is detected approaching the door. Provide BEA BodyGuard (with BodyMount as required) at pull-side frame face.

D. Provide with Power-Close Feature. Operator to remain functional during a fire event.

2.6 ACTIVATION DEVICES

A. Push Plate Switches: Provide MS Sedco Stainless Steel 59-P, or equal with DPDT @ each side of opening at restroom doors except omit at sides where card reader serves as activation switch.

B. Activation for Low Energy Doors with knowing activation devices:

1. Vertical Actuation Bars: Provide customized Wikk Ingress'R x Satin Stainless Steel activation devices where noted on architectural floor plans, integrated into custom Wikk stainless steel bollards per Architect's design. Provide with double pole double throw (DPDT) switch at doors that also have card reader access so that switch use will simultaneously signal the operator and the security system (request-to-exit).

2.7 FINISHES

A. Provide operator enclosure and mounting plate in custom anodized finish to match door and frame finish.

B. Provide arm assembly in custom powdercoated finish to match door and frame assembly.

PART 3 - EXECUTION

3.1 INSPECTION

Examine conditions, with Installer present, for compliance with requirements for installation tolerances, header support, and other conditions affecting performance of swinging automatic entrance doors. Proceed with installation only after unsatisfactory conditions have been corrected.

3.2 INSTALLATION

A. Do not install damaged components. Fit joints to produce hairline joints free of burrs and distortion. Rigidly secure non-movement joints.

B. Mounting: Install automatic door operators/headers plumb and true in alignment with established lines and grades. Anchor securely in place.

1. Install surface-mounted hardware using concealed fasteners to greatest extent possible.

2. Set headers, arms and linkages level and true to location with anchorage for permanent support.

C. Door Operators: Connect door operators to electrical power distribution system as specified in Division 26 Sections.

D. Sealants: Comply with requirements specified in Division 7 Section "Joint Sealants" to provide weather tight installation.

3.3 FIELD QUALITY CONTROL

Testing Services: Factory Trained Installer shall test and inspect each swinging automatic entrance door to determine compliance of installed systems with applicable ANSI standards.

3.4 ADJUSTING

Adjust door operators, controls, and hardware for smooth and safe operation, for weather-tight closure, and complying with requirements in ANSI/BHMA A156.19 by AAADM Certified Technician.

3.5 CLEANING AND PROTECTION

Clean surfaces promptly after installation. Remove excess sealant compounds, dirt, and other substances. Repair damaged finish to match original finish.

END OF SECTION

SECTION 096816

CARPETING

Re-Issued, Addendum #2, 09/01/2017

PART 1 – GENERAL

1.01 RELATED SECTIONS

A. Division 0

B. Drawings

C. Specifications

D. Division 3 Concrete; not the work of this section.

E. Division 6 Wood and Plastics; not the work of this section.

F. Division 7 Thermal and Moisture Protection; not the work of this section.

G. Division 9 sections for floor finishes related to this section but not the work of this section.

1.02 SUBMITTALS

A. Shop Drawings showing the extent of product, seam direction and accessories shall be submitted to Architect for approval prior to installation. Check pattern match, if any, for matching during installation and possible waste factors in ordering required amounts. Should also indicate columns, doorways, enclosing walls or partitions, built-in cabinets, and locations where cutouts are required. Copy of approved shop drawings to be available on job site during installation.

B. Floor schedule using same room designations indicated on drawings.

C. Product Data: Provide data on specified products, describing physical and performance characteristics, sizes, patterns, colors available, and method of installation.

D. Verification Samples: Submit samples illustrating color and pattern for each carpet material specified.

E. Manufacturer's Installation Instructions: Indicate special procedures and perimeter conditions requiring special attention.

F. Maintenance Data: Include maintenance procedures, recommendations for maintenance materials and equipment, and suggested schedule for cleaning.

G. Manufacturer's Product Warranty.

H. Verification of reclamation and recycling program.

I. Certifications: Manufacturer to submit copies of the following independent laboratory reports showing compliance with requirements per these methods outlined in Part 2 of this document. Submitted results shall represent average results for production goods of the specified style.
   1. ASTM E-648 Flooring Radiant Panel
   2. ASTM E-662: Smoke Density
   3. AATCC 134: Electrostatic Propensity
   4. CRI TM-102: Fluorine Analysis
   5. ASTM D-3936: Delamination
   6. Other from methods specified in Part 2

1.03 QUALITY ASSURANCE AND REGULATORY REQUIREMENTS

A. Manufacturer Qualifications

1. Company specializing in manufacturing specified carpet with minimum 15 years documented experience.
2. Upon request, manufacturer to provide representative to assist in project start-up and to inspect installation while in process and upon completion. Representative will notify designated contact if any installation instructions are not followed.
3. Single Source Responsibility: Obtain each type of product from one source and by a single manufacturer.

B. Installer Qualifications

1. Flooring contractor shall be certified by the manufacturer prior to bid.
2. Flooring contractor to be a specialty contractor normally engaged in this type of work and shall have prior experience in the installation of these types of materials.
3. Certify payment of Prevailing Wage Rates to the installers.
4. Flooring contractor possessing Contract for the product installation shall not sub-contract the labor without written approval of the Project Manager.
5. Flooring contractor will be responsible for proper product installation, including floor testing and preparation as specified by the manufacturer and JOB CONDITIONS herein.
6. Flooring contractor to provide Owner a written installation warranty that guarantees the completed installation to be free from defects in materials and workmanship for a period of one year after job completion.

C. Performance Characteristics

1. Test reports for the following performance assurance testing to be submitted upon request. Submitted results shall represent average results for production goods of the referenced style.
1. Requirements listed below shall be met by all products.
    a) Flooring Radiant Panel: ASTM E-648 / NFPA 253: Class 1 (CRF: 0.45 watts/sq cm or greater)
    b) Federal Flammability: CPSC FF 1-70: Passes
    c) Smoke Density: ASTM E-662 / NFPA 258: < 450 Flaming Mode
    d) Electrostatic Propensity: AATCC 134 (Step & Scuff): 3.0 kV or less
    e) Static Coefficient of Friction: ASTM C-1028: Passes ADA Requirements for Accessible Routes (minimum 0.60)
    f) Delamination of Secondary Backing of Pile Floor Coverings: ASTM D-3936: No Delamination
    g) Lightfastness: AATCC 16E: > 4 @ 100 hours
    h) TARR: Severe Traffic: 3.5 minimum
    i) Moisture Barrier: Moisture Penetration by Impact @ 10 psi: No penetration of backing and seam after 10,000 impacts
    j) Air Flow Barrier: Air Permeability of Textile Fabrics: No Air Flow (0.0 cu. ft/min) through backing and seam
    k) Seam Integrity: Seam to remain intact after 50,000 cycles per Phillips Chair Test
    l) Other: As specified in this document

D. NSF 140 Certification

1. Product shall be certified at the Gold level to ANSI standard NSF 140, the Sustainable Carpet Assessment Standard (SCAS). Product certification shall be conducted by an independent, third party organization such as Scientific Certification Systems. Provide documentation.

1.04 RECYCLABILITY

A. Recycled Content

1. Product shall contain a minimum of 7% recycled content by weight. This percentage is calculated by dividing the weight of recycled content in one square yard of finished carpet by the total weight of one square yard of finished product and multiplying by 100. [(Recycle Content Weight) / (Total Product Weight) x 100].

2. Product shall contain 7% post-consumer recycled content by weight from recycled post consumer carpet. This ensures that carpet is diverted from landfills for the production of the product and that virgin resource use in the product is reduced.

3. Recycled content shall be certified by a neutral, independent, third party organization such as Scientific Certification Systems. Product shall carry product label certifying overall recycled content (including post-industrial and post-consumer content). Report percentage of post-industrial and post-consumer recycled content as a percentage of total product weight.

B. Product Recyclability

4. Manufacturer shall fully comply with the US Federal Trade Commissions' "Guides for the Use of Environmental Marketing Claims" (CFR Title 16 part 260) with respect to advertising, labeling, product inserts, catalogs and sales presentations of all its flooring products submitted and sold.

5. Product shall meet Federal Trade Commission's Guides for recyclability and shall be one hundred percent (100%) closed-loop recyclable back into flooring. A manufacturer cannot claim that a product or any portion of a product is recyclable if it is incinerated, even if incineration is used to produce heat and power (i.e. waste-to-energy) per FTC guides 16 CFR section 260.7 (d) example 3.

6. Recyclability of product installed shall be the same as that claimed by manufacturer and required by Project requirements.

C. Recycling Program

1. Manufacturer shall have a collection and recovery system for product and a fully established, currently operational recycling program at time of bid per FTC Guides Section 260.7 (d).

a) Manufacturer shall be able to reclaim and recycle 100% of installed carpet. Like material as installed shall be 100% recycled.

b) Manufacturer shall have written guarantee that 100% of the recovered vinyl backed carpet will be recycled and that no portion of the product will be land filled or incinerated (including waste-to-energy).

1.05 DELIVERY, STORAGE, & HANDLING

A. Deliver materials to the site in manufacturer's original packaging listing manufacturer's name, product name, identification number, and related information.

B. Store in a dry location, between 65 degrees F and 90 degrees F and a relative humidity below 65%. Protect from damage and soiling. Stack carpet rolls horizontally on a flat surface, stacked no higher than two rolls.

C. Make stored materials available for inspection by the Owner's representative.

D. Store materials in area of installation for minimum period of 48 hours prior to installation.

1.06 EXTRA MATERIALS

A. Provide additional 5% for "attic stock."

1.07 WARRANTY

A. Warranty to be sole source responsibility of the Manufacturer. Second source warranties and warranties that involve parties other than the carpet manufacturer are unacceptable.

B. If the product fails to perform as warranted when properly installed and maintained, the affected area will be repaired or replaced at the discretion of the Manufacturer.

C. Chair pads are not required, but are recommended for optimum textural performance. Absent the use of chair pads, more intensive maintenance will be required for areas in direct contact with chair caster traffic, and some degree of appearance change is to be expected.

D. Warranty shall not exclude carpet product installed on stairs provided it is properly installed and maintained.

E. The non-prorated Lifetime Limited warranty shall specifically warrant against:

1. Excessive Surface Wear: More than 15% loss of pile fiber weight
2. Excessive Static Electricity: More than 3.0 kV per AATCC 134
3. Resiliency Loss of the Backing: More than 10% loss of backing resiliency
4. Delamination
5. Edge Ravel
6. Zippering

F. Tuft Bind warranty in lieu of edge ravel and zippering is not acceptable.

1.08 SUBSTITUTES / ALTERNATES

A. Subject to compliance with all requirements, "or equal" shall match the selected color(s) and have similar aesthetic appearance and recyclability.

B. Substitution sample and submittals shall be submitted in accordance with the Contract Documents.

C. Sample of proposed substitute shall be inclusive of both the face and proposed cushion (color-only sample not acceptable).

PART 2 – PRODUCTS

2.01 HYBRID RESILIENT SHEET FLOORING MATERIALS (CARPET)

A. Product/Manufacturer: Tandus Centiva District Powerbond® Cushion Style sheet flooring or District approved equal.

B. (CPT) Carpet styles, patterns and colors: Refer to Material Identification Codes.

C. Construction: Stratatec® Patterned Loop

D. Gauge: 5/64

E. Stitch Rate: 12.0 / inch

F. Tuft Density: 153.6 tufts/sq inch

G. Pile Height Average: .187 inch

H. Pile Thickness: .098 inch

I. Density Factor (UM44D): 7,714 oz/cu yd

J. Fiber System: Antron Lumena BCF Nylon with Static Control & Ensure

K. Dye Method: Solution Dyed

L. R-Value: 0.84 Hr-ft2-^{o}F/Btu

M. Static Coefficient of Friction: ASTM C-1028; Passes ADA requirements.

N. Static Propensity: AATCC 134: 3.0 kv or less

O. Flooring Radiant Panel: ASTM E-648 or NFPA 253: Class 1

P. Acoustic Requirements: Noise Reduction Coefficient (NRC): 0.22 Minimum

Q. Seam Integrity: No seam separation after 50,000 cycles per Phillips Chair Test

R. Cushion Compression Force Deflection: Minimum 7 lbs/sq. inch @ 25%; Maximum 25 lbs/sq. inch at 25%

S. Total Weight: 82.0 oz/sq yd +/- 5%

T. Environmental Impact: No pesticides added to product (US EPA Registered Antimicrobials)

U. Fiber

1. Nylon Fiber: Bulked Continuous Filament (BCF) Nylon in a loop pile construction: Antron Lumena®
2. For yarn containing recycled content, report post consumer and post industrial recycled content of the pile face yarn per total yarn weight i.e. [(Recycle Content in Pile Face Yarn) / (Total Weight of Pile Face Yarn) x 100]
3. Fiber to contain carbon-core filament for permanent static control. Topical treatments are not acceptable.
4. Durable stain inhibitor should be applied to the fiber during product manufacturing to resist fiber staining and soiling.: Minimum 200 ppm (CRI TM-102)

V. Cushion Characteristics

1. Primary Backing: Synthetic Non-Woven.
2. Secondary Backing: Powerbond Closed Cell Cushion
   a) Product Size: 6-Foot Width Roll Goods
   b) Cushion Type: Closed Cell Cushion
   c) Cushion Thickness: .156 inch thick
   d) Cushion Density (ASTM D-1667): Min. 18.5 lbs/cu ft
   e) Compression Set (ASTM D-1667): Maximum 10%
   f) Compression Force Deflection (ASTM D-1667): Minimum 7 lbs/sq. inch @ 25%; Maximum 25 lbs/sq. inch at 25%
   g) Moisture Barrier: Impermeable to moisture and airflow. Moisture Penetration by Impact @ 10 psi: No penetration of backing after 10,000 impacts. Provide independent test results. The British Spill Test is NOT an acceptable measurement for moisture barrier.
   h) Seam Method: Chemical weld; molecularly bound seams to be impermeable to moisture and airflow
   i) Seam Integrity: Moisture Penetration by Impact at SEAMS @ 10 psi; No penetration after 10,000 impacts. Provide independent test results. The British Spill Test is NOT an acceptable measurement for moisture barrier.
   j) Seam Integrity: Phillips Chairs Test: No seam separation after 50,000 cycles; Provide independent test results
   k) Face yarn fully fused to secondary backing system that will not delaminate
   l) Delamination: No delamination per ASTM D3936
   m) Product shall not contain pesticides (US EPA Registered Antimicrobials). Installation adhesives are exempt from this section.

2.02 PERMANENT ENTRY FLOORING (WALK-OFF MATTS)

A. Product/Manufacturer: Tandus Centiva Geo Tile or District approved equal

1. Size: 18” x 18” tile
2. Fiber type: 100% solutions dyed
3. Yarn type: 100% Premium Polypropylene

4. Construction: Molded Reinforced Needlepunch Textile

5. Pile heights average: 0.250 inch (ASTM D-418, Sec. 12)

6. Texture/Pattern: Rubber Reinforced Geometric Pattern

7. Surface Flammability: Passes CPSC FF 1-70

8. Flooring Radiant Panel: Class 2 (mean ave. CRF: 0.22 w/sq cm to 0.44 w/sq cm (ASTM E-648)

B. Color: 00154 Charcoal (available locally), currently available from Tandus Centiva.

2.03 ACCESSORIES

A. Materials recommended by Manufacturer for patching, priming, seam welding, etc.

B. Flooring Adhesives: Adhesive recommended and approved by flooring manufacturer, zero VOC, tested by the adhesive manufacturer for use with the specified flooring product; Submit approval documentation by both flooring manufacturer and adhesive manufacturer as compatible with substrate, flooring, project conditions, use, expected traffic, equipment loads and surface conditions including alkalinity, moisture emission levels, slab relative humidity, and other factors that may affect flooring and adhesive performance.

C. Adhesive and Sealant VOC Limits: According to South Coast Air Quality Management District Rule 1168 and GS-36 for aerosols. VOC Limits: As tested using U.S. EPA Reference Test Method 24 and as defined by South Coast Air Quality Management District Rules: SCAQMD Rule 1168, Adhesive and Sealant Applications.

D. Resilient Stair Nosing: Ribbed rubber square nose, 3/16 inch with 1-1/4 inch vertical face and 1-1/2 inch horizontal face, by Roppe or similar as selected by Architect.

E. (TRS) Transition Edge Strips: Provide metal edge strips of width shown on the drawings and of required thickness to protect exposed edges of the flooring. Provide units of maximum available length to minimize the number of joints. Use butt-type metal edge strips for concealed anchorage, or overlap-type metal edge strips for exposed anchorage. Unless otherwise shown, provide strips made of extruded aluminum with a mill finish.

F. Base and Carpet Edge: As specified in applicable sections.

PART 3 – EXECUTION

3.01 EXAMINATION / PREPARATION

A. Prepare sub-floor to comply with criteria established in Manufacturer's installation instructions. Use only preparation materials that are acceptable to the Manufacturer.

1. Remove all deleterious substances from substrate(s) that would interfere with or be harmful to the installation (i.e. floor wax).

2. Remove sub-floor ridges and bumps. Fill cracks, joints, holes, and other defects.

B. Verify that sub-floor is smooth and flat within specified tolerances and ready to receive carpet.

G. Verify that substrate surface is dust-free and free of substances that would impair bonding of product to the floor.

H. Verify that concrete surfaces are ready for installation by conducting moisture and pH testing. Results shall be within limits recommended by Manufacturer.

1. Powerbond Cushion installations utilizing #54 Seam Weld or C-XL Water Based Seam Sealer do not require moisture vapor emission rate (MVER) testing nor relative humidity (RH) testing provided that no free liquids are present and that no moisture stained concrete is evident. pH testing is required for all Powerbond Cushion installations as detailed below. In the event that free liquids and/or moisture stained concrete are observed, a full assessment of the concrete substrate is required. This assessment includes MVER testing per ASTM F-1869-04 (Standard Test Method for

Measuring Moisture Emission Rate of Concrete) and In-Situ RH testing per ASTM F-2170-02 (Standard Test Method for Measuring Relative Humidity in Concrete). For assistance with installations that require MVER and RH testing, please contact Tandus Centiva's Installation Services at 800-241-4902, ext. 2625, 2623, 2129, 2023 or 2670. In cases where such testing is mandated, Tandus Centiva requires that at least 1 MVER and 2 RH tests be performed on the initial 1000 sq ft of each project. In addition, a minimum of one test, alternating between MVER and RH, per 1000 sq ft is required for the balance of the project. The required pH range is 9.0 or less as tested according to ASTM F-710-05. Preparing the surface of a concrete slab for pH testing requires the following attention to detail. Make sure the concrete surface is adequately cleaned of any adhesives, primers, curing compounds, surface contaminants, etc. Exercise care not to over clean the surface of the concrete removing the thin layer of carbonation. This can result in higher, non-responsive pH readings. Slightly wet the concrete sub floor surface with a small amount of distilled water and allow the water to stand for one minute. Apply pH test paper to the wet concrete surface and allow the pH test paper to remain in contact with the wet area for one minute. The pH test paper will change color depending on the pH of the wetted surface and a color scale is provided with the pH test papers for comparison. Note: pH test paper commonly supplied in MVER test kits only measures up to a pH of 12 accurately. Please see Powerbond Cushion Installation & Floor Preparation Instructions for specific requirements for moisture vapor emission rate, ambient conditions, and other requirements.

I. All material used in sub-floor preparation and repair shall be recommended by the carpet manufacturer and shall be chemically and physically compatible with the carpet system being bid.

J. Maintain minimum 65 degrees F ambient temperature and 65% Relative Humidity for 72 hours prior to, during, and 48 hours after installation.

K. Do not install flooring until space is enclosed and weatherproof, wet-work in space is completed and nominally dry, work above ceilings is complete, and ambient temperature and humidity conditions are and will be continuously maintained at values near those indicated for final occupancy.

L. There will be no exceptions to the provisions stated in the Manufacturer's installation instructions.

3.02 INSTALLATION - GENERAL

A. Install product in accordance with Manufacturer's installation instructions. Product shall have low VOC, factory applied, "dry" adhesive. A peel & stick method applied to the back at the time of manufacture is preferred. Product shall meet the requirements of CRI's Green Label Plus (GLP) program for carpet. Provide documentation.

B. Adhesive shall meet the requirements of CRI's Green Label Plus program for adhesive. Provide documentation.

C. Adhesives shall be below the VOC content limits specified by the South Coast Air Quality Management District Rule #1168. Provide documentation.

D. No US EPA registered pesticides (antimicrobials) are to be added to the product. Antimicrobial treatments are registered with the EPA as preservatives of the products only, and no health benefit should be claimed or expected. If antimicrobials are added, then third party documentation with a seal is required stating that the pesticides used will cause NO HARM to the occupants. Installation adhesives are exempt from this section.

E. Product as installed to be securely attached to the floor in compliance with Americans with Disabilities Act (ADA), Section 4.5.3.

F. Verify product match before cutting to ensure minimal variation between dye lots.

G. Layout product and locate seams in accordance with shop drawings.

1. Locate seams in area of least traffic, out of areas of pivoting traffic, and parallel to main traffic. Minimize cross seams.

2. Do not locate seams perpendicular through door openings.

3. Align run of pile in same direction as anticipated traffic and in same direction on adjacent pieces.

4. Locate change of color or pattern between rooms under door centerline.

5. Provide monolithic color, pattern, and texture match within any one area.

H. Install product tight and flat on sub-floor, well-fastened at edges, with a uniform appearance.

I. Double-cut product seams with accurate pattern match. Make cuts straight, true, and unfrayed.

J. Seal seams with manufacturer's recommended seam sealer as stated in installation instructions. Make sure the seam is fully sealed.

K. Roll with appropriate roller for complete contact of product with adhesive to sub-floor.

L. Trim carpet neatly at walls and around interruptions.

M. Completed product is to be smooth and free of bubbles, puckers, and other defects.

N. To ensure asbestos enclosure, the carpet material should be sealed around the perimeter of the installation using a one-inch strip of contact adhesive spread directly underneath the outer edge of the product.

3.03 INSTALLATION OF PERMANENT ENTRY FLOORING

A. Installation Method – Carpet

1. The Geotile material shall be cut net/net to carpet material and a permanent reducer shall be used at the threshold point.

B. Installation Method – Hard Surface

1. The Geotile material shall be cut with the leading edge adhered to sub-flooring with a waterproof adhesive.

2. Permanent reducer shall be used at leading edge of Geotile in compliance with ADA Guidelines.

3. Permanent reducer shall be installed at threshold point.

3.03 PROTECTION & CLEANING

A. Remove excess adhesive and/or seam sealer from floor and wall surfaces without damage.

B. All rubbish, wrappings, debris, trimmings, etc. to be removed from site and recycled or disposed of properly.

C. Clean and vacuum surfaces using a beater brush/bar commercial vacuum.

D. After each area of is installed, protect from soiling and damage by other trades.

END OF SECTION

SECTION 102813
TOILET ACCESSORIES

Revised, Addendum #2, 09/01/2017

PART 1 GENERAL

1.1 SUMMARY

A. Section Includes:

1. Toilet and bath accessories.
2. Building accessories
3. Warm-air dryers.

B. Related Sections:

1. Section 092900 - Gypsum Board: Metal anchor reinforcement in walls.
2. Section 093000 - Tiling: Ceramic tile bath and shower accessories.

1.2 SUBMITTALS

A. Submit in accordance with Section 013300

B. Product Data: Illustrate each accessory at large scale and show installation method.

C. Samples: Submit finish samples.

D. Schedule indicating types, quantities, sizes, and installation locations (by room) for each toilet accessory item to be provided for project.

E. Setting drawings where cutouts are required in other work, including templates, substrate preparation instructions, and directions for preparing cutouts and installing anchorage devices.

F. Maintenance instructions, including replaceable parts and service recommendations.

1.3 QUALITY ASSURANCE

A. Product Options: Accessory requirements, including those for materials, finishes, dimensions, capacities, and performance, are established by specific products indicated in the Toilet and Bath Accessory Schedule.

1. Products of other manufacturers listed in Part 2 with equal characteristics, as judged solely by Architect, may be provided.
2. Do not modify aesthetic effects, as judged solely by Architect, except with Architect's approval. Where modifications are proposed, submit comprehensive explanatory data to Architect for review.

1.4 DELIVERY, STORAGE AND HANDLING

A. Do not deliver accessories to site until rooms in which they are to be installed are ready to receive them.

B. Pack accessories individually in manner to protect accessory and its finish.

1.5 PROTECTION

A. Protect adjacent or adjoining finished surfaces and work from damage during installation of work of this section.

1.6 COORDINATION

A. Coordinate accessory locations with other work to prevent interference with clearances required for access by disabled persons, proper installation, adjustment, operation, cleaning, and servicing of accessories.

1.7 WARRANTY

A. General Warranty: Special warranty specified in this Article shall not deprive Owner of other rights Owner may have under other provisions of the Contract Documents and shall be in addition to, and run concurrent with, other warranties made by Contractor under requirements of the Contract Documents.

B. Manufacturer's Mirror Warranty: Written warranty, executed by mirror manufacturer agreeing to replace mirrors that develop visible silver spoilage defects within minimum warranty period indicated.

1. Minimum Warranty Period: 15 years.

PART 2 PRODUCTS

2.1 MANUFACTURERS

A. Manufacturers: Subject to compliance with requirements, provide accessories by one of the following:

B. Washroom Equipment

1. Bobrick Washroom Equipment Inc. (Basis of Design)
2. American Specialties Inc.
3. Bradley Corporation
4. GAMCO
5. Or District approved equal.

C. Warm-Air Dryers:

1. Bobrick Washroom Equipment, Inc. (Basis of Design)
2. Excel Dryer Corporation.
3. World Dryer.
4. Or District approved equal.

D. Available Products: Subject to compliance with requirements, products that may be incorporated into the Work include, but are not limited to, those indicated in the Toilet and Bath Accessory Schedule at the end of Part 3.

2.2 MATERIALS

A. Stainless Steel: ASTM A 666, Type 304, with No. 4 finish (satin), in 0.0312-inch minimum nominal thickness, unless otherwise indicated. Adhesive: Epoxy type contact cement.

B. Sheet Steel: ASTM A 366/A 366M, cold rolled, commercial quality, 0.0359-inch minimum nominal thickness; surface preparation and metal pretreatment as required for applied finish.

C. Galvanized Steel Sheet: ASTM A 653/A 653M, G60.

D. Mirror Glass: ASTM C 1036, Type I, Class 1, Quality q2, nominal 6.0 mm thick, with silvering, electroplated copper coating, and protective organic coating complying with FS DD-M-411.

E. Galvanized Steel Mounting Devices: ASTM A 153/A 153M, hot-dip galvanized after fabrication

F. Fasteners, Screws, and Bolts: Hot dip galvanized. Expansion Shields: Fiber, lead or rubber as recommended by accessory manufacturer for component and substrate. Provide exposed fasteners with finish to match accessories.

2.3 FINISHES

A. Shop Primed Ferrous Metals: Pretreat and clean, spray apply one coat primer and bake.

B. Chrome/Nickel Plating: Satin finish.

C. Stainless Steel: No. 4 satin finish.

D. Baked-Enamel Finish: Factory-applied, gloss-white, baked-acrylic-enamel coating.

2.4 FABRICATION

A. General: Names or labels are not permitted on exposed faces of accessories. On interior surface not exposed to view or on back surface of each accessory, provide printed, waterproof label or stamped nameplate indicating manufacturer's name and product model number.

B. Surface-Mounted Toilet Accessories: Unless otherwise indicated, fabricate units with tight seams and joints, and exposed edges rolled. Hang doors and access panels with continuous stainless-steel hinge. Provide concealed anchorage where possible.

C. Recessed Toilet Accessories: Unless otherwise indicated, fabricate units of all-welded construction, without mitered corners. Hang doors and access panels with full-length, stainless-steel hinge. Provide anchorage that is fully concealed when unit is closed.

D. Framed Glass-Mirror Units: Fabricate frames for glass-mirror units to accommodate glass edge protection material. Provide mirror backing and support system that permits rigid, tamper-resistant glass installation and prevents moisture accumulation.

E. Provide galvanized steel backing sheet, not less than 0.034 inch and full mirror size, with non-absorptive filler material. Corrugated cardboard is not an acceptable filler material.

F. Mirror-Unit Hangers: Provide mirror-unit mounting system that permits rigid, tamper- and theft-resistant installation, as follows:

1. One-piece, galvanized steel, wall-hanger device with spring-action locking mechanism to hold mirror unit in position with no exposed screws or bolts.

G. Keys: Provide universal keys for internal access to accessories for servicing and resupplying. Provide minimum of six keys to Owner's representative.

PART 3 EXECUTION

3.1 PREPARATION

A. Deliver inserts and rough-in frames to jobsite at appropriate time for building-in. Provide templates and rough-in measurements as required.

B. Before starting work notify Architect in writing of conflicts detrimental to installation or operation of units.

C. Verify exact location of accessories with Architect. Verify blocking is in place prior to gypsum board installation.

D. Accessory Locations: Coordinate accessory locations with other work to avoid interference and to assure proper operation and servicing of accessory units.

3.2 INSTALLATION

A. Install fixtures, accessories and items in accordance with manufacturer's printed instructions.

B. Install true, plumb and level, securely and rigidly anchored to substrate and sealed to protect structural elements of wall from moisture.

C. Use tamper proof (security) type fasteners.

3.3 ADJUSTING AND CLEANING

A. Adjust toilet accessories for proper operation and verify that mechanisms function smoothly. Replace damaged or defective items.

B. Clean and polish exposed surfaces in accordance with manufacturer's recommendations after removing labels and protective coatings.

3.4 TOILET AND BATH ACCESSORY SCHEDULE

A. Building Accessories:
   1. (BA-2) Mop and Broom Holder with Shelf: Bobrick B-239 X 34 with shelf, 4 hooks and 3 mop/broom holders 34 inches long, or District approved equal.

B. Coat Hooks:
   1. (CH-1) Robe Hooks: Bobrick B-76717, satin finish, 1-5/8 inch projection, single hook, or District approved equal.
   2. (CH-2) Robe Hooks: Bobrick B-76727, satin finish, 1-7/8 inch projection, double hook, or District approved equal.

C. Grab Bars:
   1. (GB) Grab Bars: Bobrick Series 6806, 1-1/2 inch diameter with concealed mounting, with 1/8 inch thick stainless steel plate.
      a. Sizes and configurations as indicated.
      b. Use Bobrick Series 6806.99, for grab bars in showers or steam rooms.
      c. Or District approved equal.

D. Hand (Hair) Dryers – Electric:
   1. (HD-1) Electric Hand Dryers: Bobrick B-3725, recessed with 2" projection from wall, electric with automatic operation, stainless steel, 1000 watts, or District approved equal.

E. Mirrors:
   1. (MIR-1) Framed Mirrors: Bobrick B-290 Series, sizes as indicated, with Johnson Defender Film applied, or District approved equal.

F. Paper Towel Cabinets:
   1. (PTC-1) Combined Paper Towel Dispenser and Waste Receptacle: Bobrick B-3974, recessed compact unit, 12 gallon capacity, automatic, or District approved equal.
   2. (PTC-2) Paper Towel Dispensers: Bobrick B-29744, semi-recessed, automatic, roll paper towel dispenser, or District approved equal.

G. Soap Dispensers:
   1. (SDISP-1) Automatic Soap Dispensers: Bobrick B-2013, foam soap dispenser with "AA" batteries, sensor activated, surface mounted, or District approved equal.

H. Sanitary Napkin Cabinets:
   1. (SNC-1) Sanitary Napkin/Tampon Dispensers: Bobrick 37063, 25 cent operation, recessed mounted.

I. Sanitary Napkin Disposal Units:
   1. (SND-1) Sanitary Napkin Disposal Units: Bobrick <u>B-279</u> ~~254~~, surface mounted. ***ADD-2***

J. Toilet Paper Holders:
   1. (TPH-4) Toilet Paper Holders: Bobrick B-2892, twin jumbo-roll toilet tissue dispenser, surface mounted. Or District approved equal.

K. Toilet Seat Covers:
   1. (TSC-2) Toilet Seat Covers: Bobrick 221, surface mounted, or District approved equal.

L. Utility Shelves:
   1. (US-3) Stainless Steel Shelf with Mop/Broom Holders and Rag Hooks: Bobrick B-239, 8 inch deep, surface mounted, or District approved equal.

M. Waste Receptacles:
   1. (WRC-1) Waste Receptacles: Bobrick B-2280, free standing, 13 gal open top, or District approved equal.
   2. (WRC-3) Waste Receptacles: Bobrick B-279, waste receptacle, surface mounted, or District approved equal.

END OF SECTION

SECTION 105626.13
MANUAL MOBILE STORAGE SHELVING

Revised, Addendum #2, 09/01/2017

PART 1 GENERAL

1.1 SUMMARY

A. Section Includes:

1. Pre-engineered, prefinished high density mobile storage system, consisting of moveable and stationary units, complete with tracks, full raised floor, ramp, operation handles, end panels and shelving system, with supports, standards, and accessories.
2. Bolt setting grout.
3. Manufacturer's 2 year warranty.

1.2 QUALITY ASSURANCE

A. Approved Installer: Installation of storage systems and accessories shall be by manufacturer's approved installer specializing in storage system installation with not less than 3 years of experience in installation of systems similar to that required for this project.

B. Manufacturer's Qualifications: Firm (material producer) with not less than 3 years of production experience, whose published literature clearly indicates general compliance of products with requirements of this section.

1.3 DESIGN

A. Design: Performed in accordance with applicable codes and standards to safely support design loads without excessive deflections or stress.

B. Design Calculations: Performed and certified by Professional Structural Engineer registered in the State where project is located, experienced in steel design. These certified calculations shall be submitted to the Architect upon request. Calculations shall include storage system members and connections, and connections made from storage system to main structure.

C. Design Loads: Design of storage systems shall consider following loading parameters as well as applicable code loads:

1. Uniform live load of 125 psf.
2. Storage system dead loads. Loaded weight of Cine System: 11,936#.
3. Concentrated live load of 1500#, placed on space 2-1/2 feet square, wherever this load placed upon otherwise unloaded floor would produce stresses greater than those caused by design uniform loads.

D. Deflections: Deflection design limits of storage system shall be as follows:

1. Maximum shelving deflection under full loads shall not exceed 1/4 inch.
2. Maximum floor system component deflection shall not exceed 1/240 of component span.
3. Building Movement: Provide for one inch movement of foundation wall after installation of storage system.
4. Obstructions: Design of supporting structure in the main and secondary aisles shall be such that any obstructions are minimal and do not inhibit pedestrian or cart traffic.

1.4 SUBMITTALS

A. Shop Drawings: Submit fabrication and installation drawings in accordance with Section 013300. Shop drawings shall be certified by Professional Engineer Registered in State where project is located, experienced in steel design.

1. State storage system component manufacturer's name, sizes, types, quantities, locations, painting and accessories included.

B. Show connections required and include details and instructions as necessary for complete assembly and installation of storage system including assembly attachments to structure.

C. Samples: Submit samples for color and finish selection. Submit samples of laminate face panels for color selection and appearance acceptance.

1.5 DELIVERY, STORAGE AND HANDLING

A. Package, deliver, handle, store, install and erect at job site to avoid damage.

B. Deliver in timely manner for installation in proper sequence with work of other trades.

PART 2 PRODUCTS

2.1 MANUFACTURERS

A. Type and Manufacturer: Quik-Lok™ four-post shelving manufactured by Aurora Storage Products, Inc.

B. Other Acceptable Manufacturers: Spacesaver Corporation, Magic Aisle #810 by Acme Visible Records, TAB Storage Systems Modular Mobile, or District approved equal.

2.2 MATERIALS

A. Sheet Steel: ASTM A446; stretcher leveled, prime grade furniture steel; 1.25 oz/sq ft galvanized coating (A366; stretcher or roller levelled prime grade furniture steel; E finish).

B. Steel Shapes: ASTM A36; galvanized.

C. Steel Rails: Minimum 1035 case hardened steel, one-piece.

D. Grout: Hydraulic type polymer cement.

E. Plywood: 3/4 inch, 5 ply, B-D exterior grade.

F. Plastic Laminate; NEMA LD3; 0.050 inch thick by Wilsonart; color as selected.

1. Laminate Backing Sheet: NEMA LD3; BK20 backing grade, undecorated plastic laminate.

2.3 GENERAL DESIGN

A. Storage System Requirements: Maximum overall height of system shall be 90 inches. Construct stationary units of same materials as moveable units so that shelving heights are consistent throughout system. Overhead raceway assemblies, anti-tips and other components mounted on top of shelving shall not project beyond 90 inch ceiling height.

B. Cine System shall cover overall area as indicated on drawings.

C. Manual operation shall provide for efficient movement of one or more ranges. Physical effort to start unit moving (each fully loaded 1600 lbs) moveable carriage shall not exceed 5 pounds.

D. System alignment: 1/2 inches maximum variation, measured between edges of end panels within each range in aisle positions.

E. Components shall exhibit no abnormal friction, abrasion, binding, or wear on or between contact surfaces and drifting or rolling of stopped carriages will not be acceptable.

2.4 FABRICATION

A. Rails: One-piece steel rail, 2-1/2 inches wide, 1-1/8 inches high, formed into tee section with wide base flange for lateral support and ability to anchor rails to subfloor.

B. Provide tongue and groove interlocking design rail connection joints to provide horizontal and vertical continuity between rail sections and to gradually transfer concentrated wheel point load to and from adjoining rail sections. Do not butt splice rail joints.

C. Level and grout rails locate and position properly, work grout under rail completely filling voids and trim up sides flush with rails.

1. Rail Levelness: 3/32 inch maximum variation from true level within module; 1/16 inch maximum variation between adjacent rails, perpendicular to rail direction; 1/32 inch maximum variation in 10 feet of rail length, along rail in system.

D. Recheck rails for integrity of position and levelness and anchor into original concrete using minimum one inch rawl plugs and 2 inch by #10 screws not to exceed 4 foot on center.

E. Grout: Hydraulic type polymer cement compound which, when mixed with water, will harden rapidly to produce permanent bolt setting anchor.
   1. Compound: Based on performance of test specimens at room temperature and in laboratory air. to following:
      a. Linear Movement: Exhibit slight expansion of not more than 0.002 inch per lineal inch on setting, it shall not shrink.
      b. Compression Strength: ASTM Standards tested on Balding-South-ward machine of 60,000 lbs. capacity - 2 inch cubes shall have following average compression strengths:
      c. Age: One hour -- 4,500 psi 28 hours -- 5,000 psi 7 days -- 8,000 psi.
   2. Content: Compound shall contain no Portland cement, ferrous metals or rust promoting agents.

F. Raised Floor and Ramp: Incorporate manufactured raised floor system between adjacent rails and at back of system at bays of moveable system. Finished elevation of raised floor: Flush with top of rails.

G. Provide continuous ramp at front of system not to extend past front of the carriages and having maximum slope of 9 degrees. Vertical transition from ramp edge to base floor shall be maximum of 1/8 inch.
   1. Construct raised floor panels of minimum 3/4 inch thick plywood as specified. Raised floor and ramp assembly shall support 400 pound concentrated load with maximum deflection of 3/8 inch, or as required to support fully loaded system.

H. Install leveling screws at raised floor and ramp on maximum 16 inch centers to level and support the floor. Anchor floor panels and ramp to base floor to prevent movement.

2.5 CARRIAGES

A. Unit welded construction capable of supporting minimum load of 1, 000 pounds per carriage foot without distortion.Carriage splices, where necessary, shall be tongue and groove tension bolted design to maintain proper alignment.

B. Construct carriage to provide 5/8 inch high shelf retaining flange on top of carriage full length of range to keep shelf storage units centered and aligned. Secure shelving unit upright to carriage frame with vibration proof fasteners of no less than size #12.

C. Load Wheels: Constructed of solid, case hardened steel, minimum 2-3/4 inches in diameter, precision ground and balanced.
   1. Bearings: Permanently sealed, lubricated and self-aligning of ball or roller design.

D. Provide minimum one inch neoprene bumpers between aisles for safety finger space and positive stop for moveable carriages.

E. Finish exposed carriage faces in smooth appearance without exposed holes or protruding bolts.

F. Provide in-rail (carriage mounted) or overhead (top shelf mounted) anti tip assembly per moveable carriage. Anchor entire system to stationary platforms and wall.

G. Finish paint carriages same color as shelving as selected by Architect.

2.6 FACE PANELS

A. Exposed Ends: High pressure plastic laminate, provide backer sheets as specified to prevent panel warping. Panel edges of plastic T-mold edging. Color or pattern as selected by Architect.

2.7 SHELVING EQUIPMENT

A. Design: 4-post, wedge locking design consisting of 3 basic parts, uprights, shelves, and shelf supports, assembled without nuts, bolts, studs, sway braces, gussets or clips. Punch shelves to accept center stops.

1. Front and back flange of shelf shall be flush with outside face of post. Shelves shall be adjustable on 1-1/2 inch vertical centers.

B. Top and bottom closure shelves shall be solid sheet metal. Provide intermediate storage shelves of ~~wire~~ solid sheet metal design capable of supporting cine film cans (50 pound capacity per shelf) or shelves appropriate for pharmaceutical materials where indicated. ***ADD-2***

C. 6 foot range lengths consist of two 36 inch wide shelving sections. 8 foot range lengths consist of two 30 inch wide and one 36 inch wide shelving sections.

D. Vertical shelf openings minimum 6 inches on center for 12 inch deep shelving and 9 inch on center for 8 inch deep shelving. 12 inch deep shelving sections shall be 12 usable ~~wire~~ solid sheet metal shelves high plus solid canopy top dust covers and bottom shelves. 8 inch deep shelving sections shall be 8 usable ~~wire~~ solid sheet metal shelves high plus solid canopy top dust covers and solid bottom shelves. ***ADD-2***

E. Shelving components shall exhibit no dents, oil-canning, buckling, or other surface irregularities.

1. Steel gauges:
   a. Upright frames: 18 gauge.
   b. Shelf supports 36 inch (file): 14 gauge.
   c. Top and bottom shelves: 22 gauge.

F. Shelving finish abrasion resistance: ASTM D968, 25 liters per mil.

G. Shelving Components: Provide components free of burrs, sharp edges, projecting hardware and other defects which could present hazards to materials or personnel.

2.8 FINISH

A. Factory Finish: Solid ~~and wire~~ shelves and shelving system shall be finished with electrostatically applied powder coating system using epoxy-polyester hybrid powder paint in color as selected by Architect from manufacturer's standard colors. Apply to 1-1/2 mil thickness. ***ADD-2***

PART 3 EXECUTION

3.1 INSTALLATION

A. Install storage system in accordance with reviewed shop drawings and manufacturer's instructions.

B. Coordinate with other trades involved where required for installation.

C. Install storage shelving system and accessories plumb and true, and securely anchor in-place.

END OF SECTION

SECTION 115310
LABORATORY CASEWORK AND OTHER FURNISHINGS

Revised, Addendum #2, 09/01/2017

PART 1 GENERAL

1.1 SECTION INCLUDES

A. Wood Laboratory Casework and Tables

B. Metal Laboratory Casework and Tables

C. Cabinet Hardware

D. Zoology and Ornithology Specimen Cabinets

E. Map Storage File

F. Laboratory Work Surfaces

G. Downdraft Dissection Table with Hinged Cover

H. Shelving Assemblies

I. Cylinder Restraint Assembly

J. Overhead Service Carriers

K. Overhead Support Grid (Overhead Unistrut)

L. Pipe Drop Enclosure

M. Drying Rack

N. Accessories

O. Finish for Miscellaneous Wood Items

P. Metal Fabrications

Q. Stainless Steel Fabrications
   1. Work Surfaces
   2. Laboratory Sinks
   3. Scullery Sinks
   4. Canopy Hoods

R. Slotted Channel Framing (Strut)

S. Sealant

1.2 RELATED SECTIONS

A. Division 09 – Flooring (wall base)

B. Section 115313 – Fume Hoods and Other Air Containment Units

C. Section 115343 – Laboratory Service Fittings and Fixtures

D. Division 22 – Plumbing

E. Division 23 – Heating, Ventilated, and Air-Conditioning

F. Division 26 – Electrical

G. Division 27 – Communications

H. Section 012300 – Alternates ***ADD-2***

1.3 REFERENCES

A. Architectural Woodwork Institute (AWI), Woodwork Institute (WI), and Architectural Woodwork Manufacturers Association of Canada (AWMAC): Architectural Woodwork Standards (AWS), Edition 1, October 2009.

B. Builders Hardware Manufacturers Association: ANSI/BHMA A156.18-2006 American National Standard for Materials and Finishes, 2006.

C. California Code of Regulations: Title 17, Section 93120: Airborne Toxic Control Measure to Reduce Formaldehyde Emissions from Composite Wood Products.

D. Hardwood Plywood & Veneer Association: ANSI/HPVA HP-1-2004 Standard for Hardwood and Decorative Plywood, 2004.

E. National Hardwood Lumber Association: NHLA Rules for the Measurement & Inspection of Hardwood & Cypress, 2007.

F. Scientific Equipment and Furniture Association: SEFA 2-2010 SEFA Recommended Practices for the Installation of Scientific Laboratory Furniture and Equipment.

G. Scientific Equipment and Furniture Association: SEFA 3-2010 SEFA Recommended Practices for Work Surfaces.

H. Scientific Equipment and Furniture Association: SEFA 8-W-2010 Recommended Practices for Laboratory Grade Wood Casework.

I. Scientific Equipment and Furniture Association: SEFA 8-M-2010 Recommended Practices for Laboratory Grade Metal Casework.

J. Underwriters Laboratory: UL61010A-1 Electrical Equipment for Laboratory Use.

K. United States Green Building Council: USGBC, LEED Reference Guide for Green Building Design and Construction For the Design, Construction, and Major Renovations of Commercial and Institutional Buildings Including Core & Shell and K-12 School Projects 2009 Edition.

1.4 BID SUBMITTALS

A. Certification of Compliance: All bidders (including those listed in 2.01-A) must submit a compliance certification statement indicating that their bid includes products and installation which comply with every requirement of the project specifications and drawings (accounting for any RFI responses received during the bidding phase).

B. Certification of Qualifications: All bidders must submit a certification of compliance with the Qualifications requirements outlined below. List specific project experience as evidence of compliance.

C. Substitution Requests: All substitution requests for this scope of work in this section must be made during the bidding phase. No substitution requests will be considered post-bid.

1.5 SUBMITTALS

A. Refer to General Conditions and Division 1 “Submittal Procedures” for submittal requirements. In addition to these requirements, provide submittal requirements specified herein.

B. Submittal requirements:

1. Submittal shall be prepared individually for this specification section. Arrange product data, drawings and information for submission in a complete set for this specification section.
   a. Shop drawings and product data as applicable for required mockups may be submitted separately and should be expedited for submittal as soon as the contract is awarded.
2. Submittal shall contain complete data for all items of this specification section. Periodic or partial submittals of individual components within this specification section will be returned as incomplete and rejected.
3. Submittals shall be organized by specification sequence with section and paragraph number identified.

4. Equipment and components being proposed shall be clearly labeled with all options and accessories indicated and shall be for this specific project. All non-applicable items shall be deleted or struck.
5. Product data submittals provided in PDF format shall consist of fully collated PDF files allowing for collated printing from a single file.
6. Shop drawings shall meet the requirements of the Architectural Woorworking Standards (AWS), except in cases where stricter requirements are identified in this section.

C. Materials List/Product Data: Submit complete materials list, including catalogue data, of all materials, equipment, and products for work in this section.
   1. Product data shall not be duplicative or redundant with shop drawings. Do not include drawings in the product data submittal that are included in the shop drawings.

D. Shop Drawings: Submit complete shop fabrication and installation drawings, including plans, elevations, sections, details and schedules.
   1. Show relationship to adjoining materials and construction.
   2. Show seaming pattern layout of all joints in work surfaces.
   3. Shop Drawings shall be in the form of reproducible, PDF files, or photocopies, to scale, sheet size not to exceed 11 inches x 17 inches (A3).
   4. Shop drawing submittals provided in PDF format shall consist of fully collated files allowing for collated printing from a single file. Blueline prints are not acceptable.

E. Approved Substitution/Approved Equal: In addition to the items required in Division 1, all substitution requests shall include item-by-item comparison of the proposed substitution to this project specification. A copy of the project specification shall be submitted, with each item and subsection of the project specification marked as “Comply” or “Not Comply.” In any cases where “Not Comply” is indicated, an explanation of the relative advantages of the proposed design shall be provided.

F. LEED Submissions: Provide documentation and certification as required relative to the work of this section to support the project’s submission to the USGBC for the credits indicated below.

G. Submit detailed anchorage and attachment drawings and calculations provided by a licensed Structural Engineer complying with the Uniform Building Code Earthquake Regulations and the California Administrative Code, Title 24 Seismic Restraint requirements.

H. Samples: Accompanying Materials List, submit for Architect's approval two (2) samples of each type of specified finish and color range available for casework, laboratory work surfaces, painted steel fabrications, cabinet hardware, and shelving.

I. Certifications/ Test Data: Submit certifications and test data as required elsewhere in this section, including SEFA structural performance test reports, and finish performance test reports.

J. Operations/Maintenance Manuals: At project close-out, submit for Architect's review and Owner's use, complete operating and maintenance manuals that describe proper operating procedures, maintenance and replacement schedules, components parts list, and closest factory representative for components and service.

K. Warranty: Submit manufacturer’s warranty including any additional certifications as needed to meet the requirements specified.

1.6 MOCKUP

A. Provide and install products within this scope of work as part of the laboratory mockup, as indicated on the drawings.

B. Location of mockup must be approved by the Architect and the Owner from the following options:
   1. In final location as shown on drawings. Note that products installed may require correction and/or replacement relative to issues of non-compliance with the contract documents.
   2. In off-site location in the vicinity of the project, provided by the Owner.
   3. At location provided by the laboratory subcontractor, such as the factory.

C. Disposition of mockup:
   1. Mockup items may be incorporated into the final project subject to approval and/or corrections as identified in the mockup review.

2. Mockup items will remain the property of the laboratory subcontractor.

D. The mockup will be reviewed and appropriate comments documented. The mockup – and the associated comments - will become a quality sample against which the remainder of the product installation will be compared.

E. Coordinate delivery, installation, and review of the mockup with the contractor. The mockup should be complete and reviewed prior to fabrication of the remainder of the project. To the extent that the subcontractor elects to fabricate the project prior to review and approval of the mockup, it is understood that this is “at risk” and items may require re-fabrication to address issues that arise from the mockup review.

1.7 PRODUCT HANDLING

A. Protection: Use all means necessary to protect work of this section before, during and after installation including installed work and materials of other trades.

B. Replacement: Any damaged work shall be replaced, repaired and restored to original condition to the approval of the Architect at no additional cost or inconvenience to the Owner.

1.8 ENVIRONMENTAL CONDITIONS

A. It is the responsibility of the general contractor or construction manager to provide appropriate environmental conditions within the laboratory spaces throughout the period of installation of wood and composite wood casework products until substantial completion of the project and turnover to the owner. The relative humidity standards as delineated by the Architectural Woodwork Standards should be followed.

1. Humidity must be controlled between 25% and 55% in all areas where laboratory casework is stored and/or installed.
2. The range of relative humidity change should not exceed 30 percentage points.

B. It is the responsibility of the laboratory furniture subcontractor to assess building environmental conditions prior to the delivery and installation of laboratory casework. Wood laboratory casework shall not, under any circumstances, be installed in spaces which do not comply with the requirements outlined above.

1.9 QUALIFICATIONS

A. Work in this section shall be manufactured by and installed by a company/companies having a minimum of eight years documented experience providing and installing products similar to those specified in laboratory applications; an established organization; and production facilities including all tools, equipment and special machinery necessary for specializing in the fabrication and installation of the type of products specified, with skilled personnel, factory trained workmen and an experienced engineering department. Each shall have the demonstrated knowledge, ability and the proven capability to produce the specified work of the required quality and the proven capacity to complete an installation of this size and type within the required time limits.

1.10 ENVIRONMENTAL COMPLIANCE

A. Composite Wood Products – Composite wood products shall comply with the California Code of Regulations: Title 17, Section 93120: Airborne Toxic Control Measure to Reduce Formaldehyde Emissions from Composite Wood Products.

1. The definition of composite wood products, as applied to this requirement, shall be those as defined in the regulation cited.
2. Comply with the limitations scheduled for enforcement at the time of sale and manufacturing, accounting for the grace periods allowed by the regulation.
3. Provide documentation, certification, and labelling as required by the regulation.

B. Certified Wood: All wood products used in the fabrication shall comply with the FSC’s (Forest Stewardship Council’s) Principles and Criteria as required to contribute towards USGBC LEED Credit MR7.

1. All lumber shall come from forestry sources that are certified under the Forestry Stewardship Council's (FSC) Forest Management Certification program.
2. The casework manufacturer must have FSC Chain-of-Custody (COC) Certification.
3. Documentation:
    a. Provide manufacturer's Chain of Custody Certification.
    b. Provide documentation of the cost, volume, and weight of all wood products provided for this project, including any non-FSC wood products or components.
    c. Provide documentation of the cost, volume, and weight of FSC wood products provided for this project.
    d. In the case of assemblies where some components are FSC-certified and other components are not – provide separate cost, volume, and weight information for each assembly component.

C. Low-Emitting Materials – Composite Wood and Agrifiber Products: Composite wood and agrifiber products used in casework products shall contain no added urea-formaldehyde resins, as required to meet USGBC LEED Credit EQ4.4.
    1. Laminating adhesives used to fabricate on-site and shop-applied composite wood and agrifiber assemblies shall contain no added urea-formaldehyde resins.
    2. Provide certification as required.

D. Wood products as listed below shall contain recycled content to contribute towards achievement of the USGBC LEED Green Building Rating System MR Credits 4.1 and/or 4.2.
    1. Recycled wood products:
        a. Particleboard plywood cores.
    2. The manufacturer shall submit documentation (i.e. "Source of Materials", Invoices, Third Party Validation, etc.) for specified wood products purchased for this project providing recycled content.
        a. Where assemblies contain both recycled and non-recycled wood products, provide documentation of the weight of recycled wood products relative to the total weight of each assembly.
        b. Provide documentation of the cost of each component or assembly which contains recycled wood products. Provide percentages (by weight) and costs of post-consumer recycled material and pre-consumer recycled material within each component.

E. All steel used in the product fabrication shall comply with the recycled steel content requirements to contribute towards achievement of the USGBC LEED Green Building Rating System MR Credits 4.1 and/or 4.2.
    1. All steel used in the fabrication of laboratory cabinets, fume hoods and modular laboratory systems shall have a minimum of 25%recycled steel content, as defined by ISO 14021-1999, calculated as follows:
    2. (% of Post Consumer Recycled Steel Content by Weight) + 0.5 x (% of Pre-Consumer Recycled Content by Weight) >/= 20% (30%) (40%)
    3. Documentation:
        a. The manufacturer shall submit documentation (i.e. "Source of Materials", Invoices, Third Party Validation, etc.) for steel purchased for this project providing recycled content.
        b. Provide documentation of the cost of each component which contains recycled steel.
        c. Provide percentages (by weight) and costs of post-consumer recycled material and pre-consumer recycled material within each component.

1.11 WARRANTY

A. All products will be warranted to be free from defects in materials and workmanship for a period of five years following substantial completion. The manufacturer/dealer/subcontractor shall repair or replace any products (or parts thereof) that are found to be defective. Replacement will include any parts, labor, shipping, and travel expenses involved. Warranty replacement work must be scheduled in coordination with the client's academic/research schedule and may therefore require evening and/or weekend work.

B. Installation Warranty:
    1. Provide unconditional 2-year installation warranty commencing on substantial completion in addition to the manufacturer warranty.

2. Provide a site review with the designated District representative prior to expiration of installation warranty as a condition to end installation warranty period.

PART 2 PRODUCTS

2.1 WOOD LABORATORY CASEWORK AND TABLES

A. Manufacturers: Products complying with this specification may be provided by the following manufacturers. All products specified in this section shall be the provided by a single manufacturer.
   1. CiF Lab Solutions, 53 Courtland Avenue, Vaughan, Ontario, Canada L4K 3T2 Tel: 905 738-5821.
   2. Kewaunee Scientific Corporation, P O Box 1842, Statesville, NC 28687 Tel: 704 873-7202.
   3. Mott Manufacturing Ltd., 452 Hardy Road, P. O. Box 1120, Brantford, ON, Canada N3T 5T3 Tel: 519 752-7825.
   4. Diversified Woodcrafts, Inc., 300 South Krueger Street, Suring, WI 54174 Tel: 920 842-2136.
   5. Pacific Cabinets Inc., 2010 Front Street, Ferdinand, Idaho 83526 Tel: 208 962-5546.
   6. Approved substitution/equal.

B. Quality Standards:
   1. Wood casework shall comply with all requirements of AWS Custom Grade architectural cabinets, unless otherwise specified in this section.

C. Design Requirements:
   1. Door and drawer design: Square edged full flush overlay design with eased edges. Applied panels may be required in areas such as sink cabinets and knee spaces with pencil drawers to complete the flush construction. Reveals shall be within the ranges indicated below; however, they shall be consistent across a given project.
      a. Reveal from top of door/drawer fronts to top of cabinet: 3/32 inch to 3/8 inch.
      b. Reveal from bottom of door/drawer fronts to bottom of cabinet bottom panel: Flush.
      c. Horizontal and vertical reveals between door and drawer fronts: 3/32 inch to 3/16 inch.
      d. Vertical reveal between side of door and drawer fronts and the side of the cabinet: one-half of the typical horizontal and vertical reveal.
   2. Pulls on doors shall be mounted vertically and on drawers horizontally.
   3. Grain Pattern:
      a. Vertical Matched Grain Pattern: Grain pattern on all exposed surfaces shall be vertical. Entire cabinet front must be cut from a single panel.
   4. Toe Kicks/ Toe Spaces:
      a. All tall storage cabinets to have toe space to match base units.
      b. Provide toe spaces at all fully-exposed sides of cabinets, including locations such as the end of island benches, the end of peninsula benches, and outside-corner cabinets. Toe spaces shall run continuously through all items such as knee opening side panels and end panels.
   5. Full-Flush Construction and Installation: All finished panels and surfaces shall be in the same plane as the front of cabinet doors/drawers to provide a true flush overlay appearance.
      a. Filler panels: Provide filler panels where casework units meet perpendicular walls to create a continuous appearance.
         1). Full-flush end-of-run filler panels are required at all conditions where the joint width is one inch or larger. At conditions where the joint width is less than one inch, filler panel should be flush with cabinet body.
      b. Flush panels: Provide fixed fully-edgebanded flush panels at sink cabinets, knee opening drawer units, filler panels, and elsewhere, so that all finished panels are in the same plane as cabinet doors and drawers to provide a true flush overlay appearance.
      c. Applied panels may be required in areas such as sink cabinets and knee spaces with pencil drawers to complete the flush construction.
      d. At outside corners, align side panel of cabinet with the face of the door of adjacent cabinet.
      e. At inside corners, mount filler panels flush with face of adjacent cabinet doors.
      f. At open cabinets (without doors), align face of cabinet with face of adjacent cabinet door. Adjust the depth of the cabinet and toe kick accordingly.
      g. Align other filler panels and applied panels with face of adjacent cabinet doors.
      h. Align face of end panels and knee-opening side panels with face of adjacent cabinet doors.

i. Provide filler/ trim panels at locations where undercounter dishwashers or glasswashers are shown and the units provided do not completely fill the opening indicated.
j. Filler panels shall follow the profile of toe kicks.

6. Extended Ends:
   a. At end-of-run base cabinets, provide extended end to cabinet to create closure to the wall without the use of filler panels. Extended end shall be edgebanded on front and bottom edges. Back edge shall be scribed to the wall with a tight hairline joint. Field-applied panels do not meet this requirement.
   b. At ends of island benches and peninsula benches, provide a paired set of base cabinets, each with an extended end, resulting in a single joint. These extended end panels shall be edgebanded on the front and bottom edges and shall meet at a hairline joint. Applied panels do not meet this requirement.
7. Flush interiors: Set cupboard bottom flush with front-end facers. Surface mounted bottoms and offsets caused by front face frames that interfere with ease of cleaning are not acceptable.
8. Widths of drawer bodies in knee opening rails shall not be less than 18 inches (457 mm). As noted above, applied panel shall be provided to complete the flush construction on either side of the drawer head.

D. Materials and Finishes:

1. Wood:
   a. Definition of cabinet components by surface visibility:
      1). Exposed Surfaces:
         a). Surfaces exposed when doors and drawers are closed.
         b). Surfaces visible when behind glass doors, including tops and bottoms of shelves.
         c). All exterior surfaces of suspended casework.
         d). Open units.
         e). Bottoms of cabinets if 42 inches (1070 mm) or more above finished floor.
         f). Tops of cabinets if less than 72 inches (1830 mm) above finished floor.
         g). Front rail of web frames.
      2). Semi-exposed surfaces:
         a). Surfaces that are visible when solid (opaque) doors are open or drawers are extended, including backs of doors.
         b). Tops of cabinets 72 inches (1830 mm) or more above finished floor when visible from an upper level.
      3). Unexposed surfaces:
         a). Surfaces not normally visible after installation with doors open and drawers extended.
         b). Bottoms of cabinets less than 30 inches (750 mm) above finished floor.
         c). Tops of cabinets over 78 inches (1980 mm) above finished floor and not visible from an upper level.
   b. Wood Species and Veneer Cut: Provide materials that are selected and arranged for compatible grain and color. Do not use materials adjacent to one another that are noticeably dissimilar in color, grain, figure, or natural character markings.
   c. ~~Maple~~Base Bid and Alternate Bid:***ADD-2***
      1). Lumber:
         a). Exposed and semi-exposed:
            (1). Base Bid: Plain sawn Maple, NHLA Grade FAS. ***ADD-2***
            (2). Alternate Bid: Quarter Sawn Hickory, NHLA Grade FAS. Refer to Section 012300 for additional information. ***ADD-2***
         b). Unexposed: Select grade hardwood of a species suitable for the specified purpose.
         c). All lumber shall be clean and free of defects; kiln and air dried to uniform moisture content of 6 percent.
      2). Veneer:
         a). Exposed: Base Bid: Plain sliced white select maple, grade A. Alternate Bid: Quarter Cut Hickory, Basis of Design: Dooge Veneers; refer to Section 012300 for additIonal information. Thickness: 1/50 inch (0.5 mm), minimum. ***ADD-2***
            (1). Color and Matching:
               (a). 100% sapwood, no heartwood allowed.
               (b). Slight color streaks or marks.

(c). Slight color variation.
(d). No sharp contrast at veneer joints.
(2). Natural Characteristics:
(a). Small conspicuous burls: combined average not to exceed 4 per 10 square feet (1 m^2).
(b). Conspicuous burl size: 3/8 inch (9.5 mm), maximum.
(c). Conspicuous pin knots: combined average not to exceed 4 per 32 square feet (3 square meters). Maximum pin knot size – dark part: 1/8" (3.2mm). Maximum pin knot size – total: ¼" (6.4mm).
(d). Scattered sound repair knots, bark pockets: not allowed.
(e). Slight mineral streaks, worm tracks, cross bars and vine marks.
(3). Manufacturing Characteristics:
(a). Rough cut or ruptured grain is not allowed.
(b). Blended repaired tapering hairline Splits: two 1/16 inch (1.6 mm) x 6 inch (152 mm) on end panels only.
(4). Repairs: Small blending allowed.
(5). Flitch Width, Face Components: 5 inches minimum, except for outside components.

2. Plywood
   a. Typical, Unless Otherwise Noted: Hardwood Veneer Plywood
      1). Product shall be provided with hardwood face veneers as specified above.
      2). Plies:
         a). ¾ inch (19 mm): minimum 7-ply, including face veneers.
         b). 1 inch (25 mm): minimum 9-ply, including face veneer.
      3). Physical Properties:
         a). Screwholding: 355 lb at face.
         b). Average modulus of rupture: 7346 psi (50.65 N/mm^2).
   b. Drawer and Door Fronts: ANSI A208.1 M3 Grade Industrial Particleboard Core Plywood.
      1). Product shall be provided with hardwood face veneers as specified above.
      2). Plies:
         a). 3-ply, including face veneers.
      3). Minimum Physical Properties:
         a). Screwholding: 247 lbs at face, 225 pounds at edge.
         b). Average modulus of rupture: 2,393 lb/in2.
         c). Modulus of elasticity: 398,900 lb/in2.
         d). Hardness: 500 lbs.
   c. Drawer box back, front and sides: Finnish or Baltic Birch Plywood
3. Hardboard: Dry process S2S hardboard made from compressed exploded wood fibers.
4. Edgeband/Facer: 1/8" (3 mm) hardwood; species as described above.
5. Dowels: 8 mm, diameter, minimum, hardwood, laterally fluted with chamfered ends.
6. Glue: Type 2 or Type 3 water resistant glue with gluing done in clamps and jigs.
7. Finish for Wood Laboratory Components:
   a. All wood components shall be fully sanded on all surfaces including the underside of exposed components, glazed door element inside edges, penetrations for the attachment of drawer heads, screws attaching adjacent cabinets, cutouts at grilles, and all other such locations. The final installation shall present no rough, splintered, or unfinished surfaces at any visible, exposed, semi-exposed, or touchable locations. This does not apply to components of surfaces which will be fully concealed in the final installation.
   b. Finish processes (stains and finishes) shall be by means of compression spray or a UV roll coater, providing high-transfer efficiency low waste generation. Solvent applied coatings are not acceptable and will not be considered. Manufacturer shall supply documentation that waste generated during the finishing process, is a non-hazardous material, eliminating liquid waste disposal in landfills.
      1). Chemically Resistance Finish: Finish for all wood products shall be environmentally friendly, highly chemically resistant, water-borne, laboratory-grade finish that satisfies the requirements specified herein for chemical and durability resistance. A letter from a third-party validator, verifying independent test results, shall be submitted.

2). Operator Protection: The application shall be convenient and easily mastered, in a custom spray booth. The finish process shall be cleanly contained and shall have no solvent odor, and shall be applied in an air-conditioned room.
3). VOC Emissions: Water-borne finishes shall be sprayed and cured with a near zero (2.0 lbs. per gallon for 'clean finish') VOC (Volatile Organic Compounds) emissions.
4). Offgasing: After all wood products have cooled from the curing ovens, the coating shall be firm and stable. No further emissions or "Offgasing/Decomposition" vapors shall occur at room temperature.

c. Manufacturer may uses either of the following finish systems:
1). Customized, high-solids, cross-linked, ultraviolet light (UV)-cured coating developed for durability, including abrasion, chemical, impact, and scratch resistance, for flat-line applications. Coatings shall have little or no VOCs.
2). Chemical-resistant modified acrylic urethane finish with built-in UV blocker, or equal, applied over permanent wood stain.

d. Stain Color:
1). Base Bid: To be selected by Architect from manufacturer's full published color range. ***ADD-2***
2). Alternate Bid: Clear finish. Refer to Section 012300 for additional information. ***ADD-2***

e. Application:
1). Finish application and sequence shall be as recommended and designed by the manufacturer for a high quality, laboratory-grade wood casework finish.
2). Preparation: Sand exposed and semi-exposed surfaces smooth, free from dirt and defects.
3). Stain application: Apply stain of color selected to all exposed and semi-exposed casework surfaces. Apply in a manner to achieve a match with the selected color sample upon completion of application of the finish.
4). Finish application: Apply chemical resistant top finish to all stained surfaces. Apply to doors after any notching for hinges has been performed. Finished surfaces shall be even, water-clear and bright. Cloudy or muddy finishes carrying tinting pigments will not be acceptable.

8. Glass: Framed glass doors:
a. 1/8 inch (3mm) to 7/32 inch (5.5 mm) nominal tempered glass.
b. Without imperfections or marred surfaces.
c. All glass should have etched safety information, readable from outside the cabinet.

E. Construction:
1. Base Cabinets:
a. Assembly: Dowel and/or mortise-and-tenon joinery secured with countersunk screws and pressure-glued.
b. Cabinet Top:
1). L-shaped front rail of ¾" plywood: 1½ inches (38 mm) x 2¼ inches (57 mm); or horizontal front rail of 1 inch (25 mm) x 3 inches (76 mm) hardwood. Back rail: ¾" plywood or hardwood, 3-3/4" tall.
c. Cabinet Bottom: ¾ inch (19 mm) thick plywood. Set flush and join to cabinet end panels. Front edge shall be edgebanded.
d. Cabinets Ends/Sides, and Backs Exposed to View from the Outside: ¾ inch (19 mm) thick plywood.
1). Side panels and end panels: edgeband front edge and bottom edge.
e. Cabinet Backs, Exposed to View From the Inside at Open Units and Units with Glazed Doors: 1/4 inch (19 mm) thick veneer core plywood.
f. Cabinet Back, Semi-Exposed and Unexposed:
1). Removable hardboard, 1/4 inch (6 mm) thick.
2). Sink base back shall be half-height construction to allow for plumbing and sink waste connection.
3). Provide split back on drawer cabinets.
g. Cabinet Base: 3¾ inches (95 mm) x ¾ inch (19 mm) front hardwood or veneer core plywood toe space rail, mounted between end panels, forming a 4 inch (102 mm) high x 2½ inch (63 mm) deep toe space, closed to cupboard bottom. Secure rails to cabinet end panels.

h. Shelves: 1 inch (25 mm) thick full-depth, 9-ply hardwood plywood. Full-depth is defined as a shelf whose front edge is within ½ inch (13mm) of the face of the cabinet when the shelf is fully back in the cabinet.
   1). Front edge of shelves shall be edgebanded.
   2). Shelf Adjustment: All shelves shall be adjustable on 32 mm centers.
   3). Shelf Tolerance: Shelves shall fit into cabinets or into shelf supports with a tolerance of 1/16 inch per side maximum.

i. Drawer construction:
   1). Drawer box back, front and sides shall be of ½ inch (13 mm), 9-ply Finnish or Baltic Birch veneer plywood, with eased top edge, finished with a Gloss Level 7 polyester acrylic finish. The top edges of the completed drawer bodies shall be very smooth to the touch and shall not present any rough or splintered surfaces. Sides shall be full height with 1 inch (25 mm) clearance to frame opening. Drawers shall be a minimum of 18 inches front to back.
   2). Acceptable drawer joinery options:
      a). Dowel: Glued under pressure; 32mm, minimum, dowel spacing to 4 inches (102 mm) high, 64 mm dowel spacing above 4 inches (102 mm).
      b). Multiple Dovetail: Tight fitting and glued.
   3). Drawer bottom shall be Baltic Birch veneer plywood. Bottom shall be grooved into the 4 sided drawer box and sealed with hot melt glue process around entire drawer bottom perimeter.
      a). Drawers up to 24 inches wide: 3/8 inch (6mm) thick 7-ply Baltic Birch veneer plywood.
      b). Drawers greater than 24 inches wide: 1/2 inch (13 mm) thick 9-Ply Baltic Birch veneer plywood.

j. Door and Drawer Heads: shall be ¾ inch (19 mm) thick plywood with edgebanding. Edges shall be as specified previously in this section. Drawer heads shall be screwed to drawer box.

k. Flush Panels: As described in the Design Requirements section of this specification.

l. Front Horizontal intermediate Rail: ¾ inch (19 mm) x 1½ inches (38 mm) exposed hardwood rail shall be provided between doors and drawers. For all drawer units at benches where service fitting connections are not accessible via an adjacent knee opening filler or cabinet filler panel, drawer units to be provided with Keku fasteners (Keku fasteners not required at other locations). The drawer unit intermediate horizontal and vertical box frames must be removable. These components shall be assembled with Keku suspension fittings as manufactured by Häfele America Co. or approved so these members are easily removable at any time with no special tools to gain access to concealed piped services behind.

m. Intermediate Back Rail: 1½ inch (38 mm) x ¾ inch (19 mm) hardwood lumber to accept hardboard security panel between drawers.

n. Security Panels: Provide hardboard security panels, 1/8 inch (3 mm) thick, in frames when keyed-different locks are specified, or where individual padlock hasps are indicated. Inset security panel into frame on all four sides.

o. Where drawers are indicated to be removable and without ball bearing glides provide a drawer keel and a mating case channel, wherein weight loads are distributed over a three (3) point area. They shall be furnished one (1) pair on all drawers up to 24 inches wide, two (2) pairs on drawers over 24 inches wide. Drawer keels shall be 1-13/16 inches wide, chamfered to a 30 degree angle, allowing it to mate with the 3 inch wide case channel. Security panels, where required, shall be an integral part of this assembly. Removable horizontal intermediate rails and case channels shall be provided for all drawer units at benches where service fitting connections are not accessible via an adjacent knee opening filler or cabinet filler panel using components as described above. Provide a drawer stop mounted on top of the drawer back to prevent inadvertent drawer removal which can be manually released. Working parts of drawer stop to be made of corrosion resistant stainless steel and plastic. Plated metal stops subject to failure in a corrosive atmosphere are not acceptable.

2. Wall, upper and tall cases:
   a. Shall be manufactured with materials and joinery methods as specified for base units, unless otherwise indicated.
   b. Edgebanding:

1). Wall cabinets side panels: Edgeband front and bottom edges. Wall cabinet end panels: Edgeband front, bottom, and top edges.
2). Edgeband front, top, and bottom edges of tall cabinet side and end panels.

c. Cabinet Interior Backs: 1/4 inch thick veneer core plywood, typical for all exposed, and semi-exposed interior backs.
d. Hardwood plywood tops: 1 inch (25 mm) thick with front edge edgebanded.
e. Wall and upper case hardwood plywood bottoms: 1 inch (25 mm) thick. Tall case hardwood plywood bottoms ¾ inch (19 mm) thick. Edgeband front edges.
f. Bottom hardwood kick rail on tall cases: 3¾ inches (95 mm) x ¾ inch (19 mm) front hardwood or veneer core plywood toe space rail, mounted between end panels, forming a 4 inch (102 mm) high x 2½ inch (63 mm) deep toe space, closed to cupboard bottom. Secure rails to cabinet end panels.
g. Solid doors shall be the same construction as specified for base cabinets.
h. Framed-glazed doors: Hardwood construction, ¾ inch (19 mm) x 2¾ inch (70 mm) machined to accept glass. Ease all edges, interior and exterior, including those that frame the glazing. Provide extruded vinyl retaining molding on interior designed so glass can be replaced without tools
i. Shelves: 1 inch (25 mm) thick full depth, 9-ply hardwood plywood. Full-depth is defined as a shelf whose front edge is within ½ inch (13mm) of the face of the cabinet when the shelf is fully back in the cabinet.
    1). Front edge of shelves shall be edgebanded.
    2). Front edge of open shelves:
        a). Retainer Rail: Retainer rail as specified elsewhere in this section and detailed on drawings.
    3). Shelf adjustment:
        a). Wall units: All shelves shall be adjustable on 32 mm centers.
        b). General purpose tall units: One fixed shelf. All others shall be adjustable on 32 mm centers.
    4). For tall cabinets indicated with Dividers provide 3 equally spaced bent stainless steel ¼ inch rod dividers for each shelf and cabinet bottom positioned perpendicular to the long dimension of the shelves and bottom. Rod dividers to be 12 inch long x 2 ½ inches tall above surface, centered in the cabinet front to back, counter sunk into shelves, and bottom and secured with silicon sealant.

3. Wood-Framed Laboratory Tables
    a. Tops: Refer to Laboratory Furnishing drawings for worktop materials, described in the Laboratory Work Surfaces section of this specification.
    b. Vibration absorbing isolation: Provide a continuous wide bead of clear silicone sealant to the top of all supporting rails. Allow complete cure before attachment of the work surface.
    c. Electrical receptacles: Where indicated on the Laboratory Furnishings or Electrical drawings provide cutouts for electrical receptacles as work of this Section and coordinate with Division 26. Cord, plug, back boxes, electrical devices, faceplates, wiring, and junction boxes shall be provided under the work of Division 26
    d. Leveling Glide and Leg Shoe: Each leg other than those fitted with casters, shall have leveling glides and leg shoes.
        1). Leveling glides: (2 inch) (48 mm) diameter, two-piece pivot construction, steel housing, nonmarring, phenolic or translucent plastic insert, (1/2 inch) (12 mm) diameter, minimum (1 1/2 inch) (36 mm) long zinc plated stems. Each glide shall have a load bearing capacity of 150 lbs.
        2). Leg shoe: Black coved vinyl or rubber leg shoe, 2 inches (50 mm) in height.
    e. Casters: Where indicated on Laboratory Furnishing drawings, provide sets of 3 ½ inch (89 mm) diameter wheels with self-lubricating bearing, rated to carry 250 pounds (113 kg) minimum each. Each caster must swivel and have a locking brake at front wheels. Wheel shall be of molded polyurethane tread mechanically locked to a polyolefin core. Moveable tables to have all 4 swivel and locking casters.
    f. Rails: Not less than ¾ inch x 4-5/16 inch (19 x 110 mm) solid lumber with attached heavy duty steel corner braces, grooved and screwed into both rails at each corner. Groove rails for "Z" irons or drill for top attachment.
    g. Reinforcing cross rails: Hardwood lumber doweled and glue into front and back rails and pinned at intervals not more than 33 inches (838 mm) on center in tables without drawers.

h. Legs: Not less than 2 inch x 2 inch (50 x 50 mm).
    1). Construction: Either of the following is acceptable:
        a). Made of one solid piece of lumber
        b). Made from two pieces of solid lumber glued together. Individual components shall be carefully selected for color match. The glue joint shall be on the diagonal of the leg, as seen in plan. All legs shall be oriented so that the diagonals converge to create an "X" in plan.
    2). Veneered lumber or wood of any type is not acceptable for leg components.
i. Leg rails and spreader rail: Not less than 1¼ inch x 2½ inch (32 x 63 mm) hardwood lumber.
j. All exposed edges of legs and rails shall be eased, sanded smooth, and finished per the requirements for wood laboratory casework components.

4. Aprons and leg assemblies:
    a. Apron: Not less than ¾ inch (19 mm) x 4-5/16 inch (110 mm) hardwood.
    b. Legs: Not less than 2 inch (50 mm) x 2 inch (50 mm) hardwood.
    c. Leg rails: Not less than 1¼ inch (32 mm) x 2½ inch (63 mm) hardwood.
    d. All exposed edges of legs and aprons shall be eased, sanded smooth, and finished per requirements described above for wood laboratory casework components.
5. Fume Hood Cabinets:
    a. Purpose-designed wood cabinet with fixed panel above door to conceal cup sink and plumbing.
    b. Provide wood fume hood cabinets where adjacent cabinetry below a fume hood is wood.
6. Wood Casework Construction Performance:
    a. Base cabinets shall be constructed to support a uniformly distributed load of 200 lbs. minimum per square foot (1000 kg/m²) of cabinet top area (total maximum of 2000 lbs. (900 kg)), including working surface, without permanent distortion or interference with door and drawer operation.
    b. Base cabinets shall be constructed so that when supported on both back corners and one front corner; with a counterweight load of 350 pounds placed on the rear corner behind the supported front corner; and with a load of 200 pounds placed on the unsupported corner – there shall be no permanent damage after 24 hours of loading. Maximum allowable deflection shall not exceed 1/8 inch.
    c. Swinging doors mounted on base units shall support a 200 lb. (113 kg) load located at a test point 12 inches (305 mm) measured horizontally from hinge along the top edge of door through a swing of 160 degrees. Weight test shall allow nominal temporary deflection, but no permanent distortion. Door assembly shall be twist- resistant and rigid, and shall close in a flat plane against the cabinet to permit the door catch at top of door to function properly.
    d. Drawers shall be constructed so that they will support a 150 pound load hung on the drawer head centerline, with the drawer opened 13 inches (330mm), for five minutes. There shall be no interference with the normal operation of the drawer and the drawer head should remain tightly fastened to the drawer.
    e. Drawers shall be constructed so that a drawer that is removed and supported on four corners will support a 10 pound sand or shot bag dropped from a height of 24 inches (610mm) without damage.
    f. Drawers shall be constructed so that a drawer that is removed and supported at a 45 degree angle shall be capable of withstanding three impacts of a 2 inch (51mm) diameter, 12 inch (305mm) long steel rod (approximately 10 pounds in weight) released from 13 inches (330mm) from the front and back of the drawer. The drawer joinery shall remain intact and the drawer shall operate normally when placed back into the casework cabinet.
    g. Drawers mechanical suspension systems shall be designed and attached to that a drawer uniformly loaded with 75 pounds of sand or shot bags shall operate freely without binding over its full range for 50,000 cycles at a rate not exceeding 10 cycles per minute. The force required to open and close the loaded drawer for the purposes of this test shall not exceed 8 pounds.
    h. Shelves shall be designed and supported to that they can support a load of 40 pounds per square foot, up to a maximum of 200 pounds per shelf, for 24 hours with no more than 0.35 inches (9mm) of deflection maximum.

F. Hardware: As specified elsewhere in this Section.

G. Wood Finish Chemical Resistance Performance Requirements:

1. Manufacturer shall submit wood finish chemical resistance performance test results. Testing to be performed by independent testing agency.
2. Procedure: Place panel on a flat surface, clean with soap and water and blot dry. Condition the panel for 48-hours at 73º +/- 3ºF (23º +/- 2ºC) and 50 +/- 5% relative humidity or the currently accepted guideline set by ASTM. Test the panel for chemical resistance using forty-nine different chemical reagents by one of the following methods. For both methods, leave the reagents on the panel for a period of one hour. Wash off the panel with water, clean with detergent and naptha, and rinse with deionized water. Dry with a towel and evaluate after 24-hours at 73º +/- 3ºF (23º +/- 2ºC) and 50 +/- 5% relative humidity, or the currently accepted guideline set by ASTM.
   a. Method A: Test volatile chemicals by placing a cotton ball saturated with reagent in the mouth of a 1-oz. (29.574cc) bottle and inverting the bottle on the surface of the panel.
   b. Method B: Test non-volatile chemicals by placing five drops of the reagent on the surface of the panel and covering with a 24mm watch glass, concave side down.
3. Rating System: Evaluations shall use the following rating system:

Level 0	No detectable change.
Level 1	Slight change in color or gloss.
Level 2	Slight surface etching or severe staining.
Level 3	Pitting, cratering, swelling, or erosion of coating. Obvious and significant deterioration.

4. Acceptance Level:
   a. Individual test results for the specified 49 reagents shall be within the Range for that reagent as specified on the table below.
   b. There shall be no more than four (4) Level 3 conditions.
5. Table of reagents:

Test No.	Chemical Reagent	Test Method	Range
1.	Acetate, Amyl	A	0-1
2.	Acetate, Ethyl	A	0-1
3.	Acetic Acid, 98%	B	0-1
4.	Acetone	A	0
5.	Acid Dichromate, 5%	B	0-1
6.	Alcohol, Butyl	A	0-1
7.	Alcohol, Ethyl	A	0
8.	Alcohol, Methyl	A	0-1
9.	Ammonium Hydroxide, 28%	B	0-2
10.	Benzene	A	0-1
11.	Carbon Tetrachloride	A	0-1
12.	Chloroform	A	0
13.	Chromic Acid, 60%	B	0-1
14.	Cresol	A	0-2
15.	Dichloroacetic Acid	A	0-3
16.	Dimethylformamide	A	0-2
17.	Dioxane	A	0-1
18.	Ethyl Ether	A	0-1
19.	Formaldehyde, 37%	A	0
20.	Formic Acid, 90%	B	0-1
21.	Furfural	A	0-1
22.	Gasoline	A	0
23.	Hydrofluoric Acid, 37%	B	0-2
24.	Hydrofluoric Acid, 48%	B	0-2
25.	Hydrogen Peroxide, 30%	B	0-1
26.	Iodine, Tincture of	B	0-2
27.	Methyl Ethyl Ketone	A	0
28.	Methylene Chloride	A	0-1
29.	Monochlorobenzene	A	0-1
30.	Naphthalene	A	0
31.	Nitric Acid, 20%	B	0
32.	Nitric Acid, 30%	B	0-2
33.	Nitric Acid, 70%	B	2-3

Test No.	Chemical Reagent	Test Method	Range
34.	Phenol, 90%	A	0-2
35.	Phosphoric Acid, 85%	B	0-1
36.	Silver Nitrate Saturated	B	0-1
37.	Sodium Hydroxide 10%	B	0-2
38.	Sodium Hydroxide 20%	B	0-2
39.	Sodium Hydroxide 40%	B	0-2
40.	Sodium Hydroxide Flake	B	0
41.	Sodium Sulfide Saturated	B	0
42.	Sulfuric Acid, 33%	B	0-1
43.	Sulfuric Acid, 77%	B	0-1
44.	Sulfuric Acid, 96%	B	1-3
45.	Sulfuric Acid 77% & Nitric Acid 70% equal parts	B	1-3
46.	Toluene	A	0
47.	Trichloroethylene	A	0
48.	Xylene	A	0
49.	Zinc Chloride, Saturated	B	0

2.2 METAL LABORATORY CASEWORK AND TABLES

A. Manufacturers: Products complying with this specification may be provided by the following manufacturers. All products specified in this section shall be the provided by a single manufacturer. Corrosive and flammable liquid/solvent storage cabinets may also be provided by the manufacturers listed with their descriptions.

1. Laboratory Casework:
   a. Air Master Systems, 6480 Norton Center Drive, Muskegon, MI 49441 Tel 231 798-1111.
   b. Bedcolab Ltd, 2305 Francis Hughes Avenue, Laval, Quebec, Canada H7S 1H5 Tel 514 384-2820.
   c. CiF Lab Solutions, 53 Courtland Avenue, Vaughan, Ontario, Canada L4K 3T2 Tel: 905 738-5821.
   d. Jamestown Metal Products, Inc., 178 Blackstone Avenue, Jamestown, NY 14701 Tel: 716 665-5313.
   e. Kewaunee Scientific Corporation, P O Box 1842, Statesville, NC 28687 Tel: 704 873-7202.
   f. Mott Manufacturing Ltd., 452 Hardy Road, P. O. Box 1120, Brantford, ON, Canada N3T 5T3 Tel: 519 752-7825
   g. Approved substitution/equal.

B. Metal Laboratory Casework

1. Design Requirements:
   a. Door and drawer front design: Square edged inset metal construction with all front surfaces above the toe space in the same plane.
   b. Pulls on doors shall be mounted vertically and on drawers horizontally.
   c. All tall cases shall be provided with toe space to match base units.
   d. All cabinets shall be constructed and finished to be suitable for use as stand-alone units and to permit future rearrangement without the need for additional parts or finish.
   e. Widths of drawers in knee opening rails shall not be less than 24 inches (600 mm) or the width of the rail whichever is the lesser.
   f. Cabinets below fume hoods that conflict with ductwork, cup sinks, or waste connections shall be 19 inches deep to accommodate any obstructions.
2. Materials:
   a. Steel: Cold-rolled furniture stock sheet steel, prime grade, roller leveled.
      1). Steel shall be treated at the mill to be free of scale, ragged edges, deep scratches, or other injurious effects.
      2). All gauges indicated are to be U.S. standard.
   b. Glass: Framed glass doors:
      1). 1/8 inch (3mm) to 7/32 inch (5.5 mm) nominal tempered glass.
      2). Without imperfections or marred surfaces.
      3). All glass should have etched safety information, readable from outside the cabinet.

3. Base, Wall, Upper, and Tall Cabinets:
   a. General:
      1). Exterior corners: shall be spot and arc welded with heavy back up reinforcement at exterior corners. All face joints shall be arc welded and ground smooth to provide a continuous flat plane.
      2). All units shall have a cleanable smooth interior. Front and rear posts, reinforcing members or channel uprights shall be enclosed full heights on all cabinet openings.
      3). End Uprights shall be formed into not less than a channel formation at top, bottom, back and front.
      4). The edge of the vertical uprights shall be formed to provide a strike for doors and drawers, and shall be perforated for the support of drawer channels, intermediate rails and hinge screws.
      5). An upright filler shall be screwed in place in all cupboard units to close the back of the channel at front of the upright and to provide a smooth interior for the cupboard to facilitate cleaning.
      6). The upright filler shall be perforated with shelf adjustment holes at no more than ½ inch (12.7 mm) centers.
      7). The inside front of the upright shall be further reinforced with a full height 14 gauge (2.0 mm thick) hinge reinforcement angle.
      8). Die Formed Gussets: shall be furnished in each bottom corner of base units to insure rigidity, and a 3/8 inch (10 mm) -16 leveling bolt, 3 inches (75 mm) long, shall engage a clinch nut in each gusset. Each leveling bolt and gusset shall be capable of supporting 500 lbs (225 kg). (Each unit shall support 2000 lbs. (900 kg) uniformly distributed on a work top.) Provide caps at all penetrations provided to access leveling devices.
   b. Cabinet Base:
      1). Case bottom and bottom rail shall be formed of one piece of metal except in corner units and shall have both sides and back formed up or down and shall be offset in front to provide a door and drawer recess rabbet.
      2). Toe Space Rail: shall extend up and forward to engage bottom rail to form a smooth surfaced toe space, 3 inches (75 mm) deep and 4 inches (100 mm) high. Whenever the base is omitted for units to be set on building bases or separate metal bases, the toe space rail shall extend back 4½ inches (115 mm).
   c. Cabinet Back, Unexposed: Cabinet back shall consist of a top and bottom rail, channel formed for maximum strength and welded to back and top flange of end uprights, with space between left open for access to plumbing lines. All units shall be provided with removable back panels.
      1). Sink units shall be provided with fixed half-height backs to allow plumbing lines to enter and exit the cabinet through the open area.
   d. Shelves: shall be full depth formed down ¾ inch (19 mm), back 7/8 inch (22 mm) and up ¼ inch (6 mm) at front and rear and formed down at ends ¾ inch (19 mm). Shelves over 36 inches (914 mm) in length shall be additionally reinforced by a flanged channel shaped member electro-welded to underside of shelf. Shelves shall be adjustable. Full-depth is defined as a shelf whose front edge is within ½ inch (13mm) of the face of the cabinet when the shelf is fully back in the cabinet.
      1). Restraint: At open tall shelf units, provide retainer rail as specified elsewhere in this section and detailed on drawings.
   e. Doors: shall be readily removable and hinges easily replaceable. Hinges shall be applied to the case and door with screws. Welding of hinges to either case or door will not be acceptable.
   f. Door and Drawer Heads:
      1). Metal, Flush Inset: shall be a two-piece sheet steel assembly of ¾ inch (19 mm) overall thickness to consist of an inner pan formed as an extension of the drawer body, an outer pan having a channel formation on all four sides, and the interior space filled with a non-organic sound deadening material at the time of assembly. Door Pans and Drawer Heads shall be painted inside and out prior to assembly.
         a). All four corners of door and drawer heads shall be welded closed and ground smooth to eliminate exposure of raw edges and open gaps.
         b). Glazed Hinged Door Contruction: Glazed swinging doors shall be 3/4" thick and consist of an inner and outer door pan welded to form a single unit. Outer door pan

shall be 18 gauge steel, formed into a channel or flanged shape at all four sides. It shall be pierced and formed to create a 3" wide frame with a beveled edge around the glass opening in the center of the door. Inner door pan shall be 18 gauge steel, flanged at all four sides, pierced for a glass opening in center of the door, with 16 gauge hinge reinforcements welded in place. Glazing shall be held in place by a rubber or vinyl gasket around the entire edge of the glass. Outer door pan shall be prepared as necessary to accept attachment of pulls as specified elsewherein this section.

g. Drawer Construction:
   1). Drawer bodies shall be made in one-piece construction including the bottom, two sides, back and inner front. They shall be fully coved at interior bottom on all four sides for easy cleaning. Sides shall be full height with ½ inch (13 mm) clearance to frame opening. Drawers shall be a minimum of 18 inches front to back.
   2). Drawer Suspension: Refer to Drawer Slides under Hardware section.
   3). Drawer stops: shall be provided to insure smooth, quiet operation at point of contact with cabinet front.

h. Top Horizontal Rail: Provide on base cabinets such that rail shall interlock within the flange at top of end panels for strength. Reinforcements shall be provided at all front corners for additional welded strength between vertical and horizontal case members.

i. Intermediate Rails: Provide on base cabinets such that rails shall be provided between doors and drawers, but shall not be provided between drawers unless made necessary by locks in drawers. When required, intermediate rails shall be recessed behind doors and drawer fronts, and designed so that security panels may be added as required.

j. Intermediate Vertical Uprights: shall be furnished to enclose cupboards when used in a unit in combination with a half width bank of drawers. However, to allow storage of large or bulky objects, no upright of any type shall be used at the center of double door cupboard units.

k. Security Panels: Provide security panels in frames between drawers and cabinets within a cabinet where keyed different locks are indicated.

l. Knee Space Service Strip Cover Panels where specified, shall be 18 gauge (1.3 mm thick) steel, of the same finish as cabinets, and shall be furnished at open spaces under counter top where no cabinets occur. They shall be easily removable and shall cover piping from underside of top of service ledge to floor.

m. Provide filler panels where required between cabinets, at corner intersections of cabinets, between cabinets and walls and wherever else required for a complete finished installation. For tall cabinets, filler panels shall be provided for vertical face and top. For wall cabinets, filler panels shall be provided for vertical face, top and bottom. Filler panels shall follow the profile of toe kicks.

4. Metal-Framed Laboratory Tables
   a. Tops: Refer to Laboratory Furnishing drawings for worktop materials, described in the Laboratory Work Surfaces section of this specification.
   b. Vibration absorbing isolation: Provide a continuous wide bead of clear silicone sealant to the top of all supporting rails. Allow complete cure before attachment of the work surface.
   c. Electrical receptacles: Where indicated on the Laboratory Furnishings or Electrical drawings provide cutouts for electrical receptacles as work of this Section and coordinate with Division 26. Cord, plug, back boxes, electrical devices, faceplates, wiring, and junction boxes shall be provided under the work of Division 26.
   d. Leveling Glides and Leg Shoes:
      1). Each leg other than those fitted with casters shall have leveling glides: (2 inch) (48 mm) diameter, two-piece pivot construction, steel housing, nonmarring, phenolic or translucent plastic insert, (1/2 inch) (12 mm) diameter, minimum (1 1/2 inch) (36 mm) long zinc plated stems. Each glide shall have a load bearing capacity of 150 lbs.
      2). Each leg other than those fitted with casters and adjustable-height legs, shall have leg shoes: Black coved vinyl or rubber leg shoe, 2 inches (50 mm) in height.
   e. Construction:
      1). Table rails, legs, and spreader rails (where shown) shall be fully welded into a single-piece table frame structure. No mechanical joints between members are permitted.
   f. Rails: Not less than 1½ inch x 4½ inch 16 gauge (38 x 114 x 1.6 mm) channel steel sections, reinforced as necessary for leg attachment.
   g. Legs: Not less than 2 inch x 2 inch 16 gauge (50 x 50 x 1.6 mm) square tubular steel sections.

h. Where shown, leg rails and spreader rail: Not less than 1¼ inch x 2½ inch 16 gauge (32 x 63 x 1.6 mm) steel sections, reinforced as necessary for leg attachment.
i. Materials and Finish: Refer to Metal Fabrications specifications in this Section for material and finish requirements.
j. Low level shelf: If shown on Laboratory Furnishing drawings shall be of 20 gauge (1.0 mm thick) steel sheet with perimeters formed down ¾ inch (19 mm). Shelves over 36 inches wide shall be reinforced by a flanged channel shaped member electro-welded to underside of shelf.

5. Aprons and leg assemblies:
   a. Apron: Not less than 1½ inch (38 mm) x 4 inch (114 mm) 16 gauge (x 1.6 mm thick) channel steel sections, reinforced as necessary for leg attachment.
   b. Legs: Not less than 2 inch (50 mm) x 2 inch (50 mm) 16 gauge (x 1.6 mm thick) square tubular steel sections.
   c. Leg rails: Not less than 1¼ inch (32 mm) x 2½ inch (63 mm) 16 gauge (x 1.6 mm thick) steel sections, reinforced as necessary for leg attachment. Each leg shall have a recessed leveling screw and a black, coved vinyl or rubber leg shoe, 2 inches (50 mm) in height.
6. Fume Hood Cabinets:
   a. Purpose-designed metal cabinet with fixed panel above door to conceal cup sink and plumbing.
   b. Provide metal fume hood cabinets where adjacent cabinetry below a fume hood is also metal.
7. Corrosives Storage Cabinets:
   a. Manufacturers:
      1). Manufacturers of metal laboratory casework.
      2). Justrite Manufacturing Company, 2454 Dempster St., Suite 300, Des Plaines, IL 60016 Tel: 800 798-9250.
      3). Approved substitution/equal.
   b. Purpose-designed lined metal cabinet.
   c. Lining: All interior surfaces of the cabinet shall be coated with a 100% seamless non-porous flame-coated thermoplastic liner. Liner shall be applied to all interior walls, ceiling, sump, door interiors, and shelving. Basis of design: Justrite Chemcor. No known equal.
      1). Shelf: Removable adjustable full-depth metal shelf coated with lining material. Full-depth is defined as a shelf whose front edge is within ½ inch (13mm) of the face of the cabinet when the shelf is fully back in the cabinet.
   d. Label: "CORROSIVES" in conspicuous silk-screened lettering. Stick-on decals are not acceptable. Size and style of lettering shall match the Flammable Liquid/Solvent Storage Cabinet label. Lettering shall be 2 ½ inches tall. Color of lettering shall be red. If cabinet color is red, lettering shall be yellow.
   e. Locks: Cabinet doors shall be lockable. Lock shall have not metal parts exposed within the lined interior.
   f. Venting:
      1). Cabinets below or adjacent to fume hoods: Provide and install 2 inch (50 mm) diameter schedule 40 PVC vent pipe and PVC fittings. Termination of vent pipe maybe one of the following:
         a). Extend vent pipe 4 inches (100 mm) above dished worktop, behind the baffle in the hood, as shown on the drawings. Provide hole through fume hood work surface above the corrosive storage cabinet to accommodate 2 inch (50 mm) diameter vent pipe. Seal gap around penetration with clear silicone sealant.
         b). Extend vent pipe up within the fume hood side wall and vent through the hood side wall liner behind the upper portion of the fume hood baffle.
      2). Cabinets not below or adjacent to fume hoods: Vent connection to exhaust duct system shall be by Division 23. Provide hole in back of cabinet to accept exhaust connection.
   g. Seismic Anchor: Provide seismic anchor for freestanding cabinets and cabinets located below fume hoods designated to be removable for access for persons with disabilities. Seismic anchors may be floor or wall attachments, but shall not attach to adjacent casework or work surfaces. Seismic anchors shall be accessible without removal of laboratory casework, furnishings, or equipment.
8. Flammable Liquid/Solvent Storage Cabinets:
   a. Manufacturers:
      1). Manufacturers of metal laboratory casework.

2). Eagle Manufacturing Company, 2400 Charles St., Wellsburg, WV 26070 Tel: 304 737-3171.
3). Justrite Manufacturing Company, 2454 Dempster St., Suite 300, Des Plaines, IL 60016 Tel: 800 798-9250.
4). Approved substitution/equal.

b. Purpose-designed double-walled metal cabinet for the storage of flammable, combustible and solvent liquids.
c. Cabinet doors: Well-fitting, metal, self-closing and self-latching with fusible lead links and door sequencer.
d. Label: "FLAMMABLE - KEEP FIRE AWAY" in conspicuous silk-screened lettering. Stick-on decals are not acceptable. Size and style of lettering shall match that of the Corrosive Storage Cabinet label. “FLAMMABLE” lettering shall be 2 ½ inches tall. “KEEP FIRE AWAY” lettering shall be 2 inches tall. Color of lettering shall be red. If cabinet color is red, lettering shall be yellow.
e. Locks: Cabinet doors shall be lockable.
f. Floor pan: Provide a 2 inch (50 mm) deep liquid tight pan to cover the entire bottom of the cabinet to contain liquid leaks and spills.
g. Shelves: Provide heavy-duty full-depth metal shelves using pan-type construction to create a liquid-tight containment tray.
h. Casters: Provide cabinets with lockable casters where indicated on the Laboratory Furnishing drawings.
i. Standards:
1). Comply with the requirements of OSHA and NFPA 30.
2). Comply with the requirements of Uniform Fire Code and the International Fire Code with with UL 1275 and FM 6050 labels.
j. Flammable liquid/solvent storage (base) cabinets shall not be vented. Seal vent openings with bungs as provided by manufacturer.
k. Venting of tall cabinets:
1). Remove both metal bungs from cabinet outlets and replace with flash arrestors provided by manufacturer. Connection with 2 inch (50 mm) black iron vent piping to the HVAC systems as shown on LF drawings shall be by Division 23.
2). Vents from multiple cabinets shall not be manifolded prior to connection to the building system.
l. Electrical grounding:
1). Provide each flammable liquid / solvent storage cabinet with an externally mounted grounding conductor screw terminal for up to #8 AWG conductor, mounted at the top of the cabinet.
2). Connection from the equipment grounding bus at the lab branch circuit panel to the storage cabinet terminal shall be by Division 26.
m. Seismic Anchor: Provide seismic anchor for freestanding cabinets and cabinets located below fume hoods designated to be removable for access for persons with disabilities. Seismic anchors may be floor or wall attachments, but shall not attach to adjacent casework or work surfaces. Seismic anchors shall be accessible without removal of laboratory casework, furnishings, or equipment. Anchor attachment shall not void UL listing.

9. Metal Casework Construction Performance: Base cabinets shall be constructed to support a uniformly distributed load of 200 lbs. minimum per square foot (1000 kg/m²) of cabinet top area (total maximum of 2000 lbs. (900 kg)), including working surface without objectionable distortion or interference with door and drawer operation.
a. Base cabinet corner gussets with leveling bolts shall support 500 lbs. (225 kg) per corner, at 1½ inch (38 mm) projection of the leveling bolt below the gusset.
b. Each adjustable and fixed shelf 4 feet (1219 mm) or shorter in length shall support an evenly distributed load of 40 lbs. per square foot (200 kgf/m²) up to a maximum of 200 lbs. (90 kg), with nominal temporary deflection, but no permanent set.
c. Drawer assemblies shall automatically maintain alignment in cabinet opening and shall not bind during opening or closing of the drawer so as to minimize glass breakage and damage to fragile parts.
d. Swinging doors mounted on base units shall support a 250 lb. (113 kg) load located at a test point 14 inches (356 mm) measured horizontally from hinge along the top edge of door through a swing of 180 degrees. Weight test shall allow nominal temporary deflection, but no

permanent distortion. Door assembly shall be twist- resistant and rigid, and shall close in a flat plane against the cabinet to permit the door catch at top of door to function properly.

C. Hardware: As specified elsewhere in this Section.

D. Metal Casework Color: As selected by the Architect from manufacturer's full color line and complying with finish requirements described below.

E. Metal Casework Finish Requirements:

1. Paint finish for steel laboratory products shall utilize a dry coating process with minimal waste generation. Liquid-applied coatings shall not be acceptable. Manufacturer shall supply documentation that waste generated during the painting process, is a solid, non-hazardous material.
   a. Pretreatment: Finish process shall incorporate a phosphate conversion coating during the pretreatment/cleaning operation.
   b. Operator Protection: The painting process shall be cleanly contained, have no solvent odor and be performed in an air-conditioned room.
   c. VOC (Volatile Organic Compounds) emissions shall not exceed 0.29 lbs per gallon (35 g/L).
   d. Offgasing: No further emissions or “Offgasing/Decomposition” vapors shall occur at room temperature from installed finished parts.
2. Preparation: After the units have been completely welded together and before finishing, they shall be given a pre-paint treatment to provide excellent adhesion of the finish to the metal and to aid in the prevention of corrosion. Physical and chemical cleaning of the metal shall be accomplished by washing with an alkaline cleaner, followed by a spray treatment with a heated cleaner/phosphate solution and pretreated with iron phosphate spray followed by a neutral final seal prior to application of final finish. The strength of each solution shall be monitored by filtration to insure consistent quality. All treated parts shall be immediately dried in heated ovens and gradually cooled before application of the finish. Treated metal parts shall be clean and properly prepared to provide optimum adhesion of finish and resistance to corrosion.
3. Application: Electrostatically apply powder coat of selected color and bake in controlled high temperature oven to assure a smooth, hard satin finish. Surfaces shall have a chemical resistant, high grade laboratory furniture quality finish of the following thicknesses:
   a. All surfaces, exterior or interior, exposed to view, shall receive sufficient powder coat to achieve an average 1.5 mil (38 µm) film thickness with a minimum 1.2 mil (30 µm) film thickness and shall have smooth satin luster.
   b. Backs of cabinets and other surfaces not exposed to view shall have sufficient powder coat to achieve an average 1.0 mil (25 µm) film thickness.
4. All drawer bodies to be finished in matching color or in a uniform neutral color.
5. Concealed interior parts shall receive corrosion-resistant treatment.
6. Finish must be UV stable.

F. Metal Finish Performance Requirements:

1. Manufacturer shall submit metal finish performance testing results. Testing to be performed by independent testing agency.
2. Chemical resistance:
   a. Test procedure: Place samples on a flat surface, clean with soap and water and blot dry. Condition the panel for 48-hours at 73+ 3F (23(+ 2(C) and 50+ 5% relative humidity, or the currently accepted guideline set by ASTM. Test the samples for chemical resistance using forty-nine different chemical reagents by one of the following methods. For both methods, leave the reagents on the sample for a period of one hour. Wash off the sample with water, clean with detergent and naptha, and rinse with deionized water. Dry with a towel and evaluate after 24-hours at 73± 3°F (23°± 2°C) and 50± 5% relative humidity, or the currently accepted guideline set by ASTM
      1). Method A: Test volatile chemicals by placing a cotton ball saturated with reagent in the mouth of a 1-oz. (29.574cc) bottle and inverting the bottle on the surface of the sample. The cotton ball shall remain in contact with the sample for the duration of the test.
      2). Method B: Test non-volatile chemicals by placing five drops of the reagent on the surface of the sample and covering with a 24mm watch glass, convex side down.
   b. Rating System: Evaluations shall use the following rating system:

Level 0	No detectable change.

Level 1	Slight change in color or gloss.
Level 2	Slight surface etching or severe staining.
Level 3	Pitting, cratering, swelling, or erosion of coating. Obvious and significant deterioration.

c. Acceptance Level:
   1). Individual test results for the specified 49 reagents shall be within the Range for that reagent as specified on the table below.
   2). There shall be no more than four (4) Level 3 conditions.

d. Table of reagents:

Test No.	Chemical Reagent	Test Method	Range
1.	Acetate, Amyl	A	0-1
2.	Acetate, Ethyl	A	0-2
3.	Acetic Acid, 98%	B	0-3
4.	Acetone	A	0-1
5.	Acid Dichromate, 5%	B	0-1
6.	Alcohol, Butyl	A	0-1
7.	Alcohol, Ethyl	A	0-1
8.	Alcohol, Methyl	A	0-1
9.	Ammonium Hydroxide, 28%	B	0
10.	Benzene	A	0-2
11.	Carbon Tetrachloride	A	0-1
12.	Chloroform	A	0-2
13.	Chromic Acid, 60%	B	0-2
14.	Cresol	A	0-2
15.	Dichloroacetic Acid	A	0-3
16.	Dimethylformamide	A	0-2
17.	Dioxane	A	0-2
18.	Ethyl Ether	A	0-1
19.	Formaldehyde, 37%	A	0-1
20.	Formic Acid, 90%	B	0-3
21.	Furfural	A	0-3
22.	Gasoline	A	0
23.	Hydrofluoric Acid, 37%	B	0-2
24.	Hydrofluoric Acid, 48%	B	0-3
25.	Hydrogen Peroxide, 30%	B	0-1
26.	Iodine, Tincture of	B	0-2
27.	Methyl Ethyl Ketone	A	0-2
28.	Methylene Chloride	A	0-2
29.	Monochlorobenzene	A	0-2
30.	Naphthalene	A	0-1
31.	Nitric Acid, 20%	B	0-1
32.	Nitric Acid, 30%	B	0-1
33.	Nitric Acid, 70%	B	0-3
34.	Phenol, 90%	A	0-2
35.	Phosphoric Acid, 85%	B	0-1
36.	Silver Nitrate Saturated	B	0
37.	Sodium Hydroxide 10%	B	0
38.	Sodium Hydroxide 20%	B	0
39.	Sodium Hydroxide 40%	B	0-1
40.	Sodium Hydroxide Flake	B	0
41.	Sodium Sulfide Saturated	B	0
42.	Sulfuric Acid, 33%	B	0
43.	Sulfuric Acid, 77%	B	0
44.	Sulfuric Acid, 96%	B	2-3
45.	Sulfuric Acid 77% & Nitric Acid 70% equal parts	B	1-3
46.	Toluene	A	0-1
47.	Trichloroethylene	A	0-1

Test No.	Chemical Reagent	Test Method	Range
48.	Xylene	A	0-1
49.	Zinc Chloride, Saturated	B	0

3. Hot Water Test
   a. Test Procedure: 190°F to 205°F (88°C to 96°C) hot water shall be allowed to trickle (with a steady stream and at a rate of not less than 6 ounces (177.5 cc) per minute) on the finished surface, which shall be set at an angle of 45°, for a period of 5 minutes.
   b. Acceptance Level: After cooling and wiping dry, the finish shall show no visible effect from the hot water.
4. Paint Adhesion on Steel Test
   a. Test Procedure: Test shall be based on ASTM D2197-86 “Standard Method of Test for Adhesion of Organic Coating.” Two sets of eleven parallel lines 1/16 inch (1.587 mm) apart shall be cut with a razor blade to intersect at right angles thus forming a grid to 100 squares. The cuts shall be made just deep enough to go through the coating, but not into the substrate. Brush surface lightly with a soft brush for one minute. Examine under 100 fc (1076 lux) of illumination.
   b. Acceptance Level: Ninety or more of the squares shall show finish intact.
5. Impact Test
   a. Test Procedure: Drop a 1 lb (0.4536 kg) ball (approximately 2 inch (50.8 mm) diameter from a distance of 12 inches (305 mm) onto a flat horizontal surface, coated to manufacturer’s standard manufacturing method.
   b. Acceptance Level: No visual evidence to the naked eye of cracks in the finish due to impact.
6. Paint Hardness on Steel Test
   a. Test Procedure: Paint film shall be tested with pencils of various hardnesses. Pencils shall have a wide, sharp edge. Pencils shall be pushed across surface in a chisel-like manner.
   b. Acceptance Level: Finish film shall not rupture from a sharpened 4H pencil.

G. Shop Casework
1. Manufacturers: Products complying with this specification may be provided by the following manufacturers. All products specified in this section shall be the provided by a single manufacturer.
   a. Greene Manufacturing, Inc., 3985 South Fletcher Road, Chelsea, MI 48118 Tel: 800-396-4642. Manufacturer of Dura-Tech product range.
   b. Lista International Corporation, 106 Lowland Street, Holliston, MA 01746-2094 Tel: 800-722-3020.
   c. Approved substitution/equal.
2. Modular Shop Cabinets
   a. Basis of Design: Dura-Tech Modular Technical and Industrial Cabinets, or equivalent.
   b. Cabinet Requirements:
      1). Heavy duty load rated construction.
      2). All welded case and frame construction.
      3). Outer shell is constructed from 16 gauge furniture grade steel utilizing all welded construction.
      4). Bases are equipped standard with a 4” high recessed riser base including floor leveler glides.
      5). Full extension drawer glides rated for a minimum 125 lb up to 400 lb capacity.
      6). Drawer and door facings are full inner and outer headers securely welded together.
      7). All drawer components are formed from 18 gauge furniture grade steel.
      8). Door base cabinets feature an interior adjustable shelf.
      9). Cabinet shells are one piece side, back, and face frame.
      10). Wall cabinets feature all welded construction from 16 and 18 gauge steel and a full face frame with welded seams.
      11). 16 gauge interior shelves.
      12). Hardware:
         a). Provide satin finish stainless steel five-knuckle institutional grade hinges.
         b). Three-point cylinder locks as indicated on drawings and as specified elsewhere in this section.
         c). Pulls shall be stainless steel round “wire” as specified elsewhere in this section.
      13). Work surfaces as specified elsewhere in this section.

2.3 CABINET HARDWARE

A. General: Special cabinets, such as corrosives storage, flammable liquid and solvent storage, rock storage, map storage, museum storage, radioisotope storage, and narcotics lockers, may be provided with the manufacturer's standard hardware.
   1. All door and drawer pulls shall match, regardless of type of casework, except for:
      a. Polypropylene casework. Refer to the pull requirements as specified above.
      b. Flammable liquid/ solvent storage cabinets, which should use manufacturer's standard latch handles as required to satisfy requirements of regulatory approvals.
   2. All hardware shall be compliant with the ADA Standards for Accessible Design (28 CFR Part 36).

B. Drawer and Hinged Door Pulls:
   1. Drawer and door pulls shall attach to door or drawer with machine screws. Two (2) pulls shall be furnished on drawers wider than 28 inches (711 mm). Plastic pulls or other types subject to breakage are not acceptable.
   2. Type: Pulls shall be round "wire."
      a. Material and Finish:
         1). Stainless steel with finish as follows:
            a). BHMA 630 Satin (Previously US32D).
      b. Size:
         1). Length: 4 inches (100 mm) center to center of screw holes.
         2). Diameter: ¼ inch (6 mm).

C. Hinges:
   1. General: Hinges shall be attached to both door and case with three screws through each leaf. Provide two hinges for doors up to 48 inches (1219 mm) high; three hinges for doors over 48 inches (1219 mm) high.
   2. Type: Institutional with a five-knuckle bullet-type barrel. Characteristics:
      a. Height: 2½ inches (63 mm), nominal.
      b. Material: Stainless steel with stainless steel screws.
         1). Finish:
            a). BHMA 630 Satin (Previously US32D).
         2). Manufacturers:
            a). Rockford Process Control, Inc. 202 Seventh St., Rockford, IL 61104 Tel: 815 966-2000.
            b). Approved substitution/equal.

D. Shelf Hardware:
   1. Shelf Supports:
      a. Adjustable shelf supports: Adjustable clear plastic shelf support with lockdown clips.
   2. Manufacturers:
      a. Bainbridge Manufacturing, Inc., P. O. Box 487, 237 W 3rd, Waterville, WA 98858 Tel: 800 255-4702.
      b. The Engineered Products Company (Epco), P. O. Box 108, Flint, MI 48501 Tel: 313 767-2050.
      c. Knape & Vogt Manufacturing CO., 2700 Oak Industrial Dr. NE, Grand Rapids, MI 49505 Tel: 616 459-7620.
      d. Sugatsune America, Inc. 221 East Selandia Lane, Carson, CA 90746 Tel: 310 329-6373.
      e. Approved substitution/equal.

E. Catches:
   1. Roller Catches:
      a. Types and Materials: Roller catches shall be one of the following types. All-plastic or knuckle-type catches are not acceptable, except at corrosive storage cabinets.
         1). Tension ball catches consisting of a case with an adjustable-tension ball catch and a martching strike. Components shall be either stainless steel, chrome plated zinc alloy, or chrome-plated brass.
         2). Nylon roller housed in a steel case, which catches on a steel strike plate. Steel components shall be zinc finished.

3). At metal casework base cupboard, catches may consist of a two-piece heavy-duty cam action positive catch positioned near the pivoting edge of door which provides a clean unobstructed opening. Main body of the catch shall be confined within an integral cabinet divider rail, while latching post shall be mounted on the hinge side of door.
4). At corrosive storage cabinets, catches shall be non-metallic.

b. Application: Provide roller catches at ~~top of~~ all cabinet doors without elbow catches. ***ADD-2***
1). At wall cabinets locate roller catches at top of cabinet door.
2). At tall cabinets (other than skeleton cabinets) locate roller catches to fixed center shelf.
3). At skeleton cabinets locate roller catches at midpoint of door above handle. ***ADD-2***

c. Manufacturers:
1). The Engineered Products Company (Epco), P. O. Box 108, Flint, MI 48501 Tel: 313 767-2050.
2). Sugatsune America, Inc. 221 East Selandia Lane, Carson, CA 90746 Tel: 310 329-6373.
3). Approved substitution/equal.

2. Elbow catches: Heavy-duty, adjustable, spring-type elbow catch and strike plate.
a. Material: Brass or steel with bright chromium plated finish.
b. Application: Elbow catches shall be used on left hand doors of locked double door cabinets, including tall cabinets.
1). At tall cabinets, elbow catch shall latch to fixed center shelf. Latching devices using chains or strings are not acceptable.
c. Manufacturers:
1). The Engineered Products Company (Epco), P. O. Box 108, Flint, MI 48501 Tel: 313 767-2050.
2). Approved substitution/equal.

F. Drawer slides:
1. Typical: Ball bearing slides:
a. Material:
1). Clear, zinc-coated steel.
b. Full extension, 100 lb/pr. (45 kg/pr.) capacity: Accuride 3832, Fulterer FR5000, or equal.
c. File drawers and other drawers noted as having heavy duty slides shall be equipped with rail mounted with overtravel, 150 lb/pr. (68 kg/pr.) capacity: Accuride 4034, Fulterer 5755, or equal.
d. Manufacturers:
1). Accuride, 12311 Shoemaker Ave., Santa Fe Springs, CA 90670 Tel: 562 903-0200.
2). Hettich America LLP, 6225 Shiloh Road, Alpharetta, Georgia 30005 Tel: 770 887-3733.
3). Fulterer USA, 542 Townsend Ave., High Point, NC 27263 Tel: 800 395-4646.
4). Waterloo Furniture Components Inc., 501 Manitou Dr., Kitchener, Ontario, Canada N2C 1L2 Tel: 519 748-5060.
5). Approved substitution/equal.

G. Drawer Stops: All regular drawers shall be equipped with integral stops to prevent drawer head impact with cabinet body.

H. Door Stops: Provide door stops for any cabinet door, which will strike an obstruction when opened between 90° and 135°.
1. Stop to be either:
a. Sash chain, #30 zinc-plated steel.
1). Terminations: Zinc chromate wire screw eyes. Open eye as required to attach stop with screws. Through-bolting not allowed.
b. Coated cable.
1). Seven-strand, 7-wire-per-strand, stainless steel cable with clear nylon coating.
2). Wire diameter: 0.047 inches.
3). Composite diameter with coating: 0.063 inches.
4). Terminations: Number 10 stake eye on both ends. Attach to door/cabinet with screws. Through-bolting not allowed.
5). McMaster Carr part number 30345T3 or equivalent.
2. Engineer stop to length to allow door to open 1 ½ inch (40 mm) from obstruction.

I. Hanging File Suspension System: Hangers shall be fastened and secured to drawer construction and shall not be freestanding units set inside the drawer. Provide in all file drawers.
   1. Basis of Design: Blum Metafile Hanging File Frame Kit.
   2. Manufacturers:
      a. Julius Blum, Inc. 7733 Old Plank Rd., Stanley, NC 28164 Tel: 800 438-6788.
      b. Hettich America L. P., 6225 Shiloh Rd., Alparetta, GA 30005 Tel: 800 438-8424.
      c. Approved substitution/equal.

J. Label holders: Provide label holders, pinned in place. Stick-on holders not acceptable. Label holders shall be provided at all file drawers, and elsewhere as shown on drawings.
   1. Size:
      a. Minimum Size: 1 inch (25mm) x 2 inches (50mm)
      b. Maximum Size: 2 inches (50mm) x 3 ½ inches (90mm)
   2. Material and finish:
      a. Steel with matt chrome finish.
   3. Basis of Design Product:
      a. 704ANO Label Holder by Knape & Voght, 2700 Oak Industrial Drive NE, Grand Rapids, MI 49505 Tel: 800 253-1561.
      b. Approved substitution/equal.

K. Number Plates: Provide 5/8 inch (16 mm) x 1 ¼ inches (32 mm) aluminum number plates with black numbers, pinned in place. Stick-on holders not acceptable. Number plates shall be provided at all drawers where indicated on the plans. Number drawers sequentially in each laboratory as directed by Architect and Owner.

L. Locks:
   1. General: Provide locks on all file cabinet drawers. Provide locks at other locations as indicated on the drawings.
   2. Lock type: Deadbolt-type lock.
      a. Disc-tumbler-type locks and/or cam-type locks will not be accepted.
      b. Framed sliding door locks shall be plunger type.
      c. Refer to Elbow Catches section, above, for requirements at two-swinging-door cabinets.
   3. Testing requirements:
      a. Locks shall comply with ANSI/BHMA standard E07121.
      b. Lock shall be cycle tested per ANSI/BHMA A156.11 Grade 1.
   4. Include spacers, adapters, fasteners, and strikes.
      a. All locks shall strike into metal material. Striking directly into wood is not acceptable.
   5. Barrel length shall be coordinated with specific conditions.
   6. Finish: Locks shall have satin nickel or satin chrome finish.
   7. Coordinate with Laboratory Furnishings plans.
   8. Keying:
      a. Key quantities: Provide two keys per lock. Provide four copies of any master/ grand master keys.
      b. Key system:
         1). Key system shall support a minimum of 2000 different keys.
         2). Key system shall support up to three levels of master keys (grand-master keys, master keys, and sub-master keys) in addition to individual keys.
      c. Key cylinder type:
         1). Coordinate key type with owner.
      d. Key schedule: Coordinate key schedule with Owner.
   9. Key engraving:
      a. Keys to be engraved with an identification number corresponding to the layout of unique keys on the project. All identical keys shall be engraved with the same number.
      b. At laboratories with multiple, individually-locked drawers where number plates are indicated, engrave each key with number to match the number plate on each drawer.
   10. Manufacturers:
      a. Swinging Doors and Drawers:
         1). Illinois Lock Company, 301 West Hintz Rd., Wheeling, IL 60090 Tel: 847 537-1800.
         2). National Cabinet Lock, 200 Old Mill Rd., P. O. Box 200, Mauldin, South Carolina 29662 Tel: 864-297-6655.

3). Olympus Lock, Inc. 18424 Highway 99, Lynnwood, Washington 98037 Tel: 206 362-3290.
4). Approved substitution/equal.

M. Fixed Padlock Eye
1. Stainless-steel fixed padlock-eye and strike plate at cabinet locations as indicated on the drawings. Strike plate, or protection plate, shall be large enough to prevent padlock from damaging door or drawer front.
2. Rotating cam-type padlock hasps are not acceptable and shall not be provided.

N. Glides: Non-marring material, 1 inch (25 mm) diameter, minimum, with at least 5/8 (16 mm) vertical adjustment. Provide on movable tables, unless otherwise indicated.

O. Leveling devices: Provide each table leg with 3/8 inch (10 mm) minimum diameter leveling bolt and floor clip.

P. Leg shoes: Leg shoes shall be provided on all legs and table legs to conceal leveling devices, except for tables with casters. Shoes shall be 2 ½ (63 mm) inch high and of black rubber or pliable black vinyl material. Use of a leg shoe which does not conceal leveling device is not acceptable.

Q. Floor clips: Provide leg assemblies and fixed table legs with floor clips securely fastened to the floor after shimming.

R. Casters: Where indicated on Laboratory Furnishing drawings, provide sets of 3 ½ inch (89 mm) diameter wheels with self-lubricating bearing, rated to carry 250 pounds (113 kg) minimum each. Each caster must swivel and have a locking brake. Wheel shall be of molded polyurethane tread mechanically locked to a polyolefin core.
1. Material: Caster shall be heavy gauge cold rolled steel with bright zinc plating.

S. Support Struts and Service Ledging: Refer to specifications for slotted channel framing in this Section.

2.4 ZOOLOGY AND ORNITHOLOGY SPECIMEN CABINETS

A. Manufacturers: Products complying with this specification may be provided by the following manufacturers. All products specified in this section shall be the provided by a single manufacturer.
1. Lane Science Equipment Corporation, 225 West 34th Street, New York, NY 10122 Tel: 212 563 0663.
2. Viking Metal Cabinet Co., 5321 West 65th Street, Chicago, IL 60638 Tel: 800 776 7767.
3. Delta Design Ltd., P. O. Box 1733, Topeka KS 66601 Tel: 785 234-2244.
4. Approved substitution/equal.

B. Basis of Design: Lane Model 201 stackable zoology and ornithology specimen cabinet, or equal.

C. Size: 46 1/2 inches wide x 28 1/32 inches deep x 42 1/16 inches tall.

D. Cabinet: Single compartment with double wall construction, two lift off double-paneled doors with elastomeric door seals and fumigant compartments, and guides for a maximum of 9 high rim storage trays or 18 low rim storage trays.

E. Trays:
1. Where indicated, provide 9 high rim masonite/aluminum trays, model 201-T, 3 ½ inches high x 42 3/8 inches wide x 26 inches deep.
2. Where indicated, provide 9 high rim powder coated steel trays, model 201-T/S, 3 ½ inches high x 42 3/8 inches wide x 26 inches deep.

F. Provide seismic anchorage suitable for cabinets stacked in configuration shown.

2.5 MAP STORAGE FILE

A. Manufacturers: Products complying with this specification may be provided by the following manufacturers. All products specified in this section shall be the provided by a single manufacturer.
1. Mayline Company, Inc., 619 N. Commerce, P.O. Box 728, Sheboygan, WI 53082 Tel: 414 457-5537.
2. Thermo Fisher Scientific, 1316 18th Street, Two Rivers, WI 54241 Tel: 920 793-1121.

3. Viking Metal Cabinet Co., 5321 West 65th Street, Chicago, IL 60638 Tel: 800 776-7767.
4. Approved substitution/equal.

B. Basis of Design: Stackable, interlocking steel plan files with coated fabric dust covers in each drawer for storing maps up to 24 inches x 36 inches as follows:
1. Flush base: Mayline 7767-W, or equal.
2. Five drawer units: Mayline 7767-D, or equal.
3. Steel cap: Mayline 7767-U, or equal.

2.6 LABORATORY WORK SURFACES

A. Epoxy Resin:
1. Manufacturers: Products complying with this specification may be provided by the following manufacturers.
   a. Durcon Laboratory Tops, Inc., 206 Allison Drive, Taylor, TX 76574 Tel: 512-595-8000.
   b. Epoxyn Products, 500 E. 16th Street, Mountain Home, AR 72653 Tel: 870 425-4321.
   c. Kewaunee Scientific Corporation, P O Box 1842, Statesville, NC 28687 Tel: 704 873-7202.
   d. Prime Industries, Inc., 2600 Warrenville Road, Suite 205, Downers Grove, IL 60515 Tel 630-725-9200
   e. Approved substitution/equal.
2. Thickness:
   a. Typical work surface: 1 inch (25 mm).
   b. Fume hood work surfaces: Tops shall be 1¼ (32 mm) inches thick at outer edge, indented minimum ¼ inch (6 mm) to provide a raised rim around all exposed edges 1 inch (25 mm) wide, minimum, or as to allow for the fume hood sash. The front top edge of the raised rim and exposed vertical corners of the top shall be rounded or chamfered to a 1/8 inch (3 mm) radius. The juncture between the raised rim and the top surface shall be coved or chamfered to a ¼ inch (6 mm) radius.
   c. Curbs and Splashes: ¾ inch (19 mm).
3. Color:
   a. Black.
   b. Color sample to be approved by Architect before work is put in hand.
4. Description:
   a. Monolithic filled epoxy resin work surface consisting of a polymerized cast resin material oven-cured in molds.
   b. Drip Grooves: Provide under all work surface exposed edges, unless noted otherwise on the Laboratory Furnishing Drawings. Drip grooves shall be ½ inch (13 mm) from the front edge where the top overhangs 1 inch (25 mm) and ¼ inch (6 mm) from the edge where the edge overhangs ½ inch (13 mm).
   c. Edge profile: For all exposed upper edges and corners:
      1). Bevel eased: 1/8 inch (3 mm) machined bevel with blended radius corners.
   d. Marine edges: Where indicated on the Laboratory Furnishing Drawings, shall be 1 inch (25 mm) wide and ¼ inch (6 mm) high with chamfered or radiused transition to and be an integral part of the work surface.
   e. Sink Mounting:
      1). Drop-in Sink Cutouts: Cutouts shall be profiled to provide support for the sink, and to ensure that the rim of the installed sink is 1/8 inch (3 mm) below the surrounding work surface level or bottom of drain grooves, if present. The top edge of the cutout shall have 1/8 inch (3 mm) bevel. Ensure that there shall be no gaps between the installed sink rim and work surface.
   f. Curbs and Splashes:
      1). Height: 4 inches (100 mm), unless noted otherwise on Laboratory Furnishing Drawings.
      2). Bonded to the surface of the top to form a square joint.
   g. Provide all holes and cutouts as required for built-in equipment and mechanical and electrical service fixtures. Verify size of opening with actual size of equipment to be used prior to making openings. Form inside corners to a radius of not less than 1/8 inch (3 mm). After sawing, rout and file cutouts to ensure smooth, crack-free edges. Seal exposed edges after cutting with a waterproofing material recommended by the manufacturer.

h. Provide full-length, one-piece tops and backsplashes wherever possible, and keep field joints to an absolute minimum.

5. Physical Properties:
   a. Chemical resistance:
      1). Organic solvents: A cotton ball, saturated with the test chemical, is placed in a one ounce bottle with a reservoir of liquid above the ball. The container is inverted on the test material surface for a period of 24 hours. Test temperature: 23°C ±2°C.
      2). Other test chemicals: Five drops (1/4 cc) of the test chemical are placed on the test material surface. The chemical is covered with a 1 inch diameter watch glass for a period of 24 hours. Test temperature: 23°C ±2°C.
      3). Evaluation: After 24 hours exposure, exposed areas are washed with water, then a detergent solution, finally with naphtha, then rinsed with distilled water, dried with a cloth, and rated as follows:

0	No effect	No detectable change in the material surface.
1	Excellent	Slight detectable change in color or gloss but no change in function or life of the surface.
2	Good	A clearly discernable change in color or gloss but no significant impairment of surface life or function.
3	Fair	Objectionable change in appearance due to discoloration or etch, possibly resulting in deterioration of function over an extended period of time.
4	Failure	Pitting, cratering, or erosion of the surface. Obvious and significant deterioration.

      4). Test results:

Test chemical	Concentration	Black	Dark gray	Light gray	Beige
Chromic acid	40%	3	2	2	2
Hydrochloric acid	10%	0	0	0	0
Hydrochloric acid (conc.)	37%	0	0	0	0
Nitric acid	40%	0	0	0	0
Nitric acid (conc.)	70%	0	0	0	0
Sulfuric acid	60%	0	0	0	0
Sulfuric acid (conc.)	96%	4	4	4	4
Acetic acid	5%	0	0	0	0
Acetic acid (glacial)		0	0	0	0
Citric acid	1%	0	0	0	0
Oleic acid		0	0	0	0
Phenol solution	5%	0	0	0	0
Ammonium hydroxide	10%	0	0	0	0
Sodium carbonate sol.	20%	0	0	0	0
Sodium hydroxide sol.	60%	0	0	0	0
Sodium hypochlorite sol.	4%	0	0	0	0
Acetone		1	1	1	1
Benzene		1	1	1	1
Carbon tetrachloride		1	1	0	0
Diethyl ether		0	0	1	1
Dimethyl formamide		0	0	0	0
Ethyl acetate		0	1	1	0
Ethyl alcohol	95%	0	0	0	0
Ethylene dichloride		0	0	0	0

Test chemical	Concentration	Black	Dark gray	Light gray	Beige
Heptane		0	0	1	0
Isooctane		0	0	0	0
Kerosene		0	0	0	0
Methyl alcohol		0	0	0	0
Toluene		0	0	0	0
Aniline		0	0	0	0
Mineral oil		0	0	0	0
Olive oil		0	0	0	0
Soap solution	1%	0	0	0	0
Transformer oil		0	0	0	0
Turpentine		0	0	0	0

b. Heat resistance:
   1). High temperature test: A porcelain crucible is heated to a dull red color, placed on the test material, and allowed to cool to ambient temperature. Result: No observable surface deformation.
   2). Flame test: A 3/8 inch (10 mm) Bunsen burner is adjusted to a quiet flame with a 1½ inch (38 mm) inner cone, overturned on the test material, and allowed to stay for 5 minutes. Result: no observable surface deformation.

c. Physical properties:

Compressive strength	ASTM D695	31,400 psi (216 MPa)
Tensile strength	ASTM D638	8,000 psi (55 MPa)
Flexural strength	ASTM D790	11,700 psi (81 MPa)
Rockwell hardness “M”	ASTM D785	105-110
Specific density	ASTM D792	122.4 lb/ft^3 (1960 kg/m^3)
Water absorption	ASTM D570	0.01%
Fire Resistance	ASTM D635	ATB (sec)=0
Heat deflection @ 264 psi (1.82 MPa)	ASTM D648	205°F (172°C)

B. Stainless Steel: Refer to Stainless Steel Fabrications section of this specification.

2.7 DOWNDRAFT DISSECTION TABLE WITH HINGED COVER

A. Manufacturers: Products complying with this specification may be provided by the following manufacturers. All products specified in this section shall be the provided by a single manufacturer.
   1. Mopec, 21750 Coolidge Highway, Oak Park, MI 48237 Tel: 800 362-8491.
   2. Thermo Shandon, 171 Industry Drive, Pittsburgh, PA Tel: 800 547-7429.
   3. Mortech Manufacturing Company, 45 La Porte St., Arcadia, CA Tel: 800 410-0100.
   4. Jewett, 275 Aiken Rd., Asheville, NC 28804 Tel: 800 879-7767.
   5. Approved substitution/equal.

B. Basis of Design: Mopec Model HB450-MOD (modified) as specified herein, or equal.

C. Description: Downdraft dissecting table for dissection of cadavers.

D. Product Characteristics:
   1. All 14 gauge (2.0 mm) stainless steel construction, with a #4 satin finish. Sub-frame shall be 12 gauge (2.8 mm) stainless steel.
   2. All inside and outside corners and edges rounded for easy cleaning. Heliarc welded seams and joints, ground and polished to a smooth finish.
   3. Four 1-1/2 inch (38 mm), minimum, tubular legs with adequate cross support. Legs to be manual adjustable height with hand crank operation adjustable from a maximum of 30 inches above finish

floor to a minimum of 36 inches above finished floor. Legs rest on 5 inch (125 mm) diameter casters with swivel locks and wheel brakes.

4. Stainless steel hinged hood, continuously welded, with corner reinforcing strap. Provide continuous stainless steel hinges. Provide latches to lock hood covers open below the table during use and to lock hood close when not in use.
5. Table shall drain toward one end. Drain outlet shall have PVC stop valve. Table shall have means of suspending a drain pail below the drain outlet and stop valve.
6. Work surface shall have perimeter perforations to a plenum below the table. The plenum shall be designed for even airflow and terminate in a single 6 inch (150 mm) diameter duct collar.
7. Clear, 6 inch (150 mm) diameter PVC hose shall be attached to plenum duct collar and shall be attached to exhaust system duct provided by Division 23.
   a. Hose shall be reinforced with white vinyl-covered spring steel wire helix.
   b. Hose shall be abrasion, moisture, corrosion, chemical, and weather-resistant.
   c. Hose wall shall be 0.05 inches (1.3 mm) thick.
   d. Hose shall be UL recognized for flame resistance to UL 94-VO.
   e. Provide metal hose clamp, Mopec “Q-F” or equal, with resilient seal. Provide chain through clamp handle to table leg to prevent loss of hose clamp.
8. Dimensions: 80 inches long x 30 inches wide x 36 inches high (2000 mm x 760 mm x 915 mm high) (to table top).

2.8 SHELVING ASSEMBLIES

A. High-Pressure Decorative (Plastic) Laminate Shelving:

1. Manufacturers/Facing material: Products complying with this specification may be provided by the following manufacturers.
   a. Nevamar Decorative Surfaces, One Nevamar Place, Hampton, SC 29924 Tel: 800 638-4380.
   b. Pionite Decorative Surfaces, One Pionite Road, P.O. Box 1014, Aubern, ME 04211 Tel: 800 746-6483.
   c. Wilsonart International, 2400 Wilson Place, P. O. Box 6110, Temple, TX 76503 Tel: 800 433-3222.
   d. Approved substitution (no known equal).
2. Approved Products:
   a. Nevamar ChemArmor.
   b. Pionite ChemGuard.
   c. Wilsonart ChemSurf
3. Color: To be selected by Architect.
4. Description:
   a. High-pressure decorative laminate, meeting or exceeding NEMA Standard LD3 2005 Grade HGP, HGL, or HGS requirements, consisting of a resin formulation applied over the decorative surface paper to achieve chemical resistance. The decorative paper shall be treated with melamine resin, and the core shall consist of kraft papers impregnated with phenolic resin. Sheets shall be bonded under high temperature and pressure. Product shall be developed for casework, work surface, and shelving surfaces in laboratories.
   b. Laminate shall be applied to top and bottom surfaces.
   c. Finish: Fine pebble-grained “crystal” texture or matte texture with slight sheen to minimize smudges and finger marks, and to provide optimum scratch resistance.
      1). Gloss: 15-16 +/- 3 gloss units.
   d. Physical Properties:
      1). Reference Standard: Plastic laminates shall meet or exceed ANSI/NEMA Specification LD3-2005 as specified herein.
      2). Minimum Thickness: 0.038 inches ± 0.005 inches (0.97 mm ± 0.13 mm).
      3). Cleanability: 10 cycles (NEMA LD3 test method 3.4).
      4). Boiling Water Resistance: No effect (NEMA LD3 test method 3.5).
      5). High Temperature Resistance: Slight effect (NEMA LD3 test method 3.6).
      6). Scratch Resistance: 4.5 Newtons (NEMA LD3 test method 3.7).
      7). Ball Impact Resistance: 60 inches (1524 mm) (NEMA LD3 test method 3.8).
      8). Radiant Heat Resistance: 200 sec (NEMA LD3 test method 3.10).
      9). Dimensional change:
      10). Machine direction: 0.50% (NEMA LD3 test method 3.11).

11). Cross direction: 0.80% (NEMA LD3 test method 3.11).
12). Wear resistance: 1,500 cycles, min. (black); 700 cycles, min. (other colors) (NEMA LD3 test method 3.13).
13). Blister Resistance: 70 sec (NEMA LD3 test method 3.15).
14). Stain Resistance Performance Test Results: The surface shall show essentially no effect on Black (Lab grade) plastic laminate when left in contact for 16 hours either when reagents were kept covered or allowed to evaporate.

0	No effect	No detectable change in the material surface.
1	Excellent	Slight detectable change in color or gloss but no change in function or life of the surface.
2	Good	A clearly discernable change in color or gloss but no significant impairment of surface life or function.
3	Fair	Objectionable change in appearance due to discoloration or etch, possibly resulting in deterioration of function over an extended period of time.
4	Failure	Pitting, cratering, or erosion of the surface. Obvious and significant deterioration.

Acids	Concentration	Rating
Acetic acid	All	0
Aqua regia		0
Chromic trioxide (Chromic acid cleaning solution)		1
Glacial acetic acid	99%	0
Hydrochloric acid	All	0
Hydrofluoric acid	48%	0
Formic acid	All	0
Nitric acid	All	3
Sulfuric acid	All	0
Perchloric acid (concentrated)		0
Phosphoric acid	All	0
Picric acid	1.2%	0
Tannic acid (saturated)		0
Uric acid (saturated)		0

Alkalis		
Ammonium hydroxide	All	0
Sodium hydroxide	All	3
Sodium sulfide	15%	0

Solvents		
Acetone		0
Amyl acetate		0
Amyl alcohol		0
Butyl alcohol		0
Carbon disulfide		0
Carbon tetrachloride		0
Chlorobenzene		0

Solvents		
Chloroform		0
Cresol		0
Dimethylformamide		0
Dioxane		0
EDTA		0
Ethyl acetate		0
Ethyl alcohol		0
Formaldehyde		0
Methanol		0
Methyl ethyl ketone		0
Methylene chloride		0
n-Hexane		0
Naphthalene		0
Phenol		0
Tetrahydrofuran		0
Toluene		0
Trichlorethane		0
Xylene		0

General Reagents		
Alconox (lab detergent)		0
Aluminon		0
Ammonium phosphate		0
Aromatic ammonia		0
Benedicts solution		0
Calcium hypochlorite (concentrated)		0
Camphorated parachlorophenol		1
Cellosolve		0
Copper sulfate		0
Ethylene glycol		0
Eucalyptol		0
Formalin		0
Gasoline		0
Hydrogen peroxide	3%	0
Iodine		0
Karl Fisher Reagent		0
Kerosene		0
Lactated ringers		0
Lysol		0
Methyl methacrylate		0
Mineral Oil		0
Monsel’s solution (Ferric subsulfate)		0
Naphtha		0
Petroleum jelly		0
Phosphate buffered saline (PBS)		0
Pine oil		0
Potassium permanganate		0
Povidone iodine		0
Procaine		0
Quaternary ammonia compounds		0
Silver nitrate		0
Sodium azide		0
Sodium chromate		0
Sodium hypochlorite	5%	0
Sodium thiocyanate		0
Sucrose	50%	0
Thymol & Alcohol		0

General Reagents		
Tincture of Iodine		0
Tincture of Mercurochrome		0
Tincture of Merthiolate		0
Trisodium phosphate	30%	0
Urea		0
Vegetable oils		0
Water		0
Zephiran chloride		0
Zinc chloride		0
Zinc oxide ointment		0

Stains and Indicators		
Ag Eosin Bluish 5% in Alcohol		0
Bromothymol Blue		0
Cresol Red		0
Crystal Violet		0
Gentian Violet	1%	0
Gram Stains		0
Malachite Green		0
Methyl Orange		0
Methyl Red		0
Methylene Blue		0
Nigrosine		0
Safranin O		0
Sudan III		0
Thymol Blue		0
Wright's Blood Stain		0

5. Plastic laminate adhesive: High-pressure decorative laminate shall be bonded to core with thermosetting resorcinol or phenol-resorcinol adhesive, or as recommended by the manufacturer for the application, at temperature above 65°F (18.3°C) at a pressure no less than 15 pounds per square inch. Laminate core is not to exceed 10% moisture content and is to be laminated and cured in a controlled environment between 45% and 60% RH.
6. Core material: Hardwood Veneer Plywood.
   a. Description: A one step calibrated core +/- .5mm (to avoid voids) with type 1 waterproof nauf glue. Grade 2 face, and back of mill choice plywood veneer.
   b. Thickness/Plies:
      1). 1 inch (25 mm): minimum 9-ply.
   c. Physical Properties:
      1). Average modulus of rupture: 7346 psi (50.65 N/mm^2).
      2). Face Screw Holding Strength: 355 lbf (1579 N).
7. Edging:
   a. Unless otherwise indicated, all edges shall be edgebanded with 3 mm PVC edge banding set in hot melt adhesive. Adhesive shall have a minimum softening point of 150°F (65.6°C). Apply primer to substrate when recommended by adhesive manufacturer. Contact cement is not acceptable. Color of edgebanding to be selected by the Architect.
   b. Safety Edges:
      1). Types:
         a). Retainer Rail: ¼ inch (6 mm) diameter stainless steel retainer rail, as indicated on the drawings.
      2). Refer to the description of each system below for locations of each type.

B. Reagent Shelves with Fixed Tubular Supports.
   1. Shelving: High-Pressure Decorative Laminate shelving as specified above.
   2. Shelf supports shall be Type 304 stainless steel tubing, ASTM A312, 1 inch (25 mm) outside diameter, 0.133 inch (3.4 mm) wall thickness, with ¼ inch (6 mm) thick welded steel threaded inserts as shown on drawings.
   3. Fasteners shall be slotted, flat head, zinc screws with bolts as shown on drawings.
   4. Safety edging:

a. Provide safety edging at all four edges of overall installation. Do not provide safety edging at intermediate butt joints.
b. Retainer rail.

5. Load capacity: System shall support a minimum of 25 pounds per square foot. Maximum deflection shall be 0.35 inches (9mm) under load.

C. Reagent Shelves on adjustable shelf standards with a steel tube support system.

1. Shelving: High-Pressure Decorative Laminate shelving as specified above.
2. Steel Frame Support System: Provide cold rolled steel tube vertical and horizontal support members with radiused edges. All members shall be welded together. Grind all welds smooth and polish to produce clean smooth appearance with no visual evidence of welds after paint is applied. All vertical members shall be one piece continuous from floor to underside of structure above or to top horizontal member as indicated on the drawings. Horizontal top and intermediate members shall be one piece between vertical members. Provide welded caps at all open ends of tube sections. Secure vertical members to floor slab, underside of benchtop, if indicated on the drawings, and to underside of structure above.
   a. Tube steel dimensions:
      1). 2 inches x 2 inches, 12 gauge (50 x 50 x 2.8 mm).
3. Shelf standards:
   a. Steel tubes shall be punched to receive adjustable shelf brackets. Pattern shall match Knape & Vogt 85 ANO series uprights, length in accordance with drawings.
4. Shelf Brackets: 16 gauge (1.6 mm thick) bookend type, as detailed on drawings.
5. Safety edging:
   a. Front Edge:
      1). Retainer rail.
   b. Rear edge:
      1). Retainer rail.
6. Load capacity: System shall support a minimum of 35 pounds per square foot applied at all shelves simultaneously. Maximum deflection shall be 0.35 inches (9mm) under load.
7. Finish: Factory-finish steel tube support system, shelf standards, and brackets with epoxy powder coating. Color to be selected by the Architect.

D. Adjustable Wall Shelves:

1. Shelving: High-Pressure Decorative Laminate shelving as specified above.
2. Double Slot Shelf Standards:
   a. Manufacturers: Products complying with this specification may be provided by the following manufacturers. All products specified in this section shall be the provided by a single manufacturer.
      1). Knape & Vogt Manufacturing Company, 2700 Oak Industrial Drive NE, Grand Rapids, MI 49505 Tel: 616 459-3311.
      2). Approved substitution.
   b. Basis of Design: Knape & Vogt 85 ANO series uprights, or equal. Length as indicated on the drawings.
3. Shelf Brackets: 16 gauge (1.6 mm) bookend type, as detailed on drawings.
4. Safety edging:
   a. Front Edge:
      1). Retainer rail.
5. Load capacity: System shall support a minimum of 35 pounds per square foot applied at all shelves simultaneously. Maximum deflection shall be 0.35 inches (9mm) under load.
6. Finish: Factory finish standards and brackets with epoxy powder coating. Color to be selected by the Architect.

E. Heavy Duty Wall Shelves:

1. Shelving: High-Pressure Decorative Laminate shelving as specified above. All shelves to be one piece continuous full length of assembly.
2. Heavy duty shelf standards: Slotted channel framing type. Refer to slotted channel framing specifications elsewhere in this Section.
3. Heavy duty shelf brackets:
   a. Shelf Brackets: Cold-formed steel, slotted channel framing type. Refer to slotted channel framing specifications elsewhere in this Section.

4. Other components, hardware, and fasteners, as required for a complete assembly and as indicated on the drawings.
5. Safety edging, provide at all four edges of each shelf or as indicated:
   a. Retainer rail.
6. Load capacity: System shall support a minimum of 50 pounds per square foot applied at all shelves simultaneously. Maximum deflection shall be 0.35 inches (9mm) under load.

F. Stainless Steel Shelving System

1. Manufacturers: Products complying with this specification may be provided by the following manufacturers. All products specified in this section shall be the provided by a single manufacturer.
   a. InterMetro Industries Corporation, 651 North Washington St., Wilkes-Barre, PA 18705 Tel: 800 992-1776. Manufacturer of Metro product range.
   b. Eagle Group, 100 Industrial Blvd., Clayton, DE 19938 Tel: 302 653-3000.
   c. Nexel Industries Inc., March Equipment Inc., US Highway 206, Box 18, Flanders, NJ 07836 Tel: 973 584-4269.
   d. Approved substitution/equal.
2. Floor Mounted Stainless Steel Shelving Systems
   a. Basis of Design: Metro Super-Erecta stainless steel shelf system, floor mounted post supported, or equivalent.
   b. Posts: floor mounted stainless steel posts, grooved at 1 inch (25 mm) increments and numbered at 2 inch (50 mm) increments for shelf adjustment, length as shown on drawings, Metro PS series or equal.
   c. Shelves:
      1). Open Wire: stainless steel wire.
   d. Provide diagonal bracing for lateral stability at freestanding applications.
   e. Accessories:
      1). Foot Plate: stainless steel with adjustable leveling bolt, Metro No. 9993S or equal.
      2). Post Clamps: Zinc-plated, to join adjacent posts, Metro No. 9994Z or equal.
      3). Shelf Ledges:
         a). 1 inch (25 mm) high stainless steel wire, Metro No. LxxN-1S or equal, sized to match shelf.

2.9 CYLINDER RACKS AND RESTRAINT ASSEMBLIES

A. Cylinder Restraint Assembly:

1. Framing channel, Fittings, Swivel Hangers, and End Caps: Slotted channel framing as specified elsewhere on this Section.
2. Provide two swivel hangers per cylinder or dewar per wall bracket
3. Sizing:
   a. Size typical units to accomodate standard-size laboratory gas cylinders.
   b. Where shown on drawings, size units to accomodate liquefied gas dewars.
4. Chain: Provide restrainers of 5/16 inch diameter, Type 304 stainless steel welded chain fitted with stainless steel snap shackle with swivel clevis and split ring for each bracket; McMaster-Carr Supply Company, Suncor Marine & Industrial, Inc., or approved substitution.
5. Cylinder restraint steel components shall be factory-finished to match the casework metal color as selected for the project.

2.10 OVERHEAD SERVICE CARRIERS

A. Materials:

1. Support Framing: Slotted channel framing as specified elsewhere on this Section.
2. Brake-formed metal: 16 gauge (1.6 mm) galvanized steel with epoxy powder-coated finish.

B. Fabrication: Fabricate and assemble components as detailed on the drawings.

C. Coordination: Carefully coordinate location of supports with the work of other Sections.

D. Finish: As specified for slotted channel framing. Color shall be selected by the Architect.

2.11 OVERHEAD SUPPORT GRID (OVERHEAD UNISTRUT)

A. Product Characteristics: Suspended channel grid, designed to support 200 lb. (0.89 kN) point load at any position and 50 lb./sq. ft. (0.73 kN/m) uniformly distributed load. All brackets, channels, etc. shall be provided for a complete installation.

B. Materials: Slotted channel framing as specified elsewhere on this Section.

C. Fabrication: Fabricate and assemble components as detailed on the drawings.

D. Coordination: Carefully coordinate location of supports with the work of other Sections.

2.12 PIPE DROP ENCLOSURE

A. Fabricate pipe drop enclosures from minimum 18 gauge (1.3 mm thick) cold rolled steel, per details shown on the Laboratory Furnishing drawings, except as noted.

1. Pipe drop enclosures at the following locations shall be fabricated of 18 gauge, Type 304 stainless steel with a #4 finish:
    a. At scullery sinks.
    b. At stainless steel counters.

B. Seal all joints between dissimilar metals and at all panel seams with clear silicone sealant.

C. Materials and finish shall be as specified under Metals Fabrications in this Section.

2.13 DRYING RACK

A. Stainless Steel Drying Rack with White Polypropylene Pegs:

1. Manufacturers: Products complying with this specification may be provided by the following manufacturers. All products specified in this section shall be the provided by a single manufacturer.
    a. Inter Dyne Systems, Inc., 676 Ellis Road, Norton Shores, MI 49441 Tel: 231 799-8760.
    b. Approved substitution (no known equal).
2. Basis of Design: Inter Dyne Systems “V” Victoria Series, modified as indicated on the drawings.
    a. Drying rack bodies shall be of one-piece design and of not less than 20 gauge (1.0 mm thick) Type 304 stainless steel with a No. 4 finish. The top shall have two 90-degree bends, and sides to have one 90 degree bend.
    b. Each rack shall have an integral full-width 20 gauge (1.0 mm thick), Type 304 stainless steel drip trough with stainless steel drain tube. Drip trough shall be continuously welded.
    c. The trough shall have a full-length, Type 304 stainless steel wire mesh screen insert. Screen insert shall be turned down on all four sides to provide a clean and finished appearance.
    d. Each rack front shall be dimensioned and punched with T-shaped holes to accommodate the peg arrangement shown on the drawings.
3. Pegs shall fit into the punched holes in the rack front. A T-shaped protrusion on the base of the pegs shall allow easy removal and replacement without the need for tools. The T-shaped holes shall be designed to fit the protrusion on support pegs for holding single or multiple utensil drip trays, drain shelves, funnel racks or pipette holders. Pegs shall be of injection-molded white polypropylene.
4. Provide wall hangers for each rack, designed to enable the removal and replacement of the entire rack for cleaning without the need for tools.
5. Provide stainless steel fixing screws of appropriate type for attachment to support structure.
6. Provide clear, tight-fitting hose to drain from drip trough drain tube into sink.
7. Provide finished stainless steel back panel when any portion of the back of drying rack is exposed.

2.14 ACCESSORIES

A. Utility Management Hook

1. Type 303 stainless steel hook with polished finish.
2. Size: 4 23/32 inch tall, 2 43/64 inch wide.
3. Load capacity: 22 pounds.
4. Basis of Design Model: McMaster-Carr Model No. 19075A12.

5. Manufacturer: McMaster Carr, P.O. Box 54960, Los Angeles, CA 90054-0960 Tel: (562) 692-5911, or approved equal.

B. Grilles
1. Air intake grilles: Perforated metal mesh in a metal frame.
2. Sizes: As shown on drawings.
3. Mesh Pattern: Mesh 1.
4. Color: Factory-applied light grey paint.
5. Basis of Design Model: Doug Mockett & Co., Inc. GT Series Grilles.
6. Manufacturer: Doug Mockett & Co., Inc. P.O. Box 3333, Manhattan Beach, CA 90266 Tel 800 523-1269 or approved equal.

2.15 FINISH FOR MISCELLANEOUS WOOD ITEMS

A. Applicability: This section applies to wood fabrications, including, but not limited to, wood laboratory tables and wood filler panels.

B. Finish:
1. Manufacturer may uses either of the following finish systems:
a. Customized, high-solids, cross-linked, ultraviolet light (UV)-cured coating developed for durability, including abrasion, chemical, impact, and scratch resistance, for flat-line applications. Coatings shall have little or no VOCs. Chemical-resistant modified acrylic urethane finish with built-in UV blocker, or equal, applied over permanent wood stain.
2. Stain Color:
a. Base Bid: To be selected by Architect from manufacturer's full published color range. ***ADD-2***
b. Alternate Bid: Clear finish. Refer to Section 012300 for additional information. ***ADD-2***
3. Application:
a. Finish application and sequence shall be as recommended and designed by the manufacturer for a high quality, laboratory-grade wood casework finish.
b. Preparation: Sand exposed surfaces smooth, free from dirt and defects.
c. Stain application: Apply stain of color selected to all exposed casework surfaces. Apply in a manner to achieve a match with the selected color sample upon completion of application of the finish.
d. Finish application: Apply top finish to all stained surfaces. Finished surfaces shall be even, water-clear and bright. Cloudy or muddy finishes carrying tinting pigments will not be acceptable.
e. Stain Color:
1). Base Bid: To be selected by Architect from manufacturer's full published color range. ***ADD-2***
2). Alternate Bid: Clear finish. Refer to Section 012300 for additional information. ***ADD-2***

C. Wood Finish Chemical Resistance Performance Requirements:
1. Manufacturer shall submit wood finish chemical resistance performance test results. Testing to be performed by independent testing agency.
2. Procedure: Place panel on a flat surface, clean with soap and water and blot dry. Condition the panel for 48-hours at 73º +/- 3ºF (23º +/- 2ºC) and 50 +/- 5% relative humidity or the currently accepted guideline set by ASTM. Test the panel for chemical resistance using forty-nine different chemical reagents by one of the following methods. For both methods, leave the reagents on the panel for a period of one hour. Wash off the panel with water, clean with detergent and naptha, and rinse with deionized water. Dry with a towel and evaluate after 24-hours at 73º +/- 3ºF (23º +/- 2ºC) and 50 +/- 5% relative humidity, or the currently accepted guideline set by ASTM.
a. Method A: Test volatile chemicals by placing a cotton ball saturated with reagent in the mouth of a 1-oz. (29.574cc) bottle and inverting the bottle on the surface of the panel.
b. Method B: Test non-volatile chemicals by placing five drops of the reagent on the surface of the panel and covering with a 24mm watch glass, concave side down.
3. Rating System: Evaluations shall use the following rating system:

Level 0	No detectable change.
Level 1	Slight change in color or gloss.
Level 2	Slight surface etching or severe staining.

Level 3	Pitting, cratering, swelling, or erosion of coating. Obvious and significant deterioration.

4. Acceptance Level:
   a. Individual test results for the specified 49 reagents shall be within the Range for that reagent as specified on the table below.
   b. There shall be no more than four (4) Level 3 conditions.
5. Table of reagents:

Test No.	Chemical Reagent	Test Method	Range
1.	Acetate, Amyl	A	0-1
2.	Acetate, Ethyl	A	0-1
3.	Acetic Acid, 98%	B	0-1
4.	Acetone	A	0
5.	Acid Dichromate, 5%	B	0-1
6.	Alcohol, Butyl	A	0-1
7.	Alcohol, Ethyl	A	0
8.	Alcohol, Methyl	A	0-1
9.	Ammonium Hydroxide, 28%	B	0-2
10.	Benzene	A	0-1
11.	Carbon Tetrachloride	A	0-1
12.	Chloroform	A	0
13.	Chromic Acid, 60%	B	0-1
14.	Cresol	A	0-2
15.	Dichloroacetic Acid	A	0-3
16.	Dimethylformamide	A	0-2
17.	Dioxane	A	0-1
18.	Ethyl Ether	A	0-1
19.	Formaldehyde, 37%	A	0
20.	Formic Acid, 90%	B	0-1
21.	Furfural	A	0-1
22.	Gasoline	A	0
23.	Hydrofluoric Acid, 37%	B	0-2
24.	Hydrofluoric Acid, 48%	B	0-2
25.	Hydrogen Peroxide, 30%	B	0-1
26.	Iodine, Tincture of	B	0-2
27.	Methyl Ethyl Ketone	A	0
28.	Methylene Chloride	A	0-1
29.	Monochlorobenzene	A	0-1
30.	Naphthalene	A	0
31.	Nitric Acid, 20%	B	0
32.	Nitric Acid, 30%	B	0-2
33.	Nitric Acid, 70%	B	2-3
34.	Phenol, 90%	A	0-2
35.	Phosphoric Acid, 85%	B	0-1
36.	Silver Nitrate Saturated	B	0-1
37.	Sodium Hydroxide 10%	B	0-2
38.	Sodium Hydroxide 20%	B	0-2
39.	Sodium Hydroxide 40%	B	0-2
40.	Sodium Hydroxide Flake	B	0
41.	Sodium Sulfide Saturated	B	0
42.	Sulfuric Acid, 33%	B	0-1
43.	Sulfuric Acid, 77%	B	0-1
44.	Sulfuric Acid, 96%	B	1-3
45.	Sulfuric Acid 77% & Nitric Acid 70% equal parts	B	1-3
46.	Toluene	A	0
47.	Trichloroethylene	A	0
48.	Xylene	A	0
49.	Zinc Chloride, Saturated	B	0

2.16 METAL FABRICATIONS

A. Applicability: This section applies to metal fabrications, including, but not limited to, pipe drop enclosures, shelving support systems, metal-framed laboratory tables, cylinder racks, and other miscellaneous brake-formed and shop fabricated components and trim, such as required for overhead service carriers.

B. Materials:
   1. Steel: Cold-rolled furniture stock sheet steel, prime grade, roller leveled.
      a. Steel shall be treated at the mill to be free of scale, ragged edges, deep scratches, or other injurious effects.
      b. All gauges indicated are to be U.S. standard.

C. Finish Requirements:
   1. Paint finish for steel laboratory products shall utilize a dry coating process with minimal waste generation. Liquid-applied coatings shall not be acceptable. Manufacturer shall supply documentation that waste generated during the painting process, is a solid, non-hazardous material.
      a. Pretreatment: Finish process shall incorporate a phosphate conversion coating during the pretreatment/cleaning operation.
      b. Operator Protection: The painting process shall be cleanly contained, have no solvent odor and be performed in an air-conditioned room.
      c. VOC (Volatile Organic Compounds) emissions shall not exceed 0.29 lbs per gallon (35 g/L).
      d. Offgasing: No further emissions or “Offgasing/Decomposition” vapors shall occur at room temperature from installed finished parts.
   2. Preparation: After the units have been completely welded together and before finishing, they shall be given a pre-paint treatment to provide excellent adhesion of the finish to the metal and to aid in the prevention of corrosion. Physical and chemical cleaning of the metal shall be accomplished by washing with an alkaline cleaner, followed by a spray treatment with a heated cleaner/phosphate solution and pretreated with iron phosphate spray followed by a neutral final seal prior to application of final finish. The strength of each solution shall be monitored by filtration to insure consistent quality. All treated parts shall be immediately dried in heated ovens and gradually cooled before application of the finish. Treated metal parts shall be clean and properly prepared to provide optimum adhesion of finish and resistance to corrosion.
   3. Application: Electrostatically apply powder coat of selected color and bake in controlled high temperature oven to assure a smooth, hard satin finish. Surfaces shall have a chemical resistant, high grade laboratory furniture quality finish of the following thicknesses:
      a. All surfaces, exterior or interior, exposed to view, shall receive sufficient powder coat to achieve an average 1.5 mil (38 µm) film thickness with a minimum 1.2 mil (30 µm) film thickness and shall have smooth satin luster.
      b. Backs of cabinets and other surfaces not exposed to view shall have sufficient powder coat to achieve an average 1.0 mil (25 µm) film thickness.
   4. All drawer bodies to be finished in matching color.
   5. Concealed interior parts shall receive corrosion-resistant treatment.
   6. Finish must be UV stable.
   7. Color: As selected by the Architect.

D. Finish Performance Requirements:
   1. Manufacturer shall submit metal finish performance testing results. Testing to be performed by independent testing agency.
   2. Chemical Resistance:
      a. Test procedure: Place samples on a flat surface, clean with soap and water and blot dry. Condition the panel for 48-hours at 73+ 3F (23(+ 2(C) and 50+ 5% relative humidity, or the currently accepted guideline set by ASTM. Test the samples for chemical resistance using forty-nine different chemical reagents by one of the following methods. For both methods, leave the reagents on the sample for a period of one hour. Wash off the sample with water, clean with detergent and naptha, and rinse with deionized water. Dry with a towel and evaluate after 24-hours at 73± 3°F (23°± 2°C) and 50± 5% relative humidity, or the currently accepted guideline set by ASTM

1). Method A: Test volatile chemicals by placing a cotton ball saturated with reagent in the mouth of a 1-oz. (29.574cc) bottle and inverting the bottle on the surface of the sample. The cotton ball shall remain in contact with the sample for the duration of the test.
2). Method B: Test non-volatile chemicals by placing five drops of the reagent on the surface of the sample and covering with a 24mm watch glass, convex side down.

b. Rating System: Evaluations shall use the following rating system:

Level 0	No detectable change.
Level 1	Slight change in color or gloss.
Level 2	Slight surface etching or severe staining.
Level 3	Pitting, cratering, swelling, or erosion of coating. Obvious and significant deterioration.

c. Acceptance Level:
1). Individual test results for the specified 49 reagents shall be within the Range for that reagent as specified on the table below.
2). There shall be no more than four (4) Level 3 conditions.

d. Table of reagents:

Test No.	Chemical Reagent	Test Method	Range
1.	Acetate, Amyl	A	0-1
2.	Acetate, Ethyl	A	0-2
3.	Acetic Acid, 98%	B	0-3
4.	Acetone	A	0-1
5.	Acid Dichromate, 5%	B	0-1
6.	Alcohol, Butyl	A	0-1
7.	Alcohol, Ethyl	A	0-1
8.	Alcohol, Methyl	A	0-1
9.	Ammonium Hydroxide, 28%	B	0
10.	Benzene	A	0-2
11.	Carbon Tetrachloride	A	0-1
12.	Chloroform	A	0-2
13.	Chromic Acid, 60%	B	0-2
14.	Cresol	A	0-2
15.	Dichloroacetic Acid	A	0-3
16.	Dimethylformamide	A	0-2
17.	Dioxane	A	0-2
18.	Ethyl Ether	A	0-1
19.	Formaldehyde, 37%	A	0-1
20.	Formic Acid, 90%	B	0-3
21.	Furfural	A	0-3
22.	Gasoline	A	0
23.	Hydrofluoric Acid, 37%	B	0-2
24.	Hydrofluoric Acid, 48%	B	0-3
25.	Hydrogen Peroxide, 30%	B	0-1
26.	Iodine, Tincture of	B	0-2
27.	Methyl Ethyl Ketone	A	0-2
28.	Methylene Chloride	A	0-2
29.	Monochlorobenzene	A	0-2
30.	Naphthalene	A	0-1
31.	Nitric Acid, 20%	B	0-1
32.	Nitric Acid, 30%	B	0-1
33.	Nitric Acid, 70%	B	0-3
34.	Phenol, 90%	A	0-2
35.	Phosphoric Acid, 85%	B	0-1
36.	Silver Nitrate Saturated	B	0
37.	Sodium Hydroxide 10%	B	0
38.	Sodium Hydroxide 20%	B	0
39.	Sodium Hydroxide 40%	B	0-1
40.	Sodium Hydroxide Flake	B	0
41.	Sodium Sulfide Saturated	B	0

Test No.	Chemical Reagent	Test Method	Range
42.	Sulfuric Acid, 33%	B	0
43.	Sulfuric Acid, 77%	B	0
44.	Sulfuric Acid, 96%	B	2-3
45.	Sulfuric Acid 77% & Nitric Acid 70% equal parts	B	1-3
46.	Toluene	A	0-1
47.	Trichloroethylene	A	0-1
48.	Xylene	A	0-1
49.	Zinc Chloride, Saturated	B	0

3. Hot Water Test
   a. Test Procedure: 190°F to 205°F (88°C to 96°C) hot water shall be allowed to trickle (with a steady stream and at a rate of not less than 6 ounces (177.5 cc) per minute) on the finished surface, which shall be set at an angle of 45°, for a period of 5 minutes.
   b. Acceptance Level: After cooling and wiping dry, the finish shall show no visible effect from the hot water.
4. Paint Adhesion on Steel Test
   a. Test Procedure: Test shall be based on ASTM D2197-86 “Standard Method of Test for Adhesion of Organic Coating.” Two sets of eleven parallel lines 1/16 inch (1.587 mm) apart shall be cut with a razor blade to intersect at right angles thus forming a grid to 100 squares. The cuts shall be made just deep enough to go through the coating, but not into the substrate. Brush surface lightly with a soft brush for one minute. Examine under 100 fc (1076 lux) of illumination.
   b. Acceptance Level: Ninety or more of the squares shall show finish intact.
5. Impact Test
   a. Test Procedure: Drop a 1 lb (0.4536 kg) ball (approximately 2 inch (50.8 mm) diameter from a distance of 12 inches (305 mm) onto a flat horizontal surface, coated to manufacturer’s standard manufacturing method.
   b. Acceptance Level: No visual evidence to the naked eye of cracks in the finish due to impact.
6. Paint Hardness on Steel Test
   a. Test Procedure: Paint film shall be tested with pencils of various hardnesses. Pencils shall have a wide, sharp edge. Pencils shall be pushed across surface in a chisel-like manner.
   b. Acceptance Level: Finish film shall not rupture from a sharpened 4H pencil.

2.17 STAINLESS STEEL FABRICATIONS

A. Applicability: This section applies to stainless steel fabrications, including, but not limited to, work surfaces, canopy hoods, drying racks, sinks and scullery sinks, stainless steel pipe drop enclosures, and other miscellaneous brake-formed and shop fabricated stainless steel components and trim as shown on the drawings.

B. Manufacturers:
   1. Inter Dyne Systems, Inc., 676 Ellis Road, Norton Shores, MI 49441 Tel: 231 799-8760.
   2. Kloppenberg & Co., 2627 West Oxford Avenue, Englewood, CO 80110 Tel: 303 761-1615.
   3. Approved substitution/equal.

C. Materials and Finishes:
   1. Unless otherwise noted stainless steel shall be Type 304 and shall be of gauge indicated on Laboratory Furnishing drawings or this specification.
   2. All fabrications shall have exposed surfaces ground and polished to a Number 4 satin finish.
   3. All stainless steel nuts, screws, bolts, and rivets, etc., shall be of the same type stainless as in the sheet material and shall have a tumbled finish closely resembling that of a Number 4 finish.
   4. All stainless steel welding material shall be of type similar to the sheet material or a richer quality. All welds shall be made without discoloration and shall be ground, polished, and passivated to blend harmoniously with a Number 4 satin finish. All joints in stainless steel tops and work surfaces shall be welded.

D. Work Surfaces:
   1. Thickness: 16 gauge (1.6 mm).
   2. Fabrication:

a. Edges: Flanged down the same dimension as the adjacent non-stainless top, with 1 inch (25 mm) being a minimum and returned over a perimeter metal frame to simplify securing top material to cabinet or structural frame.
b. Reinforcment: Under-surface shall be reinforced with full length 16 gauge (1.6 mm) structural metal channels as required to insure rigidity and prevent buckling, warping, or oil canning. Where bench-mounted fittings are indicated on the drawings, provide top reinforcement to allow for rigid, secure mounting of fittings.
c. Undercoating: Underside of top shall have a heavy mastic agent coating providing sound deadening.
d. Stainless steel sides and back-splashes, where indicated, shall be integrally welded to top and finish as indicated above. The back side of exposed backsplashes shall be finished to match front and sides.
e. Provide all holes and cutouts as required for built-in equipment and mechanical and electrical service fixtures. Verify size of opening with actual size of equipment to be used prior to making openings. Form inside corners to a radius of not less than 1/8 inch (3 mm). After sawing, rout and file cutouts to ensure smooth, crack-free edges with no burrs.

3. Tops with Sinks: Tops and sinks shall be integral, fabricated with a marine edge and shall be pitched to sink bowl for proper drainage. Marine edges shall be seamless die-formed.
4. Flat Stainless Steel Work Surfaces: (Without marine edge or sink) shall have an integrally coved back splash and bull-nose at front of work surface.
5. Joints: Fabricate work surfaces in the largest sections practical for delivery to the job site. All joints shall be field-welded, ground smooth, and polished on-site to create a continuous work surface.

E. Laboratory Sink: Integral one piece construction with stainless steel work surface.
1. Thickness: 18 gauge (1.3 mm thick), unless otherwise noted.
2. Construction: Sink units shall be designed and fabricated with sufficient reinforcement to prevent oil canning. All sink joints shall be butt-welded, ground smooth by the heliarc welding process. Inside radii shall be 1 inch (25 mm). Bottoms shall be pitched to the drain indent. No soldering will be permitted in connection with sink construction. Sink bowl dimensions given are inside dimensions. Underside shall have a heavy mastic agent coating providing sound deadening.

F. Scullery Sink: Stainless steel top with integral sink bowls in sizes as shown. The requirements for stainless steel tops and sinks described above shall govern in its entirety. Backsplash, marine edge and drain boards shall be provided as indicated in Laboratory Furnishings plans.
1. Thickness: 14 gauge.
2. Construction: Front, bottom and back of sink compartments shall be formed of one sheet of material with integral 1 ½ inch (40 mm) roll rim, extending full length at front and ends of compartments and drainboards. Compartment ends and partitions shall be electrically welded into place. Drainboards shall pitch from 2 inches at rolled rim and ends to 2 ½ inches (65 mm) below rim at compartments. Bottoms shall be pitched to the drain indent. Sink units shall be designed and fabricated with sufficient reinforcement to prevent oil canning. All sink joints shall be butt-welded, ground smooth by the heliarc welding process. Inside radii shall be 1 inch (25 mm). No soldering will be permitted in connection with sink construction. Sink bowl dimensions on drawings are inside dimensions. Underside shall have a heavy mastic agent coating providing sound deadening.
3. Legs: Sinks shall be supported on stainless steel square tube legs with stainless steel leveling guides.
4. Accessories: Provide Elkay LK-86-RT, or approved, waste fitting at each compartment of stainless steel construction with strainer, overflow and lever handle. Provide tailpiece compatible with laboratory waste piping system. Refer to Division 22 for piping requirements.
5. Coordination: Coordinate scullery sink design with the requirements of any undercounter equipment (such as dishwashers and glassware washers), as shown on the Laboratory Furnishings drawings. Provide intermediate, end, and trim panels to enclose the undercounter portions of the scullery sink at equipment locations.

G. Canopy Hood: Provide stainless steel canopy with all hangers and miscellaneous hardware at locations and sizes as indicated on the Laboratory Furnishing drawings.
1. Thickness: 18 gauge.

2. Construction: Provide reinforcing necessary to prevent "oil canning" or deflection of panel between supports. All corners and joints shall be welded, ground smooth and free of all defects. Welded joints with visible burn marks will not be accepted.
3. Accessories: Provide stainless steel hangers and miscellaneous support hardware as required for a complete installation.
4. Provide dust- and vapor-proof light fixture with remote switch.
    a. Manufacturers: Products complying with this specification may be provided by the following manufacturers. All products specified in this section shall be the provided by a single manufacturer.
        1). Canplas Industries Ltd., Barrie, Ontario, Canada L4M 4V3 Tel: 800 461-1771.
        2). Approved substitution/equal.
    b. Basis of Design: Canplas Canlet Series Vaporproof Lighting #6802-FCF-21-00-39.
    c. Construction/Features:
        1). Corrosion-resistant glass reinforced polyester thermoplastic fixture with brass screws and inserts and electrical box for ceiling mounting; U.L. listed for wet locations.
        2). Globe: Prismatic opal polycarbonate with no guard or reflector.
        3). Grounding screw.
        4). Hub-to-hub grounding via an internal bonding frame.
        5). External and internal gaskets for a water-tight seal.
    d. Ballast: Electronic, 120-volt.
    e. Lamp: 26 W compact fluorescent.
    f. Color: Stone Gray.
    g. Install in accordance with the requirements of Division 26.
5. Provide exhaust duct transition piece for mechanical connection above the ceiling designed for 100 cfm/foot (557 m^3/h per meter) of hood length.

2.18 SLOTTED CHANNEL FRAMING

A. Manufacturers: Products complying with this specification may be provided by the following manufacturers. All products specified in this section shall be the provided by a single manufacturer.
    1. Unistrut, 35660 Clinton Street, Wayne, MI 48184 Tel: 800 521-7730.
    2. Power Engineering Co. (Powerstrut), 420 Boston Turnpike, Shrewsbury, MA Tel: 800 274-1303.
    3. Kumar Industries (Nu-Strut), 4881 Chino Ave., Chino, CA 91710 Tel: (909) 591-0722.
    4. Cooper B-Line Inc. (B-Line), 509 West Monroe St., Highland, IL 62249 Tel: (618) 654-2184.
    5. Approved substitution/equal.

B. Materials: Channel and framing members shall be fabricated from steel conforming to the following requirements:
    1. Framing Members:
        a. Concealed Framing Members and Fittings: ASTM A570 GR 33.
        b. Exposed Framing Members and Fittings: ASTM A446 GR A with zinc coating conforming to ASTM A525.
        c. Stainless Steel Framing Members and Fittings: ASTM A240 (Type 304), where indicated.
    2. Fittings:
        a. Concealed Fittings: Fabricate from steel satisfying the requirements of ASTM A570 GR 33, and conform to the following ASTM specifications: A575, A576, A36, or A635. Nuts shall conform to ASTM A576 GR 1015 and screws shall conform to SAE J429 GR 2 and ASTM A307.
        b. Exposed Fittings: Fabricate from steel satisfying the requirements of ASTM A570 GR 33, and conform to the following ASTM specifications: A575, A576, A36, or A635. Nuts shall conform to ASTM A576 GR 1015 and screws shall conform to SAE J429 GR 2 and ASTM A307. Exposed fittings shall receive zinc coating conforming to ASTM A525.
        c. Stainless Steel Fittings and Hardware: Sintered Nuts shall be of ASTM B783 (Type 316N2-33) stainless steel and fittings shall be of ASTM A240 (Type 304) stainless steel. Stainless steel fittings and hardware shall be used with stainless steel framing members, or where indicated.
    3. Thickness: 12 gauge, unless noted otherwise.
    4. Size: 1 5/8 inch x 1 5/8 inch cross-section, unless noted otherwise.

C. Components:

1. The following components shall be provided, unless otherwise noted:
   a. Framing Channel: 1 5/8 inch x 1 5/8 inch x 12 gauge: Unistrut P1000, Powerstrut PS 200, Kumar Industries N-200, B-Line Systems, Inc. B22, or equal.
   b. Suspended Framing Channel, 3 ¼ inch x 1 5/8 inch x 12 gauge: Unistrut P5000, Powerstrut PS 100, Kumar Industries N-150, B-Line Systems, Inc. B11, or equal.
   c. 90° Angle Fitting: 4 1/8 inch x 3½ inch x ¼ inch with two holes, each leg: Unistrut P1325, Powerstrut PS 607, Kumar Industries N-1123, B-Line Systems, Inc. B104, or equal.
   d. 135° Angle Fitting: 3 inch x 2 5/16 inch x ¼ inch with one hole, each leg: Unistrut P1546, Powerstrut PS 633-45°, Kumar Industries N-1425, B-Line Systems, Inc. B154, or equal.
   e. T-Shaped Flat Plate Fitting: 5 3/8 inch x 3½ inch x ¼ inch plate, T-shaped, with four holes: Unistrut P1031, Powerstrut PS 714, Kumar Industries N-1022, B-Line Systems, Inc. B133, or equal.
   f. Wing Shape Fitting, 9 5/32 inch x 3 7/8 inch ten holes, two holes in each wing section and two holes in each of three channel section sides: Unistrut P2347, Powerstrut PS 913, B-Line Systems, Inc. B273.
   g. Vertical Posts: 3¼ inch x 1 5/8 inch x 12 gauge, double channel section: Unistrut P1001, Powerstrut PS 200 2T3, Kumar Industries N-200-A, B-Line Systems, Inc. B22A, or equal.
   h. Horizontal Support Members: 1 5/8 inch x 1 5/8 inch x 12 gauge framing channel with 13/32 inch x 3 inch slotted holes, 4 inches on center: Unistrut P1000 SL, Powerstrut P 200 S, Kumar Industries N-200-SL, B-Line Systems, Inc. B22S, or equal.
   i. Slotted Hole Framing Channel, 1 5/8 inch x 1 5/8 inch x 12 gauge framing channel with 13/32 inch x 3 inch slotted holes, 4 inches on center: Unistrut P1000 SL, Powerstrut P 200 S, Kumar Industries N-200-SL, B-Line Systems, Inc. B22S.
   j. Slotted Framing Channel for installation in Chemical Fume Hoods, 1 5/8 inch x 13/16 inch x 16 gauge Type 316 stainless steel framing channel: Unistrut P4000 SS, Powerstrut PS 560 SS, Kumar Industries, B-Line Systems, Inc.
      1). Attach channel to side of fume hood with 2 5/8 inch x 1 7/8 inch x 1/8 inch, 4 hole, stainless steel 90º fitting: Unistrut P6325 SS, Powerstrut, Kumar Industries, B-Line Systems, Inc.
   k. Diagonal Brace Supports: Framing Channel, 1 5/8 inch x 1 5/8 inch x 12 gauge: Unistrut P1000, Powerstrut PS 200, Kumar Industries N-200, B-Line Systems, Inc. B22, or equa.
   l. Closure Strip: 0.04 inches thick snap-in cover for framing channel: Unistrut P3184, Powerstrut PS 6152, Kumar Industries N-1920, B-Line Systems, Inc. B217-24, or equal. Provide closure strips over all exposed vertical post sections.
   m. End Caps: 0.06 inches thick for framing channel: Unistrut P1280, Powerstrut PS 707, Kumar Industries N-2500, B-Line Systems, Inc. B205, or equal. Provide end caps for all exposed horizontal framing channels.
   n. Ceiling Escutcheon: Provide 18 gauge steel, finished to match framing members, as indicated on the Laboratory Furnishing drawings, at ceiling penetrations.
   o. Other components, hardware, and fasteners, as required for a complete assembly and as indicated on the drawings.
2. Service Struts and Ledging:
   a. 16 gauge, 13/16 inch x 1 5/8 inch cold-formed framing uprights: Unistrut P4000, Powerstrut PS 560, Kumar Industries N-400, B-Line Systems, Inc. B56, or equal. Uprights shall be provided at 48 inches, maximum, and fastened top and bottom by two adjustable U-shaped spreaders.
   b. U-shaped spreaders: 12 gauge by 1½ inch (45 mm) wide by length required, galvanized steel.
   c. Locations:
      1). Provide to support tops at pipe service chase space, support drain troughs, under fume hood superstructures, and other abnormal loads.
      2). Support struts with U-shaped spreaders shall be provided at 48 inches (1220 mm) on center below island and peninsula benches, as indicated on drawings. Support struts shall be provided along wall 48 inches (1220 mm) on center below island and peninsula benches. Struts will be used to support piped and electrical services installed under Divisions 22, 26, and 27. Provide all bolts, expansion sleeves, and fastening devices for a complete assembly. Pipe and conduit hangers shall be provided by Division 22, 26, and 27 installers.
3. Heavy Duty Wall Shelving:

a. Shelf Standards: Framing channel, spaced equally, 36 inches on center, maximum. Secure to wall. Provide all bolts and fastening devices for a complete assembly.
b. Brackets: Cold-formed framing channel brackets, as required for maximum cover of shelf depth:
1). Shelves at least than 9 inches and less than 11 inches deep: Unistrut P1769, Powerstrut PS 732-8, B-Line Systems, Inc. B187, or equal. Secure to steel uprights and underside of shelf with removable bolt fasteners.
2). Shelves at least than 11 inches and less than 13 inches deep: Unistrut P1771, Powerstrut PS 732-10, B-Line Systems, Inc. B541, or equal. Secure to steel uprights and underside of shelf with removable bolt fasteners.
3). Shelves at least 13 inches and less than 15 inches deep: Unistrut P1773, Powerstrut PS 732-12, B-Line Systems, Inc. B289-12, or equal. Secure to steel uprights and underside of shelf with removable bolt fasteners.
4). Shelves at least 15 inches and less than 17 inches deep: Unistrut P1775, Powerstrut PS 732-14, B-Line Systems, Inc. B289-14, or equal. Secure to steel uprights and underside of shelf with removable bolt fasteners.
5). Shelves at least 17 inches and not exceeding 20 inches deep: Unistrut P1777, Powerstrut PS 732-16, B-Line Systems, Inc. B290, or equal. Secure to steel uprights and underside of shelf with removable bolt fasteners.

4. Cylinder and Dewar Restraint:
a. Swivel Hanger: 1 ¾ inch long by 3/8 inch diameter link welded to threaded stud; provide two per cylinder: Unistrut M2350, Powerstrut PS205, Kumar N-2911, B-Line 446B.
5. Overhead Support Grid
a. Exposed horizontal support members for user attachment, 3¼ inch x 1 5/8m inch x ¼ inch framing channel: Unistrut P5000, Powerstrut P 100, Kumar Industries N-150, B-Line Systems, Inc. B11.
6. Finish:
a. Provide finish coating for all cold-formed framing components, except for stainless steel components.
b. Concealed Framing Members and Fittings: Rust inhibiting acrylic enamel paint applied by electrostatic deposition, after cleaning and phosphating, and thoroughly baked. Finish shall withstand a minimum of 400 hours salt spray when tested in accordance with ASTM B117. Color: Green.
c. Exposed Framing Members and Fittings: Factory applied epoxy powder coat. Color: To be selected by the Architect.

2.19 SEALANT

A. Manufacturers: Products complying with this specification may be provided by the following manufacturers.
1. Dow Corning Corporation, P.O. Box 994, Midland, MI 48686 Tel: 989 496-7881.
2. General Electric Company, 260 Hudson River Rd., Waterford, NY 12188 Tel: 800 255-8886.
3. Approved substitution/equal.

B. Basis of Design: Dow Corning 732 Multi-Purpose Sealant, GE Silicones RTV 100 Series, or equal.

C. Characteristics:
1. Type: One-part silicone rubber, MIL-A-46106.
2. Physical form: Non-slumping paste.
3. Cure: Cures at room temperature on exposure to water vapor in the air.
4. Authorizations:
a. FDA Regulation No. 21 CFR 177.2600.
b. USDA Rating P1.
c. NSF Rating C2.
d. UL 150 C Rating, File No. E40195(N).
5. Properties:
a. Tack Free Time: 45 minutes, maximum.
b. Durometer, Shore A Hardness: 20, minimum.
c. Tensile Strength: 220 pounds per square inch, minimum.
d. Elongation: 350 percent, minimum.

e. Extrusion Rate: 220 to 525 grams per minute.

PART 3 EXECUTION

3.1 SITE CONDITIONS

A. Inspection:
   1. Prior to installation of the work of this Section, carefully inspect the installed work specified in other Sections and verify that all such work is complete to the point where this installation may properly commence.
   2. Verify that all work may be installed in complete accordance with the original design, reviewed submittals, and the manufacturer's recommendations.

B. Discrepancy: In the event of discrepancy, immediately notify the Architect.

3.2 INSTALLATION

A. Coordinate work with any Owner furnished and/or installed components indicated on drawings.

B. General: Assemble units into one integral unit with joints flush, tight, and uniform. Align similar adjoining units to a tolerance of 1/16 inch (1.5 mm).

C. Cabinets:
   1. Install cabinets to create a plumb, level, true and straight installation.
   2. Installation of metal and stainless-steel casework fixed cabinets shall utilize the internal leveling devices. Do not use shims.
   3. Installation of wood casework shall be performed using shims. Shimming shall be minimized as much as possible, yet be sufficient to achieve a level and plumb condition.
   4. Installation shall maintain the required height of countertops. ADA-height countertops shall not exceed the heights off the finish floor as indicated.
   5. Where floor conditions require shimming or leveling of more than ¾" at any point, do not install casework in those locations. Notify the contractor and design team that remedial measures will be required to bring the floors closer to a level situation.
   6. Securely fasten wall units to solid supporting material, not plaster, lath, or wallboard. Anchor, adjust, and align wall cabinets as specified for base cabinets. Verify that all required backing and reinforcement necessary to support wall-mounted units is in place, secure, and accurately located.

D. Installation materials:
   1. Installation of wood casework may involve the use of shims, spacers, cleats, straps and other such items of either metal or wood composition.
   2. Installation of metal casework shall use spacers, cleats, and straps of galvanized steel, epoxy-coated steel, or stainless steel. No wood materials of any sort shall be part of the permanent installation of metal casework.

E. Laboratory Tops:
   1. Scribe tops as necessary for close and accurate fit.
   2. Field Joints: Factory-prepared and identical to factory joints, locate only where indicated on approved Shop Drawings. Field processing of top and edge surfaces is not acceptable, except as described by manufacturer in approved Submittal Data. Provide full length, one-piece tops and backsplashes wherever possible, and keep field joints to an absolute minimum.
   3. Abut top and edge surface in one true plane, with internal supports placed to prevent any deflection. Joints in top units shall be flush and the narrowest for the respective materials of construction. Cement joint in accordance with the manufacturers' specifications.
   4. All joints in stainless steel work surfaces shall be field-welded, ground smooth, and polished on-site to create a continuous work surface.

F. Sealant:
   1. Caulk edges of tops, backsplashes and side splashes to adjacent wall or other vertical surface with silicone sealant.

3.3 DESTRUCTIVE TESTING

A. The Owner, Architect, and/or Contractor may, at their own cost, elect to perform destructive testing on casework cabinet components (such as fronts, sides, etc.) to confirm compliance with the requirements of this specification. The casework manufacturer/installer should account for the de-installation, repair, and reinstallation, or replacement of one cabinet that may be selected for destructive testing.

3.4 CLEANING AND PROTECTION

A. Repair or remove and replace defective work as approved by the Architect at no additional cost to the Owner.

B. Clean finished units, touch up as required, and remove and refinish damaged or soiled areas.

C. Cover tops with kraft paper or polyethylene sheeting after installation and all other means necessary for protection against scratching, soiling, and deterioration during remainder of construction period. Remove protection prior to final cleaning.

D. Clean counter tops with diluted dishwashing liquid and water leaving tops free of all grease and streaks. Use no wax or oils.

END OF SECTION

SECTION 115350
LABORATORY EQUIPMENT

Revised, Addendum #2, 09/01/2017

PART 1 GENERAL

1.1 SECTION INCLUDES

A. Laboratory Glassware Washer/Dryers: Base Cabinet Height

B. Laboratory Sterilizers (Autoclaves): Small

C. Procedure Lights (Exam Lights)

1.2 RELATED SECTIONS

A. General and Supplementary Conditions and Division 1

B. Division 23: Mechanical

C. Division 22: Plumbing

D. Division 26: Electrical

1.3 REFERENCES

A. Comply with requirements of general and supplementary conditions and Division 1 as part of this specification.

1.4 DESCRIPTION

A. Furnish and install all laboratory equipment with necessary components and accessories required to ensure a complete installation and ready for intended use as specified herein and shown on the Laboratory Furnishings Drawings.

B. Provide side panels to cover all exposed sides of cabinet-type equipment designed for under-counter installation.

C. Work of this section requires close coordination with work of Division 22, 23 and 26 as well as installation of Owner furnished components and work specified in other Sections. Sequence all work to assure an orderly progress in the project without removal of previously installed work and so as to prevent damage to finishes and products.

1.5 SUBMITTALS

A. Refer to General Conditions and Division 1 “Submittal Procedures” for submittal requirements. In addition to these requirements, provide submittal requirements specified herein.

B. Submittal requirements:

1. Submittal shall be prepared individually for this specification section. Arrange product data, drawings and information for submission in a complete set for this specification section.
2. Submittal shall contain complete data for all items of this specification section. Periodic or partial submittals of individual components within this specification section will be returned as incomplete and rejected.
3. Submittals shall be organized by specification sequence with section and paragraph number identified.
4. Equipment and components being proposed shall be clearly labeled with all options and accessories indicated and shall be for this specific project.

C. Shop Drawings: Submit complete shop fabrication and installation drawings, including plans, elevations, sections, details and schedules. Show relationship to adjoining materials and

construction. Shop Drawings shall be in the form of reproducibles or photocopies, not to exceed 11 inches x 17 inches (A3) in size. Blueline prints are not acceptable.

D. Submit detailed anchorage and attachment drawings and calculations provided by a licensed Structural Engineer to show compliance with the applicable Building Code seismic restraint requirements.

E. Samples: Submit for Architect's approval two (2) samples of each type of specified finish and color range available.

F. Certifications: As a condition of acceptance, submit certification stating that equipment is complete and ready for intended function.

G. Operations/Maintenance Manuals: Accompanying certification, submit for Architect's review and Owner's use, complete operating and maintenance manuals that describe proper operating procedures, maintenance and replacement schedules, components parts list, and closest factory representative for components and service.

1.6 QUALIFICATIONS

A. Contractor for work in this section shall have an established organization and production facilities including all tools, equipment and special machinery necessary for specializing in the fabrication and installation of the type of equipment specified, with skilled personnel, factory trained workmen and an experienced engineering department. Each shall have the demonstrated knowledge, ability and the proven capability to produce the specified equipment of the required quality and the proven capacity to complete an installation of this size and type within the required time limits.

1.7 COORDINATION

A. Work of this Section requires close coordination with Work of Divisions 22, 23 and 26 and Work specified in other Sections. Sequence all Work to ensure an orderly progress in the project without removal of previously installed Work and so as to prevent damage to finishes and products.

1.8 SUBSTITUTIONS

A. Approved Substitution/Approved Equal: In addition to the items required in Division 1, all substitution requests shall include item-by-item comparison of the proposed substitution to this project specification. A copy of the project specification shall be submitted, with each item and subsection of the project specification marked as “Comply” or “Not Comply.” In any cases where “Not Comply” is indicated, an explanation of the relative advantages of the proposed design shall be provided.

B. Substitution shall not affect dimensions shown on Drawings.

C. The Contractor shall pay for changes to the building design, including engineering design, detailing, utility and service requirements, and construction costs caused by the requested substitution.

D. Substitutions shall have no adverse effect on other trades, the construction schedule, or specified warranty requirements.

E. Maintenance and service parts shall be locally available for the proposed substitution.

F. Regulatory: Specified products, materials, or systems for Project may include engineering or on file standards required by the Regulatory Agency. Contractor’s substitution of products, materials or systems may require additional engineering, testing, reviews, approvals, assurances, or other information for compliance with Regulatory Agency requirements or both. Contractor shall provide all Agency approvals or other additional information required and pay additional costs for required Architect’s services made necessary by the substitution at no increase in Contract Sum or schedule time, and as a part of substitution proposal

1.9 PRODUCT HANDLING

A. Protection: Use all means necessary to protect work of this section before, during and after installation including installed work and materials of other trades.

B. Replacement: Any damage as a result of this contractors work will be replaced, repaired and restored to original condition to the approval of the Architect at no additional cost or inconvenience to the Owner.

1.10 WARRANTY

A. Refer to the General Conditions and Division 1 “Product Requirements” for warranty requirements. In addition to these requirements, all products will be warranted to be free from defects in materials and workmanship for a minimum period of one year following substantial completion. The manufacturer/ dealer/ subcontractor shall repair or replace any products (or parts thereof) that are found to be defective. Replacement will include any parts, labor, shipping, and travel expenses involved.

B. Autoclave chambers shall be warranted to be free from defects in materials and workmanship for a minimum period of 15 years ~~following substantial completion~~. ***ADD-2***

PART 2 PRODUCTS

2.1 LABORATORY GLASSWARE WASHER/DRYERS: BASE CABINET HEIGHT

A. Manufacturers/Models: Products, as listed below, which comply with this specification section as judged and approved by the Architect, may be provided by the following manufacturers, listed in alphabetical order:
   1. Labconco Corporation, http://www.labconco.com.
      a. Model: Flaskscrubber
   2. Lancer USA, http://www.lancer.com.
      a. Model: 815LX
   3. Miele Professional, http://www.miele-pro.com.
      a. Model: G7883
   4. Steelco, http://www.steelcospa.com.
      a. Model: Lab500SCL
   5. Approved equal.

B. Description: Microprocessor-controlled laboratory glassware washer/dryer with purified water rinsing and with at least 9 automatic wash programs, capable of accepting optional inserts such as open baskets and spindles/injectors for open or injection cleaning of laboratory glassware on two rack levels.

C. Size:
   1. Minimum Chamber Dimensions: 20½ inches wide x 18½ inches high x 20 inches deep.
   2. Minimum Chamber Volume: 4.5 cubic feet.
   3. Maximum Overall Dimensions: 24¼ inches wide x 34½ inches high x 27½ inches deep.

D. Door Configuration: Bottom-hinged, fold-down door with safety interlock.

E. Product Characteristics:
   1. Construction:
      a. Insulated, fully cabinet-enclosed unit to allow for freestanding or under-counter installation. See Laboratory Furnishing drawings for location.
      b. Chamber and door:
         1). Walls and ceiling, type 304 or 316 stainless steel
         2). Floor and door, type 304 or 316 stainless steel.
      c. Exterior: Type 304 stainless steel.
   2. Control System: Control panel with LCD display to indicate cycle times, temperature, and error messages.
   3. Operation/ Performance:
      a. Dual pump system with separate pumps for circulation and draining.
      b. Rotating upper and lower wash arms.
      c. Circulation pump: rated at a minimum of 92 gpm.
      d. Minimum Heater rating: 2 kW.

e. Wash water temperature: Unit shall be capable of attaining a wash temperature of 199°F (93°C).
f. Final rinse temperature: Unit shall be capable of attaining a final purified water rinse temperature of 199°F (93°C).
g. Easily-removable filter system to catch debris at bottom of the chamber.
h. Drying system: Unit can use any of the following drying systems:
   1). Gravity-convected drying via an electrical heating element.
   2). Drying via an electrical heating element with an internal chamber circulation fan.
   3). Non-filtered fan-driven drying system.
i. Detergents: Unit shall be capable of operating with both detergent and neutralizer. Dispensing shall either be manual or automatic.
j. Noise Level: Unit shall operate at a noise level not exceeding 70 dBA.

F. Utility Requirements:
1. Contractor to coordinate utility requirements with selected manufacturer's installation guide. The utility requirements below are intended to be able to accommodate any of the specified units.
2. Hot water: Minimum incoming temperature: 120°F (49°C). Maximum incoming temperature 158°F (70°C). Input pressure 25 to 120 psig.
3. Cold water: Input pressure 29 to 87 psig.
4. DI rinse water: Input pressure 29 to 60 psig.
5. Electric: 208 V, 60 Hz, single-Phase, 12-40 A. Provide washer with cord and plug to match electrical receptacle.
6. Drain: Connect to sink tailpiece, standpipe, or into adjacent floor sink. Refer to drawings for details. Maximum flow rates: 10.5 gpm.

G. Listing:
1. Unit shall carry an ETL mark signifying certification to UL Standard 3101-1/61010-1 or CAN/CSA C22.2 No. 1010.1.

H. Accessories required:
1. Drain water cool-down kit.
2. Provide an initial set of detergent and neutralizer chemicals, sufficient for a minimum of 50 washes, per unit.
3. Glassware accessories:
   a. Lower rack with a minimum of 19 spindles to provide for injection cleaning for narrow-neck glassware.
   b. Utensil basket(s) of approximately 512 cubic inch capacity with lid/cover(s).

2.2 LABORATORY STERILIZER (AUTOCLAVE): SMALL

A. Manufacturers: Products, which comply with this specification section as judged and approved by the Architect, may be provided by the following manufacturers. All products specified in this section shall be the provided by a single manufacturer.
1. Beta Star Life Science Equipment of R-V Industries, Inc., http://www.rvii.com.
2. Consolidated Sterilizer Systems, http://www.consteril.com.
3. Getinge USA, Inc., http://www.getingeusa.com.
4. Primus Sterilizer Co., Inc., http://www.primus-sterilizer.com.
5. Steris Corporation, http://www.steris.com.
6. Approved equal.

B. Description: Small size steam-jacketed sterilizer designed for use in Laboratory and industrial applications.

C. Chamber Size:
1. 20 inches x 20 inches x 38 inches (508 x 508 x 965 mm) nominal.

D. Door/Mounting Configuration:
1. Single door, cabinet enclosed unit.

E. Process Cycle Configuration:

1. Prevacuum: Prevacuum process shall be designed for fast, efficient sterilization of porous, heat- and moisture-stable materials, sterilization of liquids and media in borosilicate glass containers with vented closures, and decontamination of supplies after laboratory procedures. Prevacuum sterilizer shall be equipped with prevacuum, gravity, liquid, leak test and daily air removal test cycles.

F. Steam Source:
   1. Integral electric carbon steel steam generator supplied with industrial water.

G. Product Characteristics:
   1. Construction:
      a. Shell Assembly: Double wall, jacketed and insulated. Type 316L stainless steel welded sterilizer pressure vessel and type 304L or 316L stainless steel jacket. ASME rated at design operating pressure with allowance to relief valve setpoint - minimum 45 psig (310 kPa). Polished and passivated internal surfaces. Steam supply opening inside chamber to be shielded by a Type 316L stainless steel baffle. Chamber designed for positive sloped drainage with screen drain inlet to prevent debris for entering drain piping.
      b. Door Assembly: Vertical sliding door. Type 316L stainless steel, insulated with jacket. Door suspended by cable/pulley or chain/sprocket supports attached to counterweight or dual-spring assembly. Steam or compressed air activated recessed door gasket seal. Equipped with mechanical safety locking mechanism to prevent door opening when chamber pressure exceeds 2 psi (14 kPa). Provide door safety switch to prevent addition of steam to chamber unless door is closed and locked.
      c. Front Cabinet Panel: Type 304 or 316L stainless steel with No. 4 finish. Hinged or removable for full access to sterilizer piping and control systems.
      d. Side Panels: Sterilizer to be enclosed by Type 304 or 316L stainless steel removable side panels with No. 4 finish. Sterilizer sub-frame to be equipped with a synthetic rubber gasket to ensure tight fit between cabinet panels.
      e. Vacuum System: Water ejector to reduce chamber pressure during prevacuum and post-drying phases.
      f. Plumbing: All valves, fittings, and other plumbing components shall be non-proprietary. Custom manifolds or distribution systems shall not be installed. The piping system shall be designed such that all valve types used are from the same manufacturer for ease of maintenance. All utility piping connections shall terminate within the confines of the sterilizer and to be accessible from the front or access side of the unit. Provide ASME approved pressure relief valves rated for pressure vessels.
      g. Electrical: Electrical components such as switches, relays, and wiring systems shall be non-proprietary. Electrical design and installation shall conform to NEC requirements. Provide appropriate enclosure for components to protect against wet and moist environments.
      h. Floor Stand: Sterilizer to be equipped with a leveling height-adjustable floor stand manufactured of extruded aluminum structural members or welded stainless steel, or welded carbon steel with corrosion protective finish.
   2. Control System:
      a. General: The sterilizer control system shall monitor, control, display, and record all process parameters. The control system shall include a PLC controller, touch-screen operator interface control panel, printer, audible alert, and emergency manual off (EMO) safety switch.
      b. Programmable Logic Controller (PLC) Controller: Non-proprietary controller to display, monitor, and control all sterilizer operations and functions. Allen-Bradley® MicroLogix™ control system or equal.
      c. Touch Screen Operator Interface Control Panel: Color active matrix (TFT) touch sensitive color interface screen. Allen-Bradley® PanelViewPlus™ or equal. Provide one screen on each side of pass-through units.
      d. Printer: Alphanumeric ink-on-paper dot-matrix impact or permanent thermal paper printer with take-up spool.
      e. Programming: All programming to be stored in non-volatile memory to retain programming during a power outage. Provide help menus/screens for programming and troubleshooting alarm conditions. Provide security features to prevent inadvertent or unauthorized process changes. Provide user programmable time-of-day utility startup/shutdown schedules for energy savings.

f. RS-232 or equivalent communication protocol for downloading cycle information.
g. USB or compact flash memory card slot for memory backup/restore and downloading cycle information.

H. Utilities:
1. Electric Steam Generator Unit:
a. Drain: 1½ inch (38 mm) ODT.
b. Generator drain: ½ inch (12.7 mm) ODT.
c. Electrical Controls: 120V, 60 Hz.
d. Electric Steam Generator: 480 V, 60 Hz, 3-phase.
e. Sterilizer feed water: Industrial cold water, 1 inch (25.4 mm) NPT, 30-50 psig (207-345 kPa) dynamic.
f. Compressed Air: ½ inch (38 mm) NPT, 80-100 psig (552-690 kPa).
g. Steam generator feed water: Industrial softened hot water, ½ inch (12.7 mm) NPT, 20-50 psig (138-345 kPa) dynamic.

I. Standards: Units shall conform to the applicable requirements of the following:
1. Underwriters Laboratories (UL).
2. International Plumbing Code.
3. NEC.
4. ASME Code, Section VIII, Division 1 for unfired pressure vessels.
5. ASME Code, Section I, Part PMB for power boilers.

J. Options Required:
1. Drain discharge cool down to limit discharge temperature into waste systems below 140°F.
2. Minimum 12-cycle capacity.
3. Seismic tie-down kit required to conform to local building codes.
4. Auto flush cycle for carbon steel steam generator with programmable timer/controls.
5. Power operated door.
6. Boiler Control and Safety Device (CSD-1) for secondary low water cut-off as required by local jurisdiction.

K. Accessories Required:
1. Rack and shelves.

2.3 PROCEDURE LIGHTS (EXAM LIGHTS)

A. Manufacturers: Products, which comply with this specification section as judged and approved by the Architect, may be provided by the following manufacturers.
1. Burton Medical Products, http://www.burtonmedical.com.
2. Approved equal.

B. Basis of Design: Aim 50
1. High-intensity of 45,000 lux (4181 fc) at 1 meter
2. 3100 K color temperature offers natural and true coloring
3. High CRI (Color Rendering Index) of 96
4. Uses three quartz halogen bulbs – each rated with a 2000-hour bulb life; bulbs wired in parallel for continuous operation
5. Compact 20" (51 cm) diameter lighthead
6. 360° limitless arm-and-mounting-system rotation around vertical axes
7. UL/IEC 60601-1, IEC 60601-1-2, EN/IEC 60601-2-41 and CAN/CSA C22.2 NO. 601.1, M90 certified
8. Required option: removable center sterilizable handle
9. Mounting:
a. Ceiling mounted
1). Single light head
2). Provide drop tube of a length so the lowest fixed part of the assembly is at 82 inches above the finished floor.
b. Seismic design (for ceiling-mounted fixtures)
10. Electric: Hard wired connection.

a. Single light head: 120V, 60Hz

PART 3 EXECUTION

3.1 SITE CONDITIONS

A. Inspection: Prior to installation of laboratory equipment, carefully inspect the installed work specified in other Sections and verify that all such work is complete to the point where this installation may properly commence.

B. Discrepancies: In the event of discrepancy, immediately notify the Architect.

3.2 EXAMINATION

A. Examine surfaces designated to receive work for conditions that would adversely affect the finished work. Repair or replace surfaces not meeting tolerances or quality requirements governing substrate construction prior to start of work.

B. Verify that surfaces, prepared openings, or support structures are ready to receive work.

C. Verify field measurements and opening dimensions are as instructed by manufacturer.

D. Inspect and verify that the required utilities are available, in proper locations, prior to equipment installation.

3.3 WORK REQUIRED OF OTHER SECTIONS PRIOR TO INSTALLATION

A. Install shutoff valves on service lines.

B. Install fused disconnect switches (with lockout in OFF position) in electric supply lines near the equipment.

C. Provide building service lines supplying specified pressures and flow rates.

D. Provide recommended feed water quality for carbon steel steam generators as follows: Total hardness as CaCO3-max 130 mg/l; Total alkalinity as CaCO3-max 180 mg/l; Total dissolved solids-max 250 mg/l; Total Silica-max 2.5 mg/l; pH-6.5 to 8.5.

E. Provide illumination of service area, with provision of convenience outlet for maintenance.

3.4 INSTALLATION

A. General:

1. Install all equipment per manufacturer's recommendations and reviewed submittals.
2. Properly align and position all equipment.

B. Connection to Building Systems: See Laboratory Plumbing and Electrical drawings and Divisions 22 & 23 and 26 for final connections.

3.5 START UP AND TESTING

A. Test, clean, and adjust equipment and apparatus installed to ensure performance meets specified requirements.

B. Operate each unit and test full range of cycles over a continuous period. Record test data.

C. Adjust and re-test any units not meeting requirements.

3.6 DEMONSTRATION AND INSTRUCTIONS

A. Engage services of factory-qualified instructor to instruct and train Owner's operating and maintenance personnel in operation, service, and maintenance of equipment.

B. Test equipment prior to demonstration. Ensure equipment, including specified accessories, is operational.

C. Provide demonstration of equipment operation and instruction of Owner's personnel.

D. Demonstrate operating capability of equipment and systems. Include control and safety features, and service and maintenance procedures.

3.7 CLEANING AND PROTECTION

A. All equipment shall be protected before, during and after installation. Damage to material due to improper protection shall be cause for rejection.

B. Packaging and debris and other waste resulting from installation of equipment will be removed.

C. Repair or remove and replace defective Work as directed by the Architect upon completion of installation.

D. Clean finished equipment, touch up as required and remove and refinish damaged or soiled areas.

E. Prior to final acceptance by the customer, equipment that has become damaged will be repaired or replaced according to the terms of the warranty and any external soiled surfaces will be cleaned.

END OF SECTION

SECTION 123110
STAINLESS STEEL CASEWORK

Issued, Addendum #2, 09/01/2017

PART 1 GENERAL

1.1 SUMMARY

A. Section Includes:
   1. Stainless steel casework, countertops with integral stainless steel sinks (SSCASE-1).
   2. Connections, fasteners, and anchors required for proper attachment of casework and countertops.
   3. Welding of existing relocated countertops to new casework or countertops where indicated.

B. Related Sections:
   1. Section 064000 - Architectural Woodwork.
   2. Division 23 - Mechanical: Service supply, fixtures, fittings and source hookup to equipment.
   3. Division 26 - Electrical: Service supply, plug mold, and source hookup to equipment.

1.2 SUBMITTALS

A. Shop Drawings and Product Data: Submit in accordance with Section 013300.
   1. Provide in large-scale detail, drawings of fabricated casework and countertops showing construction methods, type and gage of metal, hardware and fittings, with plan, front elevation, and minimum of 1 cross-section. Show complicated parts of typical items in cutaway perspective.

B. Maintenance Data: Submit in accordance with Section 017800.

1.3 QUALITY ASSURANCE

A. Manufacturers: Companies specializing in manufacture of casework and countertops of types, and sizes required with minimum 3 years experience.

B. Fabricator's Qualifications: Where indicated units require custom fabrication, provide units fabricated by shop which is skilled and with minimum of 5 years experience in similar work. Where units cannot be fully shop-fabricated, complete fabrication work at project site.
   1. Components shall be compatible with each other and with total assembly for intended service.

1.4 REFERENCES

A. ANSI/AWS D1.1 - Structural Welding Code.

B. ASTM A167 - Stainless and Heat-resisting Chromium-Nickel Steel Plate, Sheet and Strip.

C. ASTM A264 - Stainless Chromium Nickel Steel Clad Plate, Sheet and Strip.

D. ASTM A366 - Steel, Carbon, Cold-Rolled Sheet, Commercial Quality.

E. National Sanitation Foundation, Ann Arbor, Michigan - Standards and Revisions established for custom fabricated items and equipment.

1.5 DELIVERY, STORAGE, AND HANDLING

A. Deliver products to site in manufacturer's protective covering. Store products in accordance with Section 015200.

B. Coordinate size of access and route to place of installation.

PART 2 PRODUCTS

2.1 TYPE AND MANUFACTURER

A. Manufacturer: Custom fabricated items shall be manufactured by one company, which shall be approved by Owner and Architect. Each type of casework and countertop shall have same design and style.

1. Stainless Steel Manufacturer:
   a. Jamestown Metal Products.
   b. Kewaunee Scientific Corporation.
   c. Marquis Custom Stainless Steel by Just Manufacturing (John Hamel Company #835-5570).
   d. Elkay Manufacturing (Bongard Corporation #(651)982-9802).
   e. Or District approved equal.

2.2 MATERIALS

A. Stainless Steel: ASTM A264; Type 304, commercial grade, No. 4.

B. ASTM A167, Type 316 18/8, commercial grade for acid-resistant sinks.

C. Sound Deadening Material: 1/8 inch thick smooth spray coat, #EC-549 by 3M Company.

D. Service Outlet Covers and Escutcheons: Stainless Steel.

E. Fittings and Fixtures: Refer to Division 23.

F. Sealant: SCS 1201 translucent sealant by General Electric. Use where stainless steel meets wall.

2.3 FABRICATION

A. Fabricate casework and countertops assembled and welded, minimum 16-gauge. Fabricate corners and joints, and finish without gaps, or inaccessible spaces or areas where dirt, dust, debris or moisture could accumulate.

B. Stainless Steel Fastenings and Fittings: Bolts and screws with countersunk flat heads at interior and exterior visible or accessible surfaces. Use concealed fastenings where possible.

C. Form edges smooth. Fabricate sheet material for surfaces, casework, countertops, shelves, drainboards, and facings, of straight lengths in one continuous sheet, not over 12 feet in length. Support shelves, racks, and countertops as indicated and specified.

D. Sinks shall be installed in tops as integral part of installation.

E. Reinforce frame and support counters to safely support load of 200 lbs. concentrated on 1 square foot in any area with no indentation showing on surface and with permanent set not exceeding 0.005 inch.

F. Ensure gauges of metal, fabrication and reinforcement are adequate for various conditions and to accepted industry standards. Form edges smooth.

G. Grind welding of stainless steel smooth and flush; polish to match adjacent sheet material finish.

H. Provide cutting and patching of items of this Section required for installation of other services.

I. Cut and drill tops and other elements for service outlets and fixtures.

J. Shop assemble work where possible.

2.4 STAINLESS STEEL

A. Casework, Casework, Countertops and Shelving: Reinforce casework, countertops, shelving and similar surfaces with 16 gauge formed carbon steel channels, spaced as required to maintain flat surfaces under heavy loading. Comply with National Sanitary Foundation (NSF) Standards. Labels not required. Fabricate to eliminate field joints, field weld, grind and polish joints and corners to match finish where required.

1. 1-1/4 inch thick tops with integral backsplash 4 inches high (marine edge), coved corners and sound deadened underside.

2. Cases and cabinets fabricated of the various types and sizes of units into complete assemblies as indicated on drawings. Finish each unit complete at factory. Furnish with finish scribe strips and/or trim molds as required. Neatly attach all scribes and trim.
    a. Case of cabinet units shall consist of a completely welded shell assembly. Form end panels with a front and rear post channel. Form front post in box style with full height reinforcing upright at vertical side where hinge is attached.
    b. Provide cupboard base units with removable backs of 1 or 2 piece construction.
    c. Sink units with lowered formed back rail for clearance for sink.
    d. Wall and tall cases with multiple formed back panels for strength and with a 3/4 inch recess at back of case for mounting purposes.
    e. Case bottoms shall be flush and flat of one piece type construction, with front edge formed into rabbet design. Four embossed holes shall be punched into fixed cupboard bottoms directly over leveling screws. Provide each hole with flush, removable button. Weld fixed bottom to case.
    f. Base on base cabinets shall be integral, 4 (6) inches high for toe space. Leveling screw of minimum 3/8 inch diameter at each corner. Height adjustment shall be made through access holes in toe base.
    g. Doors shall consist of formed inner and outer panels, with outer heads fitting over inner head. Sound insulate or deaden in fire retardant approved manner.

B. Size Components as follows:
    1. 12 gauge: Leveling and corner gussets.
    2. 14 gauge: Drawer runners, sink support.
    3. 16 gauge: Intermediate horizontal rails, table frame, and aprons, cross rails, center posts, top gusset.
    4. 18 gauge: Sides, ends, fixed backs, bottoms, tops, soffits and outer door pans. Bottoms may be 20 gauge if reinforced. Other items not noted.
    5. 20 gauge: Back panels, inner door pans, drawer assembly and shelves. Reinforce or use 18 gauge material for shelves over 36 inches long.

C. Integral Sinks: Cove corners, 1 inch radius, pitch bottoms for drainage, partition between sinks, double wall with round top edge, sound deaden underside. Weld sinks to top.
    1. At sinks provide strainer and 4 inch by 1-1/2 inch O.D. tailpiece with connecting nut.
    2. Provide acid-resistant 18 gauge stainless steel.

D. Hardware:
    1. Hinges to be institutional type with 5 knuckles no less than 2-1/2 inches long, with each leaf drilled for 3 attachment screws.
    2. Pulls to be sized for 4 finger operation.
        1. Door Catches of spring actuated operation with nylon rollers, adjustable for controlled opening action.
    3. Provide hardware in stainless steel or heavy wrought steel with brushed chrome plated finish.

2.5 SERVICE ACCESSORIES AND CONNECTIONS

A. Provide rough-in hardware, supports and connections, attachment devices, fillers, closure trim and accessories.

B. Provide equipment with connection terminals, so that others can make plumbing service connections. Verify connections with mechanical trades.

2.6 FINISHES

A. Stainless Steel: No 4 finish.

PART 3 EXECUTION

3.1 INSPECTION

A. Verify service connections, and supports are correct and in scheduled locations.

B. Beginning of installation means acceptance of existing conditions.

3.2 INSTALLATION

A. Use anchoring devices for materials encountered and usage expected.

B. Install items in accordance with manufacturer's instructions. Set items plumb, square and true, securely anchored to building structure.

C. Insulate to prevent electrolysis between dissimilar metals.

D. Remove and replace equipment creating excessive noise or vibration.

E. Sequence installation and erection to ensure mechanical and connections are achieved in orderly and expeditious manner.

F. Weld joints in stainless steel work tight, without open seams, where necessary due to limitations of sheet sizes or installation requirements.

G. Close ends of units, splash aprons, shelves, by sealing or welding end plates.

H. Cut, fit and patch where necessary. Coordinate work with others.

3.3 ADJUSTING AND CLEANING

A. Clean and adjust equipment and apparatus to ensure proper working order and conditions.

B. Remove masking or protective covering from stainless steel and other finished surfaces. Wash and clean equipment.

END OF SECTION

SECTION 142423
HYDRAULIC ELEVATORS

Revised, Addendum #2, 09/01/2017

PART 1 GENERAL

1.1 SUMMARY

A. Section Includes:
   1. Passenger and Hospital type elevator units.
   2. Guide hoistway rails and brackets, cylinder and plunger.
   3. Drilled hole and casing for cylinder, including concrete fill.
   4. Pit buffers.
   5. Motors, pumps, piping, controls and wiring up to main switch.
   6. Sill angles and pit ladders.
   7. Hoistway beam (if required).

B. Related Sections:
   1. Section 033000 - Cast-in-Place Concrete: Machine Room floor.
   2. Section 096813 – Carpet Tile: Carpet tile flooring in elevators.
   3. Mechanical: Pit drainage.
   4. Electrical: Electrical power to machine room including main switch and breaker.

1.2 REGULATORY REQUIREMENTS

A. Conform to:
   1. ANSI A17.1 - American National Standard Safety Code for Elevators, Dumbwaiters, Escalators, and Moving Walks.
   2. ANSI A17.16 Supplement to Safety Code for Elevators and Escalators.
   3. National Electrical Code.
   4. ANSI A17.2 - American National Standard Practice for Inspection of Elevators, Escalators, and Moving Walks.
   5. Americans with Disability Act (ADA).

B. Welding: AWS D1.1.

1.3 DESCRIPTION

A. Work of this Section includes complete and operational systems for one individual (separated) direct plunger type hydraulic passenger elevator (elevators) with motor and pump at bottom and immediately adjacent to each hoistway as follows:

B. Elevator #1 and #2 Passenger:
   1. Net Capacity: 4000 lbs.
   2. Speed: 150 fpm.
   3. Platform Size: 6’-0” wide by 8’-3” deep.
   4. Travel: As indicated.
   5. No. of Openings: 1 front.
   6. No. of Stops: 5
   7. Entrance Openings Size: 4’-0” wide by 7’-0” high.
   8. Door Operation: Double leaf, side opening horizontal sliding.

C. Elevator Operation:
   1. Simple collective.
   2. Attendant operation (Independent operation) with key lock to remove car from normal hall button calls.
   3. Home landing shall be First floor.
   4. Manual keyed lockdown capability required for all interior and exterior elevators.

D. Fire Emergency Service:
   1. Elevator operation shall comply with requirements of Santa Ana, California.
   2. Fire key shall be kept in suitable emergency box mounted adjacent to elevator.
   3. If smoke or heat sensing devices are wired to elevator system to initiate foregoing operation, install three position key switch, third position to override automatic initiation by sensing device.

1.4 COORDINATION

A. Review Contract Documents for compatibility with products prior to submitting a price. If conflicts are discovered notify Architect in writing. Provide an allowance included in price and identify the allowance as a separate line item to be used for changes to structural, mechanical, electrical, or other systems required to accommodate Provider's equipment.

1.5 SUBMITTALS

A. Samples: Submit in accordance with Section 013300.
   1. Submit samples of finishes and materials required for cars, operating and signal system fixtures and finish of hoistway entrances and doors.

B. Shop Drawings and Product Data: Submit in accordance with Section 013300.
   1. Clearly indicate space requirements, general arrangement of elevator equipment, and material being supplied. Show connections, attachments, reinforcing, anchorage and location of exposed fastenings, and location and amount of loads and reactions to be carried on building structure.
   2. Submit descriptive brochures or detail drawings of landing buttons, hall fixtures, car position indicators and car operating panels, car interior and hoistway doors and frames for review.

C. Maintenance Manuals: Include operations and maintenance instructions, parts listing with sources indicated, recommended parts inventory listing, emergency instructions, and similar information. Include diagnostic and repair information available to manufacturer's and installer's maintenance personnel.

D. Inspection and Acceptance Certificates and Operating Permits: As required by authorities having jurisdiction for normal, unrestricted elevator use.

1.6 MAINTENANCE

A. Maintain entire elevator installation for 12 months after date of Substantial Completion of Work.

B. Include systematic examination, adjustment and lubrication of elevator equipment, repair or replace worn electrical and mechanical parts of elevator equipment using only genuine standard parts produced by manufacturer of equipment concerned.

C. Replace seals, packing, and valves to maintain required factor of safety.

D. Perform work without removing cars during peak traffic periods.

E. Provide 24 hour emergency call back service during maintenance period.

F. Ensure that competent personnel handle maintenance service. Maintain locally adequate stock of parts for replacement or emergency purposes and have qualified personnel available at such places to ensure fulfillment of this service without unreasonable loss of time.

1.7 MAINTENANCE PROPOSAL

A. Proposal for maintenance of installed elevator work for period of 3 years after termination of regular maintenance as required in preceding article.

B. Proposal shall include stipulated sum for above stated time period with premiums due annually.

C. Maintenance shall include requirements stated in preceding article.

1.8 QUALITY ASSURANCE

A. Installer Qualifications: Engage elevator manufacturer or experienced Installer approved by elevator manufacturer who has completed elevator installation similar in material, design, and extent to that indicated for this Project and with record of successful in-service performance.

1.9 DELIVERY AND STORAGE

A. Deliver items or materials to site after area in which they are to be installed is ready to receive them in their place of final installation.

B. Store materials in storage area allotted and in such manner as to prevent deterioration, damage, or loss of their essential properties.

C. Fully protect moveable and operating equipment from weather.

D. Wrap and crate factory finished materials in manner to protect their finishes.

1.10 POWER CHARACTERISTICS

A. Elevator Apparatus: Volt as indicated by Electrical, phase as required, 60 Hz alternating current.

B. Lighting: 120 volt, 60 Hz alternating current.

PART 2 PRODUCTS

2.1 MANUFACTURERS

A. Basis of Design Manufacturer: Hydraulic Elevators by Mitsubishi.

1. Controller: ***ADD-2***
   a. Manufacturers:
      1) Smartrise, http://www.smartrise.us/
      2) Elevator Controls, http://elevatorcontrols.com/index.html
      3) MCE Inc., http://mceinc.com/
   b. Provide non-proprietary, on-board diagnostic controller. Outside tooling to service elevator is not acceptable.

~~2. Non-proprietary controllers by MCE Inc., http://mceinc.com , or District approved equal.~~ ***ADD-2***

3. Warranty: 2 years.

B. Other Acceptable Manufacturers: Mitsubishi, Dover, Oliver & Williams, ~~Otis Elevator Company~~, Schindler Group, ~~ThyssenKrupp,~~ or District approved equal. ***ADD-2***

2.2 MATERIALS

A. Rolled Steel Sections, Shapes, Rods: ANSI A17.1.

B. Sheet Steel: ASTM A446, G90 Coating designation, stretcher levelled commercial grade.

C. Stainless Steel: ASTM A167 Type 302/304, No. 4 finish. Run grain of belting in direction of longest dimension.

D. Aluminum: ASTM B221 extruded alloy; ASTM B209 sheet alloy 6063; enameling quality.

E. Plywood: PS 1, Western Softwood; (Douglas Fir) good one side, fire retardant treated per following requirements:

1. Each piece to bear:
   a. UL FR-S rating (flame spread and smoke developed less than 25),
   b. Complying with extended 30-minute tunnel test, ASTM E84 or UL 723
   c. Meet interior Type A requirements in AWPA Standard C-27 for plywood.
   d. And shall be registered for use as a wood preservative by the U.S. Environmental Protection Agency.
2. Treatment to provide protection against:
   a. Termites.
   b. Fungal decay.
3. Treatment to be free of:

a. Halogens.
b. Sulfates.
c. Ammonium phosphate.
d. Formaldehyde.

4. After treatment: Material shall be dried to an average moisture content of 15 percent or less for plywood and 19 percent or less for other lumber.
5. Coat surfaces cut after treatment with heavy brush coat of same fire-retardant chemical
6. Manufacturers:
   a. Dricon by Arch Wood Products.
   b. Pyro-Guard by Hoover Treated Wood Products.

F. Plastic Laminate: FS L-P-508; color, texture, pattern selected by Architect.

2.3 OPERATING EQUIPMENT

A. Motors, pumps, controllers, hydraulic fluid reservoir, cylinder, casing, plunger, piping, guide rails, buffers, buttons, wiring, indicators, and hardware and fittings to provide fully operational elevator.

1. Pump to be mounted on 1" static deflection spring. ***ADD-2***
2. All hydraulic lines to be installed on neoprene isolators if suspended from the ceiling, or on spring isolators with 0.3" static deflection if floor-mounted.
3. Provide muffler on the discharge oil line.
4. Provide oversized opening in the slab or wall for the oil line penetration through a sleeve filled with some resilient material or firestopping.
5. Elevator cylinder to be mounted on neoprene pads (Mason Industries type Super W, OAE) with 0.1" static deflection.
6. All electrical connections should have flexible conduit connecting to the electrical equipment.

B. Back-up power source: Provide with standby power source unless elevator is shown to be connected to emergency power generator.

C. Manual keyed lockdown capability required for all interior and exterior elevators.

2.4 FINISHES

A. Primer: Shop coat, (zinc dust/zinc oxide) alkyd.

B. Galvanizing: ASTM A526, G90 coating designation.

C. Enamel: Shop applied baked enamel of colors selected by Architect.

D. Corrosion Protection: Corrosive resistant paint and covering wrap as recommended by elevator manufacturer for specific soil conditions at site.

2.5 FABRICATION

A. Machine: A.C. type specifically designed for elevator service having motor, pump, tank valves and muffler mounted and aligned on steel bedplate.

B. Cylinder/Plunger: Machined polished steel tube having internal couplings where jointed, welded stop on bottom, sliding in high strength steel pipe cylinder having closed bottom and stuffing box with packing gland at top and necessary piping connections.

C. Car: Sheet steel enclosure with structural steel frame and bracing, 3/4 inch fire retardant treated plywood floor and wall cladding fastened with hidden mechanical fasteners. Power operated hollow steel doors with track, rollers and frame.

D. Car Finish: Color and finishes as selected by Architect from manufacturer's standard finishes. Provide cab with swing return front.

E. Hoistway Entrances: Baked enamel finish on steel.

2.6 FINISHING

A. Non-exposed to View Surfaces:

1. Structural and Non-exposed Ferrous Metal Surfaces: Free surfaces of rust, oil or grease, clean with solvent, prime with 2 coats structural steel grade primer.
2. Field Welds: Chip and clean away oxidation, flux or residue, wire brush clean, apply 2 coats of primer.
3. Wood: One coat primer and 2 coats semi-gloss alkyd enamel.

B. Exposed to View Surfaces (in car, machine room and hoistway entrances).
1. Stainless Steel: Type 302/304 No. 4 finish.
2. Plastic Laminate: Wood grained or solid color furniture finish, 0.060 inch thick, pattern and color as selected from manufacturer's standard range.
3. Baked Enamel: Clean, degrease zinc coated metal surface, one coat of zinc oxide primer sprayed and baked, 2 coats of semi-gloss enamel sprayed and baked, color as selected from manufacturer's standard range.

PART 3 EXECUTION

3.1 PREPARATION

A. Examine work of other trades on which work of this Section depends. Report defects to Architect in writing which may affect Work of this trade or equipment operation.

B. Ensure that shafts and openings for moving equipment are plumb, level and in line and that pit is to proper depth, waterproofed and drained with necessary access doors, cylinder opening, ladder, guard.

C. Ensure that machine room is properly illuminated, heated and ventilated and equipment foundations correctly located complete with floor and access door.

D. Before fabrication, take necessary job site measurements and verify where work is governed by other trades. Check measurements of space for equipment and means of access for installation and operation. Obtain dimensions from site for preparation of shop drawings.

E. Ensure following preparatory work, provided under other Sections has been properly completed to receive elevator work:
1. Supply of electric feeder wires to terminals of elevator control panel, including fused main line switch or circuit breaker. Provision of hoistway outlets for car light, and for light in pit and outlets in machine room for light. Furnishing of electric power for testing and adjusting elevator equipment.
2. Provision of hoistway outlet for telephone.
3. Supply of power for emergency cab lighting and ventilation from power panel specified in Division 26 Electrical fed by building emergency circuits.
4. Machine room enclosed and protected from moisture, with lockable door.

F. Supply in ample time for installation, inserts, anchors, pipe sleeves, bearing plates, brackets, supports and bracing including setting templates and diagrams for placement.

3.2 INSTALLATION

A. Perform work with competent mechanics skilled in this work and under direct control and supervision of elevator manufacturer's experienced foreman.

B. Set hoistway entrances in alignment with car openings and true with plumb sill lines.

C. Install machinery, guides, controls, car and equipment and accessories in accordance with manufacturer's instructions, applicable codes, and standards to provide quiet, smoothly operating installation, free from sidesway, oscillation, or vibration.

D. Excavate for plunger and cylinder, set in place plumb and accurate and enclose with 3000 psi concrete.

E. Mount machine immediately adjacent to hoistway on concrete foundation provided under Section 033000 - Cast-in-Place Concrete. Isolate and dampen machine vibration with properly sized sound reducing anti-vibration pads.

F. Install and hookup piping between machine and cylinder.

G. Erect hoistway sills, headers and frames prior to erection of rough walls and doors; erect fascias and toe guards after rough walls finished.

H. Grout sills and hoistway entrance doors.

I. Provide stainless steel license holders in each elevator car to suit certificate issued. Design holder with nonvisible tamperproof fastenings.

J. Provide wall hooks and protective mats for walls of elevator car No. 2.

K. Locate hall buttons and indicators as detailed on Drawings.

3.3 CLEANING

A. Prior to final acceptance remove protection from finished or ornamental surfaces and clean and polish surfaces with due regard to type of material.

B. At completion of work of this Section, remove tools, equipment and surplus materials from site.

3.4 ADJUST AND BALANCE

A. Make necessary adjustments of equipment to ensure elevator operates smoothly and accurately.

3.5 PROTECTION

A. Locate and protect moveable equipment and controls in such way that they can only be operated by authorized persons.

3.6 INSPECTION

A. Obtain and pay for inspections and permits and make such tests as are required by regulations of authorities. Make tests in presence of Architect.

B. Final inspection shall be after elevator installation, hoisting enclosure and machine room are complete.

C. Inspect installation in accordance with ANSI A17.2.

D. Deliver test certificates and permits to Architect.

3.7 INSTRUCTION AND MAINTENANCE

A. Instruct Owner's personnel in proper use, operation and daily maintenance of elevators. Review emergency provisions, including emergency access and procedures to be followed at time of failure in operation and other building emergencies. Train Owner's personnel in normal procedures to be followed in checking for sources of operational failures or malfunctions. Confer with Owner on requirements for complete elevator maintenance program.

B. Make final check of each elevator operation, with Owner's personnel present and just prior to date of substantial completion. Determine that control systems and operating devices are functioning properly.

END OF SECTION

SECTION 263210
AUTOMATIC TRANSFER SWITCH

Revised, Addendum #2, 09/01/2017

PART 1 GENERAL

1.1 SCOPE

A. Work Included: All labor, materials, appliances tools, equipment, facilities transportation and services necessary for and incidental to performing all operations in connection with furnishing, delivery and installation of the work of this Section, complete as shown on the Drawings and/or specified herein. Work includes, but is not limited to the following:
   1. Examine all other Sections for work related to those other Sections and required to be included as work under this Section.
   2. General provisions and requirements for electrical work.

B. Emergency Electrical System Operation:
   1. Automatic Transfer Switch - ATS unit(s) in combination with the respective engine generator(s) shall automatically detect and respond to normal source and emergency source electrical system power anomalies and disruptions.
   2. When normal source anomalies or disruptions are detected by ATS unit(s), the engine generator(s) shall automatically start-and-run, subsequently the ATS unit(s) shall automatically transfer the connected (load-add) to the generator(s).
   3. Load-shed and load-add functions shall all be based on assigned emergency load priorities. ATS sequential operations based on load priority assignments.
   4. Total start-run-load-add sequence time shall not exceed 10-seconds for priority #1 life safety emergency electrical loads, after detection of normal source anomalies or disruptions. Total start-run-load-add sequence time shall not exceed 60-seconds for non-life safety emergency electrical loads, after detection of normal source anomalies or disruptions.

1.2 SUBMITTALS (ADDITIONAL REQUIREMENTS)

A. Submit Product Data Sheets for all switches, relays, controllers, power supplies, cabinets, etc.

B. Submit Detailed Shop Drawings including Dimensioned Plans, Elevations, Details, Schematic and Point-To-Point Wiring Diagrams and descriptive literature for all component parts and cabinets.

C. Submit Worst Case Voltage Drop Calculations on control circuits.

D. Quality Control Additional Requirements
   1. General
      The equipment shall be listed, labeled and approved for the application shown in the Contract Documents, as Building Code mandated, emergency electrical power supply equipment, complying with the most recent version of the install requirements of the following applicable Standards. The following Standards shall become Requirements of and are included in the Contract Documents:
   2. Underwriters Laboratory – UL
      a. UL – 1008 Standards for Transfer Switch Equipment.
      b. UL – 508 Industrial Control Equipment
   3. National Fire Protection Agency – NFPA
      a. NFPA – 70 National Electrical Code.
      b. NFPA – 99 Essential Electrical Systems.
      c. NFPA – 101 Emergency and Standby Power Systems.
   4. National Electrical Equipment Manufacturer's – NEMA
      a. NEMA – ICS-10 AC Automatic Transfer Switches.
   5. Institute of Electrical and Electronic Engineers – IEEE
      a. IEEE – 446 Recommended Practices for Emergency and Stand by Power Systems for Commercial and Industrial Applications.

6. International Electro-Technical Commission - IEC
    a. IEC-947.6.1 Low Voltage switchgear and Control gear; Multifunction Equipment; Automatic Transfer Switching Equipment.

E. Short Circuit, Coordination and Arc-Flash (Additional Requirements)
1. Perform and submit engineered settings for each Automatic transfer Switch assembly equipment location, showing the correct time and current settings to provide the selective coordination within the limits of the specified equipment, per the latest applicable standards of IEEE and ANSI. Provide electrical system short circuit fault analysis, both 3-phase line-to-line and 1-phase line-to-ground calculations as part of the Coordination Analysis recommendations. Provide Electric Arc-Flash calculations as part of the Coordination Analysis recommendations.
2. The information shall be submitted in both tabular form and on time current log-log graph paper, with an Engineering Narrative. Written narrative describing data, assumptions, analysis of results and prioritized recommendations, six copies.
3. The goal is to minimize an unexpected but necessary electrical system outage and Personnel exposure to the smallest extent possible within the fault occurrence location, using the specified Contract Equipment. Shall comply with, but not limited to:
    a. IEEE-242, Recommended Practices for Protection and Coordination of Industrial and Commercial Distribution.
    b. IEEE-399, Recommended Practice for Industrial and Commercial Power System Analysis.
    c. IEEE-1584, Guide to Performing ARC-Flash Hazard Study.
    d. CEC/NEC
4. Automatic Transfer Switch equipment shall each be labeled by the Manufacturer with “Electric-Arc-Flash” warning signs. The signs shall explain a hazard to personnel may exist if the equipment is worked on while energized or operated by personnel while energized. The sign shall instruct personnel to wear the correct Protective Equipment/clothing (PPE) when working “Live”, or operating “Live” electrical equipment and circuits.

F. Seismic Earthquake and Wind Loading Withstand, Testing and Certification (Additional Requirements)
1. The complete Automatic Transfer Switch assembly; including circuit protection devices, meter, housings/enclosures, transfer mechanisms, accessories, supports/anchors etc., shall be designed, manufactured and tested.
    a. Wind loading all outdoor equipment locations.
    b. Earthquake Seismic Zone and CBC/IBC Seismic Withstand, all indoor and all outdoor equipment locations.
2. Shall withstand, survive and maintain continuous non-interrupted energized operation during the seismic event occurrences and wind event occurrences. Continued normal energized operation after the wind event and seismic event occurrences have abated.
3. Shall include demonstrations of successful operation and transfer test after completion of seismic event shake-table simulation. Acceptance test seismic qualification of proposed ATS equipment shall employ triple axis shake-table simulation of the Required Response Spectrum (RRS) seismic event motion, certified and approved by the AHJ.
4. Provide three dimensional finite element analysis demonstrating anchorage and operational withstand of wind loading not less than as follows and as required by AHJ:
    a. 100MPH-West Coast States USA and Hawaii.
    b. 150MPH-East Coast States USA, Gulf Coast States USA and Alaska State.
    c. 90MPH-all other USA locations.
5. Seismic test shall be performed by a third party independent Test Laboratory. Wind Analysis and Seismic Testing and Reports shall be certified, signed and “Stamped” by PE Professional Engineer licensed and in good standing in the State, Civil Engineer or Structural Engineer.

PART 2 PRODUCTS

2.1 TRANSFER SWITCH MECHANISM

A. General

1. Provide Automatic Transfer Switch ~~with bypass/isolation switch~~ (ATS) system, with quantity of poles, amperage, voltage and withstand ratings as shown on the Plans. The system shall be the product of one Manufacturer. ***ADD-2***
2. The ATS shall be rated for all classes of loads including 100% tungsten filament lamp loads, electric induction motor loads and solid state switching power supply loads.
3. As manufactured by ASCO; or Russell; or Zenith controls.

B. Operation

1. Electrical operation shall be accomplished by a momentarily energized single direct operating mechanism, which receives power from the source to which the load is being transferred. Fuse or thermal protection of the main operation shall not be required to ensure compliance and/or correct operation. The total operating transfer time shall not exceed one-sixth of a second (10Hz). Mechanical locking in each position shall be accomplished without the aid of springs, latching solenoids, gear mechanisms or motor operators.
2. Operation shall be inherently double-throw where all contacts move simultaneously and with no programmed delay in a mid-position. Electrical spacing shall not be less than those listed in Table 15.1 of UL Std. #1008. Main contact structures not originally manufactured for transfer switch service are not acceptable. An overload or short circuit shall not cause the switch to go to a neutral position.
3. Inspection and replacement of all main and arcing contacts (moveable and stationary) shall be possible from the front of the switch without disassembly of operating linkages and without disconnection of power conductors.
4. A UL listed manual operating handle shall be provided for maintenance purposes. The handle shall permit the operator to stop the contacts at any point throughout the entire travel including points of contact make and break.
5. ATS shall be 4-pole Phase-A, Phase-B, Phase-C plus switched neutrals, with fully rated neutral transfer contacts which momentarily (100 milliseconds, maximum) interconnect the neutrals of the sources during the transfer/retransfer operation. The neutrals shall remain interconnected through the main contacts until the phase contacts close on the alternate source. Phase and neutral contacts shall be driven by one single main operator.

2.2 CONTROL PANEL

A. General

A separately mounted logic panel with solid state sensing and timing functions shall provide the following operational characteristics:

1. Time delay on momentary dips in normal source (adjustable 0.5-6.0 seconds), set at 1.0 seconds.
2. Time delay on transfer to emergency for controlled loading of generator (0-5 minutes adjustable 0 to 300 seconds. Set at 0 seconds for each ATS supplying Building Code mandated emergency electrical loads. Set at 15-second sequential additional incremental intervals for each additional ATS supplying electrical loads that are not mandated for emergency standby power source by Building Code regulations.
3. Time delay on retransfer to normal after restoration of normal source (adjustable 0-30 minutes), set at 15 minutes.
4. Selector switch to manually bypass time delay on retransfers.
5. Time delay on engine shutdown (engine cool down) after retransfer to normal (adjustable 0-15 minutes), set at 5 minutes.
6. Close differential voltage sensing of all normal source phases (adjustable pick-up 85-100 percent of nominal and drop out 75% - 98% of pick-up), set at 85% drop out and 95 percent pickup.
7. Independent voltage (adjustable 85% - 100% pick-up) and frequency (adjustable 90% - 100% pick- up) sensing of the emergency source to prevent premature transfer, set at 90 percent voltage and 95% frequency.

8. Test switch for both test with load and test without load (momentary type).
9. Gold plated 10-amp engine-starting contacts (1-N.C. and 1-N.O.) rated 120 volt AC or D.C.
10. Visual annunciators to indicate ATS connection position (white on normal, yellow on emergency, red for common trouble.
11. Auxiliary contacts each D.P.D.T. (one relay to operate on normal "N" and one relay to operate on emergency “E”) rated 10 ampere 480 VAC.
12. An in-phase monitor shall be provided to control transfer/retransfer operation between live sources so that closure on the alternate source will occur only when the two sources are approaching synchronism and at the instant when the two sources are within plus/minus 60 electrical degrees, max. The monitor shall function over a frequency difference range of plus/ minus 2Hz minimum, with a maximum total transfer operating time of 1/6 of a second (10Hz in the event of abnormal frequency difference (in excess of plus/minus 2Hz) and/or failure of the load-carrying source, the monitor shall be automatically bypassed. The monitor shall not require inter-wiring with generator controls nor active control of generator.
13. All time delay and sensing functions shall be readily field adjustable over the ranges indicated and operate without drift over minus 4 degrees Fahrenheit to 158 degrees Fahrenheit. The logic panel shall be provided with a protective cover and isolation plug in wiring harness between control panel and main transfer panel.
14. Automatic engine generator exerciser to provide adjustable 30-minutes to 60-minutes duration generator start-run and stop sequence, one time per week or one time every 2-weeks. Exercising sequence shall be field selectable with or without load connection and with or without load bank connection. The exerciser shall provide automatic (activate-deactivate) separate control of the engine generator load bank when a load bank is provided with the engine generator system. Note: Where more than one ATS is provided as part of Contract Work, only the master ATS shall be furnished with automatic engine generator exerciser feature.
15. Visual annunciators shall indicate availability of normal and emergency power sources and automatic transfer switch position. A prominent and detailed instruction plate shall be furnished.
16. Emergency engine generator “Stop” pushbutton with lockout, manual reset and audio/visual alarm annunciation.
17. Provide ground fault sensing and indication for each ATS. Shall automatically detect a ground fault condition occurring on electrical circuits connecting to the ATS. Provide audiovisual alarm notification that there is an emergency system ground fault condition. The alarm notification shall occur both local at each ATS and remotely, at the engine generator annunciator panel. The ground fault system shall not cause an interrupt of the operation of the emergency system.

B. Automatic Monitoring, Management and Load Controls
   1. Where more than one Automatic Transfer Switch (ATS) is included in the Contract Scope of Work, and/or where one or more “closed” transition operation ATS is required, provide each ATS with microprocessor based, software controlled, microprocessor controller Programmable Logic Controller (PLC). The respective engine generator(s) shall each also be provided with software Programmable Logic Controllers (PLC). The PLC units and operating software shall be compatible/interoperable with all of the other PLC and software units connected at engine generators, annunciators and ATS equipment.
   2. The PLC shall provide monitoring and visual display of engine generator and ATS analog and digital operating parameters including output voltage, output frequency and output demand load.
   3. Load automatic control, add-and-shed
      a. In the event of an engine generator overload, the PLC shall automatically disconnect (Load-Shed) respective ATS load from emergency generator source, causing the overload condition.
      b. The PLC shall also automatically control sequence-staged loading (Load-Add) using ATS connection to the engine generator source during emergency generator system initial start-run sequence.
      c. The ATS load control process shall prioritize load “shedding” and load “adding” by ATS load type priorities connected to the respective ATS. Shall provide software adjustable time delay for each load “shed” and load “add” priority level.

d. Priority #1 emergency loads shall be setup as the highest priority for load continuity supply for load-add. Priority #1 loads shall be setup as the last load-shed priority. Similar setup logic for load priorities #2, #3, and #4 in sequential descending order of priorities for emergency load add-and-shed functions.

4. The ATS supplying building units Life-Safety and Building Code mandated emergency loads (i.e., life safety exit egress lighting, fire alarm, etc.) shall have the highest priority #1 and #2 respectively, to remain connected and for "first" connected (load-add) and "last" disconnected (load-shed) to the engine generator. Loads connected to other ATS units that are not mandated by Building Codes (i.e., non-life safety loads, refrigerators, UPS, computers, air conditioning, equipment, etc.) shall have the lower priorities #3 and #4 to remain connected and/or disconnected to the engine generator. The PLC load "shed" and load "add" priorities and time delays shall be software programmable.
5. The PLC shall provide visual/audio alarm annunciation of the overload condition(s), engine generator system status/alarms each ATS load connection status and load priority start, at each engine generator location, respective engine generator remote annunciator panel and at the respective ATS.
6. The PLC shall communicate the ATS load shed and load add command controls to the respective PLC equipment in each ATS unit, and assign each ATS with a separate individual load shed and load add priority.
7. The PLC shall provide selective load "lockout" with manual reset upon shed or time delay automatic load restore of each ATS after a load shed event has occurred, software programmable at the PLC.
8. Provide the PLC equipment in each engine generator, in each engine generator remote annunciators, in each Automatic Transfer Switches (ATS) and at the building main fire alarm control panel. Provide PLC common digital/ multiplex communications protocols and operating software, to ensure correct, error-free interoperability among all the PLC units and related equipment.
9. The PLC color display screen with LCD based "touch screen" function, shall display operating status and alarms of each engine generator, and each ATS unit. 10-inches (nominal) diagonal or larger LCD screen size. PLC non-volatile memory storage shall store in memory a minimum of 30-days display information, plus the operating software program controls. Interface port for plug-in connection of portable laptop computer interface to provide uploading to the PLC software programs and downloading system-operating information from the laptop computer.
10. Each PLC shall be rated for operation in the same ambient environments and vibration conditions as the engine generator and respective ATS units.
11. ATS with "closed transition operating mode.
    a. The PLC shall provide monitoring, operational control and status information display of the ATS/Engine Generator "closed" transition and "open" transition systems.
    b. Provide an additional PLC at main electrical service entrance disconnect to monitor and communicate the P.T. and C.T. electric power and current directional flow information, plus utility source voltage and frequency information back to the ATS/generator control system.

2.3 ATS INTERLOCK AND COMMUNICATION

A. General
   1. The ATS equipment and system shall provide communications with each building's system, in addition to the engine generator. The emergency power electrical system shall communicate when the ATS is supplying emergency source electrical power or normal source electrical power.
   2. Provide communication "gateway" protocol for ATS communications compatibility with each building system.

B. Building Fire Alarm System
   1. Building Fire Alarm System, the ATS system shall communicate to the fire alarm system the emergency electrical system status; ready to operate status; running power fail status; trouble and fail-to-run or inoperative status; exercise testing-mode status; over load shed status.

C. Building Automation System – BAS

1. Building Fire Alarm System, the ATS system shall communicate to the BAS the emergency electrical system status; normal ready to operate; running normal power fail; trouble and fail-to-run or inoperative; exercise testing-mode; overload-shed.

D. Building Elevator Interlock

1. Provide transfer switch auxiliary contacts D.P.D.T. rated 480-volt AC 10 amps, for Elevator Interlock. The Elevator Interlock shall signal each elevator controller when a normal source power failure has occurred and the transfer switch has transferred to the emergency source (the elevator interlock shall not operate during automatic generator exercising).
2. The interlock shall signal the elevator control system to operate only one elevator at a time with sequential automatic return to safe-ground level and lock-out. Typical when elevator is operating on the emergency power system.
3. Fire Fighter's override; the elevator control system shall provide automatic manual transfer between each elevator in the building elevator system, to allow each elevator to operate sequentially on emergency power, one elevator at a time.

2.4 ELECTRICAL AND MECHANICAL PERFORMANCE

A. General

The system shall comply with UL Std. #1008 and NEMA Standard. ICS 2-447. In addition, the switch shall meet or exceed the following requirements and be verified by Certified Independent Laboratory Test data:

1. Temperature Rise: Measurements shall be made after the overload and endurance test.
2. Dielectric: Tested after the withstand test at 1960 VAC r.m.s. minimum.
3. Voltage Surge: Control panel voltage surge withstand test per IEEE Std. 472-1974 and voltage impulse withstand test per ICS-1-109.

B. Short Circuit Fault

1. UL listed to the magnitude of short circuit fault current available ampere RMS symmetrical at the switch terminals plus safety-factor, shall be coordinated with respective line side protective devices.
2. Automatic Transfer Switch and related assemblies shall be fully rated for the withstand, interrupt, and close/latch available short circuit fault current, plus an additional 25% safety-factor, but not less than indicated on the Drawings plus safety-factor.
3. Alternative short-circuit fault "series-rating" withstand and interrupt methods with upstream and down-stream circuit protection systems are not acceptable.
4. The Automatic Transfer Switch equipment system short circuit fault current rating duration shall selectively coordinate with the up-stream and down-stream circuit protection devices time/ current trip characteristics, as determined by the short-circuit fault report submitted by the Contractor.
   a. UL "Umbrella-Rating" for 3Hz duration short circuit fault withstand, closing and opening.
   b. UL "Umbrella-Rating" for 30Hz short circuit fault duration withstand, closing and opening.

2.5 HOUSING ENCLOSURE

A. General

1. The automatic transfer switch and bypass/isolation switch system shall be supplied in a common NEMA 1 enclosure with a barrier between the compartments. Rust inhibitor prime undercoat with Manufacturer's standard color finish final coat of paint.
2. The complete system shall be factory assembled, wired and tested prior to shipment.

B. Connections

1. All line voltage power interconnections shall be silver-plated copper bus bar.
2. Incoming line and load terminations shall be provided for top, bottom and side entry. Rear access to the transfer switch assembly shall not be required. Entire automatic switch assembly shall be constructed for front accessible only.

C. Weatherproof Outdoor Equipment
   1. Equipment indicated as Weather Proof (W.P.) or outdoors shall be enclosed in a NEMA 3R, non-walk-in, and tamper resistant construction. Provide full height hinged doors with provisions for padlocking the doors in the closed position. Install all ATS operator controls and annunciators on the front cover of ATS located securely behind the NEMA-3R ATS front access door. Do not install ATS operator controls and annunciators in the NEMA-3R-access door.
   2. Provide a nominal 300-watt sealed, resistance type, anti-condensation heater in each equipment section. Heaters shall be controlled automatically by Thermostats and Humidistats. A circuit breaker shall be provided to supply ATS "utility" source buss voltage to the heaters, all prewired by the Manufacturer to fused terminals.
   3. Finish shall be electrostatically applied finish paint over iron oxide rust inhibitor primer. Finish color shall be Manufacturer's standard color, olive green Munsel #7GY3.29/1.5. The bottom side and bottom 6 inches of floor standing equipment shall be coated with 4-mil minimum thickness rust inhibitor undercoating over finish paint, on all interior surfaces. Finish withstand test without face corrosion or blistering:
      a. Salt spray withstands - 2000 hours ASTM B117.
      b. Humidity withstands – 750-hours ASTM D2247.
   4. Exposed hardware and hinges shall be Stainless Steel type 302 or 304, tamper resistant.

PART 3 EXECUTION

3.1 GENERAL

A. The Manufacturer shall certify that the complete unit meets or exceeds the Seismic Requirements of the California Administrative Code Titles 21 and 24.

B. Certification: The Manufacturer shall provide a notarized letter certifying compliance with all the Requirements of this Specification. The Certification shall identify, by serial number(s), the equipment involved.

3.2 TEST AND COMMISSIONING (ADDITIONAL REQUIREMENTS)

A. Settings
   1. Set and calibrate field-adjustable intervals, timing settings, load-shed, load-add and delays, and engine exerciser.
   2. Check remote communications connects, protocols, interfaces and controls with remote related building systems.
   3. A Factory-Authorized Service Technician shall inspect components, assemblies, and equipment installation, including connections, and to assist in testing.

B. Testing
   1. Following completion of automatic transfer switch and generator installation and after making proper adjustments and settings, site tests shall be performed in accordance with Manufacturer's written instructions to demonstrate that each automatic transfer switch functions satisfactory and as specified.
   2. Advise Owner's Representative of the site testing 10-days prior to the scheduled date. Provide Certified Field Test Reports three copies within 14-days following successful completion of the site tests to the Owner's Representative. Test reports shall describe adjustments and settings made and site tests performed.
   3. Operational tests shall include the following:
      a. Insulation resistance shall be tested, both phase-to-phase and phase-to-ground.
      b. Inspect for physical damage, proper installation connection, and integrity of barriers, covers, and safety features.
      c. Verify that manual transfer operation.
      d. Perform manual transfer operation.

4. After energizing circuits, demonstrate the interlocking sequence and operational function for each automatic transfer switch.
    a. Simulate power failures of normal source to automatic transfer switches and of emergency source with normal source available.
    b. Simulate loss phase-to-ground voltage for each phase of normal.
    c. Verify time-delay settings.
    d. Verify pickup and dropout voltages by data readout and inspection of control settings.
    e. Verify proper sequence and correct timing of automatic engine starting, transfer time delay, re-transfer time delay on restoration of normal power, and engine cool-down and shut-down.
5. Coordinate with testing of ground and fault protective devices for power delivery from both sources.
    a. Verify grounding connections and locations and ratings of sensors.
    b. Test bypass/isolation unit functional modes and related automatic transfer-switch operations.
    c. Power failure of normal source shall be simulated by opening upstream protective device. This test shall be performed a minimum of five times.
    d. Power failure of emergency source with normal source available shall be simulated by opening upstream protective device for emergency source. This test shall be performed a minimum of five times.
    e. Low phase-to-ground voltage shall be simulated for each phase of normal source.
    f. Operation and settings shall be verified for specified automatic transfer switch operational feature, such as override time delay, transfer time delay, return time delay, engine shutdown time delay, exerciser, auxiliary contacts, and supplemental features.
    g. Manual and automatic transfer and bypass isolation functions shall be verified.
6. If any defects or deficiencies are detected, correct the defects and repeat the test until all test-pass is achieved.

3.3 ELECTRIC POWER AND CONTROL CIRCUITS (ADDITIONAL REQUIREMENTS)

A. General
1. Provide NEC Class-1, Divison-1 explosion-proof conduit fittings and seals on each conduit entering or exiting the engine generator location from the ATS.
2. Terminal blocks with barriered terminals shall be provided for all control wiring terminator points. Control wiring shall be run in horizontal and vertical, isolated, internal metal wireways and shall be carried across hinges in laced bundles. Wire terminators shall be crimp-on type spade terminal
3. Secondary control wiring shall be a minimum of 14 AWG stranded copper type SIS 600-volt insulation.
4. Control circuits shall have circuit number tags at each termination or break in the wire to match circuit numbers on terminal strips and control wiring diagrams.
5. Provide quantity and AWG conductor size/type capacity, circuit conductor “lug” connection landings, compatible with connections shown on the Drawings.

B. Additional Conduit Homeruns
1. Provide the following minimum quantity and size conduit and wire, to connect each ATS controls, generators, monitoring, and annunciators, shall also comply with ATS and Engine Generator Manufacturer’s recommendations. Install the conduit and wire from each ATS to the respective engine generator, monitoring and control equipment and locations. Refer to Drawings for additional requirements. Install conduit underground and/or concealed in building structure at all locations.
    a. 1.25-inch conduit 5#10 plus 1#10 ground and 12#14 from each ATS to engine generator, for engine automatic stop-start controls, overload shed and add, engine exercising, engine generator “emergency-stop”, control and monitoring.
    b. ATS line voltage feeder circuits for generator source, normal source and load feeders.
    c. 1.0-inch conduit 4#10 to each elevator equipment /machine room controller unit – elevator interlock.
    d. 0.75-inch conduit 8#14 to fire alarm control panel for fire alarm system monitoring and control of ATS.

e. 1.0-inch conduit 8#12 to HVAC – BAS building automation system master control transponder.
f. Two 1.5-inch conduits to the generator, with engine generator control circuits for momentary parallel-synchronized operation of the engine generator with the Electric Utility Company incoming electric service. Circuit conductor quantity and type as recommended by Manufacturer.

END OF SECTION 263210
082417/1010006

SECTION 263215
STANDBY POWER

Revised, Addendum #2, 09/01/2017

PART 1 GENERAL

1.1 SCOPE

A. Work Included: All labor, materials, appliances, tools, equipment, facilities, transportation and services necessary for and incidental to performing all operations in connection with furnishing, delivery and installation of the work of this Section, complete as shown on the Drawings and/or specified herein. Work includes, but is not necessarily limited to the following:

1. Examine all other Sections for work related to those other Sections and required to be included as work under this Section.
2. General provisions and requirements for electrical work.

B. Engine Generator

1. Furnish and install emergency continuous standby diesel (USA-grade #2 ULSD-CARB) fuel engine driven generator with all accessories and other appurtenant work and materials required for a complete operational installation.
   a. The fuel provided shall comply with; be listed by; and shall be approved by, the California Air Resources Board (CARB Fuel Specifications and Test Methods).
2. The standby power system shall include an electric generating set rated to deliver 250kW, 313kVa at 0.8 power factor. Engine not less than 464Bhp minimum, Inline 6 cylinders at 1800RPM. ***ADD-2***
3. Unit rating shall not be based on the peak output curve of the prime mover. Unit rating shall be based on the continuous standby rating at the altitude above sea level of the engine generator installation site. Performance engine curves shall be submitted.
4. The engine generator output voltage shall be 480/277 volts, 3 phase, 4 wire, 60Hz AC.
5. The engine generator set shall be built, tested and shipped by the Manufacturer of the unit so there is one source of supply and responsibility. As manufactured by Cummins; or Kohler; or Caterpillar.

1.2 SUBMITTALS (ADDITIONAL REQUIREMENTS)

A. General

1. The Factory Authorized Distributor supplying the equipment shall have full service and parts available on a 24-hour basis located within 200 miles of the Project Site. Instruct the involved Contractors on the proper method of installing the engine generator unit and related equipment.
2. Make Shop Drawings to scale, showing overall dimensions and other dimensions required for proper installation of equipment and external connections. Identify clearly each item on Drawings to show piece of equipment it represents. Indicate corrosion resisting treatment and finish.
3. Shop Drawings shall include complete Floor Plan layout of room and/or area show install location of all equipment and indicate equipment layout, conduits, junction boxes, etc., complete with dimensions and clearances for review of the Owner's Representative.
4. Diagrams shall be both schematic and elementary point-to-point using standard symbols and with components arranged in logical sequence, so that system operation can be checked easily. Where special symbols are used or where function of components is not obvious, include suitable legend or functional guide. Number all terminals for external wiring connections on diagrams. A composite control wiring diagram shall be provided showing the integrated control and load connections of the following:
   a. Engine generator and control panel.
   b. Engine generator remote annunciator panel.
   c. Automatic transfer switch.
   d. Battery charger.
   e. Special interlocks noted on Drawings.
   f. Fuel system.
   g. Load testing system.

h. Connect to control and monitoring systems.

5. Submit prototype, independent test lab, certified test reports for engine generator unit of identical size, type and construction showing conformance with performance requirements outlined in the Contract Documents. Plus the following additional tests:
   a. Maximum power level.
   b. Maximum motor starting capacity.
   c. Fuel consumption.
   d. Engine/alternator cooling air flow (heat rejection).
   e. Transient response and steady state governing.
   f. Alternator temperature rise.
   g. Single step load pickup.
   h. Harmonic analysis and voltage wave form.
   i. Three phase short circuit test for mechanical electrical strength.

B. Pollution Emissions

1. The engine generator shall comply with the air pollution controls and pollution emission limits regulations of the Authorities Having Jurisdiction (AHJ), including but not limited to the following: A Manufacturer's "Certified Equipment Permit" shall be provided showing the proposed equipment AHJ approval permits.
2. United States Federal Government.
   a. Environmental Protection Agency (USEPA) – Local Region Having Jurisdiction.
3. State of California:
   a. California Environmental Quality Act – CEQA.
   b. California Environmental Protection Agency (CALEPA) and California Air Resource Board (CARB).
   c. California Air Quality Management District (AQMD) District Office Having Local Jurisdiction at the Project Site location.
   d. Additional Local and City/County Pollution Control District Authorities Having Jurisdiction.
4. The emission pollutants tests and reports shall include but not be limited to the following:
   a. Reactive organic gases – (ROG)
   b. Nitrogen oxides – (NO_X)
   c. Carbon monoxide – (CO)
   d. Particulate matter – (PM)
   e. Sulfur oxides – (SO_X)
   f. Non Methane Hydrocarbons – NMHC
   g. Non Methane Organic Gas – NMOG
   h. Total Organic Compounds – TOC
   i. Carbon Dioxide – CO_2
   j. Fuel storage containment, fuel leak detection and leak monitoring system.
5. Pollution emissions and Particulate Matter (PM):
   a. The engine generator pollution emissions and particulate emissions shall not exceed AHJ requirements.
   b. In no case shall particulate emissions exceed the following: The engine combustion air exhaust (discharge) emissions shall not exceed Particulate Matter (PM) emissions of 0.01 grams/Bhp-HR (engine brake horsepower each hour) at all engine generator load factors.
6. The engine generator Manufacturer shall prepare pollution emissions reports for the proposed engine generator. The reports shall be in the format and include the documentation required by the AHJ for emissions regulations. The engine generator operational pollution emissions and controls shall comply with the requirements and regulations of the AHJ for the intended engine generator use. If the engine generator requires the addition of emission controls and/or abatement controls to comply with AHJ requirements, provide said controls as part of the Contract Document requirements.

7. Apply for and obtain in the name of the Contractor and the Owner respectively the Permits to construct and Permits to operate the engine generator system as a Building Code mandated Emergency Stand-by Power System. Provide four copies of each permit application for review by the Owner's Representative prior to submittal to AHJ. Obtain the AHJ approval of the permits, along with a written description of any additional actions the Owner must accomplish. Submit all documents to the Owner's Representative.
    a. The design intention hours of engine operation (engine running) are less than 199 hours in a 12-consecutive month period of time, to supply Building Code mandated emergency electrical power. The actual operating (running) time of the engine generator will be determined by uncontrollable and unpredictable conditions, such as; acts of God; equipment failures; Utility Company outages; rolling blackouts, etc. The design intent estimated engine operating time includes an estimated 30-hours of programmable time for testing (exercising) maintenance of the engine generator system.
    b. The following is a partial list of "Non-Code" mandated electric loads that will be connected to the standby engine generator system:
        - UPS equipment
        - Refrigerator/freezer motor load equipment
        - Radio frequency transmitter
        - Intrusion detection/security alarm
        - Time-of-day master clock system
        - PBX telephone, intercom, paging equipment
        - HVAC air conditioning
        - Other loads as shown in the Contract Documents

C. Quality Control
1. General
   The equipment shall be listed, labeled and approved for the application shown in the Contract Documents, as Building Code mandated, emergency electrical power supply equipment, complying with the most recent versions of the requirements of the following applicable Standards. The following Standards shall become requirements of and are included in the Contract Documents:
2. Underwriters Laboratory – UL
    a. UL – 142, Steel aboveground Tanks for Flammable and Combustible Liquids.
    b. UL - 2085, Fire Rated (vaulted) aboveground tanks for Flammable and Combustible Liquids. Fuel Tanks.
    c. UL – 508, Industrial Control Equipment.
    d. UL – 2200, Standard for Safety for Stationary Engine Generators.
3. National Fire Protection Association – NFPA
    a. NFPA – 30, Flammable and Combustible Liquids Code.
    b. NFPA – 37, Stationary Combustion Engines and Gas Turbines.
    c. NFPA – 70, National Electrical Code.
    d. NFPA – 99, Essential Electrical Systems for Healthcare Facilities.
    e. NFPA – 110, Emergency and Standby Power Systems.
4. National Electrical Manufacturer's Association – NEMA
    a. NEMA – MG1.1, Electric Motors and Generators
5. American National Standards Institute – ANSI
    a. ANSI – 43, Recommended practice for Testing Insulation Resistance of Rotating Machinery
6. Institute of Electrical and Electronic Engineers – IEEE
    a. IEEE – 446 Recommended Practice for Emergency and Standby Power Systems
7. National Electrical Contractors Association – NECA; National Electrical Installation Standards – NEIS.
    a. NECA – EGSA404, NEIS – Recommended Practice for Installing Generator Sets.
8. State of California Air Resources Board (CARB).

D. Operating Manuals
1. Provide in acceptable form, three bound copies of Operating Manuals for electrical equipment.
2. Provide catalog cuts, functional description of operation, wiring diagrams, operating and maintenance instructions, parts lists and other data useful and necessary for complete Maintenance and Operation of equipment.

3. Deliver operating manuals to the Owner's Representative.

E. Special Considerations
   1. Manufacturer shall have printed literature and brochures on the complete unit describing the standard series specified.
   2. Critical Speeds: Each complete engine-generator unit shall be free of critical speeds of either a major or minor order that will endanger the satisfactory operation of the unit or cause undue vibration in any part of the plant equipment or structure. Satisfactory operation will be considered endangered if torsional vibration stresses exceed 5,000 psi within 10% above or below rated engine speed. Copies of a summary of computations of critical speeds shall be submitted.
   3. All openings for fuel lines, air intake/discharge, engine exhaust, conduits etc. shall be temporarily capped or plugged prior to shipment.

F. Short Circuit, Coordination and Arc-Flash (Additional Requirements)
   1. Perform and submit Engineered Settings for each equipment location, fuse and adjustable circuit breaker device, showing the correct time and current settings to provide the coordination within the limits of the specified equipment, per the latest applicable standards of IEEE and ANSI. Provide electrical system short circuit fault analysis, both 3-phase line-to-line and 1-phase line-to-ground calculations as part of the Coordination Analysis recommendations. Provide Electric Arc-Flash calculations as part of the Coordination Analysis recommendations.
   2. The information shall be submitted in both tabular form and on time current log-log graph paper, with an Engineering Narrative. Written narrative describing data, assumptions, analysis of results and prioritized recommendations, six copies.
   3. The goal is to minimize an unexpected but necessary electrical system outage and personnel exposure to the smallest extent possible within the fault occurrence location, using the specified Contract Equipment. Shall comply with, but not limited to:
      a. IEEE-242, Recommended Practices for Protection and Coordination of Industrial and Commercial Distribution.
      b. IEEE-399, Recommended Practice for Industrial and Commercial Power System Analysis.
      c. IEEE-1584, Guide to Performing ARC-Flash Hazard Study.
      d. CEC/NEC

G. Seismic Earthquake and Wind Loading Withstand, Testing and Certification (Additional Requirements)
   1. The complete engine generator assembly; including attached fuel storage and supply systems, cooling systems, exhaust system, housings/enclosures, accessories, supports/anchors etc., shall be designed, manufactured and tested for wind loading and earthquake seismic withstand at the installation location.
   2. Shall withstand, survive and maintain continuous non-interrupted operation (running) during the seismic event occurrences. Continued normal operation after the wind event and seismic event occurrences have abated.
   3. Shall include demonstrations of successful start-and-run test after completion of seismic event shake-table simulation.
   4. Provide three dimensional finite element analysis demonstrating anchorage and operational withstand of wind loading as follows:
      a. 100MPH-West Coast States USA and Hawaii.
      b. 150MPH-East Coast States USA, Gulf Coast States USA and Alaska States.
      c. 90MPH-all other USA locations.
   5. Acceptance test seismic qualification of proposed engine generator shall employ triple axis shake-table simulation of the Required Response Spectrum (RRS) seismic event motion, certified and approved by the AHJ.
   6. All unit fluids shall be at full-capacity during the seismic test.
   7. Seismic test shall be performed by a third party independent Test Laboratory. Wind Analysis and Seismic Testing and Reports shall be certified, signed and "Stamped" by PE Professional Engineer licensed and in good standing in the State, Civil Engineer or Structural Engineer.

PART 2 PRODUCTS

2.1 ENGINE

A. General

1. The engine shall be diesel drive, two or four cycle, water cooled type with unit mounted radiator cooling, turbo-charged, operating speed of 1800 RPM. Engine speed shall be governed by an electronic governor with electrical activator, as manufactured by Barber Colman; Woodward Governor Company.
2. A unit mounted, 24 volt, D.C. 30-amp battery charging alternator and solid state regulator shall be provided.
3. Engine shall be rated for continuous standby duty.
4. The engine lubrication system shall be pressure type with engine driven lubrication oil pump and replaceable oil filter element, full flow oil filter. Breather pipe suitable for adding engine-lubricating oil while the engine is running shall be provided. Provide lubricating oil per Manufacturers recommendations.
5. The engine throttle control system shall provide a minimum discrete engine speed adjustment sensitivity of 0.15Hz, measured at the generator output under all loading conditions.
6. Engine Governor:
   a. The Engine Generator shall be furnished with digital electronic Isochronous Engine Governor and Generator Voltage Regulator.
   b. The Engine Governor shall provide measurement of the engine operating temperature; automatically adjust the engine governing gains as a fraction of the engine temperature to prevent unstable governor operation due to temperature.
   c. The engine generator output frequency control shall incorporate output frequency adjustable transient slew-rate, to prevent engine generator instability resulting from “pulsing” emergency loads.
7. The engine generator set package shall comply with the manufacturing requirements and test requirements of UL-2200.
8. Provide modifications for remote control operation from the ATS. Generator speed, frequency, power factor and load sharing shall be controlled from the ATS. The engine generator shall be modified for parallel and synchronized operation with the Electric Utility Company incoming electric service. Provide additional engine generator controls required by the ATS Manufacturer, to ensure correct and safe operation of the engine generator parallel and synchronized operation with the Utility Company. The engine generator interconnection additional protection shall comply with:
   a. IEEE-1547, 1547.1, 1547.2 and 1547.3 including pending draft standards.
   b. Serving electric utility company requirements.
   c. State of California Rule #21 recommendations and requirements.

B. Engine Horsepower

1. The engine horsepower output shall be sized to provide sufficient capacity to operate all specified engine generator accessories and still maintain the electrical output and performance characteristics specified for the engine generator unit. The engine horsepower rating shall be increased to compensate for the following factors at the installation location. Submit calculations showing allowances for each condition:
   a. Installation altitude above sea level and specified ambient air temperatures.
   b. Engine driven radiator cooling fan.
   c. Cooling air positive and negative back pressure increases caused by radiators, radiator mounted load banks, generator housing, sound attenuation baffles, air louvers and cooling air intake/discharge air ducts.
   d. Engine driven fuel pumps.
   e. Engine driven coolant pumps.
   f. Engine driven battery charger.
   g. Generator coupling/transmission gearing losses.
   h. Engine driven lubrication pumps.
   i. Engine combustion exhaust mufflers and engine exhaust system piping.
   j. Engine combustion air intake filters and intake air silencers.
   k. Engine driven super chargers and turbo chargers.

l. Engine fuel source/type derating factors.
m. Engine combustion exhaust emission controls, with back-pressure monitoring and reporting system.

C. Engine Controls
1. Oil pressure, and temperature gauges.
2. Water temperature and pressure gauges.
3. Battery charge alternator rate ammeter.
4. Solid state, plug-in module monitor system including visible low water temperature alarm, individual fault lights, alarm terminals and engine shutdown with manual reset for over crank, over speed, high water temperature, low fuel, high oil temperature and low oil pressure. Low oil pressure, high water temperature and low fuel shall provide pre-alarm prior to engine shutdown. Over speed shall provide both positive air and fuel supply shut-off at approximately 110% of operating RPM.
5. Solid state plug-in type cycle “cranking” start control. After three failed cranking attempts of approximately 75 seconds each, the crank/rest cycles will be terminated, with alarm and manual reset.

2.2 ALTERNATOR (GENERATOR)

A. General
1. The line voltage alternator shall be a revolving field, broad range, 4-pole, brushless, designed for minimum reactance, low voltage waveform distortion and maximum efficiency. The rotor amortisseur windings shall improve the AC waveform, reduce field heating with single phase or unbalanced loads and act as a stabilizer for paralleling. The rotor shall be dynamically balanced, connected and aligned to the engine by a semi-flexible disc coupling.
2. The three phase alternator shall be twelve lead reconnectable. The insulation shall be NEMA MG1-1.65. Temperature rise 80 degrees centigrade per NEMA MG1-22.40. Insulation shall be vacuum impregnated for improved protection and cooling.
3. The exciter shall be brushless, three phase, full wave rectified, with silicon diodes mounted on common rotor shaft and sized for electric induction maximum motor starting capacity.
4. The voltage regulator shall be digital type solid state, including silicon controlled rectifiers with three phase-controlled sensing circuits. The system shall feature automatic voltage reduction if the load demand exceeds the engine capacity, to eliminate engine stalling due to an occasional engine misfire or temporary overload such as motor starting and shall prevent overheating or blowing of fuses of the load circuit, due to saturation of magnetic components, when the voltage remains constant at reduced frequency. The voltage reference shall be a temperature compensated Zener Diode. The voltage regulator shall eliminate voltage regulator incorrect operation caused by voltage distortion resulting from non-linear emergency loads.
5. The winding “pitch” of each generator shall be matched and shall be the same for each generator. The engine “governor”, generator “voltage regulator” and generator “exciter” shall all be the same Manufacturer and type for each engine generator.
6. Anti-condensation heater in the generator line voltage alternator with automatic “on-off” control shall prevent condensation from occurring inside the alternator. 120/208 volt 60Hz operation, single or 3-phase as indicated on the Drawings. Provide automatic cut-off when engine is running and automatic thermostat control.

B. Harmonic Load Compensation
1. The engine generator alternator system, generator windings, voltage regulator and exciter shall be compensated for "SCR" type loads on the output side, with 50 percent 3rd, 5th, 7th and 9th harmonic voltage and current content in the connected loads.
2. SCR emergency type loads include Variable Speed Motor Drives (VFD); uninterruptible power supplies (UPS), computer/data processing equipment, lighting electronic dimming equipment, audio/video equipment, etc.

C. Generator Controls
1. Manual reset exciter automatic circuit breaker.
2. Output load voltmeter, true RMS.
3. Output load ammeter, true RMS.

4. Output load power factor meters, for both negative and positive power factors.
5. Combination voltmeter-ammeter selector switch for phase-to-phase and phase-to-neutral meter input.
6. Analog meters shall be not less than 4-inches in size. Digital meter digits shall be not less than 0.25-inch high. Meter accuracy ± 1%.
7. Elapsed running time meter, 0-99999 hour's minimum, non-resettable.
8. Output load frequency meter (true relative to engine speed).
9. Output load voltage manual adjusting rheostat, plus or minus 5% rated output voltage and voltage regulator.
10. Startup cranking controls.
11. Solid state digital electronic protection devices with adjustable settings for; loss of excitation; output overvoltage protection; under/over frequency; generator winding differential overcurrent protection; reverse VAR (loss of field) protection to prevent pole-slippage and mechanical impact damage because of out-of-phase paralleling action with the utility source or other engine generators.
12. Generator control panel illumination, with on-off manual switch illumination control.
13. Output load circuit breaker mounted in NEMA 1 enclosure on the side of the generator control panel. A signal light shall be provided to indicate breaker is in the "off" or tripped position. Circuit breaker shall be mounted on vibration isolators. Circuit breaker shall be rated for "service entrance" use. Circuit breaker shall be 100% continuous load rated. The circuit breaker shall be sized at not less than 115% of the generator rated electric load output and voltage. The output load circuit breakers shall be provided with adjustable trip settings as follows:
    a. Instantaneous pickup.
    b. Long time pickup and longtime delay.
    c. Provide ground fault detection sensor on the generator main disconnect. The sensor shall provide audio/visual alarm indication in the event of a ground fault detection occurring in the electrical line voltage output connecting into the generator main disconnect. The ground fault condition shall also provide audio/visual alarm indication at the engine generator remote annunciator panel. The ground fault system shall not cause an interruption of the emergency system.
14. Three position control selector switch "Automatic-Off-Run" when the switch is in the "off" position a red pilot light shall activate with a nameplate "Generator is not operable" when light is on.
15. Remote stop-start connection terminals.
16. Reset pushbutton to reset automatic shutdown lockout circuits.
17. All controls shall be identified as to function with engraved nameplates or engraved control panel. Nameplates shall be fastened with bolts, nuts and lock washers.
18. Combination engine and generator control panel shall be shock mounted over the rear end of the alternator, and include switched panel lights, controls shall be solid state type.
19. Provide a factory prewired terminal panel in the engine generator control panel. The terminal panel shall provide individual "landing" and termination points for each control/annunciator circuit entering and exiting the engine generator location. Each termination point shall be vibration resistant, insulated, barriered, and identified with individual circuit numbers/names.
20. Exposed control and monitoring wiring shall be installed in liquid tight fuel, oil and fire resistant flexible raceways within the engine generator housing.
21. Engine generator emergency shutdown:
    a. Provide "Emergency-Stop" manual control station switch to automatically stop-shutdown engine generators when the switch is activated.
    b. Weather resistant; tamper resistant manual operation, double action (breakable glass) with auto-lockout on activation. Flush mounted or surface mounted +42-inches on wall to accommodate wall condition.
    c. Provide alarm indication on generator control panel when switch is activated. Provide a switch at each entry door location into the engine generator enclosure/room; each main fire alarm control panel; and at each engine generator automatic transfer switch. Provide 5#10 – 1-inch conduit homerun to engine generator from each switch.
    d. As manufactured by ASCO #124 series, Square-D or equal.

D. Automatic Load Controls, Engine Generator Controls and Monitoring-Programmable Logic Controller

1. Each engine generator shall be provided with microprocessor based, software controlled, engine generator management Programmable Logic Controller (PLC), rated specifically for engine generator monitoring and control. The respective remote annunciators and ATS units shall each also be provided with compatible matching software for Programmable Logic Controllers (PLC) engine generator systems.
2. The PLC shall provide monitoring, control and visual display of engine generator analog and digital operating parameters including output voltage, output frequency and output demand load.
3. In the event of an engine generator overload, the PLC shall automatically disconnect (shed) respective ATS load causing the overload condition.
4. The ATS load control process shall prioritize load "shedding" and load "adding" by ATS load types connected to the respective ATS, and shall provide software adjustable time delay for each load "shed/add" priority level. The PLC shall provide individual independent load "shed" and load "add" priority for each ATS connected to the engine generator.
5. The ATS units supplying Building Code mandated emergency loads (i.e., life safety exit egress lighting, fire alarm, etc.) shall have the highest priority to remain connected to the engine generator. Loads connected to other ATS units that are not mandated by Building Codes (i.e., non-life safety loads – refrigerators, UPS, computers, air conditioning, telephone equipment, etc.) shall have the lower priorities to remain connected to the engine generator. The PLC load "shed/add" priorities shall be software programmable.
6. The PLC shall provide visual/audio alarm annunciation of the overload condition(s), engine generator system status/alarms and each ATS load connection status, at each engine generator location, respective engine generator remote annunciator panel and at the respective ATS.
7. The PLC shall communicate the ATS load "shed/add" command controls to the respective PLC equipment in each ATS unit, and assign each ATS with a separate individual load "shed/add" priority. Provide the PLC equipment in each engine generator, remote enunciators and Automatic Transfer Switches (ATS). Provide PLC common digital/multiplex communications protocols and operating software, to ensure correct, error-free interoperability among all the PLC units and related equipment.
8. The PLC shall provide selective load "lockout" with manual reset upon shed or time delay automatic load restore of each ATS after a load shed event has occurred, software programmable at the PLC.
9. The PLC color display screen with LCD based "touch screen" function shall display operating status and alarms of the engine generator, fuel system and each ATS unit. 10-inch diagonal or larger LCD screen size. PLC non-volatile memory storage shall store in memory a minimum of 30-days display information, plus the operating software program controls. Interface port for plug-in connection of portable laptop computer interface to provide uploading to the PLC software programs and downloading system operating information from the laptop computer.
10. Each PLC shall be rated for operation in the same ambient environments and vibration conditions as the engine generator.

2.3 UNIT ENGINE AND GENERATOR COMBINED PERFORMANCE

A. General

1. Frequency Regulation: Isochronous no-load to rated load.
2. Voltage Regulation: Steady state voltage regulation shall be within plus or minus 2% of rated voltage from no-load to full rated load.
3. Recovery to stable operation after application of full rated load shall occur within 5-seconds.
4. Steady State Operation: The frequency variation shall not exceed plus or minus 0.15Hz. Voltage variation shall not exceed plus or minus 1% of their mean value. The steady state operation shall be based on constant loads ranging from no load to full rated load.
5. Electromagnetic Interference Level Attenuation shall exceed requirements for generator connected loads including but not limited to: data processing equipment, Uninterruptible Power Supplies (UPS), standard AM and FM radio, CATV and commercial television, marine radio-

telephone equipment. Tele-phone influence factor shall be less than fifty pursuant to NEMA MG1-22.43.

6. Waveform Deviation Factor shall be less than 0.06 line-to-line and line- to-neutral per NEMA MG1-22.42.
7. RMS Voltage Dip: The sustained RMS voltage dip shall be less than 18% of rated voltage when full 3 phase load and rated power factor is applied to the alternator.
8. Peak kVA: The available peak kVA shall be suitable for simultaneous electric motor starting as shown on the Contract Documents. Quantity and size of motors as indicated on the Drawings, shown connected to engine generator system. The generator shall sustain at least 90% of no load voltage for 10 seconds with 250% of rated load at zero power factor connected to its terminals. Submit test data.

2.4 ENGINE GENERATOR REMOTE ALARM ANNUNCIATOR PANEL

A. General

1. A remote mounted alarm annunciator panel in a NEMA 3R flush mounted enclosure with clear tamper resistant locking cover door, at each location shown on the Drawings, but in no case less than one annunciator for each engine generator.

B. Annunciator Display

1. The annunciator shall include the following with appropriate sensors “sending” units installed in each engine generator, fuel system and ATS units.
   a. Generating: Generating power ready for load.
   b. Over crank: Electric plant failed to start.
   c. Low Oil Press: Low engine lube oil pressure.
   d. Hi Engine Temp: Pre-alarm and final excessive cooling water temperature.
   e. Low Engine Temp: Low engine cooling water jacket temperature.
   f. Over speed: Excessive RPM of electric plant.
   g. Low Fuel: Pre-alarm and final low fuel supply.
   h. Low Battery Voltage: Low starting battery voltage.
   i. Hi Battery Voltage: High starting battery voltage.
   j. Weak starting battery alarm.
   k. Overvoltage: Generator output over voltage.
   l. Fuel Spill: Each fuel storage unit rupture basin fuel spill detection.
   m. Low coolant: Engine low coolant level.
   n. Low oil level: Low engine lube oil level.
   o. PER engine emissions common alarm and status.
   p. Generator ground fault alarm.
   q. ATS alarms for each ATS.
      1) ATS: connected to normal utility source.
      2) ATS: connected to generator source.
         Engine generators supplying more than one Automatic Transfer Switch (ATS) shall include the following additional alarm annunciation for each individual ATS:
      3) ATS: generator overload shed.
2. Audible alert:
   a. An audible signal will sound with the visual signals, except for conditions paragraph 1.a; 1.q.1 and 1.q.2 above. A switch will be incorporated to silence the audible alarm until the alarm condition is corrected. The audible alarm shall then sound until the switch is repositioned to the "normal" position.

2.5 FUEL

A. Fuel Connections

1. Engine mounted and piped dual parallel, in line “Baldwin” or “Dahl” fuel filters. Each fuel filter twin chamber, 3-stage combination fuel filter/water Separator. Provide valving for replacing individual filters while engine is running and valves for draining accumulated water from each filter.

2. Flexible, bronze, fuel line connectors' minimum 24-inches in length for supply and return fuel line connections. Leak proof connectors type and size to match and be compatible with respective fuel lines and engine connectors.
3. Main remote fuel storage tank system, fuel transfer pumping, and fuel line piping under related Contract Document Sections and Drawings.

B. Maximum Permitted Engine Fuel Flow
1. The full rated fuel consumption for the engine generator shall not exceed the following:
   a. Maximum engine full load fuel consumption shall not exceed "(insert gallons)" gallons per hour.
   b. Maximum engine fuel flow rate shall not exceed: (engine full load fuel consumption) plus (excess fuel flow for engine components cooling) "(insert gallons)" gallons per hour.

2.6 COOLING

A. Liquid Cooling
1. The engine shall have an engine driven centrifugal type water circulating pump with bypass, for circulating thermostat controlled water through the engine cooling system.
2. 50% water and 50% permanent solution anti-freeze protection.

B. Radiator
1. Radiator Cooling: A unit-mounted radiator and piping, with pusher type fan shall be provided for full load continuous standby operation in an ambient 24 hour temperature of 110 degrees Fahrenheit and including the "load-bank" cooling airflow requirement. Provide a fan shroud and protective guard. Radiator coolant drain petcock and pressure relief filler cap.
2. Radiator shall be provided with metal duct flanges for connection of flexible discharge air duct.
3. Provide, flexible metal, rust resistant, watertight, discharge air duct. The air duct shall connect airtight from the radiator/radiator mount loadbank duct flanges to the respective wall louver air discharge opening located to the front direction of the radiator. Flair the air duct to direct all radiator/loadbank cooling discharge air through louvers and to match the size of the radiator/ loadbank configuration to the larger size of the wall louver configuration.
4. The pusher radiator fan shall be sized to provide proper cooling air flow to overcome the static back pressure of the supply and exhaust cooling air ducts, radiator, plus the radiator mounted resistance "load-banks", plus the discharge air ducts and louvers associated with the engine generator installation. Submit back pressure air flow calculations for review.

C. Water Jacket Heater
1. Water jacket engine electric resistance preheater shall provide positive water circulation, thermostatically controlled to operate within range of 100 degrees to 120 degrees Fahrenheit. In an ambient temperature of zero degrees centigrade, 120/208 volt 60Hz AC, single or three phase, as indicated on Drawings. Provide automatic power cut-off contactor/relay when engine is running and to cycle the operation of the heaters. Provide shut-off bypass valves on heaters at both the inlet and outlet sides, readily accessible. As manufactured by "Kim-Hotstart".
   a. 11 feet from a property line.
   b. 4 feet from an exterior wall or roof.
   c. 11 feet from windows, building openings, air outlets and air intakes for the building.

2.7 ACCESSORIES

A. Batteries:
1. Starting batteries shall be lead acid type. Batteries shall provide sufficient capacity to provide the equivalent of three 75-second duration engine cranking operations with a 60 second rest period between cranking operations at 77 degrees F. with a cold engine and final battery voltage of 1.75 volts per cell at 77 degrees Fahrenheit. Specific gravity of fully charged battery shall not exceed 1.220 at 77 degrees Fahrenheit. Batteries shall be equipped with removable cell caps utilizing catalytic conversion of hydrogen battery gases. Provide insulated stranded copper conductors to connect batteries to generator electric starting motors(s), sized to insure a full load voltage drop of not more than 5% when starting the engine.

2. Battery Box: Battery box shall be rated outdoor weatherproof. Acid resistant fiberglass battery box with hinged, padlocking cover. Electrically insulated seismic earthquake restraints and anchors. Install batteries in battery box. Install battery box on floor directly adjacent to engine generator for indoor locations. Install battery box inside engine generator housing for outdoor locations.
3. Battery Charger: Completely solid state. DC output shall be voltage regulated and current limited so as not to require a cranking disconnect relay. The charger shall include: full wave output, silicon semiconductors, automatic boost (equalize) mode, surge suppression, individual potentiometer adjustments for boost and float voltage, DC output voltmeter and ammeter, AC and DC fuse, input and output terminals, DC output completely isolated from AC input, and shall completely recharge full discharged batteries within a 12 hour period. Input voltage shall be 208-volt, as indicated on the Drawings. NEMA 3R for outdoor locations and NEMA 1 enclosure for indoor locations.
4. Weak Battery Alarm: Monitor the engine starting battery voltage under start-up load, while the engine is cranking in the start-mode. If the starting battery voltage drops for too long a time period, (as recommended by Battery Manufacturer) a "weak-battery" audible warning shall sound, along with annunciator visual alarm indication.

B. Engine Exhaust Silencer
1. Super-critical grade exhaust silencer with companion flanges, rain-cap, and seamless stainless steel flexible exhaust tubing, 18-inch minimum length.
2. Provide approximately 8-inch length of rigid schedule 40 black iron pipe between the exhaust manifold and the flexible tubing. Sweep elbows a minimum radius of three times the exhaust pipe diameter shall be used for exhaust pipe bends.
3. Provide safety, continuous heat guards on all engine exhaust piping, manifolds and silencers located below 10 feet above finish grade.
4. Provide automatic gravity operated "rain-cap" on discharge, to prevent entry of rain and vermin. Horizontal or vertical exhaust discharge, for compatibility with install location.
5. Provide drain "petcock" at the low point of each exhaust stack to allow condensate gravity drain of engine exhaust system.
6. 72dB(A). ***ADD-2***

C. Engine Exhaust Emissions and Particulate Emissions (PER) Reduction
1. The PER shall be a self-contained, passive, self-regenerating, continuously self-cleaning (regenerating) particulate filter, with internal precious metal catalysts in conjunction with the particulate filters. Connect the PER "in-line" with engine combustion air exhaust discharge system. PER high temperature 304 stainless steel housing, supports and fittings. The PER system, supports, and housing shall withstand and operate correctly with the engine exhaust flow output, pressures, physical characteristics and thermal conditions of the engine exhaust system. The PER shall be specially designed and manufactured for stationary, internal combustion engine operation and for 2-stroke or 4-stroke engines as applicable.
2. The PER shall actively reduce environmentally harmful products of ENGINE combustion present in the engine combustion air exhaust. The PER shall not cause an increase in any other engine exhaust toxic contaminants:
   a. Diesel particulates reduction (without increasing $N0^2$ content) not less than……85% reduction
   b. Carbon Monoxide (CO) not less than ……70% reduction
   c. Total Hydro Carbons (THC) not less than……70% reduction
3. The PER shall be Tested, Approved and Certified to comply with Federal - EPA, State and Local Air Quantity Management Districts and applicable AHJ, by the Engine Generator Manufacturer, for safe correct operation of the proposed engine/PER combination and by the PER Manufacturer for AHJ compliance and engine compatibility. The PER shall be listed and approved by and with each AHJ.
4. A microprocessor - based, data logger and alarm, with data logger and sensors installed to Record PER temperature and engine exhaust back pressure, shall detect if engine combustion exhaust back pressure and/or PER operating temperatures comply with and/or exceeds engine and PER Manufacturer's recommendations. The alarm status shall also be reported on the engine Generator Remote Annunciator Panel (EGAP) and the engine generator internal control panel.

5. Provide a permanent sign on the engine generator fuel input port and each related fuel storage tank, minimum ¼-inch high block letters:
   "Warning this engine is equipped with an engine exhaust particulate combination filter/ catalyzer. Diesel fuel for this unit shall be Ultra Low Sulfur Diesel fuel (ULSD), maximum of 15-PPM sulfur content or less, as measured by weight. The fuel shall be CARB Tested and Certified. Damage to the equipment and failure to operate may occur if the correct ULSD/ CARB fuel is not used!" ***ADD-2***
6. PER systems requiring the addition of additives to the engine postproduction fuel supply are not acceptable.
7. Standby Emergency Unit Operation with Emissions Particulate PER Filter
   a. Standby Engine Generator Load Factor with PER Particulate PER filter. The particulate emissions shall not exceed AHJ requirements, but in no case shall particulate emissions exceed the following:
      1) The engine combustion air exhaust (discharge) shall not exceed particulate emissions of 0.01 grams/Bhp-HR (engine brake horse power each hour) at all engine generator load factors.

D. Enclosure and Mounting
1. Spring type, vibration/seismic isolators, with a one-gravity lateral (horizontal) acceleration withstand rating seismic earthquake restraints. The install location of the engine generator shall be included in selecting the correct isolators, for example the seismic forces on the roof of a building are substantially greater then seismic forces at ground level.
2. Radiator, engine and alternator shall be mounted on a twin steel "I" beam base. Base shall be suitable for lifting, hoisting, or skidding of the entire unit into installation position.
3. The engine generator shall be completely housed in a NEMA 3R outdoor rated weather-protective metal enclosure ~~NEMA 1, indoor rated protective metal enclosure~~. The generator housing shall be attached to and mounted on the same skid steel frame "I" beam base as the engine generator. Provide at least four hinged, removable side access doors and rear hinged control panel access doors. Provide locking hasps on all access doors. Engine exhaust silencer shall be side inlet type, mounted on top of housing and terminate with rain cap. Engine exhaust transitioning through housing shall be provided with a suitable rain shield to prevent water from entering the housing. ***ADD-2***
4. Engine generator unit and housing shall have a Manufacturer's standard weather protective finish paint color, applied over a rust inhibitor prime coat on all exposed and concealed surfaces.

E. Engine Combustion Air
1. Engine combustion air intake silencers to limit the air intake noise to less than the engine exhaust silencer noise level.
2. Replaceable, dry element, heavy duty, intake combustion air filters.

2.8 LIQUID FUEL TANK (SKID BASE MOUNTED BELOW THE ENGINE/GENERATOR)

A. General
1. The fuel day tank for each generator shall be of the self-contained skid base mount type. Tanks shall be completely housed within the generator enclosure. Tank shall be welded metal construction. The fuel tank shall structurally support the weight and provide the anchorage for the complete engine generator assembly, plus a 150% safety factor.
2. Tank finish and color to match generator finish and color. Interior of fuel tank shall be epoxy coated. The exterior bottom of the tank shall be provided with additional layer of anti-rust coating.
3. The fuel tank holding capacity shall provide a minimum of twenty-four (plus 10% additional reserve) hours of continuous full load engine generator operation. Approximately 10% of fuel shall remain in tank to prevent fuel fouling and loss of fuel suction priming. Provide fuel filler neck with locking removable cap. The filler shall extend outside the engine generator enclosure.
4. The maximum height addition to the engine generator unit caused by the skid base mount tank shall not exceed 15-inches. The fuel tank footprint shall not extend beyond the engine generator/radiator footprint.

5. Tank shall be provided with 2-fuel level detection switches and floats, low level engine shut down (set at approximately 10% fuel remaining to prevent fuel fouling of engine) and low level pre-alarm (set at 90-minutes remaining fuel) prior to shut down. Provide fuel level float activated "sight" gage. Provide threaded connection points on the tank for auxiliary fuel pump/ filter “polish” system.
6. Fuel tank assembly anchoring and attachment shall be designed for Earthquake Seismic Zone 4 with the tank full of fuel, and with the engine generator installed on the tank. The engine generator spring/vibration seismic isolators shall be provided between the engine generator “I Beams” and top of fuel tank.
7. Provided threaded removable insert plugs in all fuel tank line connections.
8. Fuel tank shall have a sump area at the bottom of the tank to collect water and sediment, with “drain-valve” to allow gravity draining of sump-fuel sediment.

B. Rupture Fuel Containment

1. Tank unit shall have rupture basin (double wall construction) with accidental spillage detection alarm contacts. Rupture basin capacity shall be sized at a minimum of 115% of fuel tank capacity. Rupture basin shall have 0.5-inch pet lock valve at the bottom of the basin to drain contents into portable container. Basin shall be enclosed to prevent collection of dust, debris and water.

2.9 LOAD BANKS

A. General

1. Each engine generator set shall have a resistive load bank, which shall operate connected to the generator electric output only under exercising function of the engine generator. The total kW rating of the load resistors shall be not less than 50 percent of the full load output kW rating of the generator to which it is connected, but in no case less than required by Engine Generator Manufacturer to maintain the Unit Manufacturer’s warranty.
2. Load bank shall be housed in a NEMA 3R weather protective enclosure, mounted integrally to the engine on the front of the radiator, and cooled by the airflow across the radiator. Provide air duct metal flanges on the inlet and exhaust sides of the load bank. The load bank housing shall be rust inhibited galvanized steel after fabrication, with Manufacturer's standard finish color finish paint. The load bank's load chamber shall have the physical dimensions coordinated with the radiator's duct flange. The radiator fan's cooling capacity (airflow) and engine standby rating horsepower shall be increased as necessary to prevent excessive static back pressure build up caused by the load bank.
3. The load bank resistors shall be mounted in field removable trays for servicing capability.
4. Resistors shall be constructed of high temperature alloy capable of continuous operation at 1920° Fahrenheit with a melting point of 2750° Fahrenheit and designed to operate at an average of 750° Fahrenheit. The resistors shall be assembled in a three phase array with the phase-to-phase resistor current balanced within 2% and an overall kW tolerance within 5% of its nominal rating.
5. A circuit breaker and load bank connection circuits shall be provided in the engine generator supplying the load bank. The circuit breaker shall be sized at 125% of the full load current of the load bank. Provide fuse protection for each individual load bank section.
6. Provide automatic electric contactors as required to activate load bank in the exercising mode. Provide all control interlocks with the automatic transfer switch as required to provide the following functions: load bank on-line.
    a. ATS exercising timer starts generator and brings load bank on-line.
    b. Exercising function operates for pre-selected period of time with load bank connected at 100% of load bank capacity.
    c. At end of exercise period, and prior to the engine "cool down" run out, the load bank shall be automatically taken off-line.
    d. If utility power outage occurs during the exercise period, the load bank shall immediately be de-energized (under any operating mode) before the emergency load automatic transfer switches change position; generator shall continue to run during the disconnect of the load bank.
    e. Provide a load bank “on-off-automatic” selector switch. The switch shall control the operational function of the load bank. The “on” position shall by-pass automatic operation

and connect the load bank to the engine generator only when the generator is “running” at stabilized voltage output and rated RPM. The “on” switch position shall not override the automatic disconnect of the load bank in the event of an “emergency power” generator operation mode. The “off” position shall by-pass automatic operation, disconnect the load bank and prevent automatic operation of the load bank.

f. Provide red (load bank connected) and green (load bank disconnected) indicating lights with “push-to test” for each load bank step load.

g. Load bank system shall be as manufactured by Load Technology, Inc., La Mirada, California; AVTRON; Simplex or equal.

2.10 DIESEL FUEL AUTOMATIC MAINTENANCE (DFAM)

A. General

1. Automatic, self-contained fuel maintenance system to remove particulates, microbial growths and water contamination in each engine distillate fuel storage system. The multistage filter system shall operate in a parallel pipe connection arrangement with the engine main fuel supply system.
2. Provide fuel chemical treatment, anti-microbial dispersant and preservative fuel additives to the fuel storage system.
3. As manufactured by Fuel Technologies Inc. (http://www.fueltechinc.com); ALGAEX-STS Series (http://www.algae-x.com).

B. Components

1. Fuel filter pump:
   a. 120 volt 60Hz AC self-priming, electric motor driven fuel pump(s), directing the fuel through multi-stage particulate removal filtering and water removal separators, transporting fuel to and from the fuel storage tank.
   b. Pump fuel lift capacity not less than 1.4 gallons per minute at 15-foot head suction lift.
   c. Spurgear, iron casing, Viton sealed, pressure relieve valve, pump construction.
2. Piping connections:
   a. Piping connections for “dirty” fuel suction supply from the engine generator fuel tank sump. Filtered fuel return to the engine generator fuel storage tank fuel return directly to main storage tank bypassing day-tank within 6-inches of the bottom of the tank at the opposite end from the fuel sump.
   b. Provide ball valves on the filter fuel supply and return fuel pipelines, for system isolation and maintenance.
   c. Provide “foot-valve” in the fuel storage tank filter supply line pipe to keep the filter system primed.
   d. Provide one-way flow “check-valve” on the filter return line pipe to prevent fuel back-flow and siphoning.
   e. Thread connection black iron supply and suction pipes, sizes as recommended by Filter Manufacturer, but not less than 1-inch diameter. Flexible line, final connectors to the fuel tank, to isolate vibrations between equipment.
3. Particulate filters
   a. Particulate filters, removable for filter cleaning and replacement. The filters shall remove and trap particulates in the fuel, 2-microns in size and larger, and flow forced through the filters by the filter pumps.
   b. Suction sensors to detect when filters are 75% or more obstructed with trapped particulates and requires servicing/cleaning.
4. Fuel water separator
   a. Trap and remove not less than 90% of the water contaminating the fuel, flow forced through the water trap by the filter pumps.
   b. “See-through” water trap bowel, with water level sensor probe, to indicate when the trap bowel is 75% or more full with removed water and requires servicing/cleaning.
   c. Trap bowel “spin” on and off removable for servicing and cleaning.

C. Controls
   1. Digital electronic controls for the automatic on-off control, monitoring and trouble alarms reporting of the DFAM system.
   2. Alarms shall monitor and annunciate and be reported on the engine generator remote annunciator panel as follows:
      a. High suction (fuel filter clogged).
      b. High water level in fuel water separator trap bowel.
      c. Fuel leak in the DFAM cabinet.
   3. Operator manual controls.
      a. Operations timer selection and programming.
      b. Alarm indicators and alarm reset.
      c. Suction gauge.
      d. Manual override stop-start control.

D. Cabinet
   1. Self-contained Metal Cabinet Manufacturer's standard finish and color, to contain all of the DFAM components.
   2. Tamper-resistant NEMA-4X.
      a. Install DFAM cabinet inside the engine generator housing for outdoor locations.
      b. Install the DFAM cabinet for generators with "base mounted" fuel storage tank at engine generator on floor support brackets/pipe for indoor generator room locations. Engine generators with freestanding day-tank fuel storage; install the DFAM cabinet at the respective fuel day-tank location on floor support brackets/pipe. Mounting height to prevent fuel siphoning.
      c. Provide fuel pipes, power and control conduit/wire connections.
      d. Complete the installation of chemical fuel treatment additive to the fuel storage tank after all engine generator testing and acceptance is completed.

PART 3 EXECUTION

3.1 ENGINE-GENERATOR TESTS

A. General
   1. Before delivery to the site, the engine generator assembled unit shall be given a preliminary operation and load test. The test shall be performed by an approved independent Testing Laboratory. The tests shall include full load test with a load bank of adequate capacity and shall assure performance of all specified function to the satisfaction of the Owner's Representative. Upon completion of the preliminary tests, the unit, complete with equipment, shall be delivered and installed at site. Provide four copies of complete test records. A copy shall be framed and mounted in the unit by the Contractor. All shop load tests shall be run at 80% lagging power factor.
   2. Upon completion of the installation work, including the electrical connections, and grounding of equipment and neutral, the Contractor shall provide all necessary facilities, fuel, instruments and equipment, including full capacity load bank required for the load tests, and arrange for final test runs. Field tests to be run at unity power factor with Contractor provided unity power factor load bank and fuel.
      a. Generator shall start and pick up full load at normal voltage and frequency within eight seconds, from a cold start (no pre-running within the previous 12 hours prior to the test).
      b. Load test at 0, ¼, ½, ¾ full load and 105% overload until readings are constant for 10 minutes duration for each.
      c. Four 2-hour duration 100% continuous full load test conducted consecutively with the above test.
   3. Readings required during all tests shall be taken on recently calibrated laboratory instruments as well as those on the equipment and shall include not more than 15-minute intervals during the test period including initial start and at final conclusion prior to shutting down for the following:
      a. Output frequency.
      b. Output voltage.

c. Load current.
d. Load watts and volt-ampere
e. Ambient temperature.
f. Engine, coolant temperature.
g. Radiator and engine exhaust air temperatures.
h. Generator frame temperature at hottest spot.
i. Engine lubricating oil pressure and temperature.
j. Frequency and voltage tests shall include a record of response time recovery from load changes.
k. All adjustments, replacement of unsatisfactory equipment, and retesting shall be made by the Contractor's at the Contractor's own expense.

4. Before acceptance of the equipment, the Contractor shall instruct the Owner's Maintenance Personnel in the Operation and Maintenance of this equipment. Four complete written instructions manuals, operating schedules, parts, lists, blueprints, wiring diagrams, maintenance and repair manuals, Engine and Generator Specifications including actual performance curves shall be submitted to the Owner's Representative before final approval.
5. Perform tests as specified and as requested by the Owner's Representative to prove installation is in accordance with Contract requirements. Perform tests in presence of the Owner's Representative, and furnish all test equipment, facilities, and Technical Personnel required to perform tests.
6. Provide full fuel tank fuel supply, prior to transferring acceptance of the engine generator after completion of tests.

B. Commissioning (Additional Requirements)

1. Setup, testing, startup, and Commissioning shall be performed by Factory Technician(s) trained, certified and authorized by the Equipment Manufacturer. Final Commissioning shall be performed after installation and connections are complete.
2. Simulate normal source power failure by opening (turn-off) building main service disconnect and verify connections and operation of each electrical system device connected to the engine generator system on both normal power source and emergency power sources. Simulated test time duration for operating connected on the emergency systems shall be not less than 120 continuous minutes without failure or anomalies in the system operation.
3. Record and document electrical demand load and sequence of operations on the engine generator system with all connected loads operating, including but not limited to:
   a. Fire alarms
   b. Egress/exit lighting
   c. Doors
   d. Auto-loading and overload shedding controls
   e. Fire sprinkler pumps.
   f. Elevators.
4. Provide system programming and setup of all control sequences and related equipment including but not limited to:
   a. Automatic Transfer Switches (ATS)
   b. Lighting control system
   c. Fire alarm
   d. (HVAC)
   e. Fuel transfer/storage
   f. Elevators.
   g. Other Non-Code mandated electrical loads.
5. Test all control system functions after the installation and connections are complete and the system has been energized. Verify each control sequence of operation and each device to be controlled are each operating correctly.
6. Record and document each device setup and program setting.
7. Submit written report (six copies) to Owner's Representative Certifying Commissioning has been performed; all respective systems are operating correctly and document all software setup and each device settings.
8. See General Commissioning Requirements Section 019113 for prefunctional and functional testing requirements.

3.2 GENERATOR INSTALLATION

A. General
   1. The engine-generator shall be mounted on Seismic Zone-4 rated spring isolators and anchor bolts having telescopic top and bottom housing with vertical stabilizers to resist lateral and vertical forces. Constructed of shatterproof ductile iron per ASTM-A-536 grade G5-45-12, type RJ from California Dynamic Corporation or equal.
   2. Engine generator furnished with a "Skid-Base" fuel tank. The seismic spring anchors shall attached between the fuel tank and engine generator skid-base "I" Beams. The seismic spring anchors shall isolate engine generator vibration from the "skid-base" fuel tank. The skid-base fuel tank shall be anchored to concrete slab for one gravity lateral acceleration seismic earthquake restraint.
   3. Generator engine shall have a crankcase drain pipe that is at least 8-inches from the floor, equipped with a readily accessible positive locking shut-off valve. All units shall have a removable full-length metal drip pan under the engine.
   4. Provide expansion type or cast in place type anchor bolts to anchor generator to equipment slab. Installation shall comply with Seismic requirements of California Code of Regulations Title 21 and Title 24.
   5. Diesel engine fuel shall be Ultra Low Sulfur content (ULSD); CARB tested and certified diesel fuel. Sulfur content shall not exceed 15 Parts Per Million (PPM) content.
   6. Complete all electrical connections, control connectors plumbing and mechanical connections.

3.3 CONTINUOUS MAINTENANCE SERVICE AND PREVENTATIVE MAINTENANCE

A. The Generator Factory Trained Service Personnel shall perform two Field Inspections and Service Maintenance Visits, 4-hours duration each visit excluding travel time, at 6 and 12-calendar months after the engine generator installation connections and testing is complete. The Manufacturer's standard recommended maintenance procedures shall be performed as part of the Contract requirements. A certified and registered letter outlining and describing the maintenance visit work has been completed shall be sent to the Owner's Representative after each visit.

B. The Supplier shall provide documentation of maintaining local 24-hour parts and Factory-Trained Service Personnel within a 200-mile radius of the Project Site with the Shop Drawing submittal.

3.4 ELECTRIC POWER AND CONTROL CIRCUITS

A. General
   1. Provide NEC Class-1, Division-1 explosion-proof conduit fittings and seals on each conduit entering or exiting the engine generator location.
   2. Provide quantity and AWG conductor size/type capacity, circuit conductor "lug" connection landings, compatible with connections shown on the Drawings".
   3. The final conduit/raceway connections to any part of the engine generator from any "fixed" location entrance to the engine generator shall be made with liquid-tight flexible raceway. The raceway shall be UL label and approved for use in the atmosphere environment at the engine generator, shall be oil and fuel resistant.

B. Additional Conduit Homeruns
   1. Provide the following minimum quantity and size conduit and wire, to connect each emergency generator, controls and annunciators. Install the conduit and wire from each engine generator to the respective monitoring and control equipment. Refer to Drawings for additional requirements. Install conduit underground and/or concealed in building structure at all locations.
      a. 1.25-inch conduit - 3#10 and 8#14 to each automatic transfer switch. Engine stop-start controls, overload shedding, engine exercising control, and monitoring.
      b. 1.5-inch conduit - 18#14 and 3#10 to remote engine generator annunciator panel.
      c. 2.5-inch conduit - 4#1 and 1#6 ground, feeder from each engine generator CPP panelboard to the remotely located emergency control power panel/switchboard source, 208/120 volt (life safety branch). Provide a subfeed 70 amp 3-pole circuit breaker (100

amp 3-pole for generator units exceeding 200kW) in the remote panel/ switchboard and connect to the CPP feeder. Refer to Drawings for additional requirements.

d. 1.5-inch and 1-inch conduits - 4#4 and 7#14 respectively to engine generator engine fuel transfer pump control system, fuel storage system, fuel leak detection system and the engine generator CPP panelboard.
e. Two 1-inch conduits 4#10 and 7#14 respectively to engine generator engine fuel "day tank" control system and leak detection system.
f. Branch circuit conduit/wire for CPP panelboard connections to generator lighting, receptacles, engine block heaters, alternator anti-condensation heater, fuel day tank pumps, battery charger, etc.
g. Generator load output feeder circuits.
h. 1.25-inch conduit with 8#10 to main fire alarm control panel, generator "run-fail-ready" monitoring and emergency "run-stop" bypass controls from the fire alarm control panel location.
i. 1-inch conduit with 5#10 to each respective engine generator emergency shutdown control station.
j. 1-inch conduit with 6#10 to each elevator controller, for initiation of emergency power, elevator-recall function.
k. Two 1.5-inch conduit to each automatic transfer switch, with engine generator control circuits for momentary parallel synchronized operation of the engine generator with the Electric Utility Company incoming electric service. Circuit conductor quantity and type as recommended by Manufacturer.

C. Control Power Panel

1. Provide a tamper resistant Control Power branch Circuit Panelboard (CPP) installed at each engine generator. Panel shall be in a NEMA-4x enclosure. Panel rating shall be 100 amp bus 208/120 volt, 60Hz AC, three phase, 4 wire. The panel shall contain a 70 ampere, 3-pole 100 ampere, 3-pole for generator units exceeding 200kW main circuit breaker; six 20 amp single pole branch circuit breakers; three 15 amp single pole branch circuit breakers; one 30 ampere 3-pole branch circuit breakers; and two 50 amp, 3-pole branch circuit breakers for the engine block heaters. Provide control power branch circuit conduit and wire connections from CPP to respective engine generator components, including but not limited to; the engine starting battery charger; engine block heaters; fuel monitors and transfer pumps; engine lighting and power systems. The CPP-panel shall be surface mounted on or inside the engine generator, unless indicated otherwise on the Drawings. CCP Mounting height shall not be less than +24-inches above finish grade to panel bottom, or exceed +78 inches above grade to panel top.
2. Provide two 120 volt 20 amp duplex convenience weatherproof receptacles adjacent to the CPP panel installed in a surface mounted cast metal outlet box. Connect to CPP 20 amp branch circuit breaker, with 0.5-inch liquid-tight flexible metal conduit with 3#12.
3. Provide sealed and gasketed vapor-proof nonmetallic housing lighting fixtures inside the generator enclosure. Each lighting fixture shall contain two 9 watt or one 13 watt compact fluorescent lamps with internal solid state low temperature electronic lamp ballasts. Provide not less than the following quantity of lighting fixtures, spaced equally within the housing. Connect to CPP panel 15 amp branch circuit breaker, with 0.5-inch 3#12 liquid tight flexible metal conduit. Provide one S.P.S.T. "on-off" vandal proof lighting control switch in cast metal outlet box.
   a. 200kW and smaller engine generator, quantity of four lighting fixtures.
   b. Over 200kW engine generator, quantity of eight lighting fixtures.

END OF SECTION 263215

082417/1010006

SECTION 263353
UNINTERRUPTIBLE POWER SUPPLY - UPS

Revised, Addendum #2, 09/01/2017

PART 1 GENERAL

1.1 WORK INCLUDED:

All labor, materials, appliances, tools, equipment, facilities, transportation and services necessary for an incidental to performing all operations in connection with furnishing, delivery and installation of the work of this Section, complete as shown on the Drawings and/or specified herein. Work includes, but is not necessarily limited to the following:

A. Examine all other Sections for work related to those other Sections and required to be included as work under this Section.

B. General Provisions and Requirements for Electrical Work.

1.2 SUBMITTALS (ADDITIONAL REQUIREMENTS)

A. Submit Detailed Shop Drawings including Dimensioned Plans, elevations, details, schematic and point-to-point wiring diagrams and descriptive literature.

B. Submit Transformer Test Reports.

C. System Configuration with Single Line Diagrams, show both internal and external wiring connections on Single Line Diagrams.

D. All Circuit Breakers and Fuses shall be identified by location, frame size, trip rating and Manufacturer with type number, terminal locations and interconnect wiring diagrams. Submit engineered settings for all UPS adjustments, protection devices, time-outs, alarm pickup-dropout, software controls etc.

E. Size and Weight of Individual Shipping Units, weight dimensions and heat dissipation of each unit.

F. Detailed Descriptions of Equipment to be furnished, including all deviations from the Contract Document requirements.

G. Detailed Layouts of all metering, alarm and mimic panels. Monitoring and metering sensing points shall be shown on the single line diagram.

H. Short Circuit, Coordination and Arc-Flash (Additional Requirements)

1. Perform and submit engineered settings for each equipment location, fuse and adjustable circuit breaker device, showing the correct time and current settings to provide the coordination within the limits of the specified equipment, per the latest applicable standards of IEEE and ANSI. Provide electrical system short circuit fault analysis, both 3-phase line-to-line and 1-phase line-to-ground calculations as part of the Coordination Analysis recommendations. Provide Electric Arc-Flash calculations as part of the Coordination Analysis recommendations.
2. The information shall be submitted in both tabular form and on time current log-log graph paper, with an Engineering Narrative. Written narrative describing data, assumptions, analysis of results and prioritized recommendations, six copies.
3. The goal is to minimize an unexpected but necessary electrical system outage and personnel exposure to the smallest extent possible within the fault occurrence location, using the specified Contract Equipment. Shall comply with, but not limited to:
   a. IEEE-242, Recommended Practices for Protection and Coordination of Industrial and Commercial Distribution.
   b. IEEE-399, Recommended Practice for Industrial and Commercial Power System Analysis.
   c. IEEE-1584, Guide to Performing Arc-Flash Hazard Study.
   d. CEC

I. Seismic Earthquake and Wind Loading Withstand, Testing and Certification (Additional Requirements).

1. The complete Uninterruptable Power System assembly; including circuit protection devices, inverters, batteries, housings/enclosures, accessories, supports/anchors etc., shall be designed, manufactured and tested.
   a. Wind loading all outdoor equipment locations.
   b. Earthquake Seismic requirements of CBC Seismic withstand all indoor and all outdoor equipment locations.
2. Shall withstand, survive and maintain continuous non-interrupted energized operation during the seismic event occurrences and wind event occurrences. Continued normal energized operation after the wind event and seismic event occurrences have abated.
3. Shall include demonstrations of successful operation and run test after completion of seismic event shake-table simulation. Acceptance Test Seismic Qualification of proposed UPS equipment shall employ triple axis shake-table simulation of the Required Response Spectrum (RRS) Seismic event motion, Certified and Approved by the AHJ.
4. Provide three dimensional finite element analysis demonstrating anchorage and operational withstand of wind loading not less than as follows and as required by AHJ:
   a. 100MPH-West Coast States USA, California, and Hawaii.
5. Seismic test shall be performed by a third party independent Test Laboratory. Wind Analysis and Seismic Testing and Reports shall be Certified, Signed and "Stamped" by PE Professional Engineer Licensed and in good standing in the State, Civil Engineer or Structural Engineer.

1.3 GENERAL

A. Description

1. Each Uninterruptible Power Supply (UPS) system shall provide online double conversion, continuous operation, solid state static, uninterruptible electric power supply and distribution. The UPS shall function as an active electrical power source, electrical power conditioning and active control system in conjunction with the following:
   a. The facility normal (utility) incoming services electrical supply source or sources.
   b. The Direct Current (DC) bus UPS input source.
   c. The facility electrical loads connected to the UPS output
2. The UPS shall automatically provide continuity of electric power within specified tolerances to the UPS output loads, without interruption, including during failure or deterioration of the normal input power supply. Continuity of electric power to the load shall be maintained for an emergency time period with the UPS supplied by battery power up to the specified time and during restoration of the normal utility/ generator power supply.
3. The UPS shall provide 100 percent continuous conditioned; uninterrupted electric power of the specified limited duration for any combination of linear and nonlinear UPS output loads shown connected to the UPS.
4. Each UPS shall consist of a converter; DC input bus/charger and battery system; solid state inverters; maintenance bypass transfer circuit; controls and monitoring systems; synchronizing systems; circuit protective devices; operating software, and equipment enclosures.
5. UPS Sold State Electronic Components
   a. Digital-Signal-Processing using Pulse-Width-Modulation (PWM) of all UPS control and monitoring functions. Converter and inverter modules shall use Insulated-Gate Bipolar Transistors (IGBT).
6. UPS shall be suitable and recommended by the Manufacturer for operation on normal utility electrical input power and/or standby engine generator supplied input electrical power.
7. The UPS shall protect and correct the electrical supply to loads connected to the UPS resulting from electrical power failures, power sags, over voltages and power surges, frequency variations, brownouts, bidirectional electrical noise, bidirectional high voltage spikes/lightning, bidirectional switching transients, bidirectional harmonic distortion.
8. UPS internal power supplies for UPS controls and fans shall be redundant "hot-swappable" without affecting or disrupting UPS output loads if one power supply fails or is removed for maintenance. Provide power supply failure alarm.
9. UPS equipment shall all be the product of the same Manufacturer.

a. UPS units, limited to the following pursuant to direction from Owner. As manufactured by Eaton; or APC/Schneider Electric.

B. Standards and Codes

1. The UPS shall be Certified to conform, to be designed and to be manufactured to comply with the following Standards and Codes:
   a. Underwriters Laboratory – UL 1778
   b. Canadian Standards Association – CSA 22.2
   c. International Electrotechnical Committee – IEC Semiconductor Converter Standards
   d. International Organization for Standardization – ISO 9001
   e. California Electrical Code – CEC
   f. Federal Communications Commission – FCC Part 15 Subpart-J, Class-A for conducted and radiated noise
   g. Institute of Electrical and Electronic Engineers – IEEE 587, Category A and B.
   h. National Electrical Manufacturers Associates – NEMA PE-1
   i. American National Standards Institute – ANSI 62.41
   j. EIA/TIA – 568B
   k. Local applicable Standards and Building Codes

PART 2 PRODUCTS

2.1 DESCRIPTION AND OPERATION

A. UPS System Operation

1. The UPS shall operate continuously at described capacity and performances as a continuous on-line automatic system in the following modes to supply rated voltage and kVA output to the UPS connected loads.
2. Modular configuration, providing incremental UPS electrical load and battery capacity expansion of the initial UPS capacity installation.

B. Normal Mode

1. The UPS inverters continuously supplies output to the loads connected to the UPS. Convert the UPS normal input voltage to regulated DC voltage for input to the inverter and simultaneously supply regulated DC as a float charge to the UPS D.C. bus storage batteries.
2. If the DC bus/battery system is disconnected from the UPS for reasons of overload, failure or maintenance of the DC bus/battery system, the UPS shall continue to function and meet all of the specified performance characteristics, for the connected output loads, except the normal input source power outage back-up time capacity for the DC bus/batteries.

C. Emergency Mode

a. Upon failure of the normal input power to the UPS, the inverter shall derive its input from the DC bus UPS battery system and provide continuous uninterruptible power to the loads connected to the UPS output. The transition from UPS normal input power to UPS DC bus battery system shall be accomplished without any switching or coupling and without any interrupting of power to the loads connected to the output of the UPS as a result of either a failure or restoration of the normal input source power to UPS.

D. Recharge Mode

1. Upon restoration of stable nominal normal input power to the UPS, the converter shall automatically reactivate and provide regulated DC voltage for input to the inverter and simultaneously supply regulated DC recharging of the DC bus UPS storage batteries. The recharge process shall occur automatically and without any interruption of the full load output to the loads connected to the UPS.
2. Trickle charge maintain battery recharge with a trickle charge and float charge to full 100 percent battery capacity. Provide equalizing voltage charge to batteries controlled by the UPS control system.

E. Maintenance – Bypass Mode

1. "Make before break internal bypass switch to provide bypass of normal input power around the UPS to the UPS output loads. The maintenance bypass shall provide electric isolation of the UPS from the UPS normal source input power, the D.C. input bus; inverters/chargers; static switch; and the UPS output loads, without any interruption (make before break) of power to the UPS output loads.
2. The maintenance bypass system shall connect the UPS output loads to:
   a. The same UPS normal input power source as the UPS
3. The maintenance bypass system shall automatically insure the bypass input source and load output are synchronized prior to permitting bypass mode operation.
4. The bypass system shall provide for a procedure to electrically and physically isolate the bypass system from the input sources, load output and UPS/inverters – chargers – batteries when the UPS is supplying the output load.
   The isolation shall allow, without any interruption to the output load, inspecting, testing, repair, removal/reinstallation of the maintenance bypass system components, without any possibility of contact with the energized UPS/inverters – charger – batteries and output loads.
5. The UPS/inverters – charger – battery systems shall be electrically isolated and physically separated from the UPS maintenance bypass systems; the input sources; the load output, when the UPS is in the bypass modes. The isolation, without any interruption to the output load, shall allow inspecting, testing, repair, removal/ reinstallation of the bypassed components of the UPS without any possibility of contact with the energized UPS maintenance bypass system components and output loads.

2.2 DEFINITIONS

A. Uninterruptible Power System (UPS) - All components within the UPS module cabinet(s), separate battery cabinet(s), load output and bypass modules which function as a system to provide continuous, conditioned AC power to a load.

B. UPS Module Cabinet - Metal enclosure(s) which contain the rectifier/charger, the inverter, the maintenance bypass switches, the external operator controls, and the internal control system required to provide specified AC power to a load.

C. Battery Cabinet - Metal enclosure(s) which contain maintenance free sealed batteries sufficient to maintain UPS output according with the specifications and a battery disconnect circuit breaker.

D. UPS Module - The rectifier/charger and inverter units which, under the supervision of the internal control system and external operator controls, provide specified AC power to a load.

E. Rectifier/Charger - The UPS component which contains the equipment and controls necessary to convert input AC power to the regulated bus power required for battery charging and for supplying power to the inverter.

F. Inverter - The UPS component that contains the equipment and controls necessary to convert DC bus power from the rectifier/charger or the battery to AC power required by the UPS connected output load.

G. Internal Control System - The signal processing circuits which regulate the power conversion processes, detect fault conditions, and control the sequence of operation of the UPS. This term may be shortened to "control system".

H. Operator Controls - The controls, which are used by the operator to monitor and operate the UPS.

I. Maintenance Bypass – the automatic operation device that connects the UPS output load to the UPS input source when the UPS Module and Bypass cannot supply continuous power.

J. Automatic Bypass Static Transfer Switch - The device, which connects the UPS output load to the static bypass line when the UPS Module cannot supply continuous power.

K. Maintenance Bypass Line - The line, which connects electricity directly from the input power to the UPS connected output load during maintenance or whenever the UPS is not operational.

L. Input Power Source - Power provided by the normal utility power source or auxiliary emergency standby engine generator source, which is connected to the input of the UPS.

2.3 ELECTRICAL PERFORMANCE CHARACTERISTICS

A. General
   1. Grounding:
      a. The UPS output load neutral shall be electrically isolated from the UPS input source neutral, when the UPS is operating in the normal mode.
      b. The UPS shall be provided with equipment ground terminal bus and neutral terminal bus on each incoming source line side and load output side.
      c. Provide for bonding the UPS load output system neutral bus and ground bus to the incoming source line side neutral bus and ground bus when the UPS is in the Bypass Modes.
   2. The UPS shall comply with US Government Agency FCC – Class A RFI requirements for all operating modes.
   3. Input voltages, output voltages, kVA/kW output load rating and phase configurations as shown on the Drawings and specified herein.
   4. UPS - Electrical voltage capacities
      a. UPS normal input source lineside voltage 208/120-volt - 3 phase, 4 wire, 60Hz AC grounded.
      b. UPS Maintenance-Bypass input source line side voltage, 208/120 volt - phase, 4 wire, 60Hz AC grounded.
      c. UPS output load voltage 208/120 volt - 3 phase, 4 wire, 60Hz AC grounded.
      d. Refer to Drawings for additional information.
   5. UPS - Electrical load capacities
      a. UPS initial output full load capacity as indicated on Drawings.
      b. UPS modular full load output future expansion capacity up to additional 150-percent.
   6. UPS - Electrical load operating DC bus battery capacity continuous time duration at full rated output load not less than 30-minutes.

B. UPS Normal Mode Input (Line Side Source) AC Sinewave, for Constant Rated Output
   1. Voltage range tolerance without any DC bus battery discharge or transfer to Bypass Modes: ± 15 percent
   2. 60HZ AC frequency range tolerance without any DC bus battery discharge or transfer to Bypass Modes: ± 5 percent
   3. Reflected input power factor shall never exceed 1.0 (unity) when operating in the Normal Mode or Recharge Mode
      a. At 100 percent load — 0.92 lagging, minimum
      b. At 50 percent load — 0.85 lagging, minimum
      c. When operating in the Bypass Modes the reflected power factor shall track UPS load power factor.
   4. Maximum reflected Total Harmonic Distortion (THD) including UPS load contributions
      a. At 100 percent load — 7 percent
      b. At 50 percent load — 10 percent
      c. When operating in the Bypass Modes the reflected THD shall track the UPS load THD.
   5. Total UPS Efficiency when operating in any mode, including input/output isolation transformer losses:
      a. At 100 percent load — Greater than 92 percent
      b. At 50 percent load — Greater than 89 percent
      c. UPS efficiency shall be the measured output KW divided by the measured input kW; with a connected load power factor of 0.8 lagging and the DC bus batteries fully charged operating on-trickle float charge.
   6. Maximum magnetizing in rush current:
      a. 1.0Hz maximum or less duration – six times normal fullload input current
   7. Input Source Load Limits
      a. The UPS shall limit the total normal source input load of the UPS to a value not to exceed 130 percent of the UPS continuous output kVA full load rating.

b. The input source load limit value shall include the UPS DC battery recharging loads, DC battery trickle charging loads, UPS full steady state rated output loads and the UPS internal operating losses.

C. UPS Output (Load Side) AC Sinewave

The UPS shall comply with the load output electrical characteristics described below, when the UPS is operating in the Normal Mode, Emergency Mode or Recharge Mode. The UPS load output electrical characteristics shall track the UPS input source lineside when the UPS is operating in the Bypass Modes.

1. Dynamic voltage regulations, from 0kVA to full load rating, phase-to-phase or phase-to-neutral.
   a. Balanced loads ± 0.5 percent
   b. Unbalanced loads ± 2 percent
2. Maximum voltage transient response
   a. 20 percent output load step ± 3 percent
   b. 50 percent output load step ± 4 percent
   c. 100 percent output load step ± 5 percent
   d. Loss or return of AC input voltage ± 1 percent
3. Voltage transient recovery time of rated voltage to within 1-percent, less than 1.0Hz.
4. Voltage Total Harmonic Distortion (THD) not including connected load harmonic distortion contribution.
   a. 100 percent linear load 2 percent
   b. 100 percent non-linear load 5 percent
5. Overload capacity while maintaining voltage regulation within ± 2 percent and while maintaining input source load limits.
   a. 125 percent of full load output for 600 seconds.
   b. 150 percent for 30 seconds.
   c. 200 percent for 20 seconds.
   d. 1000 percent for up to 1-Hz.
6. Manual voltage adjustment ± 5 percent
7. Frequency stability for all specified load conditions, DC bus voltage conditions and temperature conditions
   a. Free running for all load conditions, DC bus voltage conditions and temperature conditions: 60Hz ± 0.1% in a 24 hour period; ±1% in a 6 month period
   b. Maximum slew rate 0.1HZ per second
8. Maximum Phase to Phase frequency Displacement (Imbalance)
   a. Balanced loads 120 degrees ± 1 degree
   b. 100 percent unbalanced loads 120 degrees ± 3 degrees
9. Connected load power factor 20 percent lagging to 130 percent leading for nominal UPS output/input operation.
10. Output synchronization:
    a. The UPS output shall stay synchronized with the automatic bypass input source, if no automatic bypass system is present then maintain synchronization with the manual bypass input source line frequency, provided the static bypass input source line remains within the nominal frequency. Where a bypass is not required to be provided with the UPS, the UPS shall stay synchronized with normal input source.
    b. If the input source line frequency goes outside described limits, the inverter shall break synchronization with the input source line and run on the UPS internal reference frequency. When the input source line frequency returns, within described limits, the inverter output shall automatically re-synchronize with the respective input source line.
    c. The UPS shall be provided with a temperature compensated internal oscillator, to automatically maintain the output load voltage frequency when the input source line voltage frequency exceeds specified limits.
    d. The rate of frequency change (slew rate) shall not exceed 0.1Hz per second.

D. Transient Voltage Surge and RFI/EMI Protection – (TVSS)

The UPS shall comply with the transient voltage surge and RFI/EMI electrical characteristics described below, when the UPS is operating in the Normal Mode, Emergency Mode, Recharge Mode or Bypass Modes.

1. Lightning and Transient Voltage Surge Protection, Electromagnetic Interference (EMI), and Radio Frequency Interference (RFI) Noise Filtering shall be provided for each UPS. The protection shall function during all UPS Operating Modes.
2. Provide EACH of the UPS source inputs and the load output of the UPS with lightning protection, transient voltage surge protection and EMI/RFI protection. The protection shall include functions for common mode and transverse mode; line-to-line (phase-to-phase); each line-to-ground (phase-to-ground); each line-to-neutral (phase-to-neutral) and neutral-to-ground connection protection configurations.
3. RFI and EMI
   a. Conducted line noises interference both EMI and RFI shall be reduced by the UPS over a continuous spectrum of 0.5 MHz to 1.0 MHz.
   b. The basis for reduction shall be a standardized 50 OHM insertion loss MIL –STD-220A Test.
   c. Provide spectrum analysis test, dB attenuation reports showing EMI and RFI filtering over specified frequencies. Test data that is based on calculated or computer simulation is not acceptable.
4. Voltage surge protection:
   a. Phase-to-phase and grounded "WYE" performance requirements

Characteristics	208/120 Volt
1) Nominal line to line	208 Volt
2) Nominal line to neutral	120 Volt
3) Internal capacitance Microfarads)	2.5
4) Maximum response time	1-nanosecond
5) Minimum EMI/RFI noise rejection	35-45 DB
6) Nominal peak clamp voltage line to neutral and line to ground	205 volts

   b. Minimum transient energy dissipation per phase (at 8 x 20 microseconds waveform): 1000 joules
   c. Peak transient withstand (at 8 x 20 micro-seconds wave-form) without failure of unit, ANSI C642.41: 50,000 amp
      1) Category-C3: 80,000 amp
      2) Category-B3: 60,000 amp
      3) Category-A3: 50,000 amp

E. UPS Short Circuit Withstand and Interrupt Ratings (bolted short circuit fault conditions, symmetrical and asymmetrical).

1. UPS line side input sources shall be "fully-rated" for the short circuit current available at the respective input sources of the UPS as described below, but in no case less than shown on the Drawings. "Series-Rated" with upstream devices is not acceptable for lineside input source devices:
   - 240 volts line-to-ground and below – 42,000 ampere RMS symmetrical.
2. UPS internal components shall be "Fully-Rated" or "Series-Rated" to the UPS line side input sources and the UPS load side output, but in no case, less than indicated on the Drawings, and not less than indicated in the time-current short circuit study submittal.
3. UPS load side output shall be "Fully Rated" or "Series-Rated" to the UPS line side input sources, but in no case less than indicated on the Drawings.

F. UPS DC Bus (Battery Source)

1. Maximum D.C. ripple with or without batteries connected to the D.C. Bus
   a. Voltage ± 0.4 percent
   b. Current 2 percent RMS
2. Battery voltage shall not vary beyond the following:
   a. Mutual D.C. bus battery shall not exceed 550 volts
3. The D.C. bus battery, end of discharge shutdown, shall be automatically adjusted by the UPS controls for partial UPS output load conditions, to allow for extended operation without damaging the batteries. Automatic shutdown based on discharge time is not acceptable.

4. Battery recharge time from full discharge to 95 percent recharge shall not exceed 15-times the UPS full load Emergency Mode operating time duration, when the UPS Input Source Load Limit is set at 130 percent.
5. An automatic battery equalize voltage charge shall initiate after the UPS returns to Normal Mode from any other operating mode. The override of equalize voltage and the time duration shall be adjustable from the UPS Control System.
6. The D.C. bus battery "float" charging voltage shall be automatically temperature compensated for the battery ambient temperature as monitored by the UPS.
   a. Approximate voltage adjustment range: ± 25 volt
7. UPS Load Testing of D.C. Bus
   a. Manually initiate from the UPS Control System a reduction of the D.C. bus battery charging voltage to approximately 1.9 volts per cell to force the D.C. bus batteries to carry the UPS load for a limited time.
   b. If a drop in battery voltage occurs indicating diminished battery capacity or battery failure, shall automatically cancel the test and "Alarm" the UPS Control System.

2.4 ENVIRONMENTAL OPERATING CONDITIONS (INCLUDING BATTERIES)

A. General
   1. UPS equipment shall maintain a full UPS load and performance without any derating of UPS operation resulting from the ambient conditions described below.

B. Ambient Conditions
   1. Normal ambient operating conditions:
      a. Temperature – 20 degrees to 30 degrees centigrade.
      b. Humidity – 30 percent to 90 percent non-condensing.
   2. Emergency ambient operating conditions:
      a. Temperature 0 degrees to 40 degrees centigrade.
      b. Humidity 5 percent to 95 percent non-condensing.
   3. Non-operating and storage conditions:
      a. Temperature – Minus 20 degrees to positive 50 degrees centigrade.
      b. Humidity – 0 percent to 95 percent

C. Altitude Normal Conditions
   1. Operate from sea level to 5,000 feet above mean sea level without derating.
   2. Non-operating and storage from sea level to 25,000 feet above mean sea level.
   3. Installation location of the UPS exceeding 5000 feet above sea level. The UPS kW and kVA output load ratings and DC Bus battery capacities shall be increased to compensate for the UPS altitude derating recommended by the Manufacturer, to maintain the specified output load capacities of the UPS.

D. Audible Noise
   1. Noise generated by the UPS under any condition of specified operation shall not exceed a sound pressure level measured at 5-feet from the nearest surface of the cabinet as follows:
      a. Shall not exceed 65dBA.

2.5 UPS ELECTRICAL CIRCUIT PROTECTION, DEVICES AND DISCONNECTS

A. Protection against External Events
   1. The UPS system shall incorporate built-in protection to prevent permanent damage to the UPS and to circuits extending external to the UPS for the following:
      a. Overvoltage, under voltage and overcurrent surges introduced by the primary UPS input sources.
      b. Overvoltage and overcurrent surges introduced on the UPS load output terminals by sources in the load, load switching and fault clearings in the distribution system of the load.
      c. RFI and EMF
      d. Transient voltage and lightning surges.

B. Protection against Internal Events

1. The UPS System (including the batteries) shall have built-in protection against permanent damage to itself and the connected load for all predictable types of failures within the UPS.
2. Protective devices shall be provided for power semiconductors, these devices shall be configured to prevent cascading failures.
3. The operation of any protective device shall be detected and displayed by the monitoring diagnostic system of the UPS Control System.

C. Input and Load Output Circuit Protection Devices

1. Device Types 100 Ampere and Greater Rating
   Multipole gang operated; time overcurrent circuit breakers with field adjustable internal solid state trip protection units, providing long time overcurrent/delay, short time overcurrent/delay and instantaneous current, trip element adjustable settings and electrical “shunt-trip” operation. Auxiliary annunciator and pilot relay contacts to indicate when the respective device is “Open-Closed-or Tripped”.
2. Device Types under 100 Ampere Rating
   Same as “100 ampere or greater” requirements or alternately multipole gang operated molded case circuit breakers with fixed non-adjustable thermal-magnetic overcurrent trip elements, adjustable instantaneous trip elements and electrical “shunt-trip” operation. Auxiliary pilot, relay contacts to indicate when the respective devices is “open-closed-or tripped”.
3. Protection devices shall be rated for true RMS voltage operation with loads containing 100 percent THD harmonic voltage content.
4. Main circuit protection devices for UPS lineside input sources and for load side output shall be motor operated, to allow “on-off” switching control of the protection devices by the UPS Control System.

D. Provide a main circuit protection/disconnect device on each line side input source to the UPS and on each load side output of the UPS. Each device shall be rated for the UPS respective circuit, continuous 100 percent load ampere input/output rating.

1. Main normal utility source input.
2. DC bus battery input source.
3. Each feeder/branch circuit load output.
4. Maintenance bypass input source and load output.

E. Output Load Branch Circuit Protection

Provide individual branch circuit feeder load side output circuit protection devices for each load connection to the UPS shown on the Drawings. Each device shall be rated to supply the continuous 100 percent load ampere of the respective connected load without derating.

F. Emergency Power-Off Controls (EPO)

1. The UPS shall be provided with the means of turning off the UPS and disconnecting power to all the UPS input source(s) and the output load both locally and remotely.
   a. Locally - By a single operator switch.
   b. Remote - By the opening of an external customer supplied normally open or normally closed pilot relay contact.
2. Battery fused disconnect switches for manual on-off control of battery output, rated for battery disconnect ampere capacity.
3. UPS equipment “emergency-shutdown” pushbutton key/switch to shut down and disconnect from the UPS all input sources, shut down and disconnect all output loads from the UPS and shut down the entire UPS system. Locate shut down on the UPS equipment.
4. In addition to the UPS “emergency-shutdown” pushbutton located on the UPS, provide a remote UPS “emergency-shutdown” pushbutton for each UPS at each location shown on the Drawings, but in no case less than one remote pushbutton for each UPS, located at each door that provides access into the room occupied by the UPS.

G. Over Temperature Protection

1. Provide internal temperature sensors to monitor temperature of critical UPS components. Upon detection of temperatures in excess of Component Manufacturer's recommended ambient working temperature, the sensors shall cause audible and visual alarms to be indicated on the UPS Control Panel.

2.6 BATTERIES

A. Battery
   1. Storage battery unit(s) shall be furnished for the UPS with sufficient capacity to maintain 100 percent full load operational characteristics and duration in a 25 degree centigrade ambient temperature as specified herein, plus not less than a 5-percent spare reserve capacity.
   2. Battery cell caps shall incorporate hydrogen gas catalytic converter to reduce hydrogen out gassing during battery cycling.
   3. The batteries shall be the maintenance free sealed type.
   4. The battery containers shall be impact-resistant plastic. Each battery shall be designed for a 10-year life, when maintained under UPS full float charge operation as recommended by the Battery Manufacturer.
   5. The batteries shall comply with and be tested per ANSI-N45.2 and MIL-I45208A.
   6. The battery cell containers and covers shall be a flame-retardant material; all cells exceeding 0.25 KW per cell storage capacity shall include an integral flash arrestor.
   7. The battery load circuit connection terminals shall be rated for the UPS D.C. bus, Recharge Mode, Normal Mode and Emergency Mode operating voltage and current.
   8. Battery type:
      a. The battery cells shall be lead-calcium type characteristics, VRLA type.

B. Battery Cabinet
   1. All the cells making up the battery shall be installed in a freestanding cabinet, of the same construction as the UPS module cabinet. Battery shelves shall support and organize the batteries and D.C. wiring inside the battery cabinet. The cabinets shall all be of the same height and depth as the other UPS cabinets.
   2. Each battery cell shall be held in place to prevent movement during seismic event, as required for Seismic Earthquake Restraints at the location of installation.

C. Battery Disconnect Circuit Breaker
   1. Provide each UPS Unit with a DC-battery main circuit breaker. This circuit breaker shall be mounted between the battery output bus and UPS D.C. input bus. When the circuit breaker is open, there shall be no battery voltage present in the UPS module cabinet.
   2. The UPS Module shall be automatically disconnected from the battery by opening a motor operated circuit breaker or contactor, when the battery reaches the minimum discharge voltage level or when signaled by other UPS Control Functions.
   3. Disconnect shall be rated 600 volt D.C. operation, ampere rating equal to D.C. bus ampere rating and not less than 125 percent of the maximum DC Bus ampere flow.

D. All battery wiring shall be 600 volt insulated copper conductors.

2.7 CONTROL AND MONITORING

A. General
   1. All of the operator controls and monitors shall be located on the front of the UPS Module cabinet.
   2. Voltage, current, power, frequency and temperature parameters shall be measured and monitored using true RMS values, within $\pm$ 1 percent accuracy.
   3. Provide an annunciator lamp push-to-test button to test all annunciator lamps and audible alarms.

B. Controls
   1. The startup, shutdown and bypass operations shall be accomplished by a single control switch that will indicate when and in what direction the control switch should be turned.
   2. Pushbuttons shall be provided to display the status of the UPS. Pushbuttons shall also be provided to silence, test, set and reset visual and audio alarms.

C. Instrumentation for UPS Units
   1. The following alphanumeric digital metering/monitoring information shall be monitored and displayed. A high value alarm, low value alarm and pre-alarm set points shall be field programmable for each metering/monitoring value and maintained in non-volatile UPS storage

memory for recall display from memory. Analog to digital converters, current transformers and potential transformers for each instrumentation function shall be provided as part of the UPS system.

2. Each input source and the load output AC-voltage, AC-amperes and total harmonic distortion, line-to-line and line-to-neutral for each phase for:
   a. UPS module.
   b. Each UPS bypass unit.
3. Each input source and the load output-AC power factor, load capacity percentage; AC-frequency, AC-KW and AC kVA for:
   a. UPS module.
   b. Each UPS bypass unit.
4. DC battery bus:
   a. Battery operating capacity and remaining capacity during battery operation.
   b. Total UPS operating time of DC Bus source battery.
   c. DC voltage and ampere.

D. Status and Alarms for UPS Units

1. The following alarms shall be displayed, an audible alarm shall activate when any of the following alarms occur. A visual alphanumeric display or pilot light annunciator shall display each condition. The time, date and duration for each status and alarm shall be maintained in non-volatile UPS storage memory, for recall display from memory. Analog to digital converters, sensors and transponders to sample and monitor each condition shall be provided as part of the UPS system.
2. Power-On, Power-Off and Power-Failed for each input source and load output (AC and DC sources).
3. DC bus
   a. Battery discharging.
   b. Low/high DC Bus voltage.
   c. DC Bus ground fault.
   d. Low battery reserve shutdown.
   e. DC Bus batteries disconnected.
4. UPS loss of synchronization.
5. Temperatures
   a. Equipment over temperature; pre-alarm shutdown.
   b. Over temperature shutdown.
   c. Cooling fan failure.
   d. Battery over/under temperature.
6. UPS Control Power failed.
7. Each source input and load output:
   a. Over, under voltage and loss of voltage.
   b. Over and under frequency.
   c. Overload warning and shutdown.
8. UPS circuit breakers and circuit protection devices disconnect or fuse open.
9. Rectifier/charger failure.
10. Each UPS Bypass Mode:
    a. Load operating on bypass.
    b. Bypass input source not available/disconnected.
    c. Bypass disabled.
    d. Incorrect Bypass phase sequence.
    e. Bypass input source and load output not synchronized.
    f. Bypass disconnected from the load output.

E. Mimic Panel

1. The mimic panel shall depict a single line diagram of the UPS. Indicating lights shall be integrated with the single line diagram to illustrate the status of the UPS Power paths. The functions whose status is to be displayed shall include, but not be limited to, the following:
   a. Each input sources power available.
   b. Output load power available.
   c. Normal operation.

d. Bypass operation.

2.8 EQUIPMENT DETAILS

A. All materials and parts comprising the UPS shall be new, of current Manufacturer, of a high grade and free from all defects and imperfections that may affect UPS correct operation and shall not have been verified in prior service, except as required during factory testing.

B. All active electronic devices shall be solid state. All semiconductor devices shall be hermetically sealed. All control relays shall be dust tight, visible contact position, “socketed” plug-in type.

C. The maximum working voltage, current and “di/dt” of all solid state power components and electronic devices shall not exceed 75 percent of the ratings established by the respective Manufacturer. The operating temperature of solid state component cases shall not be greater than 75 percent of their ratings. Electrolytic capacitors shall be computer grade and be operated at no more than 90 percent of their voltage rating.

D. Wiring
   1. Access holes with removable coverplates shall be provided on the top, bottom and sides of the UPS and battery cabinets for inter-cabinet wiring and customer installation wiring connections.
   2. All bolted connections of bus bars, lugs and cables shall be in accordance with requirements of the National Electric Code and other applicable Standards. All electrical power connections shall be torqued to the required value and marked.
   3. Provide conductor connection lug landings for lineside input sources, load side output and control system conductor connections to the UPS. Quantity and sizes of conductor lug landings to match circuit conductors and ratings shown on the Drawings.
   4. All energized terminals and conductors landing/lugs shall be insulation shielded to ensure that Maintenance Personnel do not inadvertently come into contact with energized parts or terminals.
   5. Wire runs shall be protected in a manner, which separate and isolate power from control wiring. Provisions shall be made in the cabinets to permit installation of input, output, and inter-cabinet cabling, using raceway or conduits.
   6. Bus for AC line/load voltage current and bus for D.C. current shall be copper; maximum 800 ampere per square inch current density based on 100-percent non-linear loading; continuous extruded insulation over bus with removable insulation “boots” at all screw/bolted bus connections. Bolted connections shall employ “spring-lockwashers”. Silver-plating of bus at all connection locations.

E. UPS Cabinet Housing
   1. The UPS shall be contained in NEMA Type I metal enclosures, with key locking hinged metal access doors.
   2. Enclosures exceeding 400 pounds shall be anchored to the floor, held in place to prevent movement during seismic event, as required for Seismic Earthquake Restraints at the location of installation.
   3. The UPS housing shall be suitable for mounting on a concrete floor or carpeted floor.
   4. The UPS shall be structurally reinforced with provisions for hoisting, jacking and forklift handling.
   5. UPS cabinet housing segregation:
      a. Provide separate cabinet(s) for each UPS modules, bypass modules and battery modules for UPS units.
   6. The UPS cabinets shall be cleaned, primed, and painted with the Manufacturer's standard colors.
   7. Adequate forced air ventilation flowing through each UPS cabinet shall be provided to insure that all components are operated within their environmental ratings.
      a. All ventilation fans shall be equipped with “wind- vane” sensors connected to an alarm annunciator on the UPS control system.
      b. Provide removable replaceable air filters on air-cooling, air-intake vents on UPS units with internal cooling fans. Fans shall be redundant operation.

2.9 REMOTE ANNUNCIATOR PANEL

A. General
   1. Provide a self-contained wall mounted remote annunciator panel to provide individual indication of the UPS Status and Alarm conditions.
   2. The annunciator shall be alphanumeric display.
   3. Provide pushbutton to silence the audio alarm with automatic resound.
   4. Annunciator shall be flush or surface mount as indicated on the Drawings.

B. Status and Alarm Conditions
   1. The remote annunciator shall display the same monitoring, status and alarm information for each UPS as the UPS Control System.
   2. The remote annunciator panel shall provide remote control of the UPS from the annunciator panel with operator “password” authorization protection.

2.10 NETWORK COMMUNICATION

A. Communication Interface
   1. The UPS shall communicate with the facility computer/data network. Provide Simple Network Management Protocol (SNMP) latest revisions and Management Information Base Protocol (MIBP) latest revisions. The UPS SNMP Agents shall comply with Internet Engineer Task Force IETF-RFC1628 basic and advanced levels standards, compliant software with multi-user site license. The software shall provide computer data network communication.
   2. UPS internal network interface card shall provide compatible connection to the network installed at the computer data UPS connection location for "inband" network communication.
   3. Provide "out-of-band" communication through RS-232 or USB modem port connection.
   4. Communication ports shall be based on EIA/TIA – 568B Standard connections 100 BASE-T copper wire and multi-mode fiber optic communication links.

B. The software shall operate on each network server and computer workstation node to provide the following monitoring and control functions:
   1. Automatic unattended shut down of multiple network servers and multiple stand-alone systems, to prevent data loss after failure of the normal power source and prior to exhaustion of UPS battery storage capacity. Automatically save all data to hard disk drives.
   2. Automatic reboot of equipment connected to the UPS power outputs, upon restoration of normal utility power.
   3. Notification of normal power loss with broadcast messages to all network connected nodes.
   4. Automatic logging of power events to the network servers and workstations and UPS internal event storage memory.
   5. Software customizable network shut down and auto boot command sequences, with manager password protection.
   6. Provide an internal database of equipment connected to the UPS and provide variable delayed shut down duration of each connected unit.

C. Install and customize the UPS Software on the Network Servers’ workstations, standalone equipment and UPS Equipment Control System.

PART 3 EXECUTION

3.1 INSTALLATION

A. Installation of the UPS shall be in full accordance with UPS Manufacturer's recommendations. Set and calibrate all adjustable settings as recommended by the UPS Manufacturer. Install and connect the UPS to the input sources and load output circuits.

B. Transparent temporary protective plastic covers of suitable gauge shall be provided during installation of the UPS System to protect the entire UPS Equipment from dust and dirt at all times, except while working on a given module, after which the plastic covers shall be reinstalled. Remove temporary covers prior to placing UPS in operational service.

C. Anchor the UPS cabinet(s) to the building floor and walls and equipment racks as applicable to hold in place to prevent movement during seismic event, as required for Seismic Earthquake Restraints at the location of installation.

D. UPS Communications
   1. Provide complete, copper wire computer data workstation outlet box, and outlet at each UPS location. Provide 0.75 inch conduit with two Category-6A, 4-pair STP twisted pair network data cables complying with EIA/TIA-568B, homerun to nearest computer/data network equipment rack patch panel, or computer data network terminal room closet from each UPS. Provide plug-in RJ-45 connection of UPS to computer data network outlet.
   2. Provide outlet box at each UPS and empty 0.75 inch conduit homerun to nearest telephone backboard from each UPS for voice telephone connection to UPS Controls.
   3. Provide outlet box at each UPS and two 1.25 inch conduit with conductors recommended by UPS Manufacturer, from UPS to each respective remote UPS Annunciator/Control Panel.
   4. Provide outlet box at each UPS and 0.75 inch conduit with 4#14 to each remote EPO.
   5. Install, set-up and test UPS Communications Network and Control Software.

3.2 TESTING AND COMMISSIONING

A. General
   1. UPS equipment and batteries shall be inspected for damage as soon as they are received. Specifically check to see if wet cell batteries have been turned over in shipment and whether the equipment cabinets have received any severe dents which might cause internal damage. Remove and replace all damaged equipment with new undamaged equipment.
   2. Use only the factory provided knock-out areas and conduit entry provisions on the equipment for wiring. Care shall be taken not to let metal slugs or chips get into the equipment cabinet.
   3. Prior to energizing equipment, perform measurements on the incoming and load output AC lines to the equipment to insure that the proper voltage level is available and that there are no ground faults or high potentials between conductors or between phase conductor to neutral/ ground.
   4. Prior to installing the fuses, or closing the circuit breaker in the battery circuit, verify correct battery voltage, polarity markings, battery electrolyte level and all electrical connections are secure.
   5. Prior to turning the system on for any tests, the unit shall be bypassed with the mains connected to feed the load directly and the currents in each conductor measured and balanced. Follow Manufacturer's instructions for installation, connection and energizing equipment.
   6. Batteries which are shipped with the electrolyte in the battery cells shall be maintained on a float charger when not installed and energized, operating in the UPS Unit. Batteries shipped without electrolyte installed in the battery cells shall not have electrolyte added until equipment is installed and ready to be energized. Batteries which are not handled with this procedure will be rejected, shall not be used and shall be replaced with new batteries at the CONTRACTORS expense.
   7. Provide Factory Authorized Field Service Technician factory start-up to Inspect, Energize, Test and Certify the correct system installation, connections and operation. Provide written acceptance Field Service Report, six copies, to Owner's Representative.

B. Provide Full UPS output load capacity and voltage capacity temporary inductive test load banks, 80 percent power factor and perform full load testing of the UPS after the installation is complete and prior to energizing the building system load circuits connected to the UPS. The UPS shall be cycled through two complete charges and discharge cycles with the UPS connected to the temporary load bank. Remove the temporary UPS load bank and complete UPS connections after the successful completion of the UPS Verification and of the UPS Compliance with the Contract Document Testing, Performance Requirements.

C. Commissioning (Additional Requirements)
   1. Setup, Testing, Startup, and Commissioning shall be performed by Factory Technician(s) Trained, Certified and Authorized by the Equipment Manufacturer. Final Commissioning shall be performed after installation and connections are complete.

2. Provide system programming and setup of all control sequences for the UPS Operation and Control System.
3. Simulate normal source power failure by opening (turn-off) building main service disconnect and verify connections and operation of each electrical system device connected to the system on both normal power source and emergency power sources.
4. Record and document electrical demand load and sequence of operations on the UPS System with all connected loads operating.
5. Test all control system functions after the installation and connections are complete and the system has been energized. Verify each control sequence of operation and each device to be controlled are each operating correctly.
6. Record and document each device setup and program setting.
7. Submit written report (six copies) to Owner's Representative Certifying Commissioning has been performed; all respective systems are operating correctly and document all software setup and each device setting.

3.3 FACTORY SERVICE AGREEMENT (FIRST TWO YEARS OF OPERATION) ADD 2

A. General

1. Provide site visits and written reports for each UPS at unit start-up, commissioning, and again approximately 12 months after completion of testing and commissioning and again 12-months from there. Shall be included as part of the Base Contract Scope. **ADD 2**
2. Factory Authorized Technician shall visit site and startup-test all UPS Options, Accessories and Functions, Physical, Electrical and Mechanical Inspection. Simulate normal source power outage and recharge functions.
3. UPS factory remote monitoring and reporting of each UPS Status, using LAN-Network and/or telephone communications line provided by the Owner.
4. The Base Contract initial first-year-operation Service Scope shall be renewable, if mutual agreement between the UPS Manufacturer and the Owner is accomplished for service cost, scope and renew.
5. Provide three copies of Factory Service Proposal renew Agreement to the Owner's Representative.

END OF SECTION 263353
062117/1010006

SECTION 272000
DATA COMMUNICATIONS ACTIVE INFRASTRUCTURE

Added, Addendum #2, 09/01/2017

PART 1 GENERAL

1.1 SUMMARY

A. This Section describes the data communications network infrastructure including electronics and software needed to support Local Area Networks and Network Management.

B. Products Installed Under this Section: Only new equipment and material, produced by Manufacturers that are recognized nationally by the telecommunications industry and approved by Underwriters Laboratory shall be used as specified in this Section or on the Drawings.

1. All mounting hardware
2. All mounting brackets
3. All power cords

C. Related Sections:

1. Division 01
2. Section 230913: Building Management System
3. Section 260500: Common Work Results for Electrical
4. Section 265000: Lighting
5. Section 272126: Structured Telecommunications Cabling and Pathway System
6. Section 273226: Emergency Phones
7. Section 274116: Integrated Audio-Video Systems and Equipment
8. Section 281300: Access Control
9. Section 282300: Video Surveillance

1.2 REFERENCES

A. NEMA – National Electrical Manufacturer's Association

B. ANSI – American National Standards Institute

C. NEC – National Electric Code

D. RSEF – Relevant State Electrical and Fire Codes

E. IEEE – Institute of Electrical and Electronic Engineers

F. UL – Underwriters Laboratories, Inc.

G. ANSI/EIA/TIA – 568A-1995 Commercial Building Telecommunications Wiring Standard.

H. ANSI/EIA/TIA – 568-B-2-1 Transmission Performance Category 6 Cabling Specifications for 4-Pair 100 Ohm.

I. ANSI/EIA/TIA – 569A Commercial Building Standard for Telecommunications Pathways and Spaces

J. ANSI/EIA/TIA – 606 The Administration Standard for the Telecommunications Pathways and Spaces

K. ANSI/EIA/TIA – 607 Commercial Building Grounding and Bonding Requirements for Tele-communications

L. ANSI/EIA/TIA – 598 Color Coding of Optical Fiber Cables

M. EIA/TIATSB – 67 Transmission Performance Specifications for Field Testing of Unshielded Twisted-Pair Cabling Systems

N. BICSI – Building Industry Consulting Service International publications:
   1. Telecommunications Distribution Methods Manual
   2. LAN and Internetworking Design Manual
   3. Telecommunications Cabling Installation Manual
   4. Customer Owned Outside Plant Design Manual
   5. Manufacturer's recommendations and installation guidelines

O. All Cabling shall comply with all appropriate requirements of NEC Articles 770 and 800 and shall comply with the State Fire Codes as interpreted by the State Fire Marshall's Department.

P. All Publications referred to in this document shall be the latest publicized edition.

1.3 SUBMITTALS

A. Product Data
   1. Provide a list of complete current part numbers, product revision levels and confirm with District during submittal phase.
   2. If additional equipment is required to meet Performance Specifications of the system, Contractor shall provide the equipment with District written approval prior to installation.

B. Certificates
   1. Contractor shall carry the appropriate Manufacturer Certification for installation of the Data Communications and Wireless Equipment.
   2. Contractor shall provide Proof of Certification to the District.

C. Qualifications
   1. Contractor shall provide proof of training / certification to the District. The Installing Contractor must be certified with the Manufacturer for at least 12-months prior to the bid.
   2. Contractor shall assign competent person as Project Manager who has demonstrated the ability to supervise a project of similar size and scope. Submit a resume of the proposed Trade Contractor Project Manager for the District's review and acceptance. The Project Manager must attend meetings as required.
   3. Contractor shall provide documentation to the District to demonstrate that it has been in the telecommunications contracting business for a minimum of 5-years under the same name and are located within a 4-hour response time of the District.
   4. Installer shall include BICSI Cabling Installer Certifications for all cabling being installed.

1.4 CLOSEOUT SUBMITTALS

A. Contractor shall provide published escalation and priority handling procedures. This shall include the names and phone numbers, in organizational chart format, of the Technicians and Management responsible for supporting the District.

B. Contractor shall describe its policies and plans to assist the District in the event of a catastrophic disaster to the facilities mentioned in this Section.

C. Contractor shall provide a port map indicating all port locations. The port map shall show the Wall Label and Floor Plan location for each data jack.

D. Warranty and Performance Agreements.

1.5 QUALITY ASSURANCE

Use adequate numbers of skilled workers thoroughly trained and experienced on the necessary crafts and completely familiar with the specified requirements and methods needed for the proper performance of the work of this Section.

1.6 DELIVERY, STORAGE AND HANDLING

A. Deliver Materials (except bulk materials) in Manufacturer's unopened containers fully identified with Manufacturer's name, trade name, type, class, grade, size and color.

B. Store Materials in unopened containers. Store off ground and under cover, protected from damage.

C. Deliver Materials to the District
   1. Provide “Letter of Acceptance” to be signed by District Project Manager, and Project Inspector.
   2. Materials to be delivered to District not less than 2-weeks prior to Contractor’s scheduled installation date.

1.7 PRE-INSTALLATION MEETING

Schedule a pre-installation meeting with Architect, District Project Manager, District ITS Representative, and Contractor in attendance.

1.8 WARRANTY

A. Manufacturer Warranty:
   1. MDF/BDF switch electronics: LAN electronics and associated software include a 1-year Manufacturer Warranty for non-core gear. Core gear shall include a 5-year Manufacturer Warranty.
   2. IDF switch locations: LAN electronics and associated software shall be warranted for 1-year with full service materials and labor.
   3. All other products shall include the Standard Manufacturer Warranties.

B. Contractor Warranty:
   1. Contractor shall provide installation warranty extending to the Data Communications Active Infrastructure protecting RSCCD against defects in workmanship for a minimum period of 2-years from the date of system acceptance. Such warranty shall provide all labor and materials necessary to correct a failed portion of the system and to demonstrate performance within original Specifications after the repairs are accomplished.
   2. Contractor shall be available 24-hour/7-day-per-week for on-site service to correct defects in installation, workmanship, product failure, or material without charge for labor, materials or parts. All major component failures must be replaced within a 4-hour period. A major component shall be considered any hub or switch component that affects fifty (50) or more user devices.
   3. Response time is defined as on-site presence of authorized Maintenance Personnel equipped with appropriate spare parts and diagnostic tools.
   4. Once work has begun on repair of a critical problem, a technician shall remain on-site until the problem has been repaired. Contractor shall be allowed to change Technicians at shift changes, however, the first Technician shall not leave the site until the second has arrived and has been briefed on the problem.
   5. Contractor shall provide the District with the Manufacturer toll-free hotline and support center to assist the District Personnel in the installation, tuning, maintenance and updating of the systems hardware and software.
   6. If parts are required to fix a critical problem that is not available locally, they shall be shipped by the fastest possible means at no cost to the District.
   7. During the warranty period, Contractor shall keep on-site detailed maintenance and repair records of all calls made to the facility.

PART 2 PRODUCTS

2.1 LAN ELECTRONICS

A. All Equipment is to be new and Certified by Brocade for network switches and Aruba for wireless access points.

B. Contractor will be responsible for all mounting kits and brackets for the LAN electronics and Wireless equipment.

C. No refurbished, used, after-market or gray-market components will be accepted.

D. Material must be rack mountable in the equipment racks as specified in Section 271000 Structured Cabling.

E. The System is required to operate 24 hours/day, 7 days/week. At a minimum, the system is required to have an uptime of 99% for any single switch component during the hours of 7:00 a.m. to 7:00 p.m. (and 98% uptime when calculated over a 24-hour day).

F. MDF/BDF Switches
   1. Redundant power supplies (2x500W) part number RPS9+E and redundant tray fans (1x ICX7750-FAN-E – kit of four) shall be provided for each switch.
   2. Switch shall be Brocade, Model ICX7750-48F or most current replacement part number. Confirm with District prior to purchasing.
      a. Premium licensing
      b. Associated 10 GE SFP's as required depending on application
      c. Interconnect / stacking cables as required depending on application. Part number 40G-QSFP-QSFP-C-0101
      d. When used as a core device, provide a minimum of two switches for stacking.
   3. Contractor shall verify the correct components and correct amount of components.

G. IDF Switches
   1. Stack switches. Provide additional SFP direct attached coper cables; 1M, 3M, or 5M length as required.
      a. Brocade Model ICX7150-48PF-2X10G or most current replacement part number. Confirm with District prior to purchasing.
      b. Exterior locations Layer II managed 48 port POE switch with SFP modules; manufactured for exterior locations.
      c. Contractor shall verify the correct components and correct amount of components for a complete and fully operable system.

H. Provide a Central UPS system at MDF/BDF to connect to the IDFs per the following:
   1. UPS and battery pack sized to provide minimum 1-hour uptime at full utilization including POE.
   2. Rack mount-kits for UPS and battery packs.
   3. Ethernet Network Interface Card with SNMP capabilities for remote monitoring.
   4. Contractor shall verify the correct components and correct amount of components for the MDF/ BDF, and each of the IDFs.
   5. Contractor shall verify the correct components and correct amount of components for a complete and fully operable system.

2.2 WIRELESS ACCESS POINTS AND ACCESSORIES

A. Manufacturer: Aruba Networks, District Standard – no or equals
   1. Indoor – Aruba 320 Series
      a. Part No. JW186A (AP-325 802.11n/ac 4x4:4 MU-MIMO Dual Radio Integrated Antenna AP)
   2. Outdoor – Aruba 270 Series
      a. Part No. JW178A (AP-275 802.11n/ac Dual 3x3:3 Radio Integrated Omni Antenna Outdoor AP).
      b. Part No. JW180A (AP-277 802.11n/ac Dual 3x3:3 Radio Integrated Directional Antenna Outdoor AP).

3. Mounting Kits
    a. Part No. JW054A (AP-270-MNT-H1 AP-270 Series Outdoor AP Hanging or Tilt Install Mounting Kit).
    b. Part No. JW055A (AP-270-MNT-H2 AP-270 Series Access Flush Wall or Ceiling Mount)
    c. Part No. JW052A (AP-270-MNT-V1 AP-270 Series Outdoor Pole/Wall Long Mount Kit)
    d. Part No. JW053A (AP-270-MNT-V2 AP-270 Series Outdoor Pole/Wall Short Mount Kit)
    e. Part No. JW047A (AP-220-MNT-W1W Flat Surface Wall/Ceiling White AP Basic Flat Surface Mount Kit).

PART 3 EXECUTION

3.1 EXAMINATION

A. Examine the areas and conditions under which the work of this Section will be performed. Correct conditions detrimental to timely and proper completion of the Work. Do not proceed until unsatisfactory conditions are corrected.

3.2 INSTALLATION

A. Contractor shall hold a pre-installation meeting with District Project Manager and RSCCD ITS Representative.

B. Property Damage caused by Contractor during the installation and testing process shall be replaced at no cost to the District.

C. Contractor will be responsible for all mounting kits and brackets for the LAN Electronics and Wireless equipment.

D. Contractor will be responsible for providing and patching ALL fiber and copper data cables into LAN Electronics, CCTV, and Wireless equipment in coordination with RSCCD ITS Department. No ports shall be patched without prior consultation with RSCCD ITS Department.

3.3 LOCATIONS

A. Coordinate with other trades to assure proper and adequate provision in the work of those trades for interface with the work of this Section.

B. Install the work of this Section in strict accordance with the original design, the approved Shop Drawings, pertinent requirements of Governmental Agencies Having Jurisdiction, and the Manufacturer's recommended installation procedures as approved by RSCCD Project Manager, anchoring all components firmly into position for long life under hard use.

3.4 GENERAL INSTALLATION REQUIREMENTS

A. Contractor shall provide a full suite of installation services and a turnkey solution. Specifically, this includes:
    1. Contractor shall submit a short written report on a weekly basis to the District Project Team. This report should contain the following information:
        a. Summary of work completed for the week concluded.
        b. Summary of work anticipated for the following week.
        c. Any action items requested of the District Personnel.
        d. Any deviations from the implementation schedule.
    2. Turnkey installation is defined as having all networking components including cabling, and LAN electronics, mounting hardware, firmware working as individual components as well as a homogenous system.
    3. Contractor will coordinate installation schedules with the District Project Manager so as to minimize the impact on day-to-day operation for the campus.

3.5 LAN ELECTRONICS INSTALLATION

A. The District shall configure each switch with the appropriate TCP/IP address and District configuration.

B. Contractor shall install switches per BDF/IDF as assigned by RSCCD ITS Department.

C. Contractor shall include topology of switches/stacks in each MDF/BDF/IDF.

D. BDF UPS Power Supply shall include an SNMP card, capable of notifying at minimum the following items:

1. When utility power is lost and unit is running on battery backup;
2. Over and under voltage;
3. Battery issues;
4. Battery age; and
5. Unit operating temperature.

E. Access Layer Fast Ethernet (100BaseTX/1000BaseTX) PoE Switches will be located in each closet supporting interfaces to switched 100BaseT Ethernet and switched 1000BasetT Fast Ethernet to station devices.

F. All Unshielded Category 6 Twisted Pair (UTP) wiring will connect access layer switches to the station devices (PC's, printers, etc.) All 100BaseTX/1000BaseTX interfaces will be 8-pin modular (RJ-45) type.

G. All Gigabit interfaces to the core switch will be fiber optic.

H. At full utilization, including POE, each UPS will include the appropriate extended run battery(s) capable of supplying 60 minutes of power.

3.6 WIRELESS INSTALLATION

A. Wireless Controllers are existing.

B. Install new WAPs and mounting hardware as indicated in the Drawings.

3.7 ACCEPTANCE TESTING

A. All LAN Electronics specified in this document must meet Manufacturer's standard tests. Testing must include identification of VLAN/IP address per port.

B. Device Configurations must be reviewed and approved by the District before deployment in production environment to allow for changes and acceptance.

C. Contractor shall perform a detailed site survey.

D. Contractor shall prepare detailed coverage heat maps, after the installation of the WAP's, using AirMagnet Wi-Fi Pro, AirMagnet Survey Pro or equal approved by the District Project Manager. Predictive site surveys are not acceptable such as utilizing Cisco LMS software. Provide current certifications for the site surveyor for AirMagnet or District approved equal. Provide a copy of the physical survey to District Project Manager prior to installation of Wireless Access Points ("WAP"). Heat maps shall identify:

1. Access point quantity
2. Access point locations (room and building)
3. Access point protocol 802.11 g/n/ac
4. Access point channel and signal strength
5. Common access point configuration
6. Seamless subnet roaming
7. Non 802.11 interference in 2.4GHz and 5GHz bands
8. Special antenna
9. Physical end environmental requirements for access point placement

10. Upgrades to existing access points (including hardware and/or software)

3.8 PROJECT RECORD DOCUMENTATION

A. Prepare and Submit copies of As-Builts and Logical Network Diagrams updated to reflect the new work completed for project (i.e. Site Plans, cable, pathways, MDF/BDF/IDF cabinet elevations, equipment spreadsheets, etc.).

B. These Documents must be delivered to the District Project Manager upon completion of work and before Final Inspection.

END OF SECTION 272000
081517/1010006

SECTION 272126
STRUCTURED TELECOMMUNICATIONS CABLING AND PATHWAY SYSTEM

Added, Addendum #2, 09/01/2017

PART 1 GENERAL

1.1 REFERENCES

A. The publications listed below form a part of this specification to the extent referenced. The publications are referred to within the text by the basic designation only.
   1. California Building Standards Commission
      a. California Electrical Code (CEC) Title 24, Part 3
   2. Electronic Industries Association (EIA)
      a. EIA/TIA TSB-75 Additional Horizontal Cabling Practices for Open Offices
      b. EIA/TIA-455-21 FOTP-21 Mating Durability of Fiber Optic Interconnecting Devices
      c. EIA/TIA-526-14 OFSTP-14 Optical Power Loss Measurements of Installed Multimode Fiber Cable Plant
      d. TIA/EIA-568-B.1, B.2 Commercial Building Telecommunications Wiring Standard
      e. TIA/EIA-568-B.2-1 Transmission Performance Specifications for 4-Pair 100 Ohm Category 6 Cabling
      f. TIA/EIA-568-B.2-2 Commercial Building Telecommunications Cabling Standard - Part 2: Balanced Twisted-Pair Cabling Components - Addendum 2 (ANSI/TIA/EIA-568-B.2-2)
      g. TIA/EIA-568-B.2-3 Commercial Building Telecommunications Cabling Standard - Part 2: Balanced Twisted-Pair Cabling - Addendum 3 - Additional Considerations for Insertion Loss and Return Loss Pass/Fail Determination (ANSI/TIA/EIA-568-B.2-3)
      h. TIA/EIA-568-B.2-5 Commercial Building Telecommunications Cabling Standard - Part 2: Balanced Twisted-Pair Cabling Components - Addendum 5 - Corrections to TIA/EIA-568-B.2-5
      i. TIA/EIA-568B.2-6 Commercial Building Telecommunications Cabling Standard - Part 2: Balanced Twisted-Pair Cabling Components - Addendum 6 – Category 6 Related Component Test Procedures
      j. TIA/EIA-568-B.3 Optical Fiber Cabling Components Standard (ANSI/TIA/EIA-568-B.3)
      k. TIA/EIA-568-B.3-1 Optical Fiber Cabling Components Standard Addendum 1 – Additional Transmission Performance Specifications for 50/125µm Optical Fibers (TIA/EIA-568-B.3)
      l. TIA/EIA-569-A Commercial Building Standard for Telecommunications Pathways and Spaces (ANSI/TIA/EIA-569-A-98)
      m. TIA/EIA-569-A-1 Commercial Building Standard for Telecommunications Pathways and Spaces, Addendum 1 (ANSI/TIA/EIA-569-A-1-2000). This addendum defines the surface raceways contained in the work area outlets.
      n. TIA/EIA-569-A-2 Commercial Building Standard for Telecommunications Pathways and Spaces, Addendum 2 (ANSI/TIA/EIA-569-A-2-2000). This addendum defines the furniture pathways and spaces contained in work areas.
      o. TIA/EIA-570-A Residential and Light Commercial Telecommunications Wiring Standard
      p. TIA/EIA-606-A Administration Standard for the Telecommunications Infrastructure of Commercial Buildings
      q. TIA/EIA-607-A Commercial Building Grounding (Earthing) and Bonding Requirements for Telecommunications
   3. Federal Communications Commission (FCC)
      a. FCC Part 68.5 Establishment of Telephone Premises Wiring Attestation List
   4. Insulated Cable Engineers Association (ICEA)
      a. ANSI/ICEA S-80-576 Communication Wire and Cable for Wiring of Premises
   5. National Electrical Manufacturers Association (NEMA)
      a. NEMA WC 63.1NEMA Performance Standard for Twisted Pair Premise Voice and Data Communications Cables
   6. National Fire Protection Association (NFPA)
      a. NFPA 70 National Electrical Code
   7. Rural Electrification Administration (REA)
      a. REA TECM 823 Electrical Protection by Use of Gas Tube Arrestors

8. Underwriters Laboratories Inc. (UL)
    a. UL 444 Communications Cables
    b. UL 467 Grounding and Bonding Equipment
    c. UL 497 Safety Protector for Paired Conductor Communication Circuit
    d. UL 514C Nonmetallic Outlet Boxes, Flush-Device Boxes, and Covers
    e. UL 910 Flame-Propagation and Smoke-Density Values for Electrical and Optical-Fiber Cables Used in Spaces Transporting Environmental Air
    f. UL 969 Marking and Labeling Systems
    g. UL 1286 Office Furnishings
    h. UL 1581 Electrical Wires, Cables, and Flexible Cords
    i. UL 1666 Flame Propagation Height of Electrical and Optical-Fiber Cables Installed in Vertical Shafts
    j. UL 1863 Communication Circuit Accessories
9. Public Works Standards, Inc.
10. GREEN BOOK; Green Book Standard Specifications for Public Works Construction 2006.

B. Federal, State, Local Codes, Rules, Regulations, Ordinances Governing the work, as well as RSCCD Structured Telecommunications Cable and Pathway Standards, guidelines and practices may apply and shall be incorporated as part of these Specifications.

C. In reviewing the various Contract Documents, the Structured Telecommunications Cable Contractor shall be responsible for noting conflicts between proposed design/concepts and the applicable Standards, Guidelines and Practices. A written Request for Information (RFI) shall be developed by the Structured Telecommunications Cable Contractor and submitted to RSCCD prior to commencing any work impacted by such conflicts. Such RFIs shall describe the conflict/violation and, if appropriate, recommend alternative solutions with associated costs. RSCCD warrants that they will diligently strive to address such RFIs in order to minimize negative impact on each SCCS installation completion schedule.

D. Where the requirements of the Contract Documents are more stringent than applicable Codes, Rules, Regulations, Ordinances, Standards, Guidelines and Practices, the Contract Documents shall apply. In all other instances, the most current Standards, Guidelines and Practices shall apply.

1.2 SYSTEM DESCRIPTION

A. The Structured Telecommunications Cable and pathway distribution and wiring system shall include permanently installed backbone and horizontal cabling, horizontal and backbone pathways, workstation pathways, telecommunications outlet assemblies, conduit, raceway, and hardware for terminating, and interconnecting.

B. The Horizontal System includes the cabling and pathway between the MDF/BDF and/or IDFs and the work area telecommunications outlet.

C. The Backbone Cabling and pathway system includes the interconnecting cabling, pathway, and terminal hardware to provide connectivity between the MDF's/BDF's, and IDF's.

D. The Backbone System shall be wired in a star topology with the MDF/BDF at the center or hub of the star.

E. Hardware and Terminating Equipment shall consist of UL approved; Category 6 (for new campuses and any modernization) patch panels, jacks, and fiber optic terminating equipment.

F. Backbone Cable shall consist of indoor/outdoor (plenum rated when necessary) 24 strand, Single Mode fiber optic cable. All indoor/outdoor rated fiber optic cable shall be UL listed.

G. Inter-Building Backbone Pathways shall consist of new 2-inches minimum inside diameter conduits, existing conduits or a combination of both, as per the Drawings and other Construction Documents.

H. Horizontal Pathways shall consist of new 2-inches minimum inside diameter conduit, existing conduit, and surface mounted Wiremold 5500 raceway; or combination of all three, as per Drawings and other Construction Documents.

I. Structured Telecommunications Cabling and Pathways Systems shall be installed in a “neat and workmanlike manner” as specified by ANSI/NECA/BICSI 568, 569-A and National Electrical Code, Sections 110-12 and 800-6.

1.3 SUBMITTALS

A. Manufacturer's Catalog Data
   1. Telecommunications cabling (backbone and horizontal)
   2. Fiber optic type LC Duplex connectors
   3. Telecommunications outlet/connector assemblies RJ-45 jack
   4. Equipment racks
   5. Equipment cabinets
   6. Patch Panels (Copper and Fiber optic)
   7. Power Strips
   8. Cable Hangers
   9. Floor outlet boxes or modules
   10. Firestop material
   11. Non-Metallic surface mounted raceway
   12. Cable tray
   13. Conduits
   14. Outlet boxes
   15. Pull boxes
   16. Underground pull boxes
   17. NEMA rated junction boxes
   18. Face Plates
   19. Patch Cords (fiber and copper)

B. Shop Drawings
   1. Telecommunications Drawings
   2. Distribution Frame Elevations

C. Telecommunications Shop Drawings and As-Built Drawings
   1. Provide BICSI Registered Communications Distribution Designer (RCDD) approved Drawings complete with wiring diagrams and details required to prove that the distribution system shall properly support connectivity from the MDF/BDF to the IDF to the telecommunications work area outlets.
   2. Show the layout of all cabling and pathway runs, MDF/BDF, IDF and ground system.
   3. Drawings shall depict all final telecommunications cabling configurations, including locations, gauge, pair assignments and patch panels after completed telecommunications cable installation.
   4. Electronic copies of Campus As-Built Drawings shall be provided to the Structured Telecommunications Cable Contractor, if they exist. If no Drawings exist, the Structured Telecommunications Cable Contractor shall create original AutoCAD or Revit Drawings for that campus.
   5. Work added to an existing campus shall be included on As-Built Drawings. Added work shall be clouded on the Drawing and appropriate notes shall be added to the legend and title block, indicating Scope of Work, Contractor name and date of completion.
   6. Provide one plastic laminated schematic of telecommunications cable system showing cabling, IDF's, MDF's/BDF’s, and equipment rooms keyed to Floor Plans by room number.
   7. Provide electronic copies of As-Builts to RSCCD.

D. Distribution Frames
   1. Provide Shop Drawing showing layout of applicable equipment including MDF/BDF and/or IDF racks, patch panels and LAN equipment.

2. Provide written documentation that details cabinet wall mounting and anchoring methods anticipated for each installation.

E. Statements
   1. Installer qualifications
   2. Test plan
   3. Professional References
   4. Factory Test Reports
   5. Field Test Reports
   6. Operations and Maintenance Manuals
   7. Schedules
   8. Labeling Scheme

F. Installer Qualifications
   1. Prior to installation, submit data of Installer's experience and qualifications, which shall include 3 years on projects of similar complexity. Include names and locations of two (2) projects successfully completed using fiber optic and copper communications cabling systems in similar environments.
   2. Installers shall be Manufacturer certified to provide minimum 20-year product performance warranty.
   3. Installer shall include BICSI Cabling Installer Certifications for all cabling being installed.
   4. Include specific experience in installing and testing structured telecommunications distribution systems using fiber optic and Category 6 or higher, cabling systems.
   5. Provide a list of at least five professional references for similar projects include Company names, contacts, phone numbers and a description of project, including scope and dollar amount.

G. Test Plan
   1. Provide a complete and detailed test plan for the telecommunications cabling system including a complete list of test equipment for the UTP and OFN components and accessories. Include procedures for certification, validation, and testing.
   2. Cabling shall be fully terminated from end to end (installed in faceplates and installed into patch panels, wall j-boxes and or raceway).
   3. Provide certification of staff to utilize listed testing equipment.
   4. Furnish factory test results for patch cords.

H. Factory Test Reports
   1. Factory reel tests
      a. Furnish factory reel tests for fiber optic cables.
      b. Furnish factory tests for fiber and copper patch cords.

I. Field Test Reports
   1. Telecommunications cabling testing

1.4 LABELING

A. Labeling Scheme must comply with TIA/EIA 606 Standards.

B. Contractor must coordinate with the District Representative and RSCCD ITS prior to installing any permanent labels.

C. Labeling of patch panels and classroom data outlets must show final occupied room and port numbers not architectural numbering.

1.5 SYSTEM CERTIFICATION AND/OR WARRANTY

A. The Installation must be certified to meet the latest Manufacturer system warranty program requirements for an extended warranty of 20-years minimum duration. At minimum such warranty shall, at no additional cost to RSCCD, provide a system warranty covering the installed Structured

Telecommunications Cable against defects in workmanship, components and performance. At minimum, the Contractor's Qualifications for Manufacturer's Certification shall include:

1. Contractor shall be certified by the Manufacturer for a minimum of 12-months prior to bid submittal date.
2. Contractor shall have valid Manufacturer Certification for the entire project duration of the installation agreement. In addition, Contractor shall have no known pending action or intent by Manufacturer and/or SCCS Contractor to terminate or limit the Contractor status as a Manufacturer Certified Installer.
3. Contractor shall attach to bid response a copy of their current Manufacturer Certification Certificate demonstrating valid certification in the Southern California region. The attached certificate is to specifically cite the name of proposing Contractor.

B. Contractor installation warranty extending to the Structured Telecommunications Cable protecting RSCCD against defects in workmanship for a minimum period of 2-years from the date of system acceptance. Such warranty shall provide all labor and materials necessary to correct a failed portion of the system and to demonstrate performance within original Specifications after the repairs are accomplished.

C. A system component and performance warranty extended by Manufacturer for a period of not less than 20-years from date of system acceptance. The performance warranty shall warrant the installed horizontal and backbone copper portion of the system and, as applicable, the installed horizontal and backbone fiber optic portions of the system. All such links and segments shall be warranted in accordance with the latest applicable requirements as defined by TIA/EIA.

D. As outlined herein, RSCCD intends that the resulting Structured Telecommunications Cable System be warranted under the extended warranty provisions extended by the Cabling Manufacturer. The warranty shall extend to the fiber optic, Category 6 UTP portions of the installation to the fullest extent allowed by the Manufacturers.

1.6 COORDINATION AND SUPPORT

A. Schedule a pre-installation meeting with Architect, District Project Manager, District ITS Representative, and Contractor in attendance.

B. Coordinate layout and installation of voice, data, and video communication cabling with other Contractors and Equipment Suppliers.

C. Meet jointly with other Contractors and Equipment Suppliers in order to exchange information and agree on details of equipment arrangements and installation interfaces.

D. Record Agreements reached in meetings and distribute to other participants in a timely manner.

E. Adjust arrangements and locations of distribution frames, cross-connect and patch panels in equipment rooms and/or telecommunications rooms to accommodate and/or optimize the arrangement and space requirements of voice and LAN equipment.

1.7 DELIVERY AND STORAGE

Provide protection from weather, moisture, dirt, dust and other contaminants for telecommunications cabling and pathway equipment placed in storage.

PART 2 PRODUCTS

2.1 COMPONENTS

UL or third party certified. Provide a complete system of telecommunications cabling and pathway components using star topology and support structures, pathways, and spaces complete with conduits, pull wires, raceways, pull boxes, outlets, cables, ground boxes, as per the Drawings. Fixed cables and pathway systems for telecommunications systems shall be UL listed or third party Independent Testing Laboratory certified, and shall comply with NFPA 70. Horizontal cable and

termination equipment shall be of a manufacture, installed and certified so as to provide a minimum 20-year warranty.

2.2 PATHWAYS (BACKBONE AND HORIZONTAL)

A. TIA/EIA-569-A. Pathway shall be conduit, and nonmetallic surface mounted raceway installations. Provide grounding and bonding as required by ANSI/J-STD-607-A.

B. Pathways shall be installed in accordance with NEC Article 314 and Article 800.51 (J), (K), or (L), as applicable, and installed in accordance with Articles 362.24 through 362.56, where the requirements applicable to electrical nonmetallic tubing apply.

2.3 TELECOMMUNICATIONS CABLING

Cabling shall be UL listed for the application and shall comply with TIA/EIA-568-B.1, B.2 and NFPA 70. Cabling shall consist of Category 6 UTP; and indoor/outdoor rated Single Mode 24 strand fiber optic cabling. Plenum rated cables where necessary shall comply with UL 910. Provide a labeling system for cabling as required by TIA/EIA-606-A and UL 969. Cabling manufactured more than 12 months prior to date of installation shall not be used.

2.4 FIBER OPTIC CABLING

A. Manufacturer: Corning or District approved equal.

B. Backbone Cabling (building to building) shall be 24-strand OS2 Single Mode.

C. Intra Building Cabling shall be 24 OM4 strand multimode.

2.5 HORIZONTAL CABLING

A. Shall consist of Category 6 UTP cabling
   1. Manufacturer: Belden, Avaya, or District approved equal.

B. Comply with NFPA 70, NEMA WC 63, ANSI/ICEA S-80-576 and performance characteristics in TIA/EIA-568-B.1 and B.2 UTP, four (4) pair 100 ohm.

C. Category 6 cable shall provide four (4) individually twisted pairs, 23 AWG or 22 AWG conductors.

D. Individual pairs shall be constructed to contain minimum two (2) twists per foot per each pair.

E. Ultimate breaking strength shall be minimum 90 pounds.

F. Four Pair Cable shall withstand a bend radius of 1-inch minimum at a temperature of minus 20 degrees C maximum without jacket or insulation cracking.

G. Conductors shall be color coded and polarized in accordance with TIA/EIA-568-B.1 and B.2.

H. Category 6 UTP and OSP rated cable for local area networks shall exceed TIA/EIA-568-B.1 and B.2 standards.

I. Conductor shall be 24, 23, or 22 AWG solid annealed copper.

J. Plenum Rated Cable shall comply with NFPA 70, UL 444, and UL 910.

K. Cable Jacket – verify color with District Project Manager.

2.6 CATEGORY 6 PATCH CABLES

A. UTP Patch Cables. Patch cables for unshielded twisted pair cable shall be Category 6 rated and shall be equipped with factory-attached connectors to interconnect equipment mounted on the racks of the distribution frame and to connect computer stations to outlet locations.

B. Contractor shall provide:
   1. MDF/BDF/IDF Patch Cords – 6-inches in length, Category 6 and colored according to the following:
      a. Green for instructional network;
      b. Blue for non-instructional network; and
      c. White for wireless and CCTV.
      d. Number of each color to be confirmed with RSCCD ITS and District Representative.
   2. Workstations – 10 feet in length, Category 6, black in color.
   3. Quantity required for 100% port population at both ends with 10% spare.

2.7 FIBER OPTIC PATCH CABLES.

A. Manufacturer: Corning or District approved equal.

B. Fiber Optic Patch Cables shall be Multimode or Single Mode patch cords pre-made to connect fiber optic equipment with fiber optic cross connects, interconnects and outlets.

C. The Patch Cords (jumpers) shall be impact-resistant, duplex fiber cables with LC connectors, of the same performance characteristics as the Single Mode fiber backbone being connected.

D. These Fiber Optic Patch Panel Connections shall provide 0.4 dB or less insertion loss and provide connection between the Active LAN devices and the Fiber Optic patch panel. Quantities for 100% fiber strand population at both ends plus 10% Spares.

E. Contractor shall provide:
   1. IDF Patch Cords – 1 Meter in length, LC connectorized, Single Mode, duplex, fiber optic patch cord.
   2. MDF/BDF Patch Cords – 3 Meter in length, LC connectorized, Single Mode duplex, fiber optic patch cord.

2.8 DISTRIBUTION FRAMES

A. MDF/BDF/IDF Equipment Cabinets/Free Standing
   1. The unit shall be designed to provide a secure, managed environment for computer and networking equipment.
   2. The unit shall conform to EIA-310 Standard for Cabinets, Racks, Panels and Associated Equipment and accommodate industry standard 19-inches rack mount equipment.
   3. MDF/BDF: Units shall be designed with four (4) vertical posts to allow rack mount equipment installation utilizing four (4) vertical mounting rails.
      a. Units shall provide 42U of equipment vertical mounting space (1U=1.75-inch or 44.45mm).
      b. Both front and rear doors shall be:
         1) Quick release hinges allowing for quick and easy detachment without the use of tools.
         2) Be lockable and shall open a minimum of 180 degrees to allow easy access to the interior.
         3) Reversible so that it opens from either side.
         4) Cabinet Frame with front and rear mesh doors.
   4. Units shall include removable side panels that are removed without tools using easy finger latches for fast access to cabling and equipment.
   5. Unit shall have base dimension of 84 inches in height by 31.50 inches in width by 41.86 inches in depth.
   6. IDF: Units shall be designed with two (2) vertical posts to allow rack mount equipment installation utilizing two (2) vertical mounting rails.
      a. Units shall provide 45U of equipment vertical mounting space (1U=1.75-inch or 44.45mm).
   7. The vertical mounting rails shall be adjustable to allow different mounting depths.
   8. Units shall include at least 60 sets of screwed in mounting screws, caged nuts, bolts and cup washers, and caged nut installation tool for the mounting of equipment inside the unit. Screw sets, caged nuts, bolts, and cup washers shall be installed (physically screwed) in the rack.
   9. All weight bearing components shall be constructed from steel no less than 0.9mm (20-gauge).
   10. All metal parts shall be painted using a powder coat paint process.

11. Plastic materials shall comply with Underwriters Laboratory Specification 94 with V-1 rating (UL94 V-1) or better.
12. Provisions shall be provided for all enclosure panels and rack-mounted equipment to be earthed or grounded directly to the frame.
13. Unit shall include a grounding kit containing terminated green/yellow jumper wires and associated hardware.
14. Units shall be equipped with vertical wire management.
15. Baying brackets shall be provided where mounting multiple cabinets are to be mounted together.
16. Units shall be black in color.
17. Cabinets shall be seismic/earthquake braced and anchored to floor.

2.9 MDF/BDF/IDF EQUIPMENT CABINET POWER DISTRIBUTION STRIP (PDU)

A. Each Equipment Cabinet shall come equipped with two (2) networkable, SNMP manageable and metered power distribution strips with minimum of ten 20 amp (NEMA 5-20R) receptacles.
   1. Provide vertical mountable PDUs for four post racks.
   2. Provide rack mountable PDUs for two post racks.

2.10 MDF/BDF CABLE RUNWAY

A. Cable Runway shall be installed in MDF/BDF Rooms. Size: 12-inch-wide, plus side channel, as needed.

B. Classified by Underwriters Laboratories (UL) as suitable for equipment grounding.

C. Cable Runway shall be used for voice and, or data and video communications cabling only. No electrical wiring shall be placed in cable runway with voice and data cabling.

D. Wall Angle Supports shall be steel angles. Ends to be smooth without hooks or projections. Brackets shall be able to support an end load of 600 lb. with a safety factor of 1.65.

E. Elbows, Tee's, 90-degree bends and crosses: All horizontal and vertical 90-degree elbows, tees, 90-degree bends and crosses shall be made with right angle couplings, which clamp to the runway without the need for drilling or cutting.

F. At all Horizontal 90-degree bends, tees, and crosses, provide adjustable junction splice kits for large radius cable bends.

G. Seismically supported by end wall supports, angular wall supports and communications equipment racks.

H. Black Baked Enamel Finish.

I. Manufacturer: Chatsworth Products (12-inch) or District approved equal.

2.11 COPPER PATCH PANELS

A. Manufacture: Belden, Avaya, or District approved equal.

B. UTP Patch Panels shall be rack mounted, rated to exceed EIA/TIA Category 6 modular patch panels each wired to terminate modular jacks per the EIA/TIA T568B Standard.

C. Quantities of Jacks are based on the number of UTP cables originating at wall outlets and terminating at the patch panel.

D. All Patch Panels shall be grounded.

2.12 CABLE MANAGEMENT

A. All Equipment Cabinets shall be equipped with horizontal cable management organizers for each fiber optic and UTP patch panel.

B. Horizontal Cables Managers shall be constructed of metal with black finish and be one (1) rack unit in height. Horizontal cable managers shall have evenly spaced “fingers” designed to maintain and allow the entry and exit of jumper, patch, or cross-connect cables and/or wires in place.

C. Horizontal Cable Managers shall be designed to extend past the frame to allow placement of equipment in any position within the rack. When mounted between equipment rack frame rails, they shall be securely mounted to equipment rack frame rails.

2.13 FIBER OPTIC PATCH PANELS

A. Manufacture: Corning or District approved equal.

B. Provide Panel for maintenance and cross connecting of fiber optic cables.

C. Panel shall be constructed of 0.125-inch minimum aluminum and shall have connectors which interface the inside plant fiber optic jumper cable with the outside plant fiber optic cable.

D. Panels shall be equipped with engraved laminated plastic nameplates above each connector.

E. Rack-mounted fiber patch panels shall be equipped to terminate or splice the incoming inter-building fiber and any required backbone or interconnect cables.

F. Each cable must be properly dressed.

G. These units will terminate the fiber optic cables, provide a place for jumper cables and will provide room to terminate additional optics.

H. Panel shall provide capacity for minimum of 24-fiber optic strands. Larger capacity patch panels shall be determined at site walk.

I. Panel shall be 100% populated with type LC couplers and adapter plates.

J. All connectors and couplers shall be type LC.

K. The fiber optic patch panel connections shall provide 0.4 dB or less insertion loss.

L. All patch panels shall be grounded.

2.14 TELECOMMUNICATIONS OUTLET/CONNECTOR ASSEMBLIES

A. Jacks and Faceplate Manufacturer: Belden, Avaya, or District approved equal.

B. Jacks shall comply with FCC Part 68.5, and TIA/EIA-568-B.1 and B.2.

C. Jacks shall accommodate UTP or OFNR and work in concert with Wiremold 5500 raceway.

D. UTP Jacks shall be RJ-45 designation T568B type, UL 1863 listed, eight-position, constructed of high impact rated thermoplastic housing rated for Category 6 service.

E. UTP Jacks for data shall be Category 6 hardware and shall comply with the attenuation requirements contained in TIA/EIA-568-B.1 and B.2.

F. Jacks color – verify with District Project Manager.

G. Telecommunications face plates shall comply with UL 514C, and TIA/EIA-568-B.1 and B.2; flush design constructed of high impact thermoplastic material.

H. Telecommunications faceplate colors shall be coordinated with District Project Manager or as noted on Drawings.

I. Telecommunications faceplates shall be available in 2-port, 4-port and 6-port single-gang configurations and as designated by RSCCD at site survey or as noted on Drawings.

J. All unused faceplate openings shall have blanks installed.

K. Stenciled lettering for voice and data circuits shall be provided using thermal ink transfer process.

L. Jacks shall be orientated on the patch panel staring at the top left and proceeding in a left to right top to bottom order.

2.15 NON-METALLIC SURFACE MOUNTED RACEWAY

A. Conceal cable pathways within walls whenever possible.

B. Unless otherwise indicated, raceway shall be three (3) channels, Wiremold 5500 with all necessary brackets, adapters, hardware and equipment to install certified Structured Telecommunications Cable and Pathway systems as described above.

C. Raceway shall be ivory in color or as noted on Drawings.

D. Notching or modifications of raceway shall not be permitted.

E. Proper screws and anchors shall be used to mount raceway.

F. Manufacturer: Wiremold or District approved equal.

2.16 NON-CONTINUOUS CABLE SUPPORT

A. Material
   1. Contractor shall provide and install all non-continuous cable supporting hardware.
   2. Non-continuous cable supporting hardware consists of J-hooks, multi-function clips, beam clamps, etc. Bridle rings or zip ties are not permitted.
   3. Non-continuous cable supports shall provide a load bearing surface of sufficient width to comply with required bend radii of high-performance cables; UL Listed. Bridle rings are not permitted.
   4. Non-continuous cable supports shall have flared edges to prevent damage while installing cables.
   5. Non-continuous cable supports sized 1-5/16-inch and larger shall have a cable retainer strap to provide containment of cables within the hanger. The cable retainer strap shall be removable and reusable and be suitable for use in air handling spaces.
   6. Non-continuous cable supports shall have an electro-galvanized or G60 finish and shall be rated for indoor use in non-corrosive environments.
   7. Multi-tiered non-continuous cable support assemblies shall be used where separate cabling compartments are required. Assemblies may be factory assembled or assembled from pre-packaged kits. Assemblies shall consist of a steel angled hanger bracket holding up to six non-continuous cable supports, rated for indoor use in non-corrosive environments; UL Listed.
   8. If required, the multi-tier support bracket may be assembled to Manufacturer recommended specialty fasteners including beam clamps, flange clips, C and Z purlin clips, etc.
   9. Tee-bar support bracket with one (1) non-continuous cable support, factory or jobsite assembled; rated for indoor use in non-corrosive environments; UL Listed.
   10. Fastener to wire/rod with one non-continuous cable support, factory or jobsite assembled; rated for indoor use in non-corrosive environments; UL Listed.
   11. Fastener to beam or flange with one non-continuous cable support, factory or jobsite assembled; rated for indoor use in non-corrosive environments; UL Listed.
   12. Fastener to C or Z purlin with one non-continuous cable support, factory or jobsite assembled; rated for indoor use in non-corrosive environments, UL Listed.

13. Fastener to wall, concrete, or joist with one non-continuous cable support, factory or jobsite assembled; rated for indoor use in non-corrosive environments, UL Listed.
14. Fastener to threaded rod with one (1) non-continuous cable support, factory or jobsite assembled, rated for indoor use in non-corrosive environments, UL Listed.
15. The multi-tiered support bracket shall have a static load limit of 300 lbs.
16. U-hooks and double J-hooks shall attach directly to threaded rod using standard nuts.

B. Manufacturer: Cooper B-Line, or District approved equal.

2.17 BACKBOARDS

A. Provide fire rated plywood ¾-inch-thick 36-inches high x 24-inches wide for mounting of equipment.

B. Fill and sand all voids in plywood to provide a smooth surface prior to painting.

C. Backboards shall be painted with a light color, nonconductive fire-resistant overcoat.

D. Contractor shall be responsible for determining correct backboard mounting and anchoring methods that will safely support the combined weight of the backboard, data network components that will occupy the backboard.

E. Backboard mounting and anchoring methods shall comply with RSCCD and State Building and Safety Codes.

F. Contractor shall be responsible for ensuring that mounting and anchoring methods comply with Part-3 Execution 3.1.3.

G. Drywall Screws shall not be used to mount plywood backboards.

2.18 GROUNDING AND BONDING PRODUCTS

A. Comply with UL 467, ANSI/J-STD--607-A-2002, and NFPA 70. Components shall be identified as required by TIA/EIA-606-A.

B. All Data Cabinets and components, cable runways, patch panels, and any parts installed in data cabinets shall be bonded together and bonded to the Telecommunications Grounding Busbar.

PART 3 EXECUTION

3.1 INSTALLATION

A. Telecommunications cabling and pathway systems, including the horizontal and backbone cable, pathway systems, telecommunications outlet/connector assemblies, and associated hardware shall be installed in accordance with TIA/EIA-568-B.1, B.2, B.3, TIA/EIA-569-A, NFPA 70, and UL Standards as applicable.

B. Cabling shall be connected in a star topology network.

C. Contractor shall provide all necessary tools and materials not specified, (tie wraps, “d” rings, screws, consumables, hardware, etc.) and equipment, (ladders, hydraulic lifts, storage containers, etc.) necessary to provide a complete and operating system.

D. Installation methodologies shall adhere to Manufacturer installation procedures so as to not violate certifications (i.e. UL).

E. All work shall be performed in a good workmanship-like manner leaving each location in the same or better condition as at the start of each project.

F. The Designated District Project Manager shall be provided progress reports.

G. Periodic on-site inspections will be completed during the course of installation.

H. The District reserves the right of “Local Jurisdiction” for final approval.

3.2 GENERAL CABLING

A. Install rated Category 6 and Indoor/Outdoor rated Category 6 UTP and Indoor/Outdoor Rated Single Mode, Multi-Mode fiber optic telecommunications cabling and pathway system in accordance with TIA/EIA-568-B.1, B.2, B.3 and the Drawings.

B. Screw Terminals shall not be used except where specifically indicated on Plans.

C. Do not untwist Category 6 UTP cables more than ¼-inch from the point of termination to maintain cable geometry.

D. Do not exceed Manufacturers' cable pull tensions for copper and fiber optic cables. Provide a device to monitor cable pull tensions. Do not exceed 25 pounds pull tension for four pair copper cables.

E. Do not chafe or damage outer jacket materials.

F. Use only lubricants approved by Cable Manufacturer.

G. Do not over cinch cables, or crush cables with staples.

H. For UTP cable, bend radii shall not be less than four times the cable diameter.

3.3 OPEN CABLE

A. Use only where specifically indicated on Plans or determined during site surveys.

B. When not run in surface mounted raceway or conduit, utilize non-continuous cable support above suspended ceilings and in all ceiling spaces.

C. Comply with TIA/EIA-568-B.1 and B.2.

D. Install cabling above suspended ceilings 6 to 12 inches above ceiling T-bar using non-continuous cable support spaced on 24 to 48 inch centers and securely attached to structural ceiling.

E. Do not exceed cable pull tensions recommended by the Manufacturer.
   1. Plenum cable shall be used in spaces where required by Code. Plenum cables shall comply with flammability plenum requirements of NFPA 70 and shall comply with UL 910.
   2. Avoid routing copper cable in areas where there may be high levels of Electromagnetic Interference (EMI). EMI is caused by AC power lines, broadcast signals, X-ray equipment, motors, generators, and fluorescent lights. UTP cables shall be routed at least 5 inches away from fluorescent lighting fixtures.
   3. Cables shall be placed in the non-continuous cable support located every 2 to 4 feet, as long as they are separately bundled and tie-wrapped using Velcro ties.
   4. Cabling shall be organized and identified so as to facilitate locating and handling individual sheaths for maintenance functions.
   5. Each bundle shall be neatly tied without over cinching or stressing cable.
   6. Bundles shall be clearly marked identifying the IDF and room to which routed, the station numbers served by the bundle, and any other information that may assist in administration.
   7. Great care shall be taken to protect all cabling from physical damage.
   8. A 10-foot service loop shall be installed above ceiling on each cable installation where possible.

3.4 BACKBONE CABLE

A. Fiber Optic Backbone Cable. Install Indoor/Outdoor rated fiber optic backbone in pathways.

B. Do not exceed Manufacturer's recommended bending radii and pull tension.

C. Prepare Cable for pulling by cutting outer jacket 10 inches leaving strength members exposed for approximately 10 inches. Twist strength members together and attach to pulling eye.

D. Terminate individual strands into fiber optic type LC connectors.

3.5 HORIZONTAL CABLING

Install horizontal cabling and pathway as shown on Drawings or as determined at site survey, between MDF/BDF, IDF and telecommunications outlet assemblies at workstations, in accordance with TIA/EIA-568-B.1, B.2 and 569-A.

3.6 WORK AREA OUTLETS

Terminate UTP cable in accordance with TIA/EIA-568-B.1, B.2 and wiring configuration T568B.

3.7 BACKBOARD AND EQUIPMENT SUPPORT

A. Contractor shall coordinate with RSCCD the MDF/BDF/IDF backboard and equipment support mounting locations and mounting methods.

B. Free standing MDF/BDF equipment cabinets shall be seismically anchored to the floor and to the overhead cable runway.

C. Contractor shall provide and install fasteners and anchors that are designed and rated for determined mounting surface and building construction type.

D. Contractor shall not use dry wall screws as fasteners for backboard and equipment.

E. Mounting and anchoring methods shall comply with RSCCD and State Building and Safety Codes.

F. Contractor shall be responsible for costs of all repairs if equipment installation methods are determined to be inadequate by RSCCD or if Contractor provided and installed fasteners and/or anchors fail, resulting with the equipment pulling away from wall or completely falling off of wall.

3.8 TESTING

A. Telecommunications Cable Testing:
   1. Perform telecommunications cabling inspection, verification, and performance tests in accordance with TIA/EIA-568-B.1 and B.2.
   2. All Testing Personnel shall be trained on testing equipment tools to assure that complete and accurate testing results are obtained / provided.

B. Inspection:
   1. Visually inspect cabling jacket materials for UL or third party certification markings.
   2. Visually inspect Category 6 UTP and Single Mode fiber optic cabling jacket materials for UL or third party certification markings.
   3. Inspect cabling terminations in telecommunications rooms and at workstations to confirm color code for tip and ring pin assignments, and inspect cabling connections to confirm compliance with TIA/EIA-568-B.1 and B.2.
   4. Visually confirm Category 6 marking of outlets, cover plates, jacks, and patch panels.

C. Verification Tests:
   1. Perform 250 MHz near end cross talk (NEXT) and attenuation tests for Category 6 systems installations.
   2. Perform fiber optic end-to-end attenuation tests using a power meter light source and Manufacturer's recommended test procedures. Perform tests in accordance with EIA/TIA-526-7, EIA/TIA 455-A-1991, EIA/TIA FOTP-171 Methods A3 or D3, or FOTP-34 Method B for horizontal, Single Mode fiber. Perform verification acceptance tests and factory reel tests.

D. Performance Tests:
   1. Category 6 Links. Perform UTP link tests in accordance with TIA/EIA-568 B.1, B.2 and Manufactures guidelines.
   2. Tests shall include wire map, length, attenuation, NEXT, PSNEXT, ELFEXT, PSELFEXT, RL and propagation delay.
   3. Fiber Optic Links. Perform OFN end-to-end attenuation tests and reel tests at job site.

E. Final Verification Tests
   1. Perform verification tests for UTP and OFN systems after the complete telecommunications cabling and workstation jacks are installed.
   2. Provide District Project Manager with written final tests verification within 1-week of completion of installation.
   3. Final test results shall include summary pages for each IDF/MDF/BDF as required.
   4. Test results shall be provided in both hard and electronic copy.

3.9 PATHWAY INSTALLATIONS

A. General Requirements:
   1. Comply with TIA/EIA-569-A, NEC and CEC.
   2. Shall be installed in accordance with NEC Article 314 and Article 800.51 (J), (K), or (L), as applicable, and installed in accordance with Articles 362.24 through 362.56, where the requirements applicable to electrical nonmetallic tubing apply.
   3. Conceal interior conduit under floor slabs and within finished walls, ceilings, and floors where possible.
   4. Keep conduit minimum 6 inches away from parallel runs of electrical power equipment, flues, steam, and hot water pipes.
   5. Install conduit parallel with or at right angles to ceilings, walls, and structural members where located above accessible ceilings and where conduit is visible after completion of project.
   6. Run conduits in crawl spaces and under floor slabs as if cable is exposed.
   7. Install no more than two 90-degree bends for a single horizontal cable run.
   8. Run conduits and surface mounted raceway as determined by site survey or as noted on Drawings.
   9. Provide Pullboxes with “Sealtight” flex conduit only where flexible connections are required. District Project Manager approval required prior to all “Sealtight” flex conduit installations.
   10. Provide all coring, patching and painting as needed for Intra-Building and Inter-Building pathways. Caulking is not an acceptable patching method for conduit penetrations into exterior walls. Coordinate with District Project Manager for acceptable patching methods.
   11. Innerduct, where specified, corrugated or splined (inside and outside) flexible orange innerduct, 1 inch in diameter, riser rated, shall be placed for fiber optic cable protection.
   12. Conduit shall have a factory formed bell on one end for interconnecting segments.
   13. Spacers: High impact spacers shall be used in all multi-duct systems, for solely owned or joint telecommunications/power construction. They shall conform to NEMA TC-2, TC-6, TC-8, and ASTM F 512 dimensions.
   14. All fittings shall be designed specifically for use with the type of conduit placed.
   15. All conduits shall be equipped with seal plugs in all ground boxes and expansion rubber seal plugs within all buildings.

B. Underground Conduits:
   1. A horizontal and vertical separation of 1 inch between the ducts shall be maintained by installing high impact spacers with horizontal and vertical locking intervals of ten feet.
   2. All communications conduits shall be placed in a uniform manner between ground boxes and pull boxes. Conduit in position #1 at one ground box or pull box shall maintain its position within the duct run and terminate in the #1 position at the next box. The position of all conduits between ground boxes and pull boxes shall be maintained.
   3. Long radius bends (over 30 feet) shall be used whenever possible to make changes in direction. If it is found to be necessary to place a 90-degree bend in the conduit run, a factory-made sweep of no less than 60-inch radius shall be used.
   4. No conduit run shall exceed a total of 180 degrees of bend between any two points (such as manholes or buildings) considering both vertical and horizontal sweeps.

5. Cold-formed trench bends shall have a radius of not less than 60 inches and shall pass mandrel integrity. Bend radius criterion is 2-inches or less 6 times the diameter of the conduit and any conduit larger than 2-inches is 10 times the diameter of the conduit.
6. The length and destination of all conduits shall be identified in each ground box, pull box and building. Embossed metal or heavy plastic tags strapped to each conduit shall be used.
7. After installation of communications conduits, the Contractor shall prove all conduits by pulling a mandrel with a diameter ¼ inch smaller than the conduit and 6 inches long through each conduit end-to-end. An inspector designated by the Contractor and RSCCD shall be notified 24 hours before this procedure. Each conduit shall be cleaned with a bristle brush to remove any debris.
8. Detectable utility marking tape shall be buried 12 inches below the surface directly above the conduit.
9. Where communications and power conduits occupy the same trench, all conduit structures shall be built with the telecommunications conduits placed above the power conduits and separated by a minimum of 12-inches of compact earth or 3-inches of concrete encasement, unless otherwise called out on the Construction Drawings and approved by RSCCD. If this type of construction is required, it shall receive the prior approval of the Contractor and RSCCD.
10. Contractor shall install new ¼-inch pull rope in all conduits placed.

C. Overhead Conduit:
1. Where overhead conduit is required between or within buildings, Contractor shall utilize EMT conduit with an inside diameter of 2-inches, unless otherwise specified.
2. All fittings shall be compression type connectors and couplers designed specifically for use with the type of conduit placed. Set screw connectors shall not be allowed.
3. All fittings shall be watertight. Fitting types shall be pre-approved by the designated District representative. Unless pre-approved by the designated District Project Manager, all conduits shall be installed by a qualified electrical Contractor who has at least 5-years' experience in similar installations within the Southern California area.
4. Contractor shall install conduit at roof locations utilizing the current District approved methodology and process. All conduit pathways and locations must be approved by RSCCD prior to installation.
5. All roof penetrations must be approved by RSCCD prior to installation.
6. Contractor shall install new ¼-inch pull rope in all conduits placed.

D. Communications Entrance Conduit
1. To prevent shear, all inter-building conduit (either underground or aerial) shall transition from PVC or metal to Sealtight flex conduit when attaching to a permanent structure. The Contractor and RSCCD shall determine the placement of all entrance conduit. All applicable standards shall be adhered to, i.e., RSCCD, NEC, BICSI or G.O. 128.
2. Sealtight flex conduit lengths shall not exceed 24-inches, unless approved by RSCCD.
3. Contractor shall install new ¼-inches pull rope in all conduits placed.

E. Vertical Conduit
1. Where vertical conduit is required between pull boxes or within buildings, Contractor shall utilize EMT conduit with an inside diameter of 2-inches, unless otherwise specified.
2. Where vertical conduit is exposed and subject to damage, Contractor shall utilize IMC or Rigid conduit.

F. Duct-Bank Locating Cable (Electronically Detectable Warning Tape)
1. Warning tape shall be a minimum of 3-inches wide, orange in color, and shall have a non-degradable imprint as follows:
   a. "Caution fiber optic cable buried below"
   b. The tape shall be electronically detectable.

G. Pull Rope
1. Pull rope shall be new ¼-inch polypropylene over polyester rope with a minimum 1700 lb. Tensile strength.
2. Pull rope shall be new material that is free of knots, kinks, and abrasions and shall be placed as a single continuous length in every new conduit.

3. Pull rope shall be secured at each end.

3.10 BONDING AND GROUNDING

A. MDF / BDF
   1. Install Telecommunications Grounding Busbar (TGB) in MDF/BDF. The TGB shall be installed in accordance with ANSI/J-STD-607-A-2002.
      a. Each MDF/BDF Rack shall be bonded to the TGB with a #6 AWG insulated copper conductor.
      b. All cable runway sections shall be bonded to each other using the listed bonding kit. Cable runway shall bond to the TMGB or TGB with a #6 GREEN insulated copper conductor.
      c. The TGB shall be grounded to the nearest access to the building ground with a #6 AWG insulated conductor.
      d. Building ground is identified as main building electrical ground, building structural steel, or ground rod. Water pipes, gas pipes and electrical conduits are not acceptable ground attachment points.
      e. Ground conductors are not to exceed 40-feet. If building ground connection is beyond 40-feet, Contractor is to install a new ground round at the nearest outside location. Ground rod location shall be approved by RSCCD prior to installation.
      f. Provide ohms testing for ground. Ground connections shall not exceed 5 ohms.
   2. Materials shall consist of:
      a. Telecommunications Grounding Busbar, 12-inches long X 4-inches high, ¼-inch thick copper bar with grounding assembly hardware kit; Cooper B-Line part number SBTMGB12K, or District approved equal.
      b. Bonding Conductor, #6 AWG copper wire insulated conductor with #6 compression ring terminals at both ends with ¼-inch diameter holes. Cooper B-Line part #SBUBC614K for 14-inches, #SBUBC618K for 18-inches, SBUBC632K for 32-inches, or District approved equal.
      c. Two-hole mechanical lug, copper alloy with silicon bronze hardware. Cooper B-Line part #SB47802, or District approved equal.

B. IDF
   1. Install Telecommunications Grounding Busbar (TGB) in each IDF. The TGB shall be installed in accordance with ANSI/J-STD-607-A-2002. The TGB shall be grounded to the nearest building ground with a #6 AWG insulated conductor.
   2. Each IDF Rack shall be bonded to the TGB with a #6 AWG insulated copper conductor. Each IDF shall have a Telecommunications grounding busbar (TGB).
      a. All cable runway sections shall be bonded to each other using the listed bonding kit. Cable runway shall bond to the TMGB or TGB with a #6 GREEN insulated copper conductor.
      b. The TGB shall be grounded to the nearest access to the building ground with a #6 AWG insulated conductor.
      c. Building ground is identified as main building electrical ground, building structural steel, or ground rod. Water pipes, gas pipes and electrical conduits are not acceptable ground attachment points.
      d. Ground conductors are not to exceed 40-feet. If building ground connection is beyond 40-feet, Contractor is to install a new ground round at the nearest outside location. Ground rod location shall be approved by RSCCD prior to installation.
      e. Provide ohms testing for ground. Ground connections shall not exceed 5 ohms.
   3. Materials shall consist of:
      a. Telecommunications Grounding Busbar, 12-inches long X 4-inches high, ¼-inch thick copper bar with grounding assembly hardware kit; Cooper B-Line part number SBTMGB12K, or District approved equal.
      b. Bonding Conductor, #6 AWG copper wire insulated conductor with #6 compression ring terminals at both ends with ¼-inch diameter holes. Cooper B-Line part #SBUBC614K for 14-inches, #SBUBC618K for 18-inches, SBUBC632K for 32-inches, or District approved equal.
      c. Two-hole mechanical lug, copper alloy with silicon bronze hardware. Cooper B-Line part #SB47802, or District approved equal.

3.11 FIRESTOPPING MATERIAL

Contractor shall provide all necessary fire stopping of openings through which cable is installed under this Specification, in accordance with NFPA 70 and all Local Codes. This includes installation in conduits, raceways, or bare penetrations. Provide and install UL 1479 approved (Fire Barrier Caulk) firestop material.

3.12 DATA SYSTEMS LABELING PROCEDURES

A. The Labeling shall be in accordance with the TIA/EIA-606-A Standards for data.

B. The Labeling shall be computer software generated and printed with readable fonts and black ink.

C. The Ink and Label shall be water and smear-proof for both indoor and outdoor use.

D. Samples of each type of media showing label type, labeling format, font size and ink shall be submitted for RSCCD approval.

3.13 DATA SYSTEMS LABELING

A. The Data Systems Labeling shall include all related equipment, cables, racks and RJ-45 outlets.

B. Label all cables at each end of the cable designating the rack and room number.

C. The Labeling shall be delineated on any riser diagrams, floor plans and test reports.

D. Patch Panels:

1. Patch Panels shall be provided with a factory lettering located above the ports with port number and factory installed field labels installed below the ports.
2. The field labels shall identify the room location.

E. Wall Jacks:

Wall jacks shall be provided with factory installed field labels identifying IDF and its room number and related patch panel port number.

END OF SECTION 272126

081517/1010006

SECTION 274116

INTEGRATED AUDIO-VIDEO SYSTEMS AND EQUIPMENT

REVISED, ADDENDUM #2, 09/01/2017

PART 1 GENERAL

1.1 SUMMARY

A. Provisions of Division 1 apply to this section.

B. Section Includes
   1. Provide all labor, materials, transportation and equipment to complete the furnishing, installation, assembly, set up, and testing of the Audio, Video and Control Systems work indicated on the drawings and specified herein. Notwithstanding any detailed information in this Section, provide complete, working systems. General design intent for this project is shown on the drawings and described in the specification.
   2. All equipment requiring coordination with other trades must be tested and verified for proper operation. Contractor is fully responsible for the coordination and must resolve all conflicts with AV equipment that connect or interact with other systems.
   3. Design, engineer and provide complete means of support, suspension, attachment, fastening, bracing, and seismic restraints (hereinafter "support") of the Work of this Section, including future installed equipment, in accordance with local building codes and regulations. Provide engineering of such support by parties licensed to perform work of this type in the Project jurisdiction. Contractor shall obtain the services of an engineer licensed to perform this work within the state or jurisdiction it is to be performed.
   4. The Contractor shall include all costs associated with structural engineering required by code for work in this section.
   5. Use skilled mechanics that are capable of returning surfaces to the appearance of new work when modifying millwork.
   6. Conduit and common back boxes including four square, pull boxes, junction boxes, etc. are supplied and installed by Division 26 Electrical Contractor. Connection panels that install in these boxes are supplied by AV Contractor.
   7. Provide Power Over Ethernet switches and injectors where required.
   8. Provide all cable and wire associated with this specification section and related documents.
   9. All systems shall be completely installed with all of the necessary interconnection, power supplies, patch cords, snakes, portable equipment cables and wiring to provide a fully functioning system.
   10. The governing overall requirement for this project is a complete and functional system.
   11. Include work not usually shown or specified, but necessary for proper installation and operation of the system or piece of equipment.

C. Products Supplied But Not Installed Under This Section
   1. Loose equipment or products supplied but not installed shall be turned-over to the Owner immediately upon delivery. Contractor is to supply a signed statement of transfer of this equipment to the consultant for record. Client must sign this statement acknowledging receipt of this equipment.
   2. Specialty floor boxes, back boxes including but not limited to Crestron, AMX, Extron, FSR, Steel City and speaker back boxes shall be provided to the General Contractor for installation.

~~D. Products Installed But Not Supplied Under This Section~~
   ~~1. Owner Furnished and existing equipment as shown on drawings.~~ **ADD 2**

~~E.~~D. Related Sections **ADD 2**

1. 019113 – General Commissioning Requirements
2. Division 9.
3. Division 10.
4. Division 11.
5. Division 26.

~~F.~~E. Measurement Procedures **ADD 2**

1. Product quantity is as required. If a quantity is given, the Contractor will provide at least the given amount. Some products listed under this section may not be required to fulfill the obligations of the work.

1.2 REFERENCES

A. Comply with all applicable governing codes.

B. Comply with the following applicable organizations and standards:
   1. AES Audio Engineering Society
   2. ANSI American National Standards Institute
   3. ASTM American Society for Testing and Materials
   4. BICSI Building Industry Consulting Service International, Inc.
   5. BTSC Broadcast Television Stereo Committee
   6. CEDIA Custom Electronic Design and Installation Association
   7. EIA Electronic Industries Alliance
      a. RS-310-C: (ANSI C83.9) Racks, Panels, and Associated Equipment
      b. RS-453: Dimensional, Mechanical, and Electrical Characteristics Defining Phone Plugs and Jacks
   8. ETL Electrical Testing Laboratories, Inc.
   9. FCC Federal Communications Commission
   10. ICIA International Communications Industries Association
   11. IEC International Electrotechnical Commission
   12. IEEE Institute of Electrical and Electronic Engineers
   13. INCITS InterNational Committee for Information Technology Standards
   14. ISO International Organization for Standardization
   15. ITU International Telecommunications Union
   16. NAB National Association of Broadcasters
   17. NCTA National Cable and Telecommunications Association
   18. NEC National Electrical Code
   19. NEMA National Electrical Manufacturers Association
   20. NFPA National Fire Protection Association
   21. NSCA National Systems Contractors Association
   22. OSHA Occupational Safety and Health Administration
   23. SMPTE Society of Motion Picture and Television Engineers
   24. TASO Television Allocation Study Organization
   25. TIA Telecommunications Industry Association
   26. UBC Uniform Building Code
   27. UL Underwriters Laboratories Inc.

1.3 DEFINITIONS

A. Definitions of Terms: The following definitions and conditions apply to each of the respective parameters and the measurements of those parameters, unless specifically stated otherwise:
   1. Frequency Response: The minimum acceptable frequency band over which the amplitude response is within 3 dB (or any specified range), or the specified limits of the response relative to the reference frequency (1 kHz for audio, 1.0 MHz for video) under design load conditions, at any operating level up to and including the specified maximum output while fully in compliance with all other performance specifications.

2. Maximum Output Level: The minimum acceptable maximum signal output level (voltage, current or power) attained under design load conditions attained while fully in compliance with all other performance specifications.
3. Harmonic Distortion: The maximum acceptable harmonic distortion measured at any operating level, up to and including the specified maximum output, with an applied sine wave signal of any frequency in the range of the specified frequency response.
4. Audio Intermodulation Distortion: The maximum acceptable intermodulation distortion resulting from the introduction of 60 Hz and 7 kHz signals in a ratio of 4:1 under design load conditions at any operating level up to and including the specified maximum output level.
5. Signal to Noise Ratio: The minimum acceptable ratio of signal to noise levels derived from broadband measurements under design load at maximum output over the entire range of the specified frequency response.
6. Clipping Level: The minimum acceptable maximum level of signal applied to the device under design load conditions while fully in compliance with all other performance specifications.
7. Sensitivity: The maximum acceptable level of input signal applied to the device that is necessary to provide the maximum output under design load conditions.
8. Design Load: The load (in ohms) specified by usage of the particular device input or output.

B. Signal Levels: The following voltage levels shall be considered the standard operating levels for the particular circuitry, unless specifically noted otherwise (0.775 Volt = O dBu = O dBm for a 600 ohms terminated circuit):
1. Microphone Circuits: -30 dBu or less.
2. Audio Line Level Circuits: -30 dBu to +24 dBu; equivalent to -30 dBm to +24 dBm for a 600 ohms terminated circuit.
3. Loudspeaker Level Circuits: More than +24 dBu.
4. Video Line Level Circuits: 1.0 Volt, peak to peak composite signal.

C. Characteristic Impedances: The following operating impedances shall be considered to be the standard operating impedances for the particular circuitry, unless specifically noted otherwise:
1. Microphone Circuits: 50-250 ohms source, 150-1500 ohms terminating, electrostatically and electromagnetically balanced to ground.
2. Audio Line Level Circuits: 600 ohms maximum source, 600 ohms minimum. terminating, line to line, electrostatically and electromagnetically balanced to ground.
3. Video Line Level Circuits: 75 ohms maximum source, 75 ohms minimum terminating to shield and signal ground, with Vertical Standing Wave Ratio (VSWR) not to exceed 1.2.

1.4 SYSTEM DESCRIPTION

A. Design Requirements
1. General
a. The Santa Ana Science Center audio-visual system includes Classrooms, Labs, a Conference Room, Science Learning Center, Digital Signage displays.
b. An Owner Furnished, Owner Installed (OFOI) integrated web enabled central control system will be used to control all aspects of the audio and video system's functions, signal routing, lighting, shades and audio levels. The control system shall be by Utelogy Corporation.

B. Classroom, Lecture, Computer Lab – 900 SF to 1200 SF; Single Projector
1. General
a. The room shall be provided with a presentation system adequate for the display of high resolution computer graphics and pre-recorded audio-video media.
b. The system shall provide speech reinforcement (including ADA compliant assistive listening devices) features.
c. The projection system shall allow for interactive collaboration. Features include the ability to annotate images, save and share it.
d. An Owner Furnished, Contractor Installed (OFCI) lectern shall be provided to house an equipment rack with source and switching equipment.

e. A digital video presentation system switcher shall be used for control and matrix switching of audio and video signals.

2. Sound Reinforcement System
   a. Ceiling speakers shall be provided for sound reinforcement of voice and program material.
   b. Connectivity for a portable wireless microphone system shall be provided at the lectern. The system shall consist of a RF receiver and lavalier microphone to allow for voice reinforcement.
3. Video
   a. A wall mounted ultra-short throw video projector shall be provided to project general video media and computer presentation material onto a whiteboard. The projector shall be capable of at least 400 lux per square meter measured at the screen. The projector shall have a 16:10 aspect ratio capable of WXGA resolution. All relevant aspects of the video projector's operation shall be controlled via the main control system.
   b. A digital video presentation system switcher shall be used to route any source signal to the projector.
   c. An input panel shall be provided in the lectern to allow connection of laptop computer and portable audio-video equipment to the system.
   d. Sources installed in the lectern shall include the following OFCI equipment: document camera, Blu-ray player, PC and monitor,
4. Remote Control Systems
   a. An integrated web enabled central control system will be used to control all aspects of the audio and video system's functions, signal routing, and audio levels.
   b. A web based User Interface shall be provided to control and monitor all aspects of the AV system. The interface will be programmed to recall system presets.
5. Assistive Listening
   a. Connectivity for a portable Assistive Listening System (ALS) shall be provided per ADA requirements. The system will consist of an RF transmitter and headsets to allow personal monitoring of the audio program.

C. Large Classroom – 1575 SF to 1740 SF; Dual Projectors
1. General
   a. The room shall be provided with a presentation system adequate for the display of high resolution computer graphics and pre-recorded audio-video media.
   b. The system shall provide speech reinforcement (including ADA compliant assistive listening devices) features.
   c. The projection system shall allow for interactive collaboration. Features include the ability to annotate images, save and share it.
   d. An OFCI lectern shall be provided to house an equipment rack with source and switching equipment.
   e. A digital video presentation system switcher shall be used for control and matrix switching of audio and video signals.
2. Sound Reinforcement System
   a. Ceiling speakers shall be provided for sound reinforcement of voice and program material.
   b. A lectern mounted gooseneck microphone shall be provided for voice reinforcement of the instructor.
3. Video
   a. Two wall mounted ultra-short throw video projector shall be provided to project general video media and computer presentation material onto a whiteboard. The projector shall be capable of at least 400 lux per square meter measured at the screen. The projector shall have a 16:10 aspect ratio capable of WXGA resolution. All relevant aspects of the video projector's operation shall be controlled via the main control system.
   b. A digital video presentation system switcher shall be used to route any source signal to the projectors.
   c. An input panel shall be provided in the lectern to allow connection of laptop computer and portable audio-video equipment to the system.

d. Sources installed in the lectern shall include the following OFCI equipment: document camera, Blu-ray player, PC and monitor,
e. In the Anatomy Lab (SC217), a ceiling recessed, PoE, PTZ camera shall be provided for directly above the demonstration table. The camera's signal shall be viewed via the Instructor's PC and routed to the projector as necessary. Camera control shall be per the web base interface as described below.

4. Remote Control Systems
   a. An integrated web enabled central control system will be used to control all aspects of the audio and video system's functions, signal routing, and audio levels.
   b. A web based User Interface shall be provided to control and monitor all aspects of the AV system. The interface will be programmed to recall system presets.
5. Assistive Listening
   a. Connectivity for a portable Assistive Listening System (ALS) shall be provided per ADA requirements. The system will consist of an RF transmitter and headsets to allow personal monitoring of the audio program.

D. Divisible Classroom – 1850 SF
1. General
   a. Each room shall be provided with a presentation system adequate for the display of high resolution computer graphics and pre-recorded audio-video media.
   b. The system shall provide speech reinforcement (including ADA compliant assistive listening devices) features.
   c. The projection system shall allow for interactive collaboration. Features include the ability to annotate images, save and share it.
   d. An OCFI~~Each~~ lectern shall be provided to house an equipment rack with source and switching equipment. **ADD 2**
   e. Digital video presentation system switchers shall be used for control and matrix switching of audio and video signals.
2. Sound Reinforcement System
   a. Ceiling speakers shall be provided for sound reinforcement of voice and program material.
   b. A lectern mounted gooseneck microphone shall be provided for voice reinforcement of the instructor.
3. Video
   a. A wall mounted ultra-short throw video projector shall be provided in each room to project general video media and computer presentation material onto a whiteboard. The projector shall be capable of at least 400 lux per square meter measured at the screen. The projector shall have a 16:10 aspect ratio capable of WXGA resolution. All relevant aspects of the video projector's operation shall be controlled via the main control system.
   b. A digital video presentation system switcher shall be used to route any source signal to the projectors.
   c. An input panel shall be provided in the lectern to allow connection of laptop computer and portable audio-video equipment to the system.
   d. Sources installed in the lectern shall include the following OFCI equipment: document camera, Blu-ray player, PC and monitor,
4. Remote Control Systems
   a. An integrated web enabled central control system will be used to control all aspects of the audio and video system's functions, signal routing, and audio levels.
   b. A web based User Interface shall be provided to control and monitor all aspects of the AV system. The interface will be programmed to recall system presets.
5. Assistive Listening
   a. Connectivity for a portable Assistive Listening System (ALS) shall be provided per ADA requirements. The system will consist of an RF transmitter and headsets to allow personal monitoring of the audio program.

E. Engineering Lab

1. General
    a. The room shall be provided with a presentation system adequate for the display of high resolution computer graphics and pre-recorded audio-video media.
    b. The system shall provide speech reinforcement (including ADA compliant assistive listening devices) features.
    c. An OFCI lectern shall be provided to house an equipment rack with source and switching equipment. **ADD 2**
    d. A digital video presentation system switcher shall be used for control and matrix switching of audio and video signals.
2. Sound Reinforcement System
    a. Ceiling pendant speakers shall be provided for sound reinforcement of voice and program material.
    b. A lectern mounted gooseneck microphone shall be provided for voice reinforcement of the instructor.
3. Video
    a. A ceiling mounted video projector shall be provided to project general video media and computer presentation material onto a motorized front projection screen. The projector shall be capable of at least 400 lux per square meter measured at the screen. The screen shall have a 16:10 aspect ratio capable of WUXGA resolution. All relevant aspects of the video projector's operation and the projection screen shall be controlled via the main control system.
    b. A digital video presentation system switcher shall be used to route any source signal to the projector.
    c. An input panel shall be provided in the lectern to allow connection of laptop computer and portable audio-video equipment to the system.
    d. Sources installed in the lectern shall include the following OFCI equipment: document camera, Blu-ray player, PC and monitor,
4. Remote Control Systems
    a. An integrated web enabled central control system will be used to control all aspects of the audio and video system's functions, signal routing, and audio levels.
    b. A web based User Interface shall be provided to control and monitor all aspects of the AV system. The interface will be programmed to recall system presets.
5. Assistive Listening
    a. Connectivity for a portable Assistive Listening System (ALS) shall be provided per ADA requirements. The system will consist of an RF transmitter and headsets to allow personal monitoring of the audio program.

F. Conference Room
1. General
    a. The system shall provide support for events such as meetings, teleconferencing and web conferencing.
    b. The system shall provide an ADA compliant assistive listening device features.
2. Video
    a. A wall mounted ultra-short throw video projector shall be provided in each room to project general video media and computer presentation material onto a whiteboard. The projector shall be capable of at least 400 lux per square meter measured at the screen. The projector shall have a 16:10 aspect ratio capable of WXGA resolution. All relevant aspects of the video projector's operation shall be controlled via the main control system.
    b. An input panel shall be provided in the conference table to allow connection of laptop computer and portable audio-video equipment.
    c. HDBaseT transmitters (with HDMI and VGA + audio connections) and receiver shall be provided to transport analog and digital signals from the conference table and credenza to the display.
3. Remote Control Systems

a. The video display shall be controlled with a wall mounted controller as shown on the plan. The controller shall be capable of turning the display on and off, adjusting the volume, and switching sources.
b. An integrated web enabled central control system will be used to control all aspects of the audio and video system's functions, signal routing, and audio levels.

4. Assistive Listening
   a. Connectivity for a portable Assistive Listening System (ALS) shall be provided per ADA requirements. The system will consist of an RF transmitter and headsets to allow personal monitoring of the audio program.

G. Science Learning Center
1. General
   a. The room shall be provided with a presentation system adequate for the display of high resolution computer graphics and pre-recorded audio-video media.
2. Sound Reinforcement System
   a. Ceiling speakers shall be provided for sound reinforcement of voice and program material.
   b. A lectern mounted gooseneck microphone shall be provided for voice reinforcement of the instructor
3. Video
   a. A ceiling mounted video projector shall be provided to project general video media and computer presentation material onto a motorized front projection screen. The projector shall be capable of at least 400 lux per square meter measured at the screen. The screen shall have a 16:10 aspect ratio capable of WUXGA resolution. All relevant aspects of the video projector's operation and the projection screen shall be controlled via the wall controller.
   b. An input panel shall be provided near the service desk to allow connection of laptop computer and portable audio-video equipment to the system.
4. Remote Control Systems
   a. An integrated web enabled central control system will be used to control all aspects of the audio and video system's functions, signal routing, and audio levels.
   b. A web based User Interface shall be provided to control and monitor all aspects of the AV system. The interface will be programmed to recall system presets.
5. Assistive Listening
   a. Connectivity for a portable Assistive Listening System (ALS) shall be provided per ADA requirements. The system will consist of an RF transmitter and headsets to allow personal monitoring of the audio program.

H. Public Area & Science Learning Center - Digital Signage Display
1. General
   a. These areas shall include a wall mounted 5048" or ~~6~~70" LED monitor used as digital signage displays. **ADD 2**
   b. The video monitors shall have the ability to display information, including class schedule, current events, way finding and RSS feeds from the existing campus wide digital signage system.
   c. The contractor shall supply and install an owner specified small form factor PC or signage server that is compatible with the existing digital signage system. The PC or server shall be connected to the College's LAN.
   d. The displays and PCs shall include all mounting hardware required for proper installation.

I. Software Programming
1. General
   a. Except when otherwise agreed in writing the client shall retain legal and beneficial ownership of all Intellectual Property, including source code, created by the Contractor, their employees and sub-contractors.

b. The Contractor must allow sufficient time for the programming of all software configurable audio, video and control systems. Contractors must evaluate the systems functional requirements and user interface and then allow time in their bid accordingly. The system description as well as the end user interview will provide the Contractor with the necessary information needed to proceed with the programming. Any questions as to the systems functional requirements must be sent in written RFI form to the Consultant. All programming schemes must be submitted to the Consultant for approval before programming starts. This includes the appearance of all user interfaces, touch panel layouts, preset and sub-preset information (acquired through client interviews), and speaker control schemes. The Contractor will also submit a narrative for the control system concept to the Consultant for approval. The Contractor is to interview the Owner and their representatives to acquire the necessary information needed to allow for the proper programming of this system. The Contractor, after interviewing the Owner, will then submit a written report stating his interpretation of the client's requirements for approval by Consultant. Only after the Client and Consultant have approved the programming report may the Contractor proceed with the programming of this system.
c. All equipment that is connected to the Client's local area network and is configurable via the local area network must have its equipment software installed onto dedicated computers provided by the Client. The Contractor is to allot time to install and test equipment software onto a minimum of two of the Client's computers which are to be identified by the Client and/or Consultant. The computers will be programmed to emulate user interfaces throughout the facility. The Contractor shall coordinate all software deployment over IP with the Client's Information technology department.

2. Control system minimum programming outlined below:
   a. The Contractor shall allot 4 hours for on-site control system programming with the Client's representative.
   b. The Control System in this project shall connect to the Client's Local Area Network (LAN). This connection will provide desktop computers control of the audio-visual system as well as make available remote troubleshooting via the internet. The Contractor shall provide time to install control system interface software on at least three desktop computers. Coordinate work with Client's Information Services personnel.
   c. Provide password protection to each control surface in this facility. Upon start up a password dialog box shall be presented to the user to enter his/her password. Only after entering a password will the user have access to the system. The system shall be programmed to shut down automatically after being idle for a time to be specified by the user.
   d. Unser Interface layout design will conform to the InfoComm International "Dashboard for Controls" guidelines. Touch panel designs are to be custom to this project. Re-purposed touch panel designs are not acceptable.
   e. Technical users shall have the ability to access individual speaker zone controls via the User Interface.
   f. The contractor shall provide a default audio level preset button, in the control system user interface, to allow a user or technician to recall all gain levels that were set when the system was commissioned.
   g. Control Help File: Each touch panel will include a help file that will explain each layer of the touch-panel control scheme.
   h. Control system shall utilize help desk software to provide:
      1) Real-time monitoring of:
         (a) Control system.
         (b) Device monitoring.
         (c) Projector lamp life.
         (d) System online status.
         (e) Room activity.
      2) Remote system diagnostics via Contractors help desk.
      3) Remote system control.
      4) Event scheduling.

5) Fault reporting via email alert.
6) Logging of help request.
7) User access control via password protection.
8) Event logging, report and chart generation.

i. The help desk software shall be placed on the desktop computers of each audio-visual maintenance person as well as key personnel of the Client. The Contractor shall train maintenance and operations persons to use this software feature.
j. Provide, install and test, room scheduling software programs to allow scheduling of each AV enabled room.
k. All serial controlled devices must have bi-directional communication with the control system. All control functions locally available on each device must be accessible via the remote control system. All locally gestured control functions must mirror on the control system user interface. In other words, if a volume control is adjusted on a DSP interface that adjustment must register on the control interface.
l. Control system shall be used to power up and down connected equipment at control system start up and shut down.
m. Control system shall control both lighting and motorized window shades in each room. Provide adequate presets to allow training and video conferences as explained in room descriptions above.
n. The control system shall monitor the connected power amplifiers and report overheating that may occur.
o. All projectors shall be monitored and report lamp hours remaining and lamp failure.

3. Complexity of Programming:
   a. It is required that the Contractor be experienced in programming systems of this complexity. Contractors shall allow enough time in their bid to permit extensive programming of all software configurable audio, video and control systems to the requirements of the client and consultant. Contractor shall break out cost associated with programming of these systems for review by the Consultant. By submitting this bid, the Contractor agrees that they understand systems of this type and that all programming services are included to the satisfaction of the Consultant. The Contractor further agrees that they will not make any claim for additional monies because of misinterpretation of programming requirements.

J. System Performance Standards and Requirements (meet or exceed)
   1. Audio Systems:
      a. Electrical Performance; Source Input to Power Amplifier Output:
         1) Frequency Response (Equalizer flat): +/- 0.2 dB 20 Hz to 20 kHz.
         2) Total Harmonic Distortion (THD): Less than 0.05%, 20 Hz to 20 kHz, 4 ohms.
         3) Noise: At least -105 dB, 20 Hz to 20 kHz, referenced to input of +4 dBm.
         4) Crosstalk: At least -60 dB, 20 Hz to 20 kHz.
         5) Damping Factor: Greater than 500 (below 1 kHz)
      b. Electro/Acoustic Performance; Distributed Systems: 103 dB Consistent with devices specified herein.
         1) Equipment: Specified individually.
         2) Audio signal paths: Shall not degrade performance of connected equipment.
      c. NEC - Article 640: Audio Signal Processing, Amplification and Reproduction Equipment.
   2. Video Systems:
      a. Video signal system: NTSC to EIA RS-170A, except as noted.
      b. Video signal paths: To EIA RS-250C short haul where equalized or fiber optic transmission, otherwise to the performance limit of the specified video cable.
      c. ANSI IT7.228 (ANSI Lumens): Measurement method for light output of fixed resolution video projection systems.
      d. ANSI IT7.228 (ANSI Contrast Ratio): Measurement method for the contrast ratio of fixed resolution video projection systems.
      e. SMPTE 170M: Color Specification for NTSC.

f. SMPTE 125M: Universal Sampling spec for SDTV and HDTV Broadcast Video.
g. SMPTE 253M: RGB Analog Video Interface spec for SDTV Studio applications.
h. SMPTE 274M: Component spec for 1920 x 1080 HDTV.
i. SMPTE 296M: Spec for 1280 x 720 RGB and YPbPr Baseband Video.
j.

3. Data and Communications Systems:
   a. TIA/EIA 568-C series: Commercial Building Telecommunications Cabling Standard.
   b. ANSI J-STD-607-A: Commercial Building Grounding (Earthing) and Bonding Requirements for Telecommunications.
   c. Comply with ITU-T (International Telecommunications Union – Telecom) for video conferencing systems.
4. Control Systems:
   a. RS485 (TIA-485): Electrical characteristics of generators and receivers for use in balanced digital multipoint systems.
   b. RS232 (TIA-232): Interface between data terminal equipment and data circuit-terminating equipment employing serial binary data interchange.
   c. RS 422 (TIA-422): Electrical characteristics of balanced voltage digital interface circuits.

1.5 SUBMITTALS

A. General
1. In addition to the requirements of Division 1, submit all materials for review arranged in the same order as the Specification, individually referenced to the Specification paragraph and Contract Drawing number. Submit 8 1/2" x 11" items bound in volumes and drawings in edge-bound sets. Submit all drawings on sheets of the same size.
2. The Contractor is to provide two copies of each hardcopy submittal and an electronic format copy (Shop drawings must be submitted as DWF. All other submittals will be provided as .PDF). All submittals must be original files or documents scanned copies will not be accepted.
3. Make each specified submittal as a coordinated package complete with all information specified herein. Incomplete or uncoordinated submittals will be returned with no review action.
4. Should the Contractor proceed with the Work of this Section in the absence of submittals for such work submitted and returned with action "No Exception Taken" or "Make Corrections As Noted", the Contractor proceeds at the Contractor's sole risk.
5. In the event that the Contractor deviates from the design shown on the audio-visual Contract Documents when preparing their shop drawings, the Contractor shall indicate with architectural style clouding, those deviations. The Contractor shall also submit with the Shop Drawings, a list of those deviations and substitutions, including the following:
   a. The deviation item number which shall also correspond to a number designation applied to each cloud on the shop drawings.
   b. Section of the specification that applies to these changes.
   c. The applicable shop drawing sheet number for each item.
   d. The corresponding audio-visual Contract Document sheet number for each item.
   e. A clear description of the deviation.
   f. The Contractor’s rational for the deviation (i.e. what benefit the deviation provides, why it is required, any cost impact, etc.).

B. Infrastructure
1. Provide drawings indicating boxes conforming and non-conforming to Consultant’s AV drawings.

C. Product Data
1. Manufacturer’s Product Data
   a. Contractor is to submit submittal in electronic format (i.e. PDF)
   b. List of materials (i.e. Table of Contents) categorized by room type: For each item specified in PART 2, include:
      1) Drawing device ID code.

2) Manufacturer.
3) Model number.
4) Listing: UL or other lab.
5) Quantity.

c. In sequence of List of Materials, provide a data sheet for each item, including all accessories marked for the proposed product.

D. Shop Drawings

1. Field (Installation) Drawings: Collate in sequence:
   a. Contractor is to submit shop drawings in .DWF format.
   b. Drawing index/symbol sheet.
   c. Floor plans. At scale of Contract Documents. Show:
      1) Device rough-in boxes with ID number.
      2) Mounting height.
      3) Conduit size.
      4) Wire type.
      5) Wire fill.
   d. Sections/Elevations. At scale of Contract Documents:
      1) Mounting location reference to nearest gridline.
         (a) Provide sections for each room containing AV equipment.
         (b) Provide elevations for each wall in rooms containing AV equipment.
         (c) Show all equipment, including speakers, monitors, projectors, podium, floor boxes, facility boxes, etc.
         (d) Provide vertical dimensions referenced above finished floor to each piece of equipment.
         (e) Provide horizontal dimensions reference to gridlines.
   e. Enlarged Plans. At scale of Contract Documents or larger as required for trade coordination. Show:
      1) Items indicated in "floor plans" above.
      2) Architectural features.
      3) Rack cabinets.
         (a) Ventilation details.
         (b) Power distribution detail.
      4) System furniture.
      5) Clearances required by applicable Code.
   f. System Conduit Riser Drawing, Show:
      1) Terminal cabinets.
      2) Coordination with floor plans.
      3) Wire runs not shown on floor plans.
      4) Wire type.
      5) Wire fill.
   g. Mounting details:
      1) Stamped and signed by an Engineer licensed in the Project jurisdiction for work of this type, where required by code.
      2) Show loads, type and strength of connections, sizes, dimensions, materials, etc.
      3) Show calculations on drawings or in bound volume for review by Authorities having jurisdiction.
      4) Provide details for:
         (a) Equipment rack anchorage.
         (b) TV Monitor mounts.
         (c) Loudspeaker mounts.
         (d) Video projector mounts.
         (e) Video displays.
         (f) Projection screens, both fixed and motorized.
         (g) Attachment to building structure.
   h. Installation details as required:

1) Terminal cabinets: Terminations.
2) Audio-Visual panel details.

i. Wire run sheets. Show:
1) Wire number.
2) Source.
3) Designation.
4) Signal type.
5) Wire type.
6) Operating level or voltage.
7) Timing reference, where applicable.
8) Physical length.

2. Shop (Fabrication) Drawings: Collate in sequence:
a. Contractor is to submit shop drawings in .DWF format.
b. Drawing index/symbol sheet (if separate set from Field Drawings).
c. System functional drawings. Submit separate drawings for each system/subsystem. Show at least:
1) Equipment:
(a) Function, make, model.
(b) Rack number, module frame and slot number.
2) Field device information
(a) Terminal cabinets.
(b) Pull boxes.
(c) Audio-visual panel connector designations.
3) Wiring
(a) Wire number.
(b) Wire type.
4) Shield condition at both ends (float, ground, location of ground).
5) Connector wiring details, each type.
6) Audio: Nominal operating level, Polarity. Note deliberate polarity inversions where required to maintain absolute polarity.
7) Video: Physical length. Electrical length in nanoseconds or degrees of sub-carrier, as applies. Equalization required.
8) Twisted pair, transmit and received devices: Transmission range at 60 Hz., cable length and signal quality.
d. Provide drawings for the following systems, if applicable:
1) Audio.
2) Video.
3) Control.
4) Data transmission.
5) Coordinated grounding scheme.
e. Equipment rack elevations: Show:
1) All racks scaled at 1 1/2" equals 1 foot, or larger.
2) Rack: Make, model.
3) Equipment: Function, make, model.
f. Rack wiring drawings: For each rack, show:
1) Power strip: Receptacles, circuiting.
2) Sequencing power and surge suppression systems.
3) Equipment.
4) Grounding.
5) Wiring, all systems.
6) Wiring harness scheme.
7) Ventilation detail.
g. Fabrication details: Submit for:
1) Receptacles.
2) Panels.
3) Special mounting provisions.

h. Legends/engraving details. Half or full size:
    1) Receptacles.
    2) Audio-visual panels.
    3) Equipment designations.
    4) .

E. Samples
1. Of all finishes/materials that will be visible to the public, including but not limited to:
    a. Receptacles and controls with associated trim plate.
    b. Each type of loudspeaker baffle and/or grille.
    c. All audio-visual panels.
    d. Audio-visual devices in public areas.

F. Programming
1. Control Programming Scheme Submittal
    a. Contractor is to submit submittal in electronic format (i.e. PDF)
    b. Provide a password-protected link to a folder on the Contractor's network to remotely access the touch panel from the Consultant's computer. Contractor is to have a dedicated control processor utilized on their network.
    c. Provide a graphic layout of each user control interface (touch panels, push buttons, etc.).
    d. Provide a list of devices that are controlled by each control user interface, including:
        1) Device.
        2) Brand.
        3) Model Number.
        4) Control Method.
    e. Provide a logic tree for each page for each control interface.
    f. Provide a system routing sheet for each control user interface, including:
        1) Source.
        2) Switcher / device input.
        3) Switcher / device output.
        4) Final destination.
    g. Provide help file content on each user interface.

G. Shop and Project Site Test Reports
1. Contractor is to submit submittal in electronic format (i.e. PDF)
2. Schedule: Submit test reports in a timely manner relative to the Project schedule such that the representative of the Owner may conduct Verification of Submitted Test Data without delay of progress.
    a. Shop test report: Submit prior to shipping completed equipment racks to Project Site.
    b. Project Site test report: Submit project site test report for this section after system completion and prior to Acceptance Review and Testing.
3. Content: Include at least:
    a. Time and date of start of burn-in.
    b. Time and date of test.
    c. Personnel conducting test.
    d. Test equipment, including serial and date of calibration.
    e. Procedures used.
    f. Results of test - numerical or graphical presentation.

H. Close Out Submittal
1. Contractor is to submit submittals in electronic format (i.e. PDF)
2. Operation and Maintenance Manuals
    a. Index.
    b. Systems operating instructions.
    c. Reduced set of system Record Drawings.
    d. Key schedule.

e. Maintenance and spare parts schedules.
f. Shop and Field Test Reports.
g. Equipment manuals. Collate alphabetically by manufacturer. Provide manufacturer's original operation, instruction and service manuals in color for each equipment item. Provide tabbed dividers between each product. Manuals provided by the Manufacturer in an individual binder may be submitted in that form.

3. Framed Operating and Maintenance Instructions: Provide adjacent to each ensemble of equipment racks. Provide sturdy frame with clear glass or non-scratching plastic cover. Provide permanent, non-fading media. Blueprints shall not be acceptable. Include:
   a. Sequence for system start-up and shutdown.
   b. System Functional Diagrams.
   c. Signal levels and impedance at accessible system signal and test ports, where applicable.
4. Record Drawings
   a. As work progresses, maintain records of "as installed" conditions. Update the set at least weekly. After successful completion of Project Site testing specified herein, and after completion of Punch List corrections, copy all records of "as installed" conditions on to final Record Document drawings, as specified in Division 1.
   b. Content: All drawings required under "Field and Shop Drawings". Show "as installed" condition. Where room designations according to Project permanent signage differ from construction designations in the Contract Documents, show both designations.
5. Provide four copies on CD-ROM containing the “as built” drawings, all manuals, training manual and programming code.
   a. Submit un-compiled programming code.
6. Training Submittal
   a. Provide all training materials for review prior to scheduling training sessions.
      1) Training manual.
      2) Agenda for the training session.
      3) The final punch list, indicating that all equipment is fully functional.
   b. See the section under Owner’s Instructions for training manual requirements.
   c. No training session will be scheduled until final punch list is completed and submitted.
7. Warranty Certificates
   a. Comply with Division 1.

1.6 QUALITY ASSURANCE

A. Qualifications
   1. The bidder shall, prior to the bid, in accordance with the Instruction to Bidders, submit at least the following information to verify that the bidder has the necessary experience and qualifications to perform the specified work:
      a. A detailed brochure describing the bidder’s capabilities in terms of facilities, personnel (include a personnel organization chart followed by resumes), experience, background, examples of similar installations (at least two projects within the past two years), distribution arrangements with manufacturers and financial capability, including certificates of insurance and satisfaction of the project bonding requirements.
      b. Contractor must, at the time of this bid submittal, have distribution or a dealership agreement with all manufactures whose products are specified in the bid documents. Contractor must also have completed manufactures training and certification before bids are submitted.
      c. Information identifying any and all local agents and/or subcontractors that will assist in the work and their role in the project.
      d. Identification of sources of labor for all fabrication and installation throughout the duration of the project.
      e. Evidence that he has acquired all necessary licenses, certificates and approvals to perform the specified work within the state or jurisdiction the work is to be performed.

2. Projects that include networked audio or video systems will require the Contractor to submit the name of the person, in their employment, qualified to perform this work. This person shall have certification in computer network technology and hold one of the following certifications:
    a. CNP – Certified Network Professional Program.
    b. Computing Technology Industry Association - Network+ certification.
    c. MCSE – Microsoft Certified Systems Engineer.
    d. CNE – Certified Systems Engineer.
    e. CCNA – Cisco Certified Network Associate.
3. Projects that include software configurable, integrated central control systems must include, as a sub-contractor, an authorized independent programmer who is fully engaged in the work of programming. The Contractor is to enter into an agreement utilizing the authorized independent programmer as a sub-contractor. Under this agreement, the Contractor will retain all of the responsibility for a complete and working system. The Contractor must include in their bid time to work out any programming glitches that may occur in the initial programming stage. These items include working through the initial and final programming stage with the authorized independent programmer to provide a functional system, testing the programmer's graphical user interface for intended functionality and provide onsite support for the programmer in the uploading and testing of programming revisions. The control systems programmer shall be present either by web meeting or in person at the end user interviews to acquire information first hand. The control systems programmer shall submit a report outlining the meeting results to Contractor for approval. Only when the Contractor approves this report shall it be submitted to the consultant for review. If the contractor does not employ a fulltime programmer, the following companies have been approved subject to above.
4. The Contractor will provide information on how and by whom the requirements of the warranty period will be fulfilled.
5. The submittal must justify, in the judgment of the Consultant, the Architect, and the Owner, that the Contractor has the capability to manage and install a project of this size and scope and that he is capable of the necessary business and technical arrangements for this installation and the pursuant warranty service. Contractor may be disqualified as a bidder if all of the submittal does not meet the approval of the Owner and his/her representative.
6. Company: Work of this Section shall be performed by a Sound or Audio-Visual Systems Contractor who has at least five years direct experience with the devices, equipment and systems of the type and scope specified herein, and who has a fully staffed and equipped maintenance and repair facility, and who is licensed to perform work of this type in the Project jurisdiction. The company must be NSCA R-ESI or CTS certified.
7. Personnel: Use adequate numbers of skilled workers who are thoroughly trained and experienced in the necessary crafts and who are completely familiar with the specified requirements and the methods needed for proper performance of the Work of this Section. Supervisors shall have at least five years direct experience in similar work. Installation and maintenance personnel shall have at least three years direct experience in similar work. Contractors shall have at least 60% of their installation staff CTS or C-EST certified.
8. Designated Supervisor: Provide a designated supervisor present and in responsible charge in the fabrication shop and on the Project Site during all phases of installation and testing of the Work of this Section. This supervisor shall be the same individual throughout the execution of the Work unless illness, loss of personnel, or other circumstances reasonably beyond the control of the Contractor intervene.

9. Staff Engineer: The Contractor shall have on his full-time payroll at least one staff engineer having five years minimum experience as an electronics engineer covering systems and projects comparable in substance and complexity to the project described herein. The staff engineer shall have NICET certification in Electrical/Electronics Engineering Technology and Audio Systems or equivalent. The signature of that engineer shall appear on all shop drawings and submittals.
10. Coordination: Coordinate the Work of this Section with the Work of all other Separate Contracts. Comply with Division 1.
11. Help Desk: The Contractor must employ a fully staffed help desk department that shall provide knowledgeable responses to inquiries regarding system operation. This department must also have the ability to provide remote diagnostics to identify equipment faults for troubleshooting.

B. Cutting and Patching
1. Cut, patch and extend existing work using skilled mechanics that are capable of matching existing quality of workmanship.
2. Assign work of moving, removal, cutting and patching, to trades qualified to perform the work in a manner to cause least damage to each type of work, and provide means of returning surfaces to appearance of new work.
3. Perform cutting and removal work to remove minimum necessary, and in a manner to avoid damage to adjacent work. Cut finish surfaces such as masonry, tile, plaster or metals, by methods to terminate surfaces in a straight line at a natural point of division.
4. When new work abuts or finishes flush with existing work, make a smooth and workmanlike transition. Patched work shall match existing adjacent work in texture and appearance so that the patch or transition is invisible.
5. Protect existing finishes, equipment, and adjacent work that are scheduled to remain, from damage.
6. Promptly repair damages caused to adjacent facilities by demolition operations, at no change in Contract Amount.

C. Painting
1. Use skilled mechanics that are capable of painting audio-visual equipment and hardware to match architectural surroundings, where applicable.

D. Regulatory Requirements
1. Regulations Applicable: including but not limited to those defined in Division 1.
2. Comply with all applicable federal, state, and local labor regulations, and applicable local union and trade regulations.
3. Installation practices shall be in accordance to industry-accepted standards (ANSI, Cal-OSHA, IEC, IEEE, FCC, NEC, NFPA, ICIA, NSCA, CEDIA, BICSI) or local acts, codes and standards enforced at the place of work, whichever is most stringent.
4. Procure and pay for all necessary permits, licenses, inspections, and observe any requirements stipulated therein.
5. Provide UL/ULC fire rated enclosures around all audio-visual floor and back boxes where required by code.

E. Programming
1. User Group Interview:
   a. Conduct interviews with the end-users to acquire programming requirements. Submit written results of the interview and the requirements set forth by the user group. Associate the user group requirements into the programming of each sub system. Submit to the Consultant a report that outlines the interviews conducted.

F. Pre-installation Meetings
1. Attend a pre-installation meeting at the project site with the Owner and his representatives in order to coordinate related work and scheduling issues.

G. Verification
   1. Verify dimensions and conditions at the Project Site. Submit any conflicts in timely manner for resolution.

H. Shop Fabrication and Testing
   1. Assemble and fully wire equipment racks at a fabrication shop off the Project Site. Burn-in for not less than 120 hours. Following burn-in, perform specified adjustment procedures. Provide test equipment and test according to procedures specified herein. Submit verification of shop test in timely manner. Following verification of shop test and when installation locations are ready as specified herein, deliver equipment racks and equipment to the Project Site and install.

I. Project Site Installation and Testing
   1. Install as specified herein.
      a. Perform specified adjustment procedures. Provide test equipment and test according to procedures specified herein. Request verification of Project Site test in timely manner.

J. Verification of Submitted Test Data
   1. Re-test in presence of designated representative(s) of the Owner at reasonable mutual convenience. Provide services of the designated supervisor and an additional technician familiar with work of this Section. Provide all test equipment. Provide complete set of latest stamped submittals of record for reference. Provide complete set of Shop and Project Site Test Reports, as applies. Provide a complete set of manufacturer's original operation, instruction and service manuals for each equipment item for reference.

K. Reference/Project Record Documents
   1. At all times when the work is in progress, maintain at the workplace, fabrication shop or Project Site as applies, a complete set of the latest stamped, action submittals of record for reference. Also maintain a separate, clean, undamaged set for preparation of Project Record Documents. Also maintain at the workplace a complete set of manufacturer's original operation, instruction and service manuals for each equipment item for reference.

1.7 DELIVERY, STORAGE AND HANDLING

A. Packing, Shipping, Handling and Unloading
   1. The Contractor will take receipt of all Owner Furnished Equipment at the project site or at a local warehouse.
   2. Deliver materials in manufacturer's original undamaged packages or in bulk packing which provides equivalent protection from rough handling, dust and dirt.
   3. Deliver all assembled equipment racks in custom manufactured wood crates to avoid damage during shipping. Contractor is to hire a crate manufacturer to build crates prior to delivering racks to the jobsite.
   4. All packing, shipping, insurance, handling and storage costs of equipment and materials shall be the responsibility of the Contractor.
   5. The Contractor shall be responsible for insuring all equipment and installation materials stored in their shop facilities until it is delivered to the Project Site and a delivery acknowledgement is received from the Owner or its authorized representative.
   6. Equipment unpacked for inspection but not ready for permanent installation must be returned into its protective packing.
   7. The Contractor shall be responsible for furnishing a temporary substitute for equipment that could not be delivered in time for system operation. All costs associated for renting, shipping and handling temporary substitute equipment shall be the responsibility of the Contractor.

8. In the event the equipment or installation material delivery is delayed, the Contractor must employ the fastest means of delivery service available to deliver the equipment on time. All costs for expediting the delivery of equipment shall be the responsibility of the Contractor.
9. Store packaged materials off of the ground or slab in a manner to protect them from elements, especially moisture damage.
10. Deliver completed, wired, tested equipment racks to associated equipment rooms at the Project Site when major work of all other separate contracts is complete, equipment room ventilation is operating with clean filters in place, the area is clean and free from airborne contaminates, and continuing work of other trades will not produce airborne contaminates or permit transport of such airborne contaminates to the equipment rooms.

B. Acceptance at Site
1. All equipment and installation material delivered to the Owner shall be properly documented in the form of delivery receipts.
2. Equipment delivered to the Project Site must have a delivery acknowledgement receipt signed by the Owner or its representative. Issue a signed copy of the delivery receipt to the Owner and file the signed copy for future reference.
3. The Contractor shall be responsible for the insurance coverage and security of equipment delivered to the Project Site until it receives an acknowledgement of delivery from the Owner or its authorized representative.

C. Storage and Protection
1. The Contractor shall provide a safe and secure storage location for all equipment and installation materials until they are delivered to the Project Site and it receives an acknowledgement of delivery from the Owner or its authorized representative.
2. For equipment assembled and tested at the Contractor's shop facility and delivered to the Project Site, ensure that the equipment is properly protected from improper handling, rain, water, humidity, moisture, heat, direct exposure to sunlight, dust and dirt during delivery and storage on or off the Project Site.
3. Do not remove protective packing from equipment until they are ready to be installed.
4. If, after equipment is installed, the Project Site cannot be cleaned or is still not clean because of on-going work by others, provide protective covering and protection to prevent airborne dust and dirt originating from damaging equipment.

1.8 PROJECT SITE CONDITIONS

A. Environment Requirements
1. The spaces where audio-visual system assemblies are installed shall meet the following requirements:
a. Free from dust generated from construction.
b. The room temperature shall be within the specified operating temperature recommended by the manufacturer.

1.9 SEQUENCING

A. Submit all testing documentation to the Owner's Representative for review prior to requesting the Fabrication Inspection and Substantial Completion inspections.

B. Allow adequate time for corrections to be made after inspections to maintain the Project Schedule.

1.10 SCHEDULING

A. Comply with the Project schedule.

B. Make all Submittals specified herein in a timely manner. Failure to make timely submittals complete as specified herein is considered to be lack of substantial progress of the Work of this Section. Contractor is to work around client schedule throughout the duration of the project.

C. Deliver all equipment, devices and materials required for the Work of this Section and install, test and ready all work for Acceptance Testing at least fourteen days prior to the completion date for the associated area of the Project, unless specifically instructed otherwise by the Owner.

D. Temporary Equipment: Provide and operate, without claim for additional cost or time, temporary equipment and/or systems to provide reasonably equivalent function, as determined by the Owner, in lieu of the Work of this Section which is incomplete or found not in conformance with the Contract Documents as of seven days prior to the completion date. Provide such temporary equipment until Acceptance of the Work of this Section. Thereafter, remove such temporary equipment.

E. It shall be a common understanding that there is a time constraint when executing this work. The Contractor shall use all means and resources to complete this project on or before the specified schedule at no additional cost to the Owner. This includes working beyond normal business hours and days, additional manpower, additional tools, etc.

1.11 WARRANTY SERVICE

A. Warrant all Work of this Section to be free from defects in materials and workmanship for a minimum of 2 years from the date of Owner acceptance of the Work of this Section.

B. All manufacturers' equipment warranties shall be activated in the Owner's name and shall commence on the date of system acceptance. In the case of Contractor modified equipment, the manufacturer's warranty may be voided. In such cases, provide a warranty equivalent to that of the original manufacturer.

C. All high-level software shall follow the warranty conditions specified by the manufacturer. Immediately update or upgrade the Owner's installed software as soon as new versions, updates or patches become available from the manufacturer at no additional cost to the Owner within this warranty period.

D. Response Time: Provide a qualified technician familiar with the work at the Project Site within 12 hours after receipt of a notice of malfunction. Provide the Owner with the telephone number attended 8 hours a day, 5 days a week, and an answering service or equivalent facility attended 24 hours a day, 7 days a week, to be called in the event of a malfunction. Provide repairs at no expense to the Owner and at the Owner's request, alternate facilities, services and systems for the duration of the repairs to any defective work of this Section. Provide a complete and operational System, within 48 hours after notification of a malfunction.

E. All work requested due to warranty issues shall be performed during regular working hours unless the Owner agrees to pay the difference in labor rates for overtime or night time work.

F. The Contractor shall use qualified service personnel to respond to all warranty issues or calls.

G. Off Site Service: Conduct all warranty repairs and services at the Project Site, unless in violation of manufacturer's standard product warranty. Provide substitute systems, equipment, and/or devices acceptable to the Owner for the duration of off-site repairs. Provide transportation for substitute and/or test systems, equipment, devices, materials, parts and personnel to and from the Project Site.

1.12 OWNER'S INSTRUCTIONS

A. General
   1. Conduct training on the completed system at a reasonable convenience of the Owner during normal Owner business hours. Contractor is to assess the complexity of the system and shall fully train the operation and maintenance staff named by the Owner.

2. Do not start training until all systems have been commissioned, training manuals are approved and an agenda along with schedule of each departmental training session has been submitted to the owner.
3. Training will be conducted in the actual room that is the topic of the training session.
4. The client asserts legal and beneficial ownership of all training materials which are specifically commissioned for this project.

B. Operator Training – Do not start training before system is in full operation and all components have been signed off by owner's representative. Use the items covered in the commissioning portion of this specification as a basis for the training curriculum.
   1. At least two 4-hour sessions of instruction will be given in order to familiarize the Owner with the operation of the system.

C. Maintenance Training
   1. At least ~~two~~ three 2~~3~~ - **ADD 2** hour sessions of instruction will be given in order to learn how to maintain and troubleshoot the system. A maintenance binder shall be provided by the Contractor with all manufacturer-specific operating and maintenance information for each piece of equipment used. On large jobs, the binders will be sub-divided into individual audio, video and control binders. Provide training on at least the following system features:
      a. Firmware upgrades
      b. Helpdesk features
      c. Complete use of system as outlined in the Commissioning section plus advanced troubleshooting.

D. Training Video
   1. A training video shall be produced and cover all aspects of the systems operation.
   2. Each page of all user interfaces shall be explained and recorded while gestures are made on the screen. Each button on the user interface shall be explained and demonstrated.
   3. All portable equipment that connects to the system shall be demonstrated both in their physical connection and routing method at the user interface.
   4. All patch bays shall be explained and demonstrated.
   5. All source equipment shall be explained in both physical loading of media and transport control as well as user interface control.
   6. Demonstrate on basic troubleshooting.
   7. Provide training on items as outlined in the Commissioning section of this document.
   8. Demonstrate system start up and shut down.
   9. Explain and demonstrate help files associated with touch panels.
   10. Audio and video files shall be combined and burned to DVD for distribution to each department.
   11. Provide professional DVD with searchable index of topics covered.
   12. Provide label with client's logo, room name/number, title, length and topics covered.

E. A training manual specific to this system will be written covering the basic and advanced functional techniques necessary to operate the system in a reliable and fully-functional condition. The Contractor shall submit hard color copies of the training manual as well as a soft copy in PDF or DOC format. Provide a hard copy of the training manual for each person to be trained. This manual will include:
   1. All contact information, including emergency and after hours phone and pager numbers, for requesting service assistance from the Contractor.
   2. A 11x17 set of as-built drawings of the completed project (a full-sized set will be issued to the client for their use, a half-size set will be attached to the inside back door of the main equipment rack).
   3. A table of contents at the beginning of the manual.
      a. The manual will begin by explaining basic information such as manual references, abbreviations, any assumptions made by the author, prerequisites required, numbering convection, etc.
      b. It will then proceed to the manual objectives.

c. Explain what the end user should understand after reading the manual.
d. It will cover the basics of the user interface including start up and shut down procedures, log on procedures, access privileges, operator password, levels of security, file structure, etc.
e. The manual will proceed to describe each user interface and its function. It will cover every layer of the interface and how to navigate through them.
f. Each of the system presets will be explained and the physical setup of the equipment and floor plan during presets will be illustrated. Source equipment such as CD players, Cassette, VCR, etc. shall have their routing scheme explained and illustrated. Portable equipment and its connection to the system shall be explained and illustrated.
g. The manual will end by explaining basic troubleshooting procedures and equipment care instruction.

4. The Contractor's maintenance instructions, which will include the manufacturer's maintenance instructions found on the factory manuals to keep the manufacturer's warranty in force.
5. A list of consumables (lamps, fuses, batteries, etc.) required to keep the system operating over time, along with sources of supply (if not readily available).
6. The Contractor will compile and submit all factory warranty registration forms or cards for each piece of equipment furnished for this project.
7. A form requesting feedback from the end user as to how the manual should be improved and a section to report errors discovered.
    a. The Contractor will make the corrections and improvement suggestions after receiving feedback from the users. This will be completed at no charge to the client. The manual will contain a date stamp and version number. Each feedback and error correction manual reissue will include a new version number.

F. Initial Use Support
    1. Provide standby trainer/system engineer during the first two public events.

1.13 MAINTENANCE

A. The Contractor shall, within the warranty period, schedule two visits to inspect and perform preventive maintenance on the system. The first visit shall be six months after the commencement of the warranty period. The last visit shall be just prior to the end of the warranty period.

B. Return 90 to 120 days after the system has been turned over to the Owner for additional programming, maintenance and system fine-tuning. Conduct interviews with the user group via telephone to acquire information needed to complete this task. Allow for one full day of programming in your initial bid to complete. Provide a per hour programming fee that will be charged if additional programming is needed.

C. Cache for event logging must be set to record unlimited events until the Contractor's first maintenance site visit. After the Contractor's first maintenance site visit, the cache can be limited to the Owner specified level.

D. The Contractor shall use qualified service personnel to conduct all maintenance work.

E. All maintenance work shall be performed during regular working hours unless the Owner agrees to pay the difference in labor rates for overtime or night time work.

PART 2 - PRODUCTS

2.1 GENERAL

A. Quality of Products
   1. Materials and equipment specified herein have been selected as the basis of acceptable quality and performance and have been coordinated to function as components of the specified systems.
   2. Where a particular material, device, piece of equipment or system is specified directly, the current manufacturer's specification for the same shall be considered to be a part of these specifications, as if completely contained herein in every detail.
   3. Each material, device or piece of equipment provided herein shall comply with all of the manufacturer's published specifications for that item.
   4. Equipment shall be from the manufacturers' current stock and shall not be stored longer than 1 year prior to installation, unless written approval to do otherwise is provided by the manufacturer and submitted for review by the Owner.
   5. All products will be a product of firms regularly engaged in the manufacturing of electrical, electronic or optical equipment. The equipment will be the latest model or type offered which meets the applicable specifications at the time of the submittal. Discontinued items replaced by newer models or versions are prohibited and should not be submitted for review.
   6. Quality of workmanship and fabrication of all equipment and components, which are custom fabricated, shall be comparable to professional equipment produced by specialized manufacturers of the trade involved and will be verified by inspection. Only firms having 5 years of experience in all aspects of the fabrication and installation of similar systems will be allowed to perform the work.
   7. All materials and products will be new and of professional quality. Unless specifically stated in the drawings or specifications, no existing or used materials will be installed.

B. Quantity
   1. Provide the quantity of products as shown on the Contract Drawings, or as otherwise indicated herein.
   2. The equipment listed in section 2.2 consists of all major equipment for the project. The Contractor will integrate into the system design and provide any additional components, wiring, programming, etc., to complete a functional system operating as described within the specifications and the category AV drawings.
   3. Components or equipment not specified or indicated on the drawings that are required to make a fully functional systems per the Owner's requirements and the design intent, shall be furnished and installed by the Contractor, and shall be submitted for Owner review.

C. Preference
   1. Where more than one manufacturer is listed herein as acceptable or equivalent, no preference is intended or implied by the order of listing.

D. In the event that a specified piece of equipment or product has been superceded, discontinued or is no longer available from the manufacturer, the Contractor shall submit a request for substitution of the originally specified product. The substitute product shall be the manufacturer's most current model of the specified product, or if the line has been discontinued, a product by the same manufacturer with specifications meeting or exceeding, and as close as possible to those of the originally specified product. Refer to Alternatives and Substitutes section for clarification.

E. Deferred purchase of equipment, including computers, touch panels, flat panel displays and video projectors with short market life expectancy
   1. Applies to the installation of equipment that is scheduled to take place more than 8 months after the bid has been awarded.
   2. Contractor shall, with his bid, breakout pricing for the above mentioned equipment and provide an allowance for these items.

3. Ninety Days prior to its purchase, the Contractor shall submit for the Consultant's approval, a list of the equipment that has replaced or superseded the specified equipment.
4. The submittal will include the manufacturer's specification sheets and other documentation to verify that the equipment meets the standards of the original specification.
5. In the event that the Contractor's allowance for the equipment to be installed exceeds the current pricing, the price differential shall be returned to the Owner as a credit. The credit shall include the current price differential plus markups for overhead and profit and shall be documented in writing.
6. In the event that the current pricing exceeds the allowance, the Contractor shall submit a detailed cost breakdown clearly indicating the current pricing differential and all markups requested.

F. Provide Complete
1. Provide all auxiliary and incidental materials and equipment necessary for the operation and protection of the Work of this Section as if specified in full herein.

G. Provide New
1. All materials provided under the Work of this Section shall be new, shall be the manufacturer's latest design/model, and shall be permanently labeled with the manufacturer's name, model number and serial number.
2. Products and materials shall be clean, free of defects, damage and corrosion.

H. Similar
1. Similar devices shall be of the same manufacturer, unless specifically noted otherwise in these specifications.

I. Safety Agency Listing
1. All devices provided under the Work of this Section that are connected to the Project electrical system shall be listed by Underwriters Laboratories (UL) or other Nationally Recognized Electrical Testing Laboratory acceptable to the Authorities having jurisdiction at the Project site, and shall be so labeled. Absent such listing, comply with Regulatory Requirements applicable to Unlisted Equipment.

J. Unlisted Equipment
1. Certain equipment specified herein may not bear listing by a Nationally Recognized Testing Laboratory. Such equipment is specified herein only where no equipment is known to exist bearing such listing which that perform the function required by the Owner. In such case, apply for field inspection of such equipment. The Contractor is responsible for the payment of such inspection costs.

K. Power Rating
1. All devices provided under the Work of this Section that are connected to the Project electrical system shall provide stable performance in full accordance with these specifications when operated on main service which complies with ANSI standard tolerances for voltage, frequency, transients and related parameters.

L. Circuit Protection
1. All active devices shall have integral fuse or circuit breaker protection.
2. All circuit breakers shall be fully magnetic.
3. Protection devices shall be located to facilitate examination, resetting and/or replacement without the need to disassemble or demount the associated device.
4. Contractor-fabricated items shall be provided with either indicating type circuit breakers or fuses of the clear glass cartridge type, mounted in fuse holders which will indicate a blown or defective fuse.

M. Continuous Use

1. All active circuitry shall be solid state and shall be rated for continuous use. All circuit components shall be operated in full compliance with the manufacturer's recommendations and shall contain sufficient permanent identification to facilitate replacement.

N. Construction
   1. All electronic equipment shall be of the "dead-front" type and shall be designed for standard 19" EIA rack mounting, unless otherwise indicated.
   2. Steel frames and enclosures shall be designed and wired to eliminate all induced currents within both the units and the systems.
   3. All bolted connections shall be made with self-locking devices.
   4. Coordinate all consoles and panels so that the general appearance is similar, or as directed by the Owner.
   5. All operating panels shall be at least 1/8" thick aluminum.
   6. Provide locking panel covers on all recessed, semi-recessed or surface mounted control panels not located in the equipment rooms, unless specifically noted otherwise. Panel locks shall be flush with no protrusions beyond the panel face when the door is closed. Recessed control panels shall be recessed within the back box to a depth sufficient to permit a locking hinged panel cover to completely close without affecting any device within the enclosed area.

O. Circuit Boards/Modules
   1. All printed circuit boards or modules shall be mechanically secured by bolt or friction-loading guide, in addition to any electrical connector attachment, and shall include an integral extraction grip.
   2. Printed circuit boards shall be connected to associated circuitry via soldered connections or precious metal positively keyed card edge connectors.
   3. All Contractor-fabricated printed circuit boards shall be at least 1/16" thick G-10 glass fabric epoxy base, copper plated to a minimum density of 2.0 oz./sq. ft. on one or both sides, and finished with 60/40 tin/lead solder either hot rolled or plated over the copper. All holes through the boards shall be plated through and solder filled. All boards shall be permanently identified with a designation that matches that of the mating connector or board position in the assembly.

P. Identification
   1. Provide permanent intelligible identification on, or adjacent to, all connectors, receptacles, controls, fuses, circuit breakers, patching jacks, and the like. This identification shall clearly and distinctly indicate the function of the item and shall be numbered or lettered to correspond with the function, circuit and location consistent with field and shop drawings. Refer to section 3.5 for clarification.

Q. Modular Products
   1. The drawings show conventionally packaged components to convey design intent.
   2. Card cages to have front and rear closure panels to provide a finished appearance.
   3. Except as noted below, modules of different functional types are permitted to share the same card cage/mounting frame and/or power supplies as applicable and if mechanically and electrically compatible.
   4. With amplifier input driven 10 dB beyond input level required to produce full rated output, amplifier shall withstand indefinitely any of the following load conditions without instability of operation of main over current protection (i.e. no blown fuses or circuit breakers).
      a. "Short" circuit of 0.1 ohm.
      b. Open circuit (no load).
      c. Rated load impedance.
   5. Maintain sense of signal polarity from input to output.

R. Keys
   1. Key all boxes, cabinets, enclosures, panels, controls, doors and related provided for similar usage within a system identically. For each unique key type, provide a quantity of ten. Stamp each key with a reference designation. Provide a master keying system.

2. Submit a schedule of keying to the Owner. Where so noted, provide Project Standard lock cylinders and keys; coordinate with the work of other Sections.

S. Lectern Power Cord
   1. The power outlet connecting the lectern to the floor box must be twist-lock type. The power cord connecting the podium to the floor box must be 12 inches shorter that the low voltage cable connecting it. This will protect the low voltage cable from damage if the podium was to be moved inadvertently without disconnecting the cables. The power cable shall include a wire-rope strain relief to keep the power cord from damage. See cable detail on plan-set for more information.

T. Assistive Listening System (RF)
   1. An assistive listening system using wireless radio frequency (RF) transmitter and headsets will allow personal monitoring of the audio program for the hearing impaired. The transmitter will be a frequency agile unit with no less than 30-channel capability and will broadcast the main audio program to personal headsets used by hearing impaired audience members. The system and quantity of headsets supplied shall conform to the ADA requirements (section 219 and 706) for the space. Stereo headset type and hearing aid compatible (T-Coil) listening devices are required; ear-bud type devices are not acceptable. Supply a drop-in type battery charging system capable of servicing multiple receivers, with sufficient charging capacity to charge each receiver simultaneously. Follow the table below for quantity requirements.

Capacity of Seating in Assembly Area	Minimum Number of Required Receivers	Minimum Number of Required Hearing Aid Compatible Receivers
50 or Less	2	2
51 to 200	2, plus 1 per 25 seats over 50 Seats *1	2
201 to 500	2, plus 1 per 25 seats over 50 Seats *1	1 per 4 Receivers *1
501 to 1000	20, plus 1 per 33 seats over 500 *1	1 per 4 Receivers *1
1001 to 2000	35, plus 1 per 50 seats over 1000 seats *1	1 per 4 Receivers *1
2001 and over	55, plus 1 per 100 seats over 2000 seats *1	1 per 4 Receivers *1

*1 Or fraction thereof

U. Projection Screens
   1. Provide extra screen material drop to locate the projection screen at the optimum viewing angle where required. Verify screen drop requirements with architectural sections and elevations.

V. Provide enclosure systems including, but not limited to racks, cabinets, cases and related panels and accessories as specified herein, or approved equivalent. Provide size and quantity as shown on drawings. Provide color as specified by Architect. If no color is shown on drawings, submit manufacturer's standard color chips for selection.

~~W. Cable Tray: Provide aluminum ladder style cable tray with flange in side rails where called out in drawings. Size the cable tray to accommodate all wire that must pass through it. Provide all supporting hardware and accessories.~~
   ~~1. Ladder Style Cable Tray~~
      ~~a. P-W Industries.~~
      ~~b. Equal by Hubbell.~~
      ~~c. Approved equal.~~ **ADD 2**

~~X. Floor Mounted Equipment Racks: Provide each bay with basic frame, vented locking rear door, top panel with single 10" fan, certified seismic floor anchor kit, ganging hardware, except where otherwise indicated, at each ensemble of bays, provide end (side) panels to provide complete enclosure.~~ **ADD 2**

1. ~~Rack cabinet, heavy duty welded 14ga. CRS, single bay of maximum dimensions 83-1/8"(H) x 24"(W) x 32.5"(D); floor supported with accessory louvered side rack side panel.~~
   a. ~~Mid Atlantic WRK Series.~~
   b. ~~Equal by Atlas/Soundolier.~~
   c. ~~Approved equal.~~
2. ~~Wall cabinet, tilt out:~~
   a. ~~Atlas/Soundolier AWR Series.~~
   b. ~~Mid Atlantic WRS Series.~~
   c. ~~Equal by House of Metal Enclosures (HOME).~~
   d. ~~Equal by Hammond Manufacturing.~~
3. ~~Wall Mounted cabinet:~~
   a. ~~Atlas/Soundolier 300 Series.~~
   b. ~~Mid Atlantic DWR Series.~~
   ~~c.~~a. ~~Equal by Hammond Manufacturing~~.

~~Y.~~W. Rack Panels and Accessories: Rack Mounting Screws: Screws 10-32; length as required for at least 1/4" excess when fully seated; oval head with black plastic non marring cup washer or equivalent ornamental head; nickel, cadmium or black plated; Phillips, Allen Hex, Square-Tip or Torx drive. Slotted screws are not acceptable. **ADD 2**

1. Blank Panels:
   a. Atlas/Soundolier S19 Series.
   b. Zero ZP112000 Series.
   c. House of Metal Enclosures (HOME) Series PM.
   d. Middle Atlantic Products BL, SB or HBL Series.
2. Vent Panels:
   a. Middle Atlantic ETF Series.
   b. Equal by Atlas/Soundolier.
   c. Equal by Zero.
   d. Equal by House of Metal Enclosures (HOME).
3. Shelf:
   a. Middle Atlantic Products U Series.
   b. Atlas/Soundolier SH19 Series.
   c. Zero A52 Series.
4. Drawer:
   a. Atlas/Soundolier SD Series.
   b. Middle Atlantic Products UD Series.
   c. House of Metal Enclosures (HOME) SD Series.
   d. Zero A43/A36 Series.
5. ~~Compact Disc Holder: Middle Atlantic Products Model RSH-4A.~~ **ADD 2**
6. Rackmount Computer Keyboard: Middle Atlantic RM-KB.
7. Equipment Custom Rackmount Shelf: Middle Atlantic Products Model RSH-4A Series.
8. ~~Rackmount Computer Keyboard.~~ **ADD 2**
   a. ~~Mid Atlantic RM-KB series.~~
   b. ~~Approved equal.~~
9. ~~Computer Monitor Rackmount.~~ **ADD 2**
   a. ~~Mid Atlantic RM-MM series.~~
   b. ~~Approved equal.~~

~~10.~~8. Horizontal Lacer Bars **ADD 2**

   a. Mid Atlantic LBP-IR4, LBP-1S, LBP-1P.
   b. Equal by Atlas/Soundolier.

~~Z. Equipment Enclosure Ventilation: Provide UL Recognized devices. Connect to enclosure power, comply with applicable Codes.~~ **ADD 2**

1. ~~Fan panel, 5-1/4" high painted steel rack panel with 4" diameter fans, each fan with chrome plated finger guard, low speed air flow, two fans per panel, total 120 CFM:~~
   a. ~~Mid Atlantic QFP-2 Series.~~

~~b. Atlas/Soundolier ES/IS Series.~~
~~c. BGW Systems.~~

~~2. Thermostatic Fan control module, user definable temperature range with status LED's, temperature sensing probe.~~
~~a. Middle Atlantic FC Series.~~
~~b.~~c. ~~Atlas/Soundolier CFT Series~~.

~~AA.~~X. Equipment Enclosure Power and Signal Grounding: Comply with applicable Codes and applicable portions of Division 26. Provide UL Listed devices, Specification or Hospital Grade. Provide all junction boxes, raceway, fittings, wire, supports and fastenings as required for complete installation. Unless otherwise noted, provide receptacles of NEMA 5-15R configuration.

1. Full height receptacle strip, Isolated Ground: **ADD 2**
   a. Wiremold 3000 Plugmold IG Series.
   b. Middle Atlantic PD series vertical power strips.
2. Full height receptacle strip, three or more circuits, Isolated Ground:
   a. Wiremold 3000 Series with Specification Grade IG 5262 Series receptacles.
   b. Middle Atlantic PD series vertical power strip.
3. Wireway, lay in, NEMA 1: Any meeting NEMA 1 and UL870. Size as required.
4. Flexible metal conduit: Comply with Division 26.
5. Sequencing Power System:
   a. The Contractor is to design and build power sequencing and surge suppression systems that will control and distribute power in the equipment racks. The system will be designed to sequentially connect power to all of the audio-visual equipment in the equipment racks. Outlets are mounted to the unit's back plate or on a remote strip. If the project utilizes a control system, the sequencing power system will be controlled by the software configurable control system. The touch panel's shut down button will prompt a second time asking "Are you sure you want to shut the system down?" A positive response will activate system shut down. A push button control station's shut down button will be pressed twice to shut down the system. If the project does not include a control system, the Contractor is to provide a dedicated sequential controller in the equipment racks.
      1) 15 amp or greater power capacity.
      2) 3-prong 15 amp 120VAC isolated ground outlets (provide required amount).
      3) Individual sequencing steps for each outlet.
      4) Adjustable power-up time delay and outlet sequencing intervals.
      5) Modular power raceway systems shall be constructed of 18-gauge min-spangle galvanized steel.
      6) Remote controllable via contact closures (if applicable).
      7) Status indicator on touch panel (if applicable).
   b. Approved subject to above:
      1) Middle Atlantic RLM-XX, RM-XX, R-XX or M-XX Modular Power Raceway Series.
      2) Middle Atlantic USC-6R Universal Sequencing Controller.
      3) Equal by Atlas Soundolier.
6. Signal Grounding bus bar, insulated from enclosure frame:
   a. Atlas/Soundolier BBG Series mounted on standoff insulators.
   b. Zero A32 Series.
   c. Middle Atlantic.
   d. Panelboard Isolated Ground bus kit by manufacturer of Project Panelboards specified in Division 26.
7. Multi-Outlet Assembly, Surge Suppressing, UL Listed. Comply with ANSI/IEEE C62.41-1980. Provide at least six receptacles. Provide equivalent to:
   a. Surgex SX RT series.
   b. EFI Electronics Corporation Model 153.
   c. MCG Electronics, Inc. Model 296 (subject to UL Listing).

8. Computer Grade Uninterruptible Power System, UL Listed. Provide continuous, no-break power with sine wave output. Provide Transient Over-Voltage (TOV) Surge Suppression; comply with ANSI/IEEE C62.41-1980, Category A and Category B. Provide complete isolation from Line. Provide output voltage regulation to ANSI C84.1 for computing equipment. Provide output KVA, switch-mode power supply rated, not less than 150% of connected load indicated. Provide one for each Central Processing Unit, Digital Signal Processor and automated control console. Provide equivalent to:
   a. Best Power Technology, Inc. "Micro-Ferrups" Series.
   b. Best Power Technology, Inc. "Axxium" Series.

~~BB. Data Patching and Related:~~ **ADD 2**

1. ~~Data Patching Jack Assemblies; jackfield two times twenty four (2x24) jacks. Meet or exceed Category 6 requirements described in TIA/EIA-568-C.2-1 as well as the Class E requirements described in ISO/IEC 11801-B.:~~
   a. ~~Leviton eXtreme 6+ Quickport Patch Panel (or equal).~~
2. ~~Provide patch cords for patch points as required.~~

~~CC. Fiber Patching and Related:~~ **ADD 2**

1. ~~Fiber Patching Jack Assemblies. Meet or exceed all TIA/EIA-568-C requirements:~~
   a. ~~Leviton Opt-X Ultra Fiber Rack Mount Enclosure (or equal).~~
2. ~~LC type adapters.~~
3. ~~Provide patch cords for patch points as required.~~

2.2 PRODUCTS

A. Major System Components **ADD 2**

DEVICE_ID	DESCRIPTION	MANUFACTURER	MODEL	ACCESSORIES
ALA	ASSISTIVE LISTENING ANTENNA	WILLIAMS SOUND	ANT 034	
ALR	ASSISTIVE LISTENING RECEIVER	WILLIAMS SOUND	PPA SELECT PPA (R37)	HED 021
~~ALS~~	~~PORTABLE CASE~~	~~PELICAN~~	~~1450~~	
ALT	ASSISTIVE LISTENING TRANSMITTER	WILLIAMS SOUND	PPA T45	
~~ANT~~	~~ANTENNA~~	~~SHURE~~		
BDP1 (OFCI)	BLU-RAY DISC PLAYER	~~SONY~~	~~BDP-S1500~~	
CAM	POE CAMERA	AXIS	P5515 PTZ	T94A03L RECESSED CEILING MOUNT KIT
CPU (OFCI)	CENTRAL PROCESSING UNIT	~~DELL~~		
CT1	CONTROL	EXTRON	MLC 104 IP PLUS~~100~~	
CVM (OFCI)	COMPUTER VIDEO MONITOR	~~DELL~~		
DC (OFCI)	DOCUMENT CAMERA	~~ELMO~~	~~TT-12iD~~	
HS	FOLDING HEADPHONES	WILLIAMS SOUND	HED 021	
KB (OFE)	KEYBOARD			
LEC1(OFCI)	LECTERN	SPECTRUM INDUSTRIES	55357BKBS10112010	
LPM	LAPEL MICROPHONE	SHURE	WL185	

M (OFE)	MOUSE	MICROSOFT COMPATIBLE		
DEVICE_ID	**DESCRIPTION**	**MANUFACTURER**	**MODEL**	**ACCESSORIES**
M1	MICROPHONE INPUT	FSR	T3-MJ	
MIC1	MICROPHONE	SHURE		
NI1	NETWORK INTERFACE	GLOBAL CACHE	GC-100-06	
NI2	NETWORK INTERFACE	GLOBAL CACHE	IP2CC	
NL	NECK LOOP	WILLIAMS SOUND	NKL 001	
~~PA100/2V~~	~~POWER AMPLIFIER~~	~~EXTRON~~	~~XPA 1002 70V~~	-
~~PA30/2V~~	~~POWER AMPLIFIER~~	~~EXTRON~~	~~MPA 152 PLUS~~	
PEC#	PORTABLE EQUIPMENT CASE	PELICAN	1450	
PJS1	PROJECTION SCREEN	DRAPER	ACCESSFITV	IMAGE AREA 8.5' X 5.3'
RX1	RECEIVER	EXTRON	DTP HDMI 4K 230 Rx	
SC1	CEILING SPEAKER	ATLAS SOUND	FAP63T	
SYSW1	SYSTEM SWITCHER	EXTRON	IN 1608 MA 70	
TTP1	TABLE TOP PANEL	EXTRON	CABLE CUBBY 7~~5~~00	WITH INSERTS
TTP2	TABLE TOP PANEL	EXTRON	CABLE CUBBY 202	WITH INSERTS
TX1	TRANSMITTER	EXTRON	DTP T DWP 4K 232 D	2 GANG BOX FOR UNDER TABLE MOUNTING
TX2	TRANSMITTER	EXTRON	DTP HDMI 4K 230 Tx	
VD50	VIDEO DISPLAY	NEC	E505	CHIEF LSM1U MOUNT AND REQUIRED HARDWARE, CHIEF PAC138
VD70	VIDEO DISPLAY	NEC	E705	~~BMS~~ CHIEF LSM1U ~~CTAWA-LOCII~~ AND REQUIRED HARDWARE, CHIEF PAC138, NEC OPS SB-03TM
VPJ1	VIDEO PROJECTOR	CASIO	XT-UT310WN	BMS CTAWA-LOCII MOUNT AND REQUIRED HARDWARE
VPJ2	VIDEO PROJECTOR	CASIO	XJ-M246	BMS CTAWA-LOCII AND REQUIRED HARDWARE
WB	WIRELESS BELT-PACK	SHURE	UR1	
~~WLMC~~	~~PORTABLE CASE~~	~~PELICAN~~	~~1450~~	
WMR1	WIRELESS MIC RECEIVER	SHURE	ULSX4	

B. The above list of Major System Components only outlines the major items necessary to allow the system to function as designed. It lists no power supplies, balancing transformers, power splitters, modular cards or other auxiliary components required to achieve a functioning system. Contractor is required to supply all components needed to provide a complete and operable system as outlined in the contract documents. The full set of construction documents are to be used when preparing a bid. This list is not intended to provide a full bill of materials.

C. Patch bays shown on plans and elevations are for placeholder information only. Contractor is to determine the exact amount of patch needed as per single line diagrams.

2.3 FINISHES

A. Any item or component of the Work of this Section which is visible shall comply with the following. Finishes noted or scheduled on the Contract Drawings shall take precedence. Submit all color samples of all items visible to public for approval.
   1. Where finishes are not noted or otherwise defined in the Contract Documents, submit manufacturer's standard finish samples for selection by the Owner.
   2. Paint loudspeaker cabinets to match exactly the surrounding and adjacent surfaces. Submit paint sample to Owner's representative for approval.
   3. Unless otherwise noted, receptacle or device plates subject to connection or operating force shall be stainless steel or hard anodized aluminum. Provide plates which generally match the appearance of project standard receptacle or device plates in view in the same area. For anodized aluminum, submit samples of standard colors for selection by Owner.
   4. Operating panels shall be steel, primed, painted with thermosetting epoxy paint, with legends silk-screened in contrasting color, and coated with clear epoxy thermosetting coating; or aluminum, hard anodized, with legends engraved and filled with contrasting color, all coated with clear epoxy thermosetting coating.
   5. All steel surfaces shall be treated with primer equivalent to zinc phosphate and finish painted with baked enamel or painted with a thermo setting epoxy paint.
   6. All aluminum surfaces, except those used as operating surfaces, shall be anodized and then painted with a thermo setting epoxy paint.

B. Custom Fabricated Plate Screws
   1. Match the finish of the screws used to mount the custom fabricated plates with the finish of the custom fabricated plate.

C. Ceiling Loudspeaker Grilles
   1. Paint loudspeaker grilles to match exactly the surrounding and adjacent surfaces (when speakers are recessed). Apply paint to permit servicing of loudspeakers without damage to finish of adjacent or adjoining surfaces. Provide uniform appearance. Do not obstruct grille openings with paint. Submit paint sample to Owner's representative for approval.

D. Manufacturer's logos
   1. Remove all manufacturers' names, logos, or other symbols from speakers or other objects placed in view of the public.

2.4 ALTERNATIVES AND SUBSTITUTES

A. Substitutions of equal equipment beyond the alternatives listed will be permitted only in accordance with Division 1. If a requested substitution requires a change in any of the contract drawings, a revised drawing must be submitted as part of the substitution request. The Owner's Representative will be the final judge of the acceptability of substitutions. The burden of proof of equivalence is the responsibility of the Contractor.

B. Acceptance of a product shall not, in any form or manner, relax the system performance requirements of this Specification and the performance characteristics of the product.

C. The Contractor shall submit for review a complete list of proposed substitutions for approved equipment listed in Part 2.

D. For all substitutions, the Contractor shall provide the manufacturer's independent test data to demonstrate that the proposed alternatives to the approved equipment comply with the specifications. Specifications shall contain at least all information available for the specified product.

E. The Contractor shall submit a description and drawings showing all changes to the Contract Documents that the proposed substitution will require for proper functionality and operation.

F. Proposed substitutions shall not affect dimensions shown on the Contract Document except as submitted for review and approved by the Owner.

G. Any redesign or construction costs required to integrate the proposed substitution shall be the responsibility of the Contractor. Any costs incurred by the Owner, Owner's representatives, Architect, Engineers or Consultants attributable to the integration of a proposed substitution shall be borne by the Contractor.

H. Any proposed substitution shall have no adverse effect on other trades, the construction schedule or specified warranty requirements.

I. The functionality, performance, general appearance and quality of the proposed substitution are equivalent to or superior to those of the specified item.

J. Any change to the Contract (deductive or additive cost) associated with a proposed substitution shall be submitted to the Owner for review at the time the substitution is proposed and accompanying a substitution request documentation.

K. The Contractor will provide the same warranty for the substitution that the Contractor would for the specified product.

L. The Contractor will coordinate the installation of the accepted substitute, making such changes as may be required for the Work to be complete in all respects equal to the designed system before the substitution was made. In the event that the substituted material or equipment fails to meet performance testing standards after installed, the Contractor will replace substituted material or equipment with those initially specified.

PART 3 - EXECUTION

3.1 GENERAL

A. Perform the Work of this Section in accordance with acknowledged industry and professional standards and practices, and the procedures specified herein.

B. Furnish and install (herein, "provide") all materials, devices, components, and equipment required for complete, operational systems.

C. Contractor is to supervise the installation of back boxes and terminal cabinets installed by the Division 26 Contractor. Contractor is to verify that correct boxes are installed in their proper locations before any drywall has been installed.

3.2 EXAMINATION

A. Immediately report to the Consultant any discrepancies between the specifications and drawings. This includes discrepancies between the technical specification documents and actual field dimensions or findings that may hinder installation work, conflict with other trades, or cause delays.

B. Carefully examine all details that affect all aspects of the systems described in the specifications and drawings.
   1. Examine, coordinate and confirm all drawings and details.
   2. Examine, coordinate and confirm all electrical power requirements, conduits, raceways, boxes, and etc.
   3. Examine, coordinate and confirm work of other trades that may influence the outcome of the design, specification, and performance of the systems.

3.3 PREPARATION

A. This installation section is only meant as a guideline for the Contractor. The Contractor shall be responsible for executing all installation work in a manner that is in accordance to industry-accepted standards or governing codes, whichever is more stringent. Installation activities shall be executed in an organized and orderly manner. These steps include, but are not limited to, pre-delivery testing, delivery, unloading, installation, equipment / cable labeling, programming, set-up / calibration / alignment / adjustment, testing, commissioning, training, and documentation.

B. Protect all existing work surfaces, furniture, equipment, fixtures and etc. before commencing installation work. Any damage to the existing physical and electrical property due to installation work shall be the responsibility of the Contractor.

C. Immediately hand over any de-installed equipment to the Owner for disposal or safe-keeping.

D. Carefully remove any obstructions such as fixed seating, ceiling tiles, furniture, equipment and etc. that would obstruct or hinder the installation work. Damage caused by undue care in moving these items shall be responsibility of the Contractor.

E. Examine, coordinate, and confirm the cleanliness of the work site before commencing the portion the installation work that involves dust-sensitive electronic or electrical equipment such as audio mixers, switchers, projectors, control processors, computers, cameras, etc. Dust-sensitive equipment that is installed in a work site with a lot of air borne dust and dirt shall be properly protected. For example, a video camera on a wall-mounted bracket is protected by a clean plastic bag to prevent dust from contaminating it. Seal the bag's opening using adhesive tape.

F. Prior to commencing installation work, ensure that the surrounding areas are clean and promote ease of installation work.

G. Ensure that all equipment rack and equipment locations are clean before commencing installation work.

H. Unless specified otherwise, furnished products / equipment shall be tested, delivered and installed. And, all systems shall be tested and commissioned to fully operational and properly configured condition.

I. All electrical equipment shall be burned-in or tested at the Contractor's shop before delivery. This pre-installation test shall reveal any equipment that is faulty, malfunctioning or dead out of the box ahead of time.

J. All radio frequency (RF) operated devices shall be tested on-site prior to installation to determine blind spots, RF interference, or any other transmission / reception problems. The Contractor shall be responsible for costs associated with providing additional support or accessory equipment (antennas, amplifiers, cables, etc.) and / or services to improve signal transmission / reception.

K. Provide all support equipment (ladders, man-lifts, tools, etc.) required to complete the installation work in a safe and expeditious manner.

L. Obtain any plan approvals, permits and licenses required by inspection authorities prior to execution of any installation work. The Contractor shall be responsible for all associated fees and costs incurred while fulfilling this requirement.

M. Ensure that all equipment is accessible for operation and maintenance work. Under no circumstance shall equipment be inaccessible or inconveniently located.

N. Aside from the systems' operational features, provide equal attention to the overall aesthetics of the installed equipment and cabling. Special attention to aesthetics shall be extended to equipment or cabling in public spaces.

O. Firmly secure all fixed equipment and hardware in place and ensure that they are plumb and / or square. An exception to this shall be portable or movable equipment.

P. Structurally mounted equipment: All equipment shall be mounted in accordance to all applicable safety codes, standards and practices. The one that provides for the most stringent rule shall prevail. All mounting hardware shall have a load rating by, at least, a factor of 5 (500% or greater) in reference to the weight of the equipment to be mounted or suspended. An exception to the rule shall be existing local safety codes or standards requiring greater load capacities.

Q. Seismic restraints: Abide by all the seismic restraint requirements described in all applicable building codes in force at the work site. If no provisions exist for a particular situation, follow these minimal recommendations.
   1. Fixed equipment: Mount and brace to the building structure to minimize potential hazards to personnel and damage to property during any kind of seismic event.
   2. Floor mounted equipment: Bolt equipment securely to the floor to prevent from toppling during any kind of seismic event
   3. Vertical-mounted columns: Apply braces to the vertical column in four opposing directions back to the mounting surface. This will minimize sway in any direction. Provide a separate, flexible restraint (e.g. aluminum braided aircraft cable) with a capacity of 5 times the weight of the total mounting system. The same applies to the anchor to which the flexible restraint is attached and the method of attachment to the structure.
   4. No equipment, equipment supports, or mounts must fail before the structure fails.
   5. Seismic restraint measure must not interfere with fire stopping.
   6. Notwithstanding compliance with these minimum recommendations, it is the Contractor's responsibility to ensure that the seismic restraint measures taken are adequate for the circumstances, including, if required, verification by an independent structural engineer. The cost of all such engineering shall be the responsibility of the Contractor.
   7. Penetration of the Slab: Verify that any mounting or restraint work that requires deep or thorough penetration of the slab shall not damage embedded materials including, but not limited to, slab tensioning devices or conduit. Verify the slab by X-ray or other method before proceeding. The Contractor shall be responsible for all costs associated with this investigation.

3.4 INSTALLATION

A. Follow manufacturer's instructions for installing, operating, configuring, and programming their equipment. Do not perform modifications to equipment that would void its warranty.

B. Pull and terminate all cables, and interconnect all equipment and components in accordance with approved drawings. Install audio-visual cover plates and faceplates onto all boxes.

C. Loudspeaker Assembly Installation
   1. Loudspeakers:
      a. Verify proper installation of loudspeaker enclosures and related support.

b. Verify that no loudspeaker assembly is subjected to stresses or loading effects in any way contributing to possible extraordinary failure.
c. Connect loudspeaker assemblies to the appropriate 70 volt-line transformer tap as applies. Verify specified polarity. Use insulated crimp connectors or insulated "bobtail" splices applied with manufacturer's recommended ratchet tooling. Wago Wall-Nuts 773 Series or equal are acceptable. Wire nuts or "Scotchlock" connectors shall not be acceptable.
d. Verify that loudspeaker grille openings and loudspeaker components are clear of paint after finishing.
e. Perform preliminary loudspeaker tests specified herein. Correct non-conforming conditions.
f. Adjust 70 volt-line transformer taps as required to realize uniform sound pressure level as specified herein. Document final 70 volt-line transformer taps on the Record Drawings.
g. Correct all conditions giving rise to noise, rattle or other extraneous sounds owing to operation of a loudspeaker assembly under any specified operating condition.

D. Video Projectors
1. Projectors shall be centered laterally to the projection screens.
2. Projectors shall be mounted such that digital keystone compensation shall not be required.
3. Selected projectors shall have lamp replacement and filter cleaning doors located in such a way that these items may be serviced while the projector is installed.
4. Projectors shall be mounted such that their optical zoom settings shall not be set at either their widest nor narrowest extreme, but shall be used in their mid-range.

3.5 LABELING AND IDENTIFICATION

A. All cables and connecting blocks shall be clearly, logically and permanently marked and identified by the following means:
1. Use cable labels similar to the Panduit Polyolefin Self-laminating Labels for inkjet or laserjet printers or any other means acceptable to the Consultant. Cable labels should be machine printed and not handwritten.
2. Cable labels should be placed approximately 12 cm. from each end of the cable.
3. Labeling conventions shall be clear, logical, and must be acceptable to the Consultant.
4. Include all cable identification numbers on all wiring diagrams and cable schedules.
5. For fiber optic cables, use cable identification products such as the Panduit Labelcore series or any other means acceptable to the Consultant.
6. For connector and terminal blocks, label using any means acceptable to the Consultant.

B. All cover plate, switches, panels, outlets, etc. labeling shall be engraved and filled, or silk-screened or by any other means acceptable to the Consultant. Do not use Dymo, Brother, or other similar labeling products.

C. Protective Devices
1. Identification of fuses and circuit breakers shall indicate protected circuitry, rating of protective device and voltage across open circuited protected device.

D. Panels and Receptacles
1. Panel surfaces shall be engraved and filled or silk screened with identification, or shall be provided with 1/16 inch (minimum) thick laminated plastic labels with engraved block characters at least 1/8 inch high fastened to the equipment by stainless steel screws or rivets. Provide white characters on black background unless otherwise noted. Embossed plastic (Dymo) labels shall not be acceptable.

E. All equipment shall be labeled in a clear, logical manner or by any other means acceptable to the Consultant.

1. For Control Knobs and Sliders: Use 6mm (1/4") round labels, such as the Avery 057xx series, to indicate level settings. Neatly draw an arrow on the label using a fine tip permanent marker to accurately indicate the position of the control knob. If a control knob or slider has multiple level settings, use a logical and consistent color scheme to identify each setting. Illustrate all equipment settings in the Operation Manual.
2. For equipment identification, use 'badges' made of aluminum or plastic or any other acceptable material with engraved and filled, or silk-screened labeling. Stick these badges using industrial-strength doubled-sided 3M adhesive tape. Note: Label schemes should be clear, logical, and simple or by any other means acceptable to the Consultant. Indicate equipment labeling schemes on all elevation and plan drawings showing the front and / or rear of the equipment racks. The reader should be able to easily reference the label description to specific equipment in the Operation and / or Maintenance Manuals.

3.6 WIRING

A. General
   1. This section does not apply if the drawings incorporate a wire schedule.

B. Audio Signal Wiring Classification:
   1. Type A-l: Microphone level wiring less than -30 dBu, 20 Hz to 20 kHz.
   2. Type A-2: Line level wiring -30 dBu to +24 dBu, 20 Hz to 20 kHz.
   3. Type A-3: Loudspeaker level or circuit wiring greater than +24 dBu, from 20 Hz to 20 kHz.

C. Video/Graphics and Related Signal Wiring Classification:
   1. Type V-1: Baseband and composite video wiring 1 volt peak-to-peak into 75 ohms, 0 to 100.0 MHz.
   2. Type V-2: Synchronization and switching pulse wiring 4 volts peak-to-peak into 75 ohms, 15.62 to 15.75 kHz.
   3. Type V-3: Color subcarrier wiring 0 to 4 volts peak-to-peak into 75 ohms, 3.57 to 4.43 MHz.

D. Control Signal Wiring Classifications:
   1. Type C-1: DC control wiring 0 to 50 volts.
   2. Type C-2: Synchronous control or data wiring 0 to 40 volts, peak-to-peak.
   3. Type C-3: AC control wiring 0 to 48 volts, 60 Hz.

E. Additional Wiring Classifications:
   1. Type M-1: DC power wiring 0 to 48 volts.
   2. Type M-2: AC power wiring greater than 50 volts, 60 Hz.

F. Wiring Combinations: Except as indicated herein, conduit, wire ways and cable bundles shall contain only wiring of a single classification. The following combinations are acceptable in conduit, or cable harnesses. Additional acceptable combinations may be indicated on the Contract Drawings.
   1. Types A-1, C-1, and M-1.
   2. Types A-2, C-l, C-2, and M-l, runs less than 20 feet.
   3. Types A-2, C-1, and M-1.
   4. Types A-3, C-1, C-2, and M-1.
   5. Types A-2, V-1, and V-3.
   6. Types V-1, V-2, V-3, and C-1.
   7. Types M-2 and C-3.

3.7 WIRE AND CABLE INSTALLATION

A. Provide permanent identification of run destination at all raceway terminations.

B. All wire and cable shall be continuous and splice-free for the entire length of run between designated connections or terminations.

C. All shielded cables shall be insulated. Do not permit shields to contact conduit, raceway, boxes, panels, connector shell or equipment enclosures.

D. Within buildings, make splices only in designated terminal cabinets and/or on designated equipment backboards. Outside buildings, make splices only in designated manholes and/or hand holes. Protect splices outside of buildings with splicing kits equivalent to Scotch-cast Re-enterable. Make splices only with connectors or terminal devices specified herein. Document all splices on Record Drawings.

E. Verify that all raceway has been de-burred and properly joined, coupled, and terminated prior to installation of cables. Verify that all raceway is clear of foreign matter and substances prior to installation of wire or cable.

F. Inspect all conduit bends to verify proper radius. Comply with Code for minimum permissible radius and maximum permissible deformation.

G. Apply a chemically inert lubricant to all wire and cable prior to pulling in conduit. Do not subject wire and cable to tension greater than that recommended by the manufacturer. Use multi-spool rollers where cable is pulled in place around bends. Do not pull reverse bends.

H. Provide a box loop for all wire and cable routed through junction boxes or distribution panels. Provide tool formed thermal expansion loops at cable at manholes, handholes and at both sides of all fixed mounted equipment. Cable loops and bends shall not be bent at a radius greater than that recommended by the manufacturer.

I. Secure all wire and cable run vertically for continuous distances greater than 30 feet. Secure robust non-coaxial cables with screw-flange nylon cable ties or similar approved devices appropriate to weight of cable. For all other cables, provide symmetrical conforming nonmetallic bushings or woven cable grips appropriate to weight of cable.

J. All Category type cable, connectors and plugs shall be color coded for easy visual distinction. Color coded insert type boots shall be installed on all Category type plugs. A colored coded ring will be provided on all chassis connectors (i.e. Neutrik ACRF-#). Cable connecters shall be equipped with Neutrik BSE-# color coded bushings. The Color code shall be as follows:
   1. Digital Video / AV UTP =Green
   2. LAN =Yellow
   3. Audio Network =Red
   4. AV Local Area Network =Orange
   5. Digital Media =Blue
   6. Computer Training KVM =Grey
   7. AV UTP =White

3.8 CONNECTOR AND SIGNAL POLARITY CONVENTION

A. Maintain consistent absolute signal polarity at all connectors, patch points and connection points accessible in the system. Where applicable, a positive polarity electrical signal shall yield positive acoustic pressure from the loudspeakers.

B. Audio signal connector convention: AES14-1992 (ANSI S4.48-1992) AES standard for professional audio equipment - Application of connectors, Part 1, XLR-type polarity and gender.

Signal	Connector	Wire
Signal Phase	Pin 2	Red or White
Signal Anti-Phase	Pin 3	Black
Signal Ground	Pin 1	Drain Wire

C. Video and RF/MATV Connector Convention:

Signal	Connector	Wire
Signal Phase	Center Pin	Center conductor
Signal Anti-Phase	Shell	Shield
Signal Ground	Shell	Shield

D. Voice/Data Connector Convention: Comply with EIA/TIA-568C.

3.9 WIRING PRACTICE

A. Land all non-coaxial field wiring entering each equipment rack at specified terminal devices prior to connection to any equipment or devices within racks. At Contractor's option, such terminals may be located in the equipment racks or at backboards provided. Coordinate such selection with Project construction sequence and test procedures specified herein.

B. Identify all wire and cable clearly with permanent labels wrapped about the full circumference within one inch of each connection. Indicate the number designated on the associated field or shop drawing or run sheet, as applies. Assign wire or cable designations consistently throughout a given system. Each wire or cable shall carry the same labeled designation over its entire run, regardless of intermediate terminations. Provide any of the following:
   1. Continuous permanent imprint; equivalent to Clifford of Vermont, Inc. "Quik-Pull".
   2. Direct hot stamp.
   3. Heat shrinkable factory hot stamped; equivalent to Brady sleeve Heat shrink.
   4. Adhesive strip printed labels wrapped the full circumference of the wire and sealed with clear heat shrink tubing; equivalent to Thomas and Betts or Panduit Insta-code with clear heat-shrunk tubing equivalent to Alpha.

C. Apply all crimp connectors only with manufacturer's recommended ratchet type tooling and correct crimp dies for connector and wire size. Plier type crimp tooling shall not be acceptable.

D. Coordinate insulation displacement (quick connect) terminal devices with wire size and type. Comply with manufacturer's recommendations. Make connections with automatic impact type tooling set to recommended force.

E. Make all connections to screw-type barrier blocks with insulated crimp-type spade lugs. Lugs are not required at captive compression terminal type blocks. Provide permanent designation strips designed for use with the terminal blocks provided. Make neat, intelligible markings with indelible markers equivalent to "Sharpie".

F. Tin terminated shield drain wires and insulate with heat shrinkable tubing.

G. Use only rosin core 60/40 tin/lead solder for all solder connections.

H. Dress, lace or harness all wire and cable to prevent mechanical stress on electrical connections. No wire or cable shall be supported by a connection point. Provide service loops where harnesses of different classes cross, or where hinged panels are to be interconnected.

I. Termination and build out resistors and related circuit correction components shall be visible. Do not install in connector shells or internally modify equipment. Show locations on Record Drawings.

J. Correct any and all of the following unacceptable wiring conditions:
   1. Deformed, brittle or cracked insulation.
   2. Insulation shrunken or stripped further than 1/8-inch away from the actual point of connection within a connector, or on a punch block.

3. Cold solder joints.
4. Flux joints.
5. Solder splatter.
6. Non-grommet, non-bushed, or non-insulated wire or cable entries.
7. Deformation or improper radius of wire or cable

3.10 SIGNAL GROUNDING PROCEDURES

A. Comply with National Electrical Code.

B. Unless otherwise noted maintain a unipoint ground scheme.

C. Signal and electrical system grounds shall be isolated except at the Project ground field connection.

D. Equipment enclosures shall not be permitted to touch each other unless bolted together and electrically bonded.

E. Ground and bond equipment racks and similar equipment enclosures containing powered equipment exclusively via the Isolated Ground conductors provided under Division 26. INSULATE RACK MOUNTING, ANCHORAGE, AND RACEWAY CONNECTIONS.

F. At each rack, provide an Isolated Ground bus within the rack. At each rack, provide a lug bonded to the rack frame with a #8 TW stranded wire to the rack Isolated Ground bus.

G. At each ensemble of racks, provide a single labeled Isolated Ground tubular-clamp bus bar terminal strip to land the individual rack Isolated Ground bus ground conductors. Connect the main Isolated Ground conductor from the Technical Power panel board at this point.

H. Equipment signal ground shall be to the Isolated Ground System via the green wire of the equipment power cord. Where equipment uses two wire power cord, provide #12 green bond wire to rack IG bus bar. At equipment, provide crimp lug and suitable hardware for bonding.

I. Shielded cables of this section shall be grounded exclusively to Isolated Ground by a single path. Shield shall be tied to Isolated Ground at one end only, i.e., at the low potential (receiving) end of run, unless otherwise noted.

J. Unless otherwise noted, at audio jackfields, tie source shield at jackbay frame. Float shields at connections to output jacks. Bus each row of jack frames and run individual #12 green ground wire for each row to rack IG bus bar.

K. Signal Ground provisions shall realize less than 0.15 ohms to the primary ground connection.

3.11 EQUIPMENT ENCLOSURE (RACK) AND EQUIPMENT BACKBOARD FABRICATION

A. Combustible material, other than incidental trim of indicated equipment, is prohibited within equipment racks.

B. Within each equipment enclosure, provide a full-height multi-circuit ISOLATED GROUND outlet strip with branch circuit count as shown on drawings; locate on the left side of the equipment enclosure, as viewed from the rear. In each enclosure provide number of receptacles required by present and future equipment indicated on drawings, plus at least two spare receptacles. Provide flexible steel raceway and junction box for connection of power service. Bond internal raceway to rack frame.

C. Provide a permanent label on the front of each equipment rack including the rack designation, and the circuit breaker number and associated electrical distribution panel designation servicing same.

D. Maintain separation of wiring classifications as specified herein. Separately dress, route and land microphone and line level cables and related on the right side of the equipment enclosure, as viewed from the rear; dress, route, and land loudspeaker level and control cables on the left side of the equipment enclosure, as viewed from the rear.

E. Access shall not require demounting or de-energizing of equipment. Install access covers, hinged panels, or pull-out drawers to insure complete access to terminals and interior components.

F. Fasten removable covers containing any wired component with a continuous hinge along one side, with associated wiring secured and dressed to provide an adequate service loop. Provide an appropriate stop locks to hold all hinged panels and drawers in a serviceable position.

G. Provide permanent labels for all equipment and devices. Where possible, fasten such labels to the rack frame or to blank or vent panels which will remain in place when active equipment is removed for possible service.

H. At jackfields, provide service loop to permit removal of jackfields from rack sufficient to conveniently access all jack contacts for routine cleaning and maintenance. Organize the service loop and harness such that reasonable reconnection of jacks and jack normals is possible without cutting apart the harness.

I. Coordinate the design and execution of wire harnessing of multi-bay rack ensembles with conditions of delivery to installation locations at Project Site, and with the requirement herein for test of the completely wired system in the shop prior to delivery to the Project Site. Organize the wiring harnesses such that they will fold within one shippable unit without risk of damage, or provide polarized multipin connectors and related interconnect systems as specified elsewhere herein.

J. At each equipment backboard, provide UL Listed surge suppressing multi-outlet assembly with at least six receptacles.

3.12 ADJUSTING AND TESTING

A. Test Equipment
   1. Furnish, store and maintain test equipment at the fabrication shop and the job site for both routine and Acceptance Testing of the Work of this Section. Maintain all test equipment at the job site while work is in progress from installation of equipment racks until Owner Acceptance of this Work; thereafter remove all of this test equipment from the job site. Provide all required test cables, jigs and adapters. Provide at least one of the following items or approved functional equivalents:
   2. Audio Systems:
      a. Wide Band Oscilloscope (Tektronix THS700 Series).
      b. True RMS Analog / Digital Volt-Ohm Multimeter (Fluke 187 Series or equal).
      c. Low Distortion Audio Frequency Sine Wave Oscillator (Gold Line TS1).
      d. Measurement Microphones (Earthworks M30, Bruel & Kjaer 4007, Josephson 550).
      e. Sound System Optimization and Acoustic Measurement Analyzer (Goldline TEF, Meyers SIM, SIA Smaart, WinMLS, EASERA).
      f. Harmonic Distortion Analyzer (Sound Technology or Tektronix AA 501A) or Swept Spectrum Analyzer, HP 3580A, or Swept Test System, Audio Precision or Neutrik).
   3. Video Systems:
      a. Wide Band Oscilloscope (Tektronix THS700 Series).
      b. Sync & Test Generator (Tektronix 1470).
      c. Waveform/Vector Monitor (Tektronix 1740).
      d. Color Picture Monitor, Precision.
   4. Communications and Related:
      a. Level II, Cat5e Cable Pair Tester (Microtest, HP, Scope, Fluke or Siemons set up to meet Category 5e parameters).

b. Outside Plant Voice Cabling Plant Tester – capable of detecting shorts, opens, reversals, mis-wiring and crosstwists (Siemon STM-8 or equal by Mod-Tap).
c. Metallic cable pair tester (Wavetek Corporation, Instruments Division, model LANTech 100).
d. Tone Test Set.
e. Optical Time Domain Reflectometer (OTDR) for fiber optics.
f. Any other items of equipment or materials required to demonstrate conformance with the Contract Documents.

B. System Performance Testing and Adjusting Procedures
1. Upon completion of the installation of all equipment in an area, perform the following tests and record results. Verify safe and proper operation of all components, devices, or equipment, establish nominal signal levels within the systems and verify the absence of extraneous or degrading signals. Make all preliminary adjustments and document the setting of all controls, parameters of all corrective networks, voltages at key system interconnection points, gains and losses, as applicable. Submit test report. Correct all non-conforming conditions prior to requesting Acceptance Review and Testing. Perform at least the following procedures:
2. Mechanical: Verify:
   a. Integrity of all support provisions.
   b. Absence of debris of any kind, tools, etc.
3. Power and Isolated Ground: Verify:
   a. Isolation of Isolated Ground system from raceway and related ground.
   b. Grounding of devices and equipment. Integrity of signal and technical power system ground connections.
   c. Proper provision of power to devices and equipment.
4. Signal Wiring: Verify:
   a. Integrity of all insulation, shield terminations and connections.
   b. Integrity of soldered connections. Absence of solder splatter, solder bridges.
   c. Routing and dressing of wire and cable.
   d. Continuity, including conformance with wire designations on running sheets, field and shop drawings.
   e. Absence of ground faults.
   f. Polarity.
5. Use the proper sequence of energizing systems to minimize the risk of damage.
6. Audio Systems:
   a. Electronic Tests; confirm:
      1) Gain at 1 kHz.
      2) Maximum output.
      3) Input clipping level.
      4) Frequency response.
      5) Total harmonic distortion.
      6) Signal-to-Noise ratio.
      7) Signal-to-Crosstalk ratio.
   b. Electro/Acoustic Tests:
      1) Uniformity of coverage.
      2) Electronic and acoustic frequency response/one-third octave equalization. Transfer function measurement shall be as close to flat as possible. Measure at ear level. Representative of the Owner will direct final adjustment.
      3) Maximum continuous sound pressure level (in the reverberant field). Drive systems with broadband pink noise. Sustain for at least five minutes with no system damage. Measure for "A" and "C" weightings at ear level on loudspeaker axis. Turn off noise.
      4) Acoustic signal-to-noise ratio referenced to the specified maximum continuous sound pressure level in the reverberant field. Measure for "A" and "C" weightings at ear level on loudspeaker axis with mechanical systems operating. Present comparison with previous measurement.

5) Acoustic gain before feedback. Locate acoustic source (4 inch loudspeaker/pink noise generator) two feet from system microphone. Measure at system microphone position and at most distant listener position at ear level. Present comparison.

7. Video Systems:
   a. Video Monitors:
      1) Apply crosshatch. Verify linearity.
      2) Apply red field. Adjust purity.
      3) Apply SMPTE bars and PLUGE. Adjust to standards.
   b. Video Path Test: Use NTC-7 procedures. Use full field or line signals. Alternately, conduct copper time domain reflectometer test.
8. Fiber System:
   a. Fiber:
      1) Conduct optical loss test.
      2) Conduct optical time domain reflectometer test.
9. Diagnostic Monitoring System:
   a. Demonstrate complete operation.
10. System Overall:
    a. Verify levels.
    b. Provide permanent "wedge" type labels on all controls, as applies, to indicate correct settings after systems performance testing and adjustment procedures have been successfully completed.

C. Loudspeaker Assembly Testing and Adjusting Procedures
   1. Upon completion of the installation of all loudspeakers in an area, perform the following tests and record results. Correct non-conforming conditions, unless the cause is clearly outside the Work of this Section, in which case submit the apparent cause to the Owner.
   2. Loudspeaker Line Impedance: At terminal cabinets at equipment rooms, measure the impedance of each loudspeaker line. Sweep from at least 20 Hz to at least 16 kHz.
   3. Loudspeaker Polarity: Test the acoustic polarity of all loudspeakers using an Acoustic Polarity Tester.
   4. Freedom From Buzzes, Rattles and Objectionable Distortion: Individually apply to each loudspeaker line a slow sine wave sweep from 50 Hz to 5 kHz at a level of 6 dB below rated power amplifier output voltage. Listen carefully for buzzes, rattles and objectionable distortion.
   5. Uniformity of Coverage: Apply broadband Pink Noise. Adjust level to approximately 70-80 dBA at measurement locations. Measure in 4 kHz octave band at ear level. Adjust loudspeaker aiming and 70 Volt loudspeaker taps for uniformity of coverage.

D. Equipment Rack and Equipment Testing and Adjusting Procedures
   1. Conduct procedures in fabrication shop. Verify safe and proper operation of all components, devices, or equipment, establish nominal signal levels within the systems and verify the absence of extraneous or degrading signals. Make all preliminary adjustments and document the setting of all controls, parameters of all corrective networks, voltages at key system interconnection points, gains and losses, as applicable. Submit test report with color photographs of each equipment rack, front and back. Request and coordinate verification of submitted test data by the representative of the Owner. Correct all non-conforming conditions prior to shipment to Project Site. Perform at least the following procedures:
   2. Preliminary: Verify:
      a. Grounding of devices and equipment. Integrity of signal and electrical system ground connections.
      b. Proper provision of power to devices and equipment.
      c. Integrity of all insulation, shield terminations and connections.
      d. Integrity of soldered connections. Absence of solder splatter, solder bridges.
      e. Absence of debris of any kind, tools, etc.
      f. Routing and dressing of wire and cable.
      g. All wiring, including polarity and continuity, including conformance with wire designations on running sheets, field and shop drawings.

h. Mechanical integrity of all support provisions.
3. Rig temporary power and grounding: Comply with all applicable Codes, regulations and ordinances.
4. Determine the proper sequence of energizing systems to minimize the risk of damage. Energize. Burn in for at least 120 hours.

E. Telecommunications Cabling Testing
1. Perform telecommunications cabling inspection, verification, and performance tests in accordance with TIA-568-C.1, TIA-568-C.2 and TIA-568-C.3. Perform optical fiber field inspection tests via attenuation measurements on factory reels and provide results along with manufacturer certification for factory reel tests. Remove failed cable reels from project site upon attenuation test failure.
2. Visually inspect UTP and optical fiber jacket materials for UL or third party certification markings. Inspect cabling terminations in telecommunications rooms and at workstations to confirm color code for T568A or T568B pin assignments, and inspect cabling connections to confirm compliance with TIA-568-C.1, TIA-568-C.2 and TIA-568-C.3. Visually confirm Category 6 marking of outlets, cover plates, outlet/connectors, and patch panels.
3. UTP backbone copper cabling shall be tested for DC loop resistance, shorts, opens, intermittent faults, and polarity between conductors, and between conductors and shield, if cable has overall shield. Test operation of shorting bars in connection blocks. Test cables after termination but not cross-connected.
4. For multimode optical fiber, perform optical fiber end-to-end attenuation tests in accordance with TIA-568- C.3 and TIA-526-14-A using Method A, Optical Power Meter and Light Source for multimode optical fiber. For single-mode optical fiber, perform optical fiber end-to-end attenuation tests in accordance with TIA-568- C.3 and TIA-526-7 using Method A, Optical Power Meter and Light Source]. Perform verification acceptance tests.
5. Perform testing for each outlet as follows:
   a. Perform Category 6 link tests in accordance with TIA-568-C.1 and TIA/EIA-568-B.2. Tests shall include wire map, length, insertion loss, NEXT, PSNEXT, ELFEXT, PSELFEXT, return loss, propagation delay, and delay skew.
   b. Optical fiber Links. Perform optical fiber end-to-end link tests in accordance with TIA-568-C.3. E. Final Verification Tests
   c. Perform verification tests for UTP and optical fiber systems after the complete telecommunications cabling and workstation outlet/connectors are installed.

3.13 CLEANING

A. Clean each section or area of where the work was conducted after completion to permit immediate use of the area. Remove and discard all refuse, rubbish, and debris.

B. The Contractor shall ensure that all recyclable and environmentally-hazardous waste materials are disposed properly.

C. Make good all existing structures, surfaces, and utilities affected by cutting, coring, mounting, drilling, or other new work.

D. Clean all furnished equipment of dust, dirt, finger prints, smudge, and other material prior to calling for a Substantial Performance of Work Review or Completion of Work Review.

3.14 PROTECTION

A. During the installation phase and up to the date of achieving Substantial Performance of Work, protect finished or unfinished work against damage or loss. In the event of such damage or loss, immediately replace or repair such work or equipment at no cost to the Owner.

3.15 ACCEPTANCE REVIEW, TESTING PROCEDURES AND COMMISSIONING

A. Complete all Work of this Section. Submit Test Report. Submit review copies of Operating and Maintenance Manuals, less reduced set of Record Drawings. Notify the Owner in writing that the Work of this Section is complete and fully complies with the Contract Documents. Request Acceptance Review and Testing by returning Attachment “A” to the Design Consultant. The representative of the Owner will conduct Verification of Submitted Test Data, and otherwise direct testing and adjustment of this Work. These Procedures may be performed at any hour of the day or night as required by the representative of the Owner to comply with the Project Schedule and avoid conflict with these procedures from possible ongoing work of other Separate Contracts and/or the Owner's operations. Provide all specified personnel and equipment at any time without claim for additional cost or time.

B. Personnel: Provide services of the designated supervisor and additional technicians familiar with work of this Section. Provide quantity of technicians as required to comply with Project Schedule.

C. In Addition, Provide:
   1. Set of hand and power tools appropriate for performance of adjustment of and corrections to this Work.
   2. Include spare wire and connectors and specified tooling for application.
   3. Ladders, scaffolding and/or lifts as required to access loudspeakers and other high devices.
   4. Test equipment to include but not limited to:
      a. Dual channel FFT-based audio analyzer
      b. Video test generator with color bars, grayscale, alternating pixel, multi-burst, crosshatch and % windows.
      c. InfoComm Projection Shoot-Out DVD
      d. Digital Video Essential Professional DVD
      e. Category cable tester, cable length, short, open and miswire test.
   5. Complete set of latest stamped, actioned submittals of record for reference.
   6. Complete set of Shop and Project Site Test Reports.
   7. Complete set of manufacturer's original operation, instruction and service manuals for each equipment item for reference.

D. Demonstrate: Complete operation of all systems and equipment, including Portable Equipment.
   1. General
      a. Configure room for each type of event and demonstrate audio-visual system.
      b. Connection of portable equipment. (Laptop, document camera, etc.)
      c. Demonstrate to the Consultant that all functions and equipment for the system work properly when installed as a complete system.
      d. The Contractor shall demonstrate the satisfactory operation of all controls and adjustment circuits of the system.
      e. Demo room scheduling software where applicable.
      f. Room combining and dividing presets.
      g. Demonstrate system startup and shut down procedures.
   2. Audio
      a. Route audio to program speakers.
      b. Route audio to monitor speakers.
      c. Patch each audio tie line into system.
      d. Route audio signal to auxiliary speakers.
      e. Connect microphone to each panel input and route through system.
      f. Demonstrate and document gain structure through the system.
      g. Demonstrate and document with a dual channel FFT-based audio meter the following:
         1) Polarity of each driver in each cabinet.
         2) Crossover point of high, mid and low section of each loudspeaker.
         3) dB SPL levels from 1-4 kHz at various position in the audience area.
         4) dB SPL level of high, mid, low and sub frequency bandwidth at crossover.
      h. Audio routed to ceiling speakers.
      i. Audio Conferencing.

j. Wireless microphones.
k. Demonstrate that the audio system is properly time aligned and equalized.
l. Assistive listening system.
m. Production intercom system.

3. Video
   a. Route source equipment (Blu-ray Player, TV tuner, test generators, etc.) to video displays and projectors.
   b. Set up rooms for each type of event that may take place and demo each.
   c. Recording of a distance learning session.
4. Control
   a. Communication between control system and AV equipment, including feedback if device supports 2-way communication
   b. User interface operation.
   c. Password protection of user interface.
   d. Help desk features.
   e. All programmed presets.
   f. Lighting and window shade control.
5. The Contractor 's personnel and test equipment shall be made available to the Consultant in order that:
   a. Selected tests and measurements previously made by the Contractor can re-run.
   b. Other tests may be made at Consultant's discretion.
   c. Additional tests or measurements may be made due to changes in field conditions.
6. It is estimated that the acceptance tests and demonstrations will require approximately *four hours*, unless construction or installation problems or deviations from the specifications are discovered.

E. Adjust: As directed by the representative of the Owner.

F. Correct: In timely manner, failure to comply with the Contract Documents, as reasonably determined by the representative of the Owner.

G. Acceptance Documentation
   1. Official acceptance of the system covered by this specification will occur when the Design-Builder receives the following written documents:
      a. A letter from the Consultant to the Architect acknowledging Final Acceptance of the system stating compliance with all articles of the specifications.
      b. A letter from the Architect to the Contractor stating that all related work has been completed to his satisfaction. Until these documents are received, the installation is not formally complete. The official date of acceptance shall be the date of the letter from the Architect to the Contractor described above.

3.16 CLOSEOUT

A. Punch List: Perform any and all remedial work, at no claim for additional cost or time. Where required, retest and submit Test Report. Notify Owner of completion of Punch List.

B. Portable Equipment: Furnish all portable equipment and spares to the designated representative of the Owner, along with complete documentation of the materials presented. Where applicable, furnish portable equipment in the original manufacturer's packing.

C. Operating and Maintenance Data: Install framed operating and maintenance instructions. Submit Manuals.

D. Project Record Documents: Submit.

E. Keys: If applicable, replace construction locks with permanent locks. Transmit keys to Owner.

F. Training: Conduct specified training and submit training manuals.

G. Warranty: Submit Warranty dated to run from date of Acceptance of the Work of this Section.

3.17 OWNER'S RIGHT TO USE EQUIPMENT

A. Acceptance of the Work of this Section will be after completion of corrections and adjustments required by the "Punch List" which results from Acceptance Review and Testing of the completed installation. The Owner reserves the right to use equipment, material and services provided as part of the Work of this Section prior to Acceptance without incurring any obligation to Accept any equipment or completed systems until all Punch List work is complete and all systems comply with the Contract Documents; or accept any claim for additional cost or time.

Attachment "A"

NOTICE OF COMPLETION
&
REQUEST FOR FINAL INSPECTION

We hereby give notice that the work associated with the Audio-Visual system, at the project named below, is completed and fully complies with the contract documents issued to the Contractor. The required submittals below have been marked as completed.

- ☐ Programming
- ☐ Test Reports
- ☐ Operation Manual
- ☐ Maintenance Manual
- ☐ Training Manual
- ☐ Training
- ☐ Warranty Certificates
- ☐ Record Drawings

We request commissioning and verification testing be scheduled with the Owner's Representative for final system sign off. Attached is a list of test equipment for review and acceptance.

PROJECT INFORMATION

Project Name:	Project Phase:
Project Address:	

CONTRACTOR INFORMATION

Name:	Company:	
Address:		
Signature:		Date:

Note to Contractor: Provide all test equipment for final inspection as described in the specification.

Please complete and fax or email this form to Veneklasen Associates attention AV Department
Fax (310) 396-3424 Email dyoung@veneklasen.com

END OF SECTION

SECTION 275313
CLOCK SYSTEM

Reissued, Addendum #2, 09/01/2017

PART 1 GENERAL

1.1 GENERAL REQUIREMENTS AND SCOPE

A. Furnish and Install a complete new Time Synchronization System using the Primex Wireless XR Time Synchronization System.

B. Furnish and Install all system equipment, devices, accessories, and material in accordance with these Specifications and Drawing to provide a complete and operating system.

C. All Bids shall be based on the equipment as specified herein. The model designations are that of Primex Wireless, Inc. The specifying authority must approve any alternate system.

1.2 SECTION INCLUDES

A. Transmitter (Master)

B. Satellite Transmitter

C. GPS Receiver

D. System Devices
   1. Analog Clocks
   2. Digital Clocks
   3. Digital Personal Series LCD Clocks

1.3 RELATED SECTIONS

A. Division 26 “Electrical” (120 volt grounded outlet required for transmitter)

B. Division 26 Section “Common Work Results for Electrical”

1.4 REFERENCES

A. National Fire Protection Association (NFPA): 1. NFPA 70 - National Electrical Code (NEC).

B. Manufacturer Installation and User Guides.

1.5 DEFINITIONS

A. GPS: Global Positioning System, a worldwide system that employs a constellation of satellites in an integrated network to determine geographic location anywhere in the world, and which employs and transmits Universal Coordinated Time, the world’s most accurate and reliable time.

B. NTP: Network Time Protocol, used for synchronizing the clocks on computer networks and devices from either a public server or a separate server on a private local area network.

C. UTC: Universal Coordinated Time

1.6 SYSTEM DESCRIPTION

A. System shall continually wirelessly synchronize clocks and/or timers, and shall be capable of clock readouts in multiple time zones where desired.

B. System shall operate on a 72MHz frequency. The 72MHz frequency transmitter efficiently sends time synchronization signals through commercial building materials to ensure all devices receive important time updates, even for Daylight Saving Time and after a power outage.

C. The System Transmitters can be configured with a variety of power output levels to provide coverage for a single building or an entire campus.

D. The System Supports an FCC license for operation of a 72MHz transmitter result in safe and interference free operation for users.

E. System shall provide wireless time from a master time source. This time source will be the clock from a defined NTP server that the XR transmitter can access via the customer Local Area Network (LAN). The master time will be synchronized to UTC.

F. Hard Wiring for data communication will not be required to the clocks installed for the system.

G. Clocks shall automatically adjust for Daylight Saving Time.

H. Each Clock and/or timer and every other component in the system shall use both precise time and synchronized time.

I. Digital Clocks shall be synchronized to within 10 milliseconds every 10 minutes and the system shall have an internal oscillator that maintains plus or minus four seconds per day between synchronization, so that clock accuracy shall not exceed plus or minus 0.2 seconds.

J. Analog Clocks shall be synchronized to within 10 milliseconds 6 times per day when operating clock strikes 2:01 AM, 6:01 AM, 10:01 AM, 2:01 PM, 6:01 PM, and 10:01 PM, and the system shall have an internal oscillator that maintains plus or minus one second per day between synchronization, so that clock accuracy shall not exceed plus or minus 0.2 seconds.

K. The System shall include an internal clock reference so that failure to detect the master time source shall not result in the clocks failing to indicate time. Additionally, XR transmitters will have an internal battery backup of up to eight hours in the event of a power failure so that settings and the correct master time will be instantly recalled upon restoration of power.

L. System shall incorporate a “fail-safe” design so that failure of any component shall not cause failure of the system. Upon restoration of power or repair of failed component, the system shall resume normal operation without the need to reset the system or any component thereof.

M. If transmitter stops transmitting valid time signals due to power failure, the clocks will continue to function as accurate quartz clocks until a valid time signal is decoded. If signal transmission is not restored after 48 hours, the second hand will “five step” as a visual indicator that the signal has been lost. Should the clocks lose power and signal, the clocks will not function.

N. Clock Locations shall be as indicated and clocks shall be fully portable, capable of being relocated at any time.

O. System must operate in accordance with a “Radio Station Authorization”, Form FCC 601 – LM, granted by the Federal Communications Commission (FCC). This license will be issued to and held by the end user.

1.7 REGULATORY REQUIREMENTS

A. Equipment and components furnished shall be of Manufacturer latest model.

B. System shall be installed in compliance with Local and State Authorities Having Jurisdiction.

C. The end user will hold a license, known as a “Radio Station Authorization” granted by the FCC. This license grants the end user protected use for wireless transmission at the designated frequency. This license will designate a unique “call sign” for each end user.

D. Transmitter and receiver shall comply with Part 90 of FCC Rules as follows: This device may not cause harmful interference. This device must accept interference received, including interference that may cause undesired operation. Transmitter frequency shall be governed by FCC Part 90.35. Transmitter output power shall be Governed by FCC Part 90 257 (b).

1.8 SUBMITTALS

A. Product Data: Submit complete catalog data for each component, describing physical characteristics and method of installation. Submit brochure showing available colors, styles, sizes, and finishes of clocks.

B. Samples: Submit one specified system device model(s) for approval. Approved sample(s) shall be tagged and shall be installed in the work at location directed.

C. Manufacturer Instructions: Submit complete installation, set-up and maintenance instructions.

D. Floor Plans indicating the location of system transmitter(s), approved by Manufacturer, will be submitted to Owner prior to installation.

E. Operating License: Submit evidence of application for FCC Radio Station Authorization prior to installing equipment. Furnish the license or a copy of the application for the license, to the Owner/ End User prior to operating the equipment. The original license must be delivered to the Owner/ End User.

1.9 QUALITY ASSURANCE

A. Permits: Operating license for the transmitter from the FCC.

B. Qualifications: Manufacturer: Company specializing in manufacturing commercial time system products with a minimum of 30 continuous years of documented experience including 10 or more years of experience producing GPS wireless time systems.

C. Installer: Company with a minimum 5 years documented experience in the installation of commercial time systems.

D. Prior to installation a site survey must be performed to determine proper transmitter placement.

1.10 DELIVERY STORAGE AND HANDLING

A. Deliver all components to the site in the Manufacturer original packaging.

B. Packaging shall contain Manufacturer name and address, product identification number, and other related information.

C. Store equipment in finished building, unopened containers until ready for installation.

1.11 PROJECT SITE CONDITIONS

A. Clocks and/or Timers shall not be installed until painting and other finish work in each room is complete.

B. Transmitter - External Antenna: Coordinate installation of system antenna for access to the roof to comply with Safety Standards detailed in Manufacturer instructions and per Local Codes.

C. GPS Receiver: Coordinate installation of GPS receiver for access to the roof or exterior side wall per Manufacturer installation instructions

1.12 SYSTEM STARTUP

At completion of installation and prior to final acceptance, turn on the equipment; ensure that all equipment is operating properly, and that all system devices and components are functioning.

1.13 WARRANTY

Manufacturer will provide a 1-year warranty on GPS receiver, transmitter, and satellite transmitter. All other devices and components will have a 1-year warranty.

PART 2 PRODUCTS

2.1 MANUFACTURER

Primex Wireless, Inc., www.primexwireless.com. District Standard, no “or equals” or “substitutions” allowed.

2.2 SEQUENCE OF OPERATION

A. The system shall perform in the sequence of operation as described.
   1. Configure and install system appliance detailed in Manufacturer installation instructions.
   2. Configure and install system devices per Model Specifications detailed in Manufacturer installation instructions.

B. Transmitter Operation
   1. When power is first applied to the transmitter, it checks for and displays the software version. It then checks the position of the switches and stores their position in memory. The transmitter looks for the master time source.

C. Master Time Source Operation
   1. NTP Time Source: With the transmitter in NTP mode, it connects over the Ethernet to the IP address of the NTP server. This IP address is programmed into the transmitter as part of its configuration. Once the connection to the NTP server is acknowledged, it downloads time data and synchronizes its internal master clock to NTP time. The transmitter then starts to transmit its internal time once every second. The transmitter updates its internal clock in this mode once per hour.

D. Clock and/or Timer Operation
   1. After initial setup, the clock and/or timer will shut off the receiver. Six (6) times each day an Analog Clock microprocessor will activate the receiver and starting with the stored channel it will again look for a valid time signal. Every 10 minutes a Digital Clock/Timer will activate the receiver and starting with the stored channel it will again look for a valid time signal. If necessary, the clocks will resynchronize to the correct time.
   2. If an Analog clock has not decoded a valid time signal for a pre-determined number of days, it will go to a step mode. Low battery voltage is a common cause of the clock to not properly decode a time signal. If a clock goes into step mode, replace the batteries first and then determine if the clock synchronizes to master time source before attempting other troubleshooting methods.
   3. If a Digital Clock/Timer has not decoded a valid time signal for a pre-determined number of days, the display colon indicator will flash continuously until a valid time signal is received.

2.3 EQUIPMENT

A. Transmitter Equipment

Model	Antenna	Time Source
5 Watt Transmitter (49 channel)	External	NTP and GPS
30 Watt Transmitter (49 channel)	External	NTP and GPS

B. Five and 30 Watt Transmitter
   1. The transmitter shall meet all the following Specifications:

Parameter	Specification
Transmission Frequency Range	72.020 to 72.980 MHz. US: Each range is reserved by the FCC for licensed fixed mobile broadcasts.
Transmission Power at external antenna	5 watts (37 dBm) ERP and 30 watts (45 dBm) ERP
Radio Technology	Narrowband FM
Channels	Channel 1 through 16 (72.10-72..40 MHz)

Parameter	Specification
	Channel 51 through 74 (72.42 - 72.98MHz)
Channel Bandwidth	20 kHz maximum
Transition Mode	One-way communication
Data Rate	2 KBps
Operating Range	32°F - 122°F (0° - 50°C)
Exciter Output Power	+26 to +30 dBm
Frequency Deviation	+/- 4 kHz
Transmitter Power Requirements	120 VAC 60 Hz
Internal Power Requirements	5 VDC
Current Draw	5 Watt: 0.9V 30 Watt: 1.41A
Carrier frequency stability	+/- 20 ppm
Amplifier Output Bandwidth (max)	20MHz
Amplifier Gain Flatness	+/1 1db at 72 - 76 MHz
Fixed Output	5W output (37dBm) ERP 30W output (45 dBm) ERP
Harmonics (-dBc)	See FCC Part 90 requirements
Spurious	-60 dBc
VSWR (max)	1:3
Impedance	50 ohms
Connector to Antenna	N-male
Housing/Enclosure	Black metal case 22”W x 17”H x 22”D (55.88cm x 43.18 cm x 55.88cm)

2. Internal clock: Transmitter shall contain an internal clock such that failure to update time from source will not disable the operation of the clocks.
3. Transmitter shall include a surge suppressor/battery backup and a mounting shelf.
4. Transmitter shall have the following switches:
   a. Time zone adjustment switches for all time zones in the world. Includes: Eastern, Central, Mountain, Pacific, Alaska, and Hawaii.
   b. DIP Switch to allow the following configuration: Daylight Saving Time bypass option, 12-hour or 24-hour display, GPS or NTP time source, Local or LAN configuration, UTC+ or UTC-, 30 minute UTC offset option.
   c. The DIP switches and channel switches are disabled during production by the Manufacturer as the broadcast channel number and time zone are to be predetermined during the FCC licensing process based on end user location and existing wireless services operating in the area. The end user will be required to contact Primex Wireless if, for any reason, a different broadcast channel is required, since the request would require a modification of the license, requiring approval by the FCC, or if a different time source is desired.
5. Transmitter housing shall incorporate a display, which shall include the following:
   a. Time readout
   b. AM and PM indicator if 12-hour time display is set
   c. Day and date readout
   d. Time zone indicator including Standard or Daylight Savings Time
   e. On screen menu to verify diagnostics, errors, time updates, and switch settings, toggled by sequence of push buttons next to display.
   f. Status LEDs: Green to determine time broadcast, yellow which flashes in the event of lack of time update after 48 hours, red which flashes to indicate connection or internal transmitter problem. The green broadcast mode LED will be solid to indicate the transmitter is broadcasting its signal, and dark to indicate the transmitter is in standby mode and not broadcasting.

C. External Antenna

1. The antenna connects to the transmitter via a 100 foot (30.5m) 50-ohm coaxial cable.
2. 5 and 30 Watt models: External Antenna must be installed by Primex Wireless or a certified Primex Wireless installer.
3. Transmitter shall include an external antenna that meets the below specifications.

Parameter	Specification
Antenna Dimension	Radiating element 29.4 inches (747mm)
Ground Radials	41.5 inches (1063 mm)
Equivalent Flat Plate Area	0.68ft2 (0.063m2)
Polarization	Vertical
H-plane Beam width	Omni
E-plane Beam width	78 degrees (half power)
Max. Input power	75 watts@ 50 degrees
Gain	0 dBd. VSWR (max)<: 1.5
Frequency Range	68-78MHz (broadband)
Impedance	50 ohms
Lightning Protection	Direct Ground
Connector	N female
Mount	Pole or Wall Mountable. Mounting hardware supplied.
Certification	FCC Part 90 Accepted IC RSS-119 Accepted
Mask	**Note to Editor:** Select an optional antenna mast configuration listed below. See Manufacturer's instructions for penetrating mount or non–penetrating mast options. Options: Non-Penetrating Antenna Mast Kit. Installer must provide ballast material per Manufacturer instructions. Penetrating Antenna Mast Kit.
Mask Wind Survival Rating	120mph (200kph)

D. NTP Time Source

1. Transmitter will allow for either NTP time input or GPS satellite time input with use of a GPS Receiver unit.
2. Unit shall obtain current time from NTP through an Ethernet port.

E. Satellite Transmitter

1. Transmitter shall meet the following specifications:

Parameter	Specification
Frequency	72 MHz
Transmission Power	1 watt maximum
Antenna	Mounted on top of the housing, 46.0 inch L (116.8cm)
Power	Input: 120 VAC, 50/60 Hz Output: 9 volt DC
Daylight Savings Time	Bypass switch
Dimensions	5.75"L x 4.25"H x 1.25"D (14.6cm x 10.8cm x 3.16cm)
Weight	.075 lb (.34kg)
Operating Range	-32°-158°F (-36° to 70°C)

2. Satellite Transmitter shall receive the signal from a Wireless Receiver Switch and transmit the signal to the system devices in its vicinity, which are out of range from the system transmitter.
3. Transmitter shall include a wireless receiver switch, surge suppressor/battery backup and mounting shelf.
4. A 5-foot (1.52m) RS232 cable connects receiver switch to the satellite transmitter.
5. Antenna mounted on top of the switch housing, 12.5 inch L (31.75cm).

F. Transmitter Rack
   1. Transmitter rack, 3-inches (76.2mm) x 16.5-inches (419mm) x 18-inch gauge metal, epoxy covered, will be supplied.

G. Event Scheduler Pro Software (Programmable Count Down Timer)
   1. Provide scheduling software for installation and programming by Owner.
   2. Software shall be compatible with the following PC operating systems: Windows NT with Service Pack 6a, Windows NT, Windows XP, Windows Vista, and Windows 7. End user/Owner will require valid administrator rights to install the software.
   3. Software shall be provided from Manufacturer in a form of a CD, suitable for operation in Standard CD-ROM drives.

H. Analog Clocks
   1. Analog Clocks shall meet the following specifications:
      a. Analog clocks shall be wall mounted.
      b. Face shall be white. Hour and minute hands shall be black.
      c. Clock frames and lenses are of durable thermoplastic.
      d. Clocks shall have a tamper proof/theft resistant clock-lock mounting slots.
      e. Analog clocks shall be capable of automatically adjusting for Daylight Saving Time. An on-off switch located on the transmitter shall disable this function if desired.
      f. Clock shall have 120 VAC or 24 VAC power supply built into the clock assembly.
      g. If power is interrupted, the clock will stop until power resumes. Upon resumption of power, the clock will self-correct to the current time.
      h. Electric (AC) models will include a cord with pigtail.
      i. Manufacturer Time shall be automatically updated from the transmitter 6 times per day.
      j. If the transmitter stops transmitting valid time signals due to power failure, the clocks will continue to function as accurate quartz clocks until a valid time signal is decoded. If signal transmission is not restored after 96 hours, the second hand will “five -step” as a visual indicator that the signal has been lost. Should the clocks lose power and signal, the clocks will not function.
      k. Analog clock receivers shall be as follows: Receiver sensitivity: >-110 dBm, Receiver power: Dual Alkaline batteries supplied by Manufacturer or AC-powered: 24VAC or 120VAC, Antenna type: internal, Antenna gain: -7 dBd.
   2. Supply Models, Traditional Series Analog Clock
      a. Electric Model, 12.5-inches (31.75cm) Black, 24VAC or 120VAC
      b. Electric Model, 16-inches (40.64cm), Black, 24VAC or 120VAC

I. Wire Guard Accessory
   1. Provide Clock Wire Guard(s) to protect against accidental damage or vandalism with a clock wire guard accessory.
   2. Cable Connection Sealant: Radio Shack Coaxial Cable Connector Sealant 278-1645, or approved electrical grade silicone sealant.
   3. Supply the following models:
      a. 14-inches x 14-inches Analog Wire Guard (for 12.5-inch clock)
      b. 18-inches x 18-inches Analog Wire Guard (for 16-inch clock)

PART 3 EXECUTION

3.1 EXAMINATION

A. Examine Conditions with the Installer present for compliance with requirements and other conditions affecting the performance of the system and the system devices.

B. Do not proceed until unsatisfactory conditions have been corrected.

C. Verify that construction is complete in spaces to receive equipment and that rooms are clean and dry.

D. Verify that 120 volt electrical outlet is located within 6 feet (1.83m) of location of transmitter and the outlet is operational and properly grounded.

E. AC-powered devices: Verify that electrical power outlet is near location of clock or timer and the outlet is operational and properly grounded.

3.2 INSTALLATION

A. General: Install system in accordance with applicable Codes.

B. Install System Equipment in accordance with Manufacturer written instructions.

C. Provide all system equipment necessary for a complete and operable system.

D. GPS Unit (INTERNAL Antenna Transmitter Model only):
   1. Install GPS unit on roof in location indicated, in clear view of the sky.
   2. Install unit in location free from standing water and above accumulations of leaves or debris.
   3. Seal cable connection to GPS with cable connection sealant.
   4. Any added cable lengths must be protected from outside elements.

E. GPS Unit (EXTERNAL Antenna Transmitter Model only):
   1. Locate transmitter in telecommunications room in a central location in the building.
   2. Clearance around all side of the transmitter to comply with Local Building Codes.

F. Master Time Source (NTP will be used as master time source):
   1. Connect CAT6 EIA/TIA Standard Ethernet Cable from transmitter LAN port to available network drop.
   2. Set GPS/LAN DIP switch to NTP.

G. Transmitter (EXTERNAL Antenna only)
   1. Transmitter is connected to external antenna via a 50 ohm coaxial cable. Typical length – 100 feet (30.5m)
   2. Cable routing should comply with ANSI EIA/TIA-569 and Local Building Codes.
   3. If cable is routed through conduit, the conduit should be a minimum of 2 inch (50.8mm) diameter.
   4. Transmitter enclosure must be bonded to an earth ground per ANSI EIA/TIA 607, NEC Article 250, and Local Building Codes.
   5. Antenna should be mounted to a mast on the roof of the building connecting to the transmitter via a 50-ohm coaxial cable.
   6. Consult Manufacturer instruction manual for specific clearances and mounting instructions.
   7. Antenna must be bonded to an earth ground per ANSI EIA/TIA 607, NEC Article 250 and Local Building Codes.

H. Transmitter (INTERNAL Antenna only)
   1. Locate transmitter where indicated, a minimum of 2 to 3 feet (.6 to 1 meter) above the floor, away from large metal objects such as filing cabinets, lockers or metal framed walls.
   2. Transmitter(s) will be placed at locations indicated within Specifications and Drawings.
   3. Connect antenna to transmitter, using care not to strip threads.
   4. Connect power supply to the transmitter.
   5. Set the channel number on the display to correspond to the FCC license.
   6. Plug power supply into electrical outlet.

I. Analog Clocks
   1. Furnish all equipment necessary for a complete and operational system.
   2. Perform the following operations with each clock:
      a. Configure and set clock to correct time in accordance with Manufacturer instructions.
      b. Observe clock until valid signals are received and clock adjusts itself to correct time.
      c. Install each clock per its Model Mounting Specifications per Manufacturer instructions and mounting instructions at the indicated location.

J. Wire Guards
   1. Secure to wall, using approved theft-resistant fasteners.

3.3 FIELD INSPECTION

A. Inspection: Make observations to verify that system devices and components are properly labeled.

B. Prior to final acceptance, inspect each system device and component, adjust as required and replace parts which are found defective.

3.4 MANUFACTURER SERVICES

A. If needed, provide Technical Assistance as demonstrated in the Manufacturer guides, on product start-up and system setup, to Owners or Installers Representatives via phone, fax, or email.

B. Installation and User Guides shall be provided.

3.5 CLEANING

A. Prior to final acceptance, clean exposed surfaces of devices, using cleaning methods recommended by Manufacturer.

B. Remove temporary labels from clock faces. Do not remove labels from backs of clocks.

3.6 DEMONSTRATION

A. Provide Training to Owner's Representative on setting, adjusting and configuring device and routine maintenance.

B. Provide Training to Owner's Representative on installing the software, adjusting and programming the transmitter, setting and adjusting system devices and routine maintenance.

3.7 PROTECTION

Protect finished installation until final acceptance of the project.

3.8 TESTING

All Devices must be tested at their operational location under normal operational conditions to assure reception of signal.

END OF SECTION 275313

081517/1010006

SECTION 281300
ACCESS CONTROL

Revised, Addendum #2, 09/01/2017

PART 1 -GENERAL

1.1 SECTION INCLUDES

A. Head-end Hardware and Software

B. Software Only (owner-provided head-end CPU hardware)

C. Field Panels

D. Cards & Readers

E. Electric Locks

F. Request-to-Exit Devices

G. Wiring

1.2 SUMMARY

A. Labor and Materials: Unless otherwise noted in the Drawings and Specifications, the Contractor shall provide and pay for all labor, materials, equipment, tools, utilities, construction equipment and machinery, transportation and other facilities and services necessary for the proper execution, operation and completion of the Work.

B. Specification Language: Specifications and notes are written in imperative and abbreviated form. Imperative language of the technical specifications is directed at the Contractor, unless specifically noted otherwise. Incomplete sentences shall be completed by inserting “shall”, “shall be”, “the Contractor shall”, and similar mandatory phrases by inference. The words “shall be” is supplied by inference where a colon (:) is used within product specifications.

C. Drawings and Specifications:

1. Contractor shall be provided a digital copy of the Drawing Set and Specifications for his use.
2. Contractor shall carefully study the Drawings and Specifications, and shall at once report any error, unforeseen circumstances, inconsistency or omission upon discovery.
3. The Santa Ana College (SAC) Project Manager shall be the interpreter of the requirements of the Drawings and Specifications, subject to the final approval of SAC.

D. Intent and Correlation:

1. The intent of the Project Drawings and Specifications is to include all items necessary for the proper execution and completion of the Work.
2. The Project Drawings and Specifications are complementary, and what is required by any one shall be as binding as if required by both.

1.3 REFERENCES

A. Submit the project and customer information of customers for at least three other projects of similar size and complexity using similar technologies.

1. Shall include a minimum of the following:
   a. Customer Name
   b. Customer Point of Contact
   c. Customer Point of Contact Phone Number and email address
   d. Address of project
   e. Title of Project
   f. Type of project completed

B. Submit the technician certifications for the proposed access control system obtained or renewed within one year of RFP due date.

1. Shall include a minimum of the following:
   a. Two installation technicians employed by the Contractor.

b. One project manager employed by the Contractor.

1.4 DEFINITIONS

A. Industry standard words and phrases are used throughout the Drawings and Specifications, except:
   1. Words which have well-known technical or trade meanings are used in accordance with such recognized meanings.
   2. Whenever the following listed words and phrases are used, they shall be mutually understood to have the following respective meanings:

B. The words “as indicated.” means: as shown on the Drawings, and in accordance with the Specifications.

C. The words “as required.” means: as required to provide a complete and satisfactory Work in full conformance with the Drawings and Specifications.

D. The word “New” means: new Work to be provided by Contractor.

E. The word “Provide” means: furnish, install, connect, test and make ready for use.

F. The words “Relocate existing” means: remove existing item from present location. Reinstall, re-connect, and test existing item and make ready for use at new location as shown on the Drawings.

G. The words “Remove existing “means: remove existing item and return item to SAC**.**

H. The word “Replace” means: remove existing item and return item to SAC. Provide new item as indicated.

I. The word “Work”: The Work is the completed construction required by the Drawings and Specifications, and includes all labor necessary to produce such construction, and all materials and equipment incorporated or to be incorporated in such construction.

J. The word “Furnish” means: supply item as specified. Item to be installed by others.

1.5 CONTRACTOR DESIGN REQUIREMENTS

A. The Project Drawings represent the level of system design to be provided by SAC. Contractor shall provide all additional system design work required, including:
   1. Conduit layout and sizing.
   2. Wire and cable layout.
   3. Other detailed design work required.

B. Contractor’s design shall conform to all applicable codes and ordinances. All electrical design, including the sizing and placement of conduit, raceways and conductors, shall be in accordance with NFPA 70: National Electrical Code, current version, unless local codes establish more stringent requirements.

C. Contractor’s design work is subject to review and approval by SAC’s Project Manager.

D. Contractor’s design shall also include:
   1. The addition of all wire, cable, conduit, connectors and junction boxes required for system operation.
   2. The installation of conduit between the control components and all equipment at each door, as necessary.
   3. Completed “as-built” documentation of all security systems, including documentation of existing equipment, wiring, conduits, and raceways.
   4. Other Work as defined within the Project Drawings and Specifications.

1.6 PROFESSIONAL SERVICES (PSG) ***& MAINTENANCE*** ADD-2

A. Manufacturer shall provide Professional Services for direct end user support through the awarded contractor.
   1. All contractors shall provide Professional Services direct from the Manufacturer as follows:
      a. Bench Testing and Commissioning.

b. Custom reporting.
c. Human Resource Integrations.
d. Conversions.
e. Third party integrations.
f. Disaster recovery commissioning testing .

B. *Contractor shall provide a separate* **ADD-2** maintenance proposal. *Proposal* **ADD-2** should identify option for manufacturer provided Professional Services to include Life Cycle Management for ongoing system support

1. Optional elements for support should include:
   a. Program Management regularly scheduled calls to include manufacturer, integrator and end user.
   b. Routine manufacturer audits and scheduled maintenance.
   c. Manufacturer provided annual upgrade services.

1.7 SUBMITTALS

A. Product Data: Product Data submittal shall only be required if the Contractor requests a substitution or a particular brand product is not specified or recommended.

B. Procedures

1. Provide submittals to SAC's Project Manager.
2. Submit three (3) copies of each submittal.

C. Shop Drawings

1. General Shop Drawings for the project as described elsewhere.
2. Provide other Shop Drawings only if specifically requested by SAC's Project Manager.

D. Manufacturers Installation and Programming Instructions

1. Provide Manufacturers Installation and Programming Instructions as requested in the various Specification Sections.

E. Project Record Drawings

1. Definition: Project Record Drawings are drawings that completely record and document all aspects and features of the Work. (Also known as "as-built" drawings.)
2. The purpose of Project Record Drawings is to provide factual information regarding all aspects of the Work, to enable future service, modifications, and additions to the Work.
3. Project Record Drawings are an important element of this Work. Contractor shall accurately maintain Project Record Drawings throughout the course of this project. Project Record Drawings shall include documentation of all Work, including the documentation of existing equipment, wiring, conduits, and raceways that are to be reused in the Work.
4. SAC's Project Manager shall furnish Contractor with two (2) sets of site plans for Contractor's use in preparing Project Record Drawings. One set shall be used as a working set, the other shall be used to prepare the final record set.
5. Contractor shall maintain the working set of Project Record Drawings at the project site throughout the course of the Work. The working set shall be updated on a daily basis as the Work progresses.
6. Project Record Drawings shall accurately show the physical placement of the following:
   a. Equipment and devices.
   b. Conduit and raceways.
   c. Junction and pull box locations.
   d. End-of-line resistor locations.
   e. Interfaces to external equipment.
   f. Connections to power and telephone circuits.

F. Project Record Drawings shall show the physical placement of each device and conduit or aerial center line, to be accurate to within one foot (1') of the nearest landmark. Where the site plan furnished by SAC's Project Manager conflicts with actual conditions, Contractor shall amend site plan as required. Indicate exact description of conduit runs (above ground, two foot trench, along outside wall of building, etc.).

G. Project Record Drawings shall show wire and cable runs, zone numbers, tamper circuit configuration, panel/circuit breaker numbers from which equipment is powered, and splice points. Such information may be shown on the site plans.

H. Project Record Drawings shall be available for inspection by SAC's Project Manager on a daily basis. Incomplete or inaccurate Project Record Drawings may be cause for delay of Contractor's payment.

I. Upon completion of Work, and prior to Final Acceptance, Contractor shall prepare and submit to SAC Project Manager a final record set of Project Record Drawings. This set shall consist of all data transferred from the working set, supplemented by Riser Diagrams and other information. The final record set of Project Record Drawings shall be drafted by a skilled draftsperson, under the supervision of Contractor. All final Project Record Drawings shall be provided to SAC**.**

J. System Documentation

1. Definition: System Documentation is a complete collection of all installation, programming, operation, and maintenance manuals and work sheets relating to the equipment provided as part of the Work.
2. Contractor shall maintain a file of System Documentation at the project site throughout the course of the Work. Such file shall be updated with new information as equipment is received and installed. System Documentation shall be available for inspection by SAC Project Manager on a daily basis.
3. Upon completion of Work, and prior to final Acceptance, Contractor shall prepare and submit to SAC Project Manager three (3) sets of System Documentation.

K. Closeout Submittals

1. Provide a set of as-built drawings and manuals to the SAC Project Manager
   a. As-Built Drawings
   b. Mounting Details
   c. Product Data
   d. Installation Manuals
   e. Operating Manuals
   f. Maintenance/Service Manuals
2. Provide the SAC Project Manager- with all programming sheets, keys to the equipment cabinets, as-built drawings, operating manuals, maintenance/repair manuals, spare fuses, all programming sheets and keys to the equipment cabinets, tools for tamper-resistant enclosures and tools for manual resetting devices.

1.8 QUALITY ASSURANCE

A. Qualifications of Contractor

1. Contractor shall be an installation and service contractor regularly engaged in the sale, installation, maintenance and service of access control systems.
2. Contractor shall have three years' experience with the installation, start-up and programming of systems of a similar size and complexity to the one proposed.
3. Contractor shall be a factory authorized dealer of the system proposed for at least two years.
4. Contractor shall provide factory certified technicians to perform the installation of all intelligent controller components in this project. Evidence of the certification shall be in writing from the manufacturer and shall be on the technician's person at all times while on site.

B. Supervision of Work

1. Contractor shall employ a competent Foreman to be in responsible charge of the Work. Foreman shall be on the project site daily during the execution of the Work.
2. Contractor's Foreman shall be a regular employee, principle, or officer of Contractor, who is thoroughly experienced in projects of a similar size and type. Contractor shall not use contract employees or Subcontractors as Foremen.

C. Qualifications of Technicians

1. All electronic systems Work shall be performed by electronic technicians thoroughly trained in the installation and service of specialty low-voltage electronic systems.

2. Journeyman Wireman electrical workers may be used to install conduit, raceways, wiring, and the like, provided that final termination, hook-up, programming, and testing is performed by a qualified electronic technician, and that all such Work is supervised by the Contractor's Foreman.
3. All incidental Work, such as cutting and patching, lock hardware installation, painting, carpentry, and the like, shall be accomplished by skilled craftsperson's regularly engaged in such type of work. All such Work shall comply with the highest standards applicable to that respective industry or craft.
4. All 120 VAC power wiring and connections are to be performed by a qualified Journeyman Wireman, licensed to perform such Work in the SAC**.**

D. Subcontractors
1. Definition: A Subcontractor is a person or entity who has a direct contract with the Contractor to perform any of the Work at the site.
2. Use of any Subcontractor is subject to the approval of SAC. The Contractor shall identify all Subcontractors on the Bid Form. The Contractor shall make no substitution for any Subcontractor previously selected without approval from SAC**.**
3. Contractor's Foreman shall be on the project site daily during all periods when Subcontractors are performing any of the Work. Contractor's Foreman shall be in responsible charge of all Work, including any Work being performed by Subcontractors.
4. By an appropriate written agreement, the Contractor shall require each Subcontractor, to the extent of the Work to be performed by the Subcontractor, to be bound to the Contractor by the terms of the Drawings and Specifications, and to assume toward the Contractor all the obligations and responsibilities which the Contractor, by these documents, assumes toward SAC**.**

E. Supervision and Construction Procedures
1. The Contractor shall supervise and direct the Work, using his best skill and attention. Contractor is solely responsible for all construction means, methods, and techniques.
2. The Contractor shall employ a competent foreman who shall be in attendance at the project site during the progress of the Work. The foreman shall represent the Contractor and all communications given to the foreman shall be as binding as if given to the Contractor.

F. Regulatory Requirements
1. All Work is to conform to all building, fire, and electrical codes and ordinances applicable in the SAC. In case of conflict between the Drawings/Specifications and codes, the codes shall govern. Notify SAC Project Manager of any such conflicts.
2. Contractor shall secure and pay for all licenses, permits, plan reviews, engineering certifications, and inspections required by regulatory agencies. Contractor shall prepare, at Contractor's expense, any documents, including drawings that may be required by regulatory agencies.

G. Permits
1. The Contractor shall make application for and obtain any and all permits required by federal, state, county, city, or other authority having jurisdiction over the work.

1.9 DELIVERY, STORAGE, AND HANDLING

A. Security of Contractor's Tools and Equipment: SAC is not responsible for the care, storage or security of any of the Contractor's tools or equipment.

1.10 PROJECT/SITE CONDITIONS

A. Environmental Conditions
1. Power: Electrical power will be supplied by SAC to the extent that the usage is compatible with available facilities in the vicinity of the work.
2. Telephone: Contractor may use a telephone designated by SAC for local and toll-free calls. The costs of long distance calls are the responsibility of the Contractor and shall not be charged to SAC**.**
3. Rest room Facilities: Contractor may use existing Rest room facilities designated by SAC**.**

4. Parking: SAC reserves the right to limit or restrict Contractor parking based upon the daily requirements of the other contractors on site.
5. Dust Control: Make provisions to control all dust, dirt, and foreign material caused by the performance of the Work.
6. Use of explosive type fastening equipment is prohibited.
7. Notify SAC immediately of any damage or possible damage to any other equipment.

B. Clean-Up

1. Contractor shall clean-up, on a daily basis as the Work progresses, all dirt, dust and debris caused by Contractor's operations. Clean-up shall be completed by the end of each workday to the satisfaction of SAC's on-site representative.
2. In the event that Contractor fails to clean-up, SAC may elect to have clean-up performed by others, with the costs of such clean-up being charged to the Contractor.

C. Construction Aids

1. Definition: Construction Aids are facilities and equipment required by personnel to facilitate the execution of the Work. Construction Aids include scaffolds, staging, ladders, platforms, hoists, cranes, lifts, trenchers, core drillers, protective equipment, and other such facilities and equipment.
2. Contractor shall provide all Construction Aids required in the execution of the Work. Construction Aids that are the property of SAC or other contractors shall not be used without permission.
3. Storage of Construction Aids shall be coordinated with SAC's on-site representative.

D. Safety

1. The Contractor shall be responsible for initiating, maintaining, and supervising all safety precautions and programs in connection with the Work.
2. Contractor shall comply with all local, state, and federal regulations and laws for the safety of the work place.

E. Accident Reports

1. Serious or fatal accidents shall be reported immediately by telephone or radio to the **SAC**'s Project Manager.

F. Existing Conditions

1. SAC does not warrant the condition of any portion of the existing wiring, conduit or raceway systems. Prior to submitting his proposal, Contractor shall examine all existing conditions and determine to what extent the existing wiring, conduit, and raceway systems may be reused.
2. Contractor's proposal price shall include the cost of replacing existing wiring, conduit, and raceways as required.

1.11 SEQUENCING

A. Description

1. This implementation plan describes the general approach that shall be followed in order to minimize the time for the access control systems to be operational.

B. Approach

1. Contractor shall plan and schedule all work in such a sequence as to minimize the time before the system is operational. The following is a suggested work sequence:
   a. Order all equipment needed and notify any subcontractors to schedule their participation.
   b. Perform all system layout work.
   c. Insure there are an adequate number of power receptacles available to operate all security equipment and coordinate with SAC as to where power is available.
   d. Provide shop drawings to verify location of all equipment, conduit runs, power connections, etc. Submit shop drawings to SAC Project Manager.
   e. Coordinate with SAC to provide space in each building's Communications Room for mounting of processors.
   f. Provide training on how to fill out the programming sheets for access levels.
   g. Prepare and pre-test all equipment to the greatest extent possible.

h. Install all equipment.
i. Provide training on the programming other various options.
j. Test and inspect all systems.
k. Perform all other Work as required.
l. Perform the Acceptance Test.
m. Provide training.
n. Provide as-built drawings.

1.12 SCHEDULING

A. The Contractor, within five (5) days after being awarded the contract, shall prepare and submit for SAC's information, an estimated progress schedule for the Work. The progress schedule shall be related to the entire project, and shall indicate start and completion dates.

1.13 WARRANTY

A. Contractor warrants that all Work furnished (material and labor) under this Contract will be of good quality, free from faults and defects, and in conformance with the Project Drawings and Specifications.

B. Contractor shall provide a parts and labor guarantee on all Work. Unless otherwise specified herein, Contractor's guarantee shall be for a period of two (2) years from date of Acceptance, except where any specific guarantees from a supplier or equipment manufacturer extends for a longer time.

C. Contractor's guarantee shall cover all costs associated with troubleshooting, repair, and replacement of defective Work, including costs of labor, transportation, lodging, materials, and equipment.

D. Guarantee shall not cover any damage to material or equipment caused by accident, misuse, unauthorized modification or repair by SAC, or acts of god.

E. Contractor shall promptly respond to SAC's requests for service during the guarantee period. Contractor shall provide repair service as soon as reasonably possible upon request from SAC, but in no case shall service response exceed 8 hours from time of request.

1.14 SYSTEM STARTUP

A. Power shall only be applied to the system after re-checking for proper grounding of the system and measuring all loops for lack of shorts, grounds, and open circuits.

1.15 OWNER'S INSTRUCTIONS

A. Coordination with SAC
   1. Contractor shall closely schedule and coordinate his activities with designated SAC representatives.
   2. Contractor shall provide SAC's Project Manager with a work plan on a weekly basis. Such work plan will describe locations of intended activities, types of activities, and potential conflicts to facility operations.

B. SAC's Representatives

The following is SAC's designated representative:

   1. PROJECT MANAGER
      SAC's Right to Carry out the Work
   2. If the Contractor defaults or neglects to carry out the Work in accordance with the Project Drawings and Specifications and fails within seven days after receipt of written notice from SAC to commence and continue correction of such default or neglect with diligence and promptness, SAC may, after seven days following receipt of an additional written notice and without prejudice to any other remedy SAC may have, make good such deficiencies. In such case, an appropriate Change Order shall be issued deducting from the payments then or thereafter due the Contractor the cost of correcting such deficiencies.

C. Minor Changes in the Work

1. SAC shall have the authority to order minor changes in the Work not involving an adjustment in the Contract Sum or an extension of the Contract Time and not inconsistent with the intent of the Project Drawing and Specifications. Such changes shall be provided by written order.

1.16 COMMISSIONING

A. Manufacturer shall provide the opportunity for Professional Services to assist Contractor with commissioning.

B. After all Work is completed, and prior to requesting the Acceptance test, Contractor shall conduct a final inspection, and pre-test all equipment and system features. Contractor shall correct any deficiencies discovered as the result of the inspection and pre-test.

C. Contractor shall submit a request for the Acceptance test in writing to the SAC Project Manager, no less than fourteen days prior to the requested test date. The request for Acceptance test shall be accompanied by a certification from Contractor that all Work is complete and has been pre-tested, and that all corrections have been made.

D. During Acceptance test, Contractor shall demonstrate all equipment and system features to SAC. Contractor shall remove covers, open wiring connections, operate equipment, and perform other reasonable work as requested by SAC.

E. Any portions of the Work found to be deficient or not in compliance with the Project Drawing and Specifications will be rejected. SAC Project Manager will prepare a list of any such deficiencies observed during the Acceptance test. Contractor shall promptly correct all deficiencies. Upon correction of deficiencies, Contractor shall submit a request in writing to SAC Project Manager for another Acceptance Test.

F. If, at the conclusion of the Acceptance Test, all Work is found to be acceptable and in compliance with the Project Drawings and Specifications, SAC Project Manager will issue a letter of Acceptance to Contractor and SAC.

1.17 MAINTENANCE ***DOCUMENTATION*** ADD-2

A. Provide full procedures for all database back-ups.

B. Provide full procedures for server/workstation hard drive maintenance, such as defrag, etc.

C. Provide full procedures for maintaining physical and software firewalls.

D. Provide full procedures for upgrading software.

E. Provide full procedures for testing battery condition on all field panels for adequate back-up time.

F. Provide full procedures for any other tasks that must be performed to ensure the warranty remains intact.

PART 2 PRODUCTS

2.1 GENERAL

A. All products not provided by SAC shall be new and unused, and shall be of manufacturer's current and standard production.

B. Where two or more equipment items of the same kind are provided, all shall be identical and provided by the same manufacturer.

C. Drawings and Specifications indicate major system components, and may not show every component, connector, module, or accessory that may be required to support the operation specified. Contractor shall provide all components needed for complete and satisfactory operation.

D. Product Availability

1. Contractor, prior to submitting a proposal, shall determine product availability and delivery time, and shall include such considerations into his proposed Contract Time.

2. Certain products specified may only be available through factory authorized dealers and distributors. Contractor shall verify his ability to procure the products specified prior to submitting a proposal.

E. Wire and Cable
   1. General: Provide all wire and cable required to install systems as indicated. Wire and cable shall be sized to provide minimum voltage drop and minimum resistance to the devices being supplied.
   2. All cables shall be specifically designed for their intended use (direct burial, aerial, etc.).
   3. Comply with equipment manufacturers recommendations for wire and cable size and type.
   4. Comply with all applicable codes and ordinances.

F. Conduit and Raceway Systems
   1. General: The placing of surface mounted conduit on the exterior of any building shall be approved by SAC prior to its installation.
   2. Interior Conduit:
      a. Electrical Metallic Tubing (EMT)
      b. Flexible Metal Conduit
      c. Provide fittings and connectors as required for installation of EMT or flexible conduit.
   3. Surface Raceways:
      a. Sheet metal channel with fitted cover, suitable for use as surface metal raceway, WIREMOLD or approved equal.
      b. Provide fittings, elbows, and connectors designed for use with raceway system.
   4. Exterior Conduit: (any of the following as determined by local code requirements):
      a. Rigid Steel Conduit
      b. Rigid Aluminum Conduit
      c. Rigid Nonmetallic Conduit (only if buried 18" below ground surface).
      d. Intermediate Metal Conduit
      e. Provide rain-tight fittings and connectors as required for installation of exterior conduit.
   5. Exterior Flexible Conduit:
      a. Liquidtight Flexible Conduit: Flexible metal conduit with PVC jacket.
      b. Provide rain-tight fittings and connectors as required for installation of Liquidtight Flexible Conduit.

G. Junction and Pull Boxes
   1. Interior Boxes: Sheet Metal Outlet Boxes: Sizes to be determined in accordance with code requirements for conductor fill. No box shall be smaller than a single gang 1-1/2 deep. Provide box covers as required.
   2. Exterior Boxes: All exterior boxes shall NEMA 4 or NEMA 3R, watertight and dust-tight
   3. All interior and exterior boxes shall have their covers fastened using security screws.

H. Lightning Protection
   1. The Contractor shall provide suitable lightning protection for all processors/controllers.
   2. All lightning protection equipment shall be UL listed.

2.2 MANUFACTURERS

A. Requests for substitutions will be considered in accordance with provisions of Section 01 60 00 - Product Requirements.

B. Security Management System Manufacturer: Pro-Watch Security Management Suite as manufactured by the Honeywell Security Group.

C. The Security Management System shall function as an electronic access control system and shall integrate alarm monitoring, CCTV, digital and network video, ID badging and database management into a single platform. A modular and network-enabled architecture shall allow maximum versatility for tailoring secure and dependable access and alarm monitoring solutions.

D. Access Control Software Suite: The Security Management System shall offer a security management software suite available in four scalable versions: The Security Management System platform shall offer a complete access control solution: alarm monitoring, video imaging, ID badging and video surveillance control. Provide the following software system:

E. Pro-Watch Professional Edition. Professional Edition: The Security Management System shall utilize Microsoft SQL Express (SQL 2008 or later) database for applications from one to five users and up to 64 controlled doors. The Security Management System shall provide a set of tools to easily backup, restore and maintain the Security Management System database. The Security Management System shall allow for expansion to Corporate and/or Enterprise Edition without changing the user interface or database structure. The Security Management System shall operate in Windows 7 Ultimate/Professional as the host operating system.

F. Pro-Watch Corporate Edition: The Security Management System shall operate in the Windows Server 2012 (64-bit) and Windows Server 2012 R2 (64-bit) environment and utilize SQL Server 2012 SP1 (32-bit and 64-bit) as the database engine.

G. Software Requirements: The Security Management System shall be a modular and network-enabled access control system. The Security Management System shall be capable of controlling multiple remote sites, alarm monitoring, video imaging, ID badging, paging, digital video and CCTV switching and control that allows for easy expansion or modification of inputs and remote control stations. The Security Management System control at a central computer location shall be under the control of a single software program and shall provide full integration of all components. It shall be alterable at any time depending upon facility requirements. Security Management System reconfiguration shall be accomplished online through system programming. The Security Management System shall include the following:

H. Multi-User/Network Capabilities: The Security Management System shall support multiple operator workstations via local area network/wide area network (LAN/WAN). The communications between the workstations and the server computer shall utilize the TCP/IP standard over industry standard IEEE 802.3 (Ethernet). The communications between the server and workstations shall be supervised, and shall automatically generate alarm messages when the server is unable to communicate with a workstation. The operators on the network server shall have the capability to log on to workstations and remotely configure devices for the workstation. Standard operator permission levels shall be enforced, with full operator audit.

I. Concurrent Licensing: The Security Management System shall support concurrent client workstation licensing. The Security Management System application shall be installed on any number of client workstations, and shall provide the ability for any of the client workstations to connect to the database server as long as the maximum number of concurrent connections purchased has not been exceeded.

J. Security Key: The Security Management System shall only require a software security key to be present on the application server for the Security Management System to operate. Security keys shall not be required at the client workstations. The Security Management System shall allow a user to read the information that is programmed on the server security key. The Security Management System shall support the installation, update, and termination of the security key.

K. Terminal Services: The Security Management System shall support Windows Server 2008 Terminal Services. Terminal Services shall allow the Security Management System server application to reside on the Windows Terminal Server. Operating systems supporting a standard web browser shall be capable of utilizing the thin client architecture. The Security Management System shall support unlimited connections, based on concurrent licensing, to the Security Management System software. Full functionality shall be obtained through the intranet connection allowing full administration and monitoring without the need for a local installation.

L. Relational Database Management System: The Security Management System shall support industry standard relational database management systems. This shall include relational database management system Microsoft SQL Server 2012 SP1.

M. Database Partitioning: The Security Management System shall provide the option to restrict access to sensitive information by user ID.

N. Memory: Proprietary software programs and control logic information used to coordinate and drive system hardware shall be stored in read-only memory.

O. LDAP/ Microsoft Active Directory Services: The Security Management System shall provide support of Lightweight Directory Access Protocol (LDAP) for enabling the user to locate organizations, individuals, and other resources such as files and devices in a network, whether on the public internet or on a private intranet. The Security Management System shall provide a direct link to Microsoft Active Directory Services. The Security Management System shall allow the transfer of Active Directory users into the database via the Data Transfer Utility. Conversely, Security Management System users shall be capable of being exported to the Active Directory.

P. Unicode: The Security Management System shall utilize Unicode worldwide character set standard. The Security Management System shall support double-byte character sets to facilitate adaptation of the Security Management System user interface and documentation to new international markets. Language support shall include at a minimum English, Spanish, Portuguese, French, German and Simple Chinese.

Q. Encryption: The Security Management System shall provide multiple levels of data encryption

1. True 128-bit AES data encryption between the host and intelligent controllers. The encryption shall ensure data integrity that is compliant with the requirements of FIPS-197 and SCIF environments. Master keys shall be downloaded to the intelligent controller, which shall then be authenticated through the Security Management System based on a successful match.
2. Transparent database encryption, including log files and backups
3. SQL secure connections via SSL

R. Supervised Alarm Points: Both supervised and non-supervised alarm point monitoring shall be provided. Upon recognition of an alarm, the system shall be capable of switching CCTV cameras that are associated with the alarm point.

S. Compliance and Validation: The Security Management System shall incorporate signature authentication where modifications to Security Management System resources will require either a single or dual signature authentication. Administrators will have the ability to select specified devices in the Security Management System where data manipulation will be audited and signatures will be required to account for the data modification. Upon resource modification, the user will be required to enter a reason for change or select a predefined reason from a list. All data will be securely stored and maintained in the database and can be viewed using the reporting tool. This functionality will meet the general requirements of Validation and Compliance through Digital Signatures with special attention to the case of Title 21 CFR Part 11 Part B compliance.

T. Clean Room Solution:

1. Overview: The Security Management System shall provide a clean room solution which enables users to manage their "Clean Environments" or other areas requiring special restricted access through a process-oriented graphical user interface (GUI).
2. Configuration: The user shall have the capability of adding, editing, or deleting clean rooms. Each "clean room" shall be capable of having a contamination level set. Entry to a higher level contamination area shall automatically restrict access to cleaner level areas. Individual cards shall be capable of being reset on an immediate one time, automatic, or per-hour basis.

2.3 SECURITY MANAGEMENT SYSTEM OPERATIONAL REQUIREMENTS:

A. System Operations:

1. Windows Authentication Login: The Security Management System shall use an integrated login method which accepts the user ID of the person who has logged on to Windows.
2. Password: The Security Management System shall use an integrated authentication method which utilizes Windows user accounts and policies.
3. Information Access: The Security Management System shall be capable of limiting operator access to sensitive information. Operators shall have proper authorization to edit the information.
4. Shadow Login: The Security Management System shall allow users to login over a currently logged-on user without having the current user log off the Security Management System or out of the Windows operating system.

5. Graphical User Interface: The Security Management System shall be fully compliant with Microsoft graphical user interface standards, with the look and feel of the software being that of a standard Windows application, including hardware tree-based system configuration.
6. Guard Tour: The Security Management System shall include a guard tour module, which shall allow the users to program guard tours for their facility. The tours shall not require the need for independent or dedicated readers.
7. Secure Mode Verification (e.g., force guard to do a visual verify): The Security Management System shall provide ' secure mode' control from the verification viewer. This shall allow a user or guard to decide the access of an individual who presents his/her card at a designated secure mode reader.
8. Database Partitioning: The Security Management System shall support dynamic partitioning. A Security Management System in which partitions are set up at installation and cannot be easily changed shall not be acceptable.
9. Status Groups: The Security Management System shall support a real-time system status monitor that graphically depicts all logical devices.
10. Keyboard Accelerators: The Security Management System shall allow the user to use a shortcut key to enable designated system commands.
11. Automatically Disable Card upon Lack of Use: The Security Management System shall allow system operators to set a predefined time period in which cardholders shall swipe their card through a card reader in the Security Management System.
12. User Functions and ADA Ability: The Security Management System shall provide user functions and ADA (Americans with Disabilities Act) ability that provides the capability to trigger an event at the Security Management System intelligent controller when a defined card is presented.
13. Pathways: The Security Management System shall support the capability of programming pathways. A pathway shall be an object that combines input points to be masked (shunted) for a set duration, and an output point to be activated, when a particular card receives a local grant at a reader.
14. Database Audit Log: The Security Management System shall be capable of creating an audit log in the history file following any change made to the Security Management System database by an operator.
15. Operator Log: The Security Management System shall be capable of creating an action log in the history file following actions performed by an operator.
16. Alarm Routing: The Security Management System shall be capable of defining routing groups that determine what event information shall be routed to a user or class of users.
17. Global and Nested Anti-passback: The Security Management System shall support the use of an optional anti-passback mode, in which cardholders are required to follow a proper in/out sequence within the assigned area.
18. Two Person Rule: The Security Management System shall support a "two person rule" to restrict access to specific access areas unless two cardholders present two different valid cards to the reader one after the other within a period time defined by the door unlock time multiplied by a factor of 2.
19. Occupancy Restrictions: The Security Management System shall allow the user to define the minimum and maximum occupancy allowed in a designated area.
20. Multiple Sequential Card Swipes to Initiate Procedure: The Security Management System shall allow the user to define a logical device, quantity of consecutive identical events, a time period and a Security Management System procedure to trigger when the event occurs a maximum quantity of times in the allocated time period.
21. Hardware Templates: The Security Management System shall include the ability to define hardware templates (door templates) in order to simplify the process of creating an access control system. Hardware templates shall allow a user to define a "typical" door configuration and then use that template over and over in the process of defining doors.

B. Access Control Functional Requirements: Functions shall include validation based on time of day, day of week, holiday scheduling, site code verification, automatic or manual retrieval of cardholder photographs, and access validation based on positive verification of card/PIN, card, and video. The following features shall be programmable and shall be capable of being modified by a user with the proper authorization:

1. Time Zones: Shall define the period during which a reader, card, alarm point, door, or other system feature is active or inactive. In addition to Monday-Sunday, there shall be at least one day of the week called Holiday.
2. Holidays: The application shall allow holidays to be entered into the Security Management System. Holidays shall have a start date plus duration defining multiple days. Holidays shall have a holiday type of 1, 2, or 3, which may be defined by the user.
3. Response Codes: The Security Management System shall allow the user to enter a predefined code to represent a response to an alarm occurring in the facility.
4. Clearance Codes: The Security Management System shall allow the user to establish groups of readers at a facility for the purpose of granting or denying access to badge holders. Clearance codes shall be assigned to companies and individuals employed by the company, and may be modified for individual users in the badge holder maintenance application.
5. Companies: Each badge holder entered into the Security Management System shall be assigned a company code identifying the individual's employer. The company information dialog box displays and maintains information related to companies having access to the facility.
6. Group Access: The Security Management System shall allow a user or group of users via company selection, a temporary denial of access to specific readers or areas based on a preconfigured event. The group access function shall limit access to a group of cardholders, overriding all other access criteria.
7. Event Types: Definitions shall be shipped with system software but shall be capable, upon installation, of being modified, added to, or deleted from the Security Management System.
8. Alarm Pages: Security Management System shall include the capability to create an unlimited number of customized alarm pages for the alarm monitor and each shall be assignable to users and user classes.
9. Event Types: Definitions shall be shipped with system software but shall be capable, upon installation, of being modified, added to, or deleted from the Security Management System.
10. Dynamic Graphical Maps: The Security Management System shall provide the user with the means to add maps and indicator icons to maps that shall represent input/output points, logical devices, or cameras located throughout the Security Management System. Security Management System maps shall display the state and condition of alarm points. The Security Management System shall also provide the ability to monitor the channels or panels.
11. Brass Keys: Shall maintain information related to assets that are issued in the facility, including brass keys, laptops, RSA keys, cell phones, company cards, etc.
12. ID Badging Client: The Security Management System Shall maintain information related to a badge holder's card access privileges. Upon entering this application, a window shall appear on the screen and all actions (add, modify, or delete) involving badges and cards shall be initiated from this window. Access privileges shall be linked to the cards used to gain access to doors in the facility. Modifications shall be made by adding or deleting clearance codes, or by door types assigned to the cards or to a badge holder.
13. ID Badging System: The Security Management System shall include seamlessly integrated ID badging system.
14. Users: Information related to the users of the Security Management System software shall be stored in the database. Users entered into the Security Management System shall be assigned the access privileges of the class to which they are assigned.
15. Elevator Control: The elevator control shall be of the Security Management System intelligent controller-based line of devices. The elevator control shall include the following functional features:
    a. Elevator call: Valid card read calls elevator to the floor. No reader in the elevator car.
    b. Floor control: Valid card read in the elevator car enables selectable floor buttons.
    c. Floor select: Valid card read in the elevator car enables selectable floor buttons and logs which floor is selected after the card is presented.
16. Data Transfer Unit (DTU): The DTU enables data to be imported from an external system directly into the Security Management System database and also exported from Pro-Watch to an external system.

a. Insert only: If a "data file key column #" shall be provided, the DTU will only insert a new badge record if the key column value is not found. An error shall be displayed in the log file if an existing badge record is found. If no "data file key column #" is provided, every record will be inserted into the Security Management System.
b. Updates only: The DTU shall use the "data file key column #" to look for the matching Security Management System record. An error shall be logged in the log file if the badge holder is not found in the Security Management System database.
c. Inserts, updates: The DTU shall use the "data file key column #" to look for the matching Security Management System record. If a matching record is not found, the DTU shall insert the data. If a matching record is found, the record shall be updated.

17. Generic Channel Interface: The Security Management System shall provide the ability to define generic communications channels over serial port or TCP/IP network socket including IP address and port/socket, to support custom integration of external foreign devices. The Security Management System shall generate events based on data received from the channel matching operator pre-defined instructions.

C. Application Localization: The Security Management System shall support at least seven languages including English. The languages available shall include German, French, Spanish, Italian, Chinese (simplified), Portuguese (Brazil), Norwegian, Chinese (Traditional), Danish, and Dutch, All database resources will be localized, and will include a standard U.S. English help file.

D. Event Manager: The Security Management System shall utilize an event manager as a component of system administration and offer the ability to have users control the amount of data stored as well as a quick snapshot of the logged data in the system. Using the various logs in event manager, the user will be able to gather information about events, auditing, and operator actions. The logs are defined as follows: Event log, audit log, unacknowledged alarms.

2.4 INTELLIGENT CONTROLLERS - HARDWARE REQUIREMENTS:

A. Distributed architecture shall allow controllers to operate independently of the host. The architecture shall place key access decisions, event/action processing and alarm monitoring functions within the controllers, eliminating degraded mode operation.

B. Flash memory management shall support firmware updates and revisions to be downloaded to the system. Upgrades to the hardware and software shall occur seamlessly without the loss of database, configurations, or historical report data.

C. Manufacturers: Subject to compliance with requirements, provide Field Controllers or comparable product by one of the following:

1. Honeywell Security PW-6000
2. Honeywell Security PW-6101ICE
3. Honeywell Security Star II(Legacy)
4. Honeywell Security PW-2000(Legacy)
5. Honeywell Security PW-3000
6. Honeywell Security PW-5000

2.5 FIELD HARDWARE:

A. The security management system shall be equipped with access control field hardware required to receive alarms and administer all access granted/denied decisions. All field hardware shall meet UL requirements.

1. Intelligent Controller Board:
   a. PW3K1IC (Legacy Only).
   b. PW6K1IC.
   c. PW6K1ICE.
2. Single Reader Module (SRM):
   a. PW6K1R1.
   b. PW6K1R1E.
3. Dual Reader Module (DRM):
   a. PW6K1R2.
4. Alarm Input Module (AIM):

a. PW6K1IN.
5. Relay Output Module (ROM):
   a. PW6K1OUT.
6. Mercury Family Hardware:
   a. EP-1501.
   b. EP-2500 with Wiegand Reader.
   c. MR-16IN (16 Input Board).
   d. MR-16OUT (16 Output Board).
   e. MR-50 (Single Reader Board).
   f. MR-51E (Single Reader Board ETHERNET).
   g. MR-52 (2-Reader Board).
   h. SCP/SCP2.
   i. SCPC.
   j. Mercury M5 Bridge.
7. Card Readers:
   a. HID:
      1) iCLASS R10 (wall mount) & R40 (mullion mount)

2.6 SOFTWARE DEVELOPMENT KIT (SDK)

A. Security Management System shall permit custom integration with other third party systems through an SDK. SDK shall support the OBIX communication protocol and interface directly with the Niagara Framework for support of additional communications protocols.

B. Manufacturer and part numbers:
   1. Honeywell Security HSDK.

2.7 WEB CLIENT:

A. Web Alarms.

B. Web Events.

2.8 SUPPORTED WEB BROWSERS:

A. (Windows) Internet Explorer latest version.

B. (Windows) Google Chrome latest version.

C. (Windows) Firefox latest version.

2.9 INTEGRATED SECURITY MANAGEMENT SYSTEM

A. Product: WIN-PAK Access System as manufactured by the Honeywell Security Group.

B. The Integrated Security Management System (ISMS) shall function as an electronic access control system and shall integrate the alarm monitoring, CCTV, digital and network video, ID badging and database management into a single platform. ISMS shall function as a one-stop gateway for all the access control needs. A modular and network-enabled architecture shall allow maximum versatility for tailoring secure and dependable access and alarm monitoring solutions. The ISMS shall offer a security management software suite that includes all the features bundled in the following three editions:

C. Professional Edition (PE): Shall include all the features of Standard Edition plus the following additional features: Unrestricted concurrent users, multiple communication servers, 255 IP connections per communication server, 100,000 card holders and PRO3200, PRO2200, NetAXS-123, NetAXS-4, N1000/PW2000, NS2 and NS2+ panel support.

2.10 ISMS COMPONENTS:

A. The ISMS shall be divided into three components: Database Server, Communication Server, and User Interface. These components shall run on a single computer or on multiple computers, allowing flexibility in configuring a networked system.

1. Database Server: The database server is used for storing the database tables. This data is accessible to communication server and user interface for retrieving and generating the reports. The database server shall be installed on the client computer or any other computer connected to the network.
2. Communication Server: The communication server routes user interface requests as well as the access transactions to the panel. The panel in-turn processes the transactions and sends the information to the database server as well as responses to the user interface through the communication server. When the communication server is sending information to the database server, it can also receive a request from the user interface. In this scenario, the communication server considers the user request as a higher priority and stops the panel-database server communication until the user request is processed. The communication server shall be installed on the client computer or any other computer connected to the network.
3. User Interface (ISMS Client): The user interface helps ISMS operators to communicate with the access control system. The user interface shall be installed on the computer where the database server or the communication server is installed or any other computer connected to the network. Several client computers can be run simultaneously and can access the single database server simultaneously. The number of client computers varies based on the licensing information of ISMS.

B. The ISMS includes the Command File Server: A command file server provides text files containing device instructions that shall be stored in the command files database. The commands in the command files can be sent to the devices automatically on receiving, acknowledging, or clearing an alarm. Also, the command files can be manually executed.
   1. Guard Tour server: A guard tour is a defined series of check points a guard must activate within a given amount of time. The check points are readers or input points where the guard presents the card or presses the button.
   2. Tracking and Muster Server: A muster server is enabled in the event of an emergency and allows the card holders to swipe the readers. Muster areas are logical areas that contain readers to be used by the card holders, only if there is a call for muster (in the event of a disaster, for example).
   3. Schedule Server: A schedule server schedules the list of events to be performed at a predetermined time and intervals such as hourly, daily, or monthly.
   4. Video Management Server: A video management server provides interface to connect to various DVR's/NVR's. In addition, it also provides CCTV control with live monitor display, PTZ control of cameras and video playback operations.

2.11 INTEGRATED SECURITY MANAGEMENT SYSTEM OPERATIONAL REQUIREMENTS:

A. The ISMS shall be a modular and network-enabled access control system capable of controlling multiple remote sites, alarm monitoring, video imaging, ID badging, paging, digital video and CCTV switching and control that allows for easy expansion or modification of inputs and remote control stations. The ISMS control at a central computer location shall be under the control of a single software program and shall provide full integration of all components. It shall be alterable at any time depending upon facility requirements. The ISMS reconfiguration shall be accomplished online through system programming.

B. The ISMS application shall have the major functional capabilities (considered essential for the system) categorized as follows:
   1. General:
      a. All the databases shall have the ability to add, delete, report, view, and edit information.
      b. All the system transactions shall be saved in a retrievable file.
      c. All the events shall be logged by date and time.
      d. All the system transactions or selected system transactions shall be saved in a disk file.
      e. The end-user shall have the provision to make any system configuration changes such as, but not limited to door open time, door contact shunt time, point and reader names, when and where a cardholder is valid, and the ability to add or modify card databases at any time.

f. Shall support "Global Anti-pass back", feature allowing cardholder to enter/exit any such defined card reader on the same intelligent control panel or RS-485 drop-line consisting of 2 and 4 door controllers.
g. Anti-pass back modes shall include: hard (no forgiveness), soft (allows access but generates an alarm event) and timed for all readers on the intelligent controller, on specified reader or card for a definable period of time up to 32,000 seconds.
h. Shall support the "Duress" feature, where a PIN is used in conjunction with a card read; the numbers of digits are selected using the keypad where the PIN number is a value different from the normal PIN.
i. Shall support the "Two card holder" rule, where two valid, non-identical "cards" must be used within a 20 second period to grant access.
j. Shall have the option to display the time when a card holder using a reader has accessed (opened) the door or the card was used, but the door was not opened.
k. Shall support the "Latch mode" operation where the first card read unlocks the door and the second card read locks it.
l. Shall provide a mode of system operation that stores system commands not accepted by the hardware.
m. Shall provide a mode of system operation that requires the operator to enter a response to an event when acknowledging it from the alarm view window.
n. Shall provide a mode of system operation that allows acknowledged alarms to be automatically cleared.
o. Shall provide a mode of system operation where when an acknowledged, but not cleared event will be reissued requiring acknowledgement when the event changes to an alarm or trouble state.
p. Shall provide a mode of system operation that does not allow the operator to clear an alarm before prior to it being restored to normal.
q. Shall provide the ability for manual operator control of system output relays. The manual functions shall include the ability to energize, de-energize, return to time zone, or pulse the output relay. The pulse time shall be a programmable setting.
r. Shall provide the ability for manual operator control of system doors. The manual functions shall include the ability to Lock, Un-Lock, Disable, Card only, Card-Pin only, Pin only, exit only and site code only.
s. Shall provide the ability to automatically display stored "video image" of cardholder, and switch real-time camera from CCTV or digital video server to card reader location for specific card usage.
t. The cardholder "video image" pop-up shall be activated based on a priority level set to the cardholder or reader. Information in the pop-up shall include, but not be limited to the card holder's primary image a live video pop-up showing the person who initiated the pop-up, entrance name, time, date, cardholder name, and status. User shall be able to display up to 40 note fields. The size of the pop-ups shall be adjustable by the operator.
u. Shall support multiple card reader technology including: Proximity, Wiegand effect, Biometrics, Magnetic stripe, Bar Code, Keypad, Card/keypad (PIN), High-speed long range Vehicle ID, and Smart Card.
v. Shall provide an option for taking scheduled automatic backups of any or all database system files. A means to restore these files from a simple menu shall exist.
w. Shall provide the ability to address up to 255 serial communication ports per communication server, where each port can be configured for either hardwired, or dial-up. When configured for dial-up, any one port can support multiple dial-up locations.
x. Communication from the access control communication server to the remote intelligent control panels shall be selectable. Communication options shall be RS-232 directly to the intelligent control, via RS-485 converter, dial-up, leased line from a defined communication port or by LAN/WAN using an IP address for direct connection to the intelligent controller via network interface card. When using IP addressing it shall be un-acceptable to use a communication port converter device on the communication server side of the transmission. A minimum of 255 such IP connections shall be allowed per communication server.
y. All commands and updates to the panels shall be verified and shall automatically retry if communications fail.

z. Shall provide a system scheduler that shall automatically: Call remote locations to retrieve history transactions and update panel information, including time and date, Activate or deactivate cards locally or at remote dial-up sites, Initiate a pre-programmed command event/action, Synchronize system to intelligent controller time, Run a pre-defined (template) History report, Run a pre-defined (template) Card Holder report, Card frequency report defined by reader(s), over a defined period of time with disposition options to automatically report or report and de-activate card or change the access level of the card, Frequency shall be defined as Never, Now, Once, Hourly, Daily, and Weekly, Once per 2 weeks, and Monthly.

aa. Shall provide drop boxes for all system-required information that the user has previously entered.

bb. Shall provide the ability to initiate an email (via SMTP) or page to a paging system based on a transaction state. A transaction state shall be defined as but not limited to Normal, Alarm, Trouble, Ajar, Trace, Not Found, Anti-Pass back Violation, PIN Violation, Time Zone Violation, Site Code Violation, Door Used, Duress, No Second Card Presented, Trace Card or Expired Card, and System Alarms including, Panel Com, Panel Power Failure, Modem Pool, Guard Tour, and Tamper. Intrusion partition events including but not limited to: Alarm, Alarm Cancel, Aram Away, Arm Stay, Auto Arm, Auto Disarm, Bypass, Disarm, Early Arm, Early Disarm, Fail to Arm, Fail to Disarm, Normal, Not Ready, Part Arm, Quick Arm, Recent Close, Remote Arm, Remote Disarm, Unbypass, User Code Added, User Code Deleted, user Code Edited. Intrusion zone events including but not limited to: Alarm, Alarm Restore, Bypass, Fault, Fault Restore, Normal, Trouble, Trouble Restore, and Unbypass. Intrusion output events including but not limited to: Alarm, Communication Loss, Normal, Tamper, and Tamper Restore. Intrusion panel events including but not limited to: Access Denied, Automatic Test, Comm Fail, Comm Restore, Faults, Faults Restore, Line Restore, Line Trouble, Manual Test, Pager Restore, Pager Trouble, AC Restore, AC Trouble, Alarm, Battery Low, Battery Low Restore, Disarm, Normal, Recent Close, Reset, Panic Alarm, Power Up, Program begin, Program Changed, Program End, System Shutdown, System Shutdown Restore, Tamper Alarm, Tamper Restore, Test End, Test Start, Time/Date changed.

cc. Shall include a "host grant" mode of operation that requires the host computer to grant accesses to "valid" cards. An alternate host grant mode shall allow the card access information to be downloaded along with unlocking the door for "valid" cards.

2. Cards: Shall provide a simple card and card holder database import utility. The utility shall be password protected and accessible only to administrators of the access control system. Information that can be imported shall include but not be limited to: First Name, Last Name, Card Number, Activation Date, De-activation Date, Status, up to 40 note fields and Photo Images. A simple CSV (comma separated value) file shall be used for the importing of data and image file names.
3. Access Levels: Shall provide an option to define specific access times and specific readers for access. Shall provide a template of a defined access level detail, where changes can be made to the template and saved as a new access level detail.
4. Access Control Panels: Shall provide ability to program Action Messages and assign an alarm event priority. .
5. Reports: Shall provide Card holder report capability with filter options to define door(s) that a card holder has access to, reporting card holder name, Card(s), Access Level/schedules, Activation/Expiration.
6. Tracking/Muster Report: A tracking feature shall allow the system operator to identify an area and the person(s) in that area.
7. Time Zones: Time zone definitions shall include Starting time, Ending time, Days of the week, and Holiday override.
8. Floor Plan Graphic: Shall provide the ability to import floor plan graphics stored in a WMF format.
9. Remote Locations: Shall provide the ability to place remote control panels in an offline mode. In the offline mode, the remote control panels shall retain all panel history events. The amount of historical events shall be limited to the panels' buffer capacity.
10. Guard Tour: Guard Tour shall allow the operator to program a series of guard check points that must be activated to accomplish the task of a Guard Tour.

11. ID Badging System/Video Image System: Shall allow any card data fields to be assigned to a badge.
12. Networking: Shall provide networking capabilities (LAN or WAN) as allowed by the computer's operating system license.

2.12 ISMS HARDWARE AND SOFTWARE REQUIREMENTS:

A. The ISMS shall be installed in a computer that supports 1 to 10 readers, 250 cards, and 2 communication ports. The minimum hardware and software requirements to fulfill this installation are:
   1. Processor: Dual Core Intel(R).
   2. CPU: 2.4 GHz.
   3. RAM: 2 Gigabytes (GB).
   4. Hard Disk: 80 GB SATA with minimum 5 GB free space.
   5. Serial Communication Ports: 2.
   6. Secondary Storage: Tape or DVD burner.
   7. Printer port: 1 (2 if badging).
   8. Monitor Display: Size: 15 Inches SVGA, Resolution: 1024 x 768, Colors: 256.
   9. Pointing Device: Mouse (USB preferred).
   10. Operating System: Microsoft Windows 7 SP1.
   11. Database: Microsoft SQL Server 2012 Express Edition.

B. The ISMS shall be installed in a computer that supports 1 to 100 readers, 5,000 cards, and 8 communication ports. The recommended hardware requirements to fulfill this installation are:
   1. Processor: Quad Core Intel Xeon®.
   2. CPU: 2.4 GHz.
   3. RAM: 4 Gigabytes (GB).
   4. Hard Disk: 250 GB SATA or SCSI.
   5. Serial Communication Ports: 2.
   6. Secondary Storage: Tape or DVD burner.
   7. Printer port: 1 (2 if badging).
   8. Monitor Display: Size: 17 Inches SVGA, Resolution: 1024 x 768, Colors: True color.
   9. Pointing Device: Mouse (USB preferred).
   10. Operating System: Microsoft Windows 7 SP1.
   11. Database: Microsoft SQL Server2012 Express Edition.

C. The ISMS shall be installed in a computer that supports that supports more than 100 readers, 100,000 cards and 255 communication ports, The maximum/performance hardware requirements to fulfill this installation are:
   1. Processor: Intel(R) Quad Core E5504 Xeon.
   2. CPU: 2.4 GHz.
   3. RAM: 8 Gigabytes (GB).
   4. Hard Disk: Minimum 500 GB SATA 7200 RPM, recommended 15kRPM.
   5. Serial Communication Ports: As per the requirement.
   6. Secondary Storage: Tape or DVD burner.
   7. Monitor Display: Size: 19 Inches SVGA, Resolution: 1280 x 1024, Colors: True color.
   8. Pointing Device: Mouse (USB preferred).
   9. Operating System: Microsoft Windows Server 2012 R2.
   10. Database: Microsoft SQL Server2012 with processor/core license.

2.13 HARDWARE REQUIREMENTS:

A. Intelligent Controllers:
   1. Distributed architecture shall allow controllers to operate independently of the host. The architecture shall place key access decisions, event/action processing, and alarm monitoring functions within the controllers, eliminating degraded mode operation.
   2. Flash memory management shall support firmware updates and revisions to be downloaded to the system. Upgrades to the hardware and software shall occur seamlessly without the loss of database, configurations, or historical report data.

3. Manufacturers: Subject to compliance with requirements, provide Field Controllers or comparable product by one of the following:
    a. Honeywell NetAXS Controller (NetAXS-123 and NetAXS-4 are the two types of NetAXS controllers).
    b. Honeywell P-Series Controller (PRO-2200 (Legacy), PRO-3200 are the types of P-Series controllers).
    c. Intelligent Controller Board: Honeywell Security PRO32IC
    d. Honeywell N-1000 or PW-2000 Controller (Legacy only).
    e. Honeywell Security NS2 or NS2+ (Legacy only).

B. Field Hardware:

1. The security management system shall be equipped with access control field hardware required to receive alarms and administer all access granted/denied decisions. All field hardware shall meet UL requirements.
2. Intelligent Controller Board: Honeywell Security PRO32IC
3. Single Reader Module (SRM): Honeywell Security PRO22R1
4. Dual Reader Module (DRM): Honeywell Security PRO32R2
5. Alarm Input Module (AIM): Honeywell Security PRO32IN. 16 Inputs 2 Outputs.
6. Relay Output Module (ROM): Honeywell Security PRO32OUT. 16 Outputs 2 Inputs.
7. NetAXS-4 Access System as manufactured by the Honeywell Security Group
    a. NX4S1: 4 Door Control Panel (Standard Enclosure)
    b. NX4L1: Pre-wired 4 Door Control Panel (Deluxe Enclosure)
8. NetAXS-123 Access System as manufactured by the Honeywell Security Group
    a. NX1P: One-door compact (plastic) enclosure with tamper switch
    b. NX1MPS: One-door standard (metal) enclosure with tamper switch, power supply, and battery
    c. NXD1: One-door add-on board (to NX1P or NX1MPS) for two-door capacity
    d. NXD2: Two-door add-on board (to NX1P or NX1MPS) for three-door capacity
9. Card Readers:
    a. SmartCard
    b. Proximity.
    c. Magnetic Stripe.
    d. Wiegand.
    e. Barcode.

2.14 CONTACTLESS SMART CARDS

A. Multiple Technology Access Card:

1. The card shall support 13.56 MHz iClass contactless smart chip and antenna plus any or all of the following technologies, simultaneously:
    a. 125 kHz HID Proximity chip and antenna.
    b. Magnetic Stripe.
    c. Embedded Contact Smart Chip Module.
2. The card shall be available with a 13.56 MHz iClass contactless smart chip and antenna plus a Wiegand Strip with an optional magnetic stripe, meeting all ISO 7810 standards except for card thickness, which shall be 0.037 inch (0.939 mm). The card will not be available with 125 kHz proximity technology and/or an embedded contact smart chip module.
3. Manufacturer: HID iClass

2.15 BLUE LIGHT STROBE

A. Blue Light Strobe:

1. Contractor shall field verify and coordinate all mounting locations with Architect, Architectural plans, and elevations.
2. Blue light strobes shall provide visual signal during “Lockdown” operation. See Part 2.16-A.3.a for Lockdown Order of Operations.
3. Strobe shall be an LED strobe providing efficient light for visibility in direct sunlight, providing a minimum of 270 lumens (92 Candela).
4. Strobe shall be indoor/outdoor rated.

5. Operating temperature shall be -40 degrees F to +158 degrees F.
6. Flash Rate shall be up to 375 per minute.
7. Strobe shall be UL 2017 compliant as part of enclosure, IP56 rated, and NEMA 4 rated.
8. Provide and install all necessary accessories, backboxes, and mounting brackets for the installation.
9. Strobe shall fully integrate with the access control system.
10. Manufacturer: Code Blue S-1000 LED Beacon/Strobe

2.16 EMERGENCY BUTTON

A. Emergency Button:
   1. Contractor shall field verify and coordinate all mounting locations with Architect, Architectural plans, and elevations.
   2. Emergency button shall be a round button with a clear cover and shall say “Emergency Use Only” over the button.
   3. Emergency buttons shall be use to activate “Lockdown” operations within the building.
      a. Lockdown Order of Operations:
         1) Individual inside building presses an emergency button to lockdown current room
         2) Access control system lockdowns current and all rooms while notification goes to dispatch building which is to be determined. Response is dispatched as needed.
         3) Blue light strobe outside building flashed as a warning signal.
         4) Rooms when in lockdown mode are assessed one by one. They can be entered by presenting an authorized badge at the card reader.
      b. Verify all operational requirements with owner prior to installation and programming.
      c. Contractor to program all associated groups and access levels for access control system, including the override badge for the card readers, for rooms to be accessed during lockdown mode.
   4. Emergency button cover shall be supervised and issue access control system alarm when it is opened, with a second alarm when it is pressed.
   5. Emergency button shall give audible alarm when cover is opened.
   6. Manufacturer: HID Safety Technology International SS23A4ZA-EN with custom label: “Emergency Use Only”

PART 3 EXECUTION

3.1 ACCEPTABLE INSTALLERS

A. The system shall only be provided by Contractors who are factory authorized to install, service and maintain the system by the access control manufacturer.

B. The Contractor must have been a factory authorized dealer with the proposed manufacturer for a period of at least two (2) years before the Bid Opening Date.

C. The Contractor’s installers and technicians must also be factory trained and certified to perform such tasks.

3.2 EXAMINATION

A. The Contractor shall be required to visit the installation site prior to bidding the job.

B. The Contractor shall report any discrepancies between the Specifications, Drawings, and Site Examination prior to the Bid Opening Date.

3.3 PREPARATION

A. The Contractor shall order all required parts and equipment upon notification of award of the Work.

B. The Contractor shall bench test all equipment prior to delivery to the job site.

C. The Contractor shall verify the availability of power where required. If a new source of power is required, a licensed electrician shall be used to install it.

D. The Contractor shall arrange for obtaining all programming information including access times, free access times, door groups, operator levels, etc.

3.4 INSTALLATION

A. The Contractor shall coordinate with the SAC's IT Department if connecting to their network.

B. The Contractor shall carefully follow the instructions in the manufacturers' Installation Manual to insure all steps have been taken to provide a reliable, easy to operate system.

C. The Administrator Terminal shall be connected to the remote terminals before connecting to any card reader processors.

D. The Contractor shall coordinate with the SAC's locksmith if converting from mechanical to electric locks.

E. Perform all Work as indicated in the Drawings and Specifications.

F. The Contractor shall install the appropriate cable from the CPU to readers, door contacts, request-to-exit devices, and electric locks at each door and/or gate.

G. All communications cables shall be kept away from power circuits.

H. The Contractor shall install the power supply(s) for electric locks in locations where they won't interfere with other operations.

I. The Contractor shall also execute adequate testing of the system to insure proper operation.

J. The Contractor shall provide adequate training of the system users to insure adequate understanding to prevent operating errors.

3.5 WORKMANSHIP

A. Comply with highest industry standards, except when specified requirements indicate more rigid standards or more precise workmanship.

B. Perform Work with persons experienced and qualified to produce workmanship specified.

C. Maintain quality control over suppliers and Subcontractors.

D. Quality of workmanship is considered important. SAC Project Manager will have the authority to reject Work which does not conform to the Drawings and Specifications.

3.6 EQUIPMENT PRE-TEST

A. All equipment shall be bench tested prior to delivery to job site and prior to installation. Bench test per manufacturer's installation instructions.

3.7 WIRE AND CABLE

A. Design, layout, size, and plan new wire and cable runs as required.

B. All wire and cable from the processors to all devices at each door shall be "home-run" unless otherwise specified.

C. All wire and cable, including any wire and cable that is existing and will be reused in the Work, shall be installed in conduit or surface metal raceway, except as follows:

D. Wire or cable, in lengths of less than ten (10) feet, that is "fished" within walls, ceilings, and door frames.

E. All wire and cable passing thru metalwork shall be sleeved by an approved grommet or bushing.

F. Avoid splicing conductors. All splices shall be made in junction boxes (except at equipment). Splices shall be made with an approved crimp connection. Wire nuts shall not be used on any low-voltage wiring.

G. Identify all wire and cable at terminations and at every junction box. Identification shall be made with an approved permanent label, Brady or equal.

3.8 WIRE AND CABLE TERMINATIONS

A. Identify all inputs and outputs on terminal strips with permanent marking labels.

B. Neatly dress and tie all wiring. The length of conductors within enclosures shall be sufficient to neatly train the conductor to the terminal point with no excess. Run all wire and cable parallel or normal to walls, floors and ground.

C. Install connectors as required by equipment manufacturers.

D. Terminations shall be made so that there is no bare conductor at the terminal. The conductor insulation shall bear against the terminal or connector shoulder.

E. Do not obstruct equipment controls or indicators with wire or cable. Route wire and cable away from heat producing components such as resistors, regulators, and the like.

3.9 CONDUIT AND RACEWAY INSTALLATION

A. Design, lay-out, size and plan new conduit and raceway systems as required.

B. Indoor Requirements:

1. Route exposed conduit and raceway parallel and perpendicular to walls and adjacent piping.
2. Maintain minimum six (6) inch clearance between conduit and piping.
3. Group conduit in parallel runs where practical and use conduit rack constructed of steel channel with conduit straps or clamps.
4. Use conduit bodies to make sharp changes in direction, as around beams. Fasten conduits and raceways to structural steel using approved spring clips or clamps.
5. Where conduit penetrates fire-rated walls and floors, seal opening with UL listed fire rated sealer or other methods as approved by codes.
6. No exposed conduit, raceway, or junction box shall be installed within any office area.
7. Install all boxes straight and plumb.
8. Do not support conduit from mechanical, plumbing, or fire sprinkler systems.
9. Drill or core drill all holes in walls, ceilings, or floors where required for new conduits. Do not cause damage to any structural steel or other structural support member by drilling or cutting.
10. Do not use flexible conduit in lengths longer than six (6) feet.

C. Outdoor Requirements:

1. Where conduit penetrates exterior walls, seal opening around conduit in an approved manner to make watertight.
2. Use galvanized straps and fasteners on all exterior conduit.
3. All exterior boxes will only be used to aid in pulling the cable between points.

3.10 PENETRATIONS

A. Do not penetrate any roof, flashing, exterior wall, or parapet without prior approval from **SAC**'s designated Construction Project representative.

B. When penetrating a fire wall for passage of cables and/or conduit, always provide a fire-stop system that complies with code and the local authority having jurisdiction.

3.11 FIRE RATED DOORS AND FRAMES

A. Do nothing to modify a UL. rated door or frame that would void the UL. Label or fire rating.

3.12 GROUNDING

A. Provide earth-grounding of equipment as required by equipment manufacturer. Earth ground shall be connected to ground rod or approved cold water pipe. Electrical or telephone ground connections shall not be used as earth grounds. Connections to mounting posts or building structural steel shall not be used as earth grounds.

3.13 POWER TO SECURITY EQUIPMENT

A. Power all equipment from 120 VAC circuit dedicated for security use, except as noted. Mark all panel circuit breakers with labels worded “Security Equipment - Do Not Operate”, or equivalent.

B. All plug-in transformers shall be located at the security control panels. Secure all low-voltage plug-in transformers to outlet with screw or strap. Clearly label all transformers to identify purpose and use.

3.14 CUTTING AND PATCHING

A. The Contractor shall be responsible for all cutting, fitting or patching that may be required to complete the Work.

3.15 PAINTING

A. All surface raceway systems shall be painted to match the surfaces they are attached to. All surfaces damaged by the installation shall be repaired and painted by The Contractor.

3.16 PLYWOOD BACKING

A. Install the processor(s), power supplies, and all other related equipment on a plywood backboard for testing in the shop. The mounted assembly will then be transported “as is” to the job site for mounting in the Communication Room.

B. Fasten the plywood backing to the wall using a hanger bolt at the four corners which align with pre-drilled holes in the plywood. Secure with flat washers and a nut.

3.17 FIELD QUALITY CONTROL

A. Upon reaching Substantial Completion, perform a complete test and inspection of the system. If found to be installed and operating properly, notify SAC of your readiness to perform the formal Test & Inspection of the complete system.

B. Submit the Record Drawings (as-builts) to SAC for review prior to inspection.

C. During the formal Test & Inspection (Commissioning) of the system, have personnel available with tools and equipment to remove devices from their mounts to inspect wiring connections. Provide wiring diagrams and labeling charts to properly identify all wiring.

D. If corrections are needed, the Contractor will be provided with a Punch-List of all discrepancies. Perform the needed corrections in a timely fashion.

E. Notify SAC when ready to perform a re-inspection of the installation.

3.18 INITIAL PROGRAMMING AND CONFIGURATION

A. Contractor shall provide initial programming and configuration of the security management system. Programming shall include defining hardware, doors, monitor points, clearance codes, time codes, door groups, alarm groups, operating sequences, camera call-ups, and the like. Input of all program data shall be by Contractor. Contractor shall consult with Security Consultant and Owner to determine operating parameters.

B. Contractor shall develop and input system graphics, such as maps and standby screens. Owner shall provide floor plan drawings as the basis for the creation of maps. Development of maps shall include the creation of icons for all doors, monitor points, and tamper circuits. Owner shall provide floor plan drawings, in the form of AutoCAD .DWG or .DXF files, as the basis for the creation of maps.

C. Owner, with the cooperation and assistance of Contractor, will input the cardholder data for each access card.

D. Contractor shall maintain hard copy worksheets which fully document the system program and configuration. Worksheets shall be kept up to date on a daily basis by Contractor until final Acceptance by Owner. Worksheets shall be subject to inspection and approval by Owner. Provide final copies to Owner prior to Project Close-out.

E. Contractor shall maintain a complete, up-to-date magnetic tape backup of the system configuration and cardholder database. Backup shall be maintained throughout programming period until final Acceptance by Owner. Submit back-up tapes to Owner upon Final Acceptance.

F. Approximately sixty (60) days after start-up of system, Contractor shall return to project to provide follow-up assistance with system configuration as requested by Owner. Contractor shall include an allowance of forty (40) hours of labor for follow-up assistance in his Base Bid price.

3.19 TRAINING

A. Contractor shall provide complete operator training on the Security Management System. Training shall consist of thirty-two hours of classroom instruction for ten people selected by Owner, plus two (2) hours of individual hands-on training for each of ten people selected by Owner. Hands-on training shall include the opportunity for each person to operate the system, and to practice each operation that an operator would be expected to perform.

B. Training shall cover all operating features of the system, including the following:

1. System set-up and cardholder database configuration.
2. Access control features.
3. Alarm monitoring features.
4. Report generation and searches.
5. Card management and Badge Design/Printing
6. Disk backup procedures
7. Routine maintenance and adjustment procedures.

C. Training sessions are to be held at Owner's facility, and are to be scheduled at the convenience of Owner. Contractor shall provide written training outline and agenda for each training session prior to scheduling.

D. Weekly format of training sessions shall be as follows:

1. Monday: Afternoon Session: Control Center Training
2. Tuesday: All Day: System Administrator Training
3. Wednesday: All Day: System Administrator Training
4. Thursday: All Day: System Administrator Training
5. Friday: Morning Session: Control Center Training

E. Contractor shall provide written training materials for each of ten (10) people.

3.20 OPERATOR TRAINING

A. Contractor shall provide complete operator training on the Security Management System. Two types of operator training shall be provided:

1. System Administrator Training: Three-day comprehensive training course for system managers and maintenance personnel. Provide two (2) separate on-site training sessions.

B. Training sessions shall include the opportunity for each person to operate the system, and to practice each operation that an operator would be expected to perform.

C. Contractor shall provide written training materials for each of ten (10) people at each training session.

D. Training sessions are to be held at Owner's facility, and are to be scheduled at the convenience of Owner. Some training sessions may be required to be held during evening hours and on weekends to accommodate users whose schedule does not permit attendance during regular hours.

E. Contractor shall provide written training outline and agenda for each training session prior to scheduling.

3.21 MANUFACTURER PROFESSIONAL SERVICES

A. Contractor shall coordinate with the manufacturer to provide the manufacturer's professional services team to assist the Owner in coordinating the interfaces between the security management system and other on-site systems as necessary.

B. Professional Services personnel shall be employed by the manufacturer of the security management system and shall be thoroughly knowledgeable of the security management system applications.

C. Professional Services personnel shall be on-site and available to meet with Owner's representatives for a period of not less than two consecutive days. On-site visit shall be scheduled at the convenience of the Owner.

END OF SECTION

SECTION 312000
EARTH MOVING

Revised, Addendum #2, 09/01/17

PART 1 GENERAL

1.1 SUMMARY

A. This Section includes the following:
   1. Preparing subgrades for slabs-on-grade, walks, pavements, lawns and grasses and exterior plants.
   2. Excavating and backfilling for buildings and structures.
   3. Drainage course for slabs-on-grade.
   4. Base course for concrete, walks and pavements.
   5. Base course for asphalt paving.
   6. Excavating and backfilling for utility trenches.

1.2 QUALITY ASSURANCE

A. Standard Specifications: Comply with the Standard Specifications for Public Works Construction (SSPWC), latest edition and supplements for rock materials. The Standard Specifications apply only to performance and materials and how they are to be incorporated into the Work. The legal/contractual relationship sections and the measurement and payment sections do not apply to this document.

1.3 REFERENCES

A. This specification section has been prepared using the project soils report by Terracon Consultants dated June 27, 2016 as a reference.

1.4 DEFINITIONS

A. Backfill: Soil material used to fill an excavation.
   1. Initial Backfill: Backfill placed beside and over pipe in a trench, including haunches to support sides of pipe.
   2. Final Backfill: Backfill placed over initial backfill to fill a trench.

B. Base Course: Course placed between the subgrade and hot-mix asphalt or concrete paving.

C. Bedding Course: Course placed over the excavated subgrade in a trench before laying pipe.

D. Borrow Soil: Satisfactory soil imported from off-site for use as fill or backfill.

E. Classified Excavation: Removal and disposal of materials not defined as rock

F. Drainage Course: Course supporting the slab-on-grade that also minimizes upward capillary flow of pore water.

G. Excavation: Removal of material encountered above subgrade elevations and to lines and dimensions indicated.
   1. Authorized Additional Excavation: Excavation below subgrade elevations or beyond indicated lines and dimensions as directed by Architect. Authorized additional excavation and replacement material will be paid for according to Contract provisions changes in the Work.
   2. Unauthorized Excavation: Excavation below subgrade elevations or beyond indicated lines and dimensions without direction by Architect. Unauthorized excavation, as well as remedial work directed by Architect, shall be without additional compensation.

H. Fill: Soil materials used to raise existing grades.

I. Structures: Buildings, footings, foundations, retaining walls, slabs, tanks, curbs, mechanical and electrical appurtenances, or other man-made stationary features constructed above or below the ground surface.

J. Subgrade: Surface or elevation remaining after completing excavation, or top surface of a fill or backfill immediately below base, drainage fill, or topsoil materials.

K. Unclassified Excavation: Removal and disposal of materials encountered regardless of nature of materials, including rock.

L. Utilities: On-site underground pipes, conduits, ducts, and cables, as well as underground services within buildings.

1.5 PROJECT CONDITIONS

A. Examine site, Drawings, records of existing utilities and construction, record of test borings, and subsurface exploration report available from Owner. Records of test borings are for information only and are not guaranteed to represent all conditions that will be encountered.

1.6 PROTECTION

A. Soils Consultant: A geotechnical consultant shall advise on Construction techniques involved in work, including design, checking and approving of temporary bracing, sheeting, shoring, underpinning and other items pertinent to work, and encountered during prosecution of work. Consultant shall be primarily concerned with construction methods, which will prevent settlement or damage to surrounding structures, sidewalks, embankments, utilities and roads on Owner's property and adjoining properties.

B. Existing Utilities:

1. Maintain existing utilities that are to remain in service. Before excavating over or adjacent to existing utilities, notify utility Owner to ensure protective work will be coordinated and performed in accordance with utility Owner's requirements. If existing service lines, utilities and utility structures, which are to remain in service, are uncovered or encountered during these operations, safeguard and protect from damage.
2. Within limits of excavation, remove existing piping, subsoil drainage systems, conduit, manholes and relocated items, which are to be abandoned. Plug open ends of utilities to remain with concrete.
3. Re-route existing subsoil drains which obstruct work around new constructions, or incorporate them into new drainage systems.
4. Consult Architect immediately for directions, should uncharted or incorrectly charted piping or other utilities be encountered during excavation. Cooperate with Owner and public and private utility companies in keeping their respective services, utilities and facilities in operation. If damaged, repair utilities to satisfaction of Architect and utility Owner.

C. Existing Facilities: Protect and maintain in satisfactory manner, existing pavements, curbs, gutters, structures, conduits, fences, walls and other facilities to remain above and below grade. Restore facilities damaged by construction operations.

D. Pumping and Draining: Excavate areas in such manner as to afford adequate drainage. Control grading in vicinity of excavated areas so ground surface will slope to prevent water running into excavated areas. Until work is completed, remove water from areas of construction that may interfere with proper performance of work or that may result in damage to the soil sub-grade and provide sumps, pumps, well points, electric power and attendance required for this purpose on a 24 hour basis if necessary. Protect construction from water during construction, including prevention of erosion of completed work during construction and until permanent drainage and erosion controls are operational. Repair adjoining properties, facilities and streets damaged due to improper protection.

PART 2 PRODUCTS

2.1 SOIL MATERIALS

A. General: Provide borrow soil materials when sufficient satisfactory soil materials are not available from excavations.

B. Satisfactory Soils: Sand, gravel, friable earth, or non-expansive clays, subject to Testing Laboratory's approval. Fill and backfill material shall be free of organic material, slag, cinders, expansive soils, trash or rubble and stones having maximum dimension greater than six inches.

C. Unsatisfactory Soils: Expansive and other soils as defined in the project's geotechnical investigation report.
   1. Unsatisfactory soils also include satisfactory soils not maintained within two percent of optimum moisture content at time of compaction.

D. Base Course: Material conforming to Caltrans Standard Specification Section 26, Class II Aggregate Base ~~SSPWC section 200-2.2, Crushed Aggregate Base or SSPWC section 200-2.4 Crushed Miscellaneous Base~~. ***ADD-2***

E. Engineered Fill: Naturally or artificially graded mixture of natural or crushed gravel, crushed stone, and natural or crushed sand; ASTM D 2940; with at least 90 percent passing a one and one-half inch sieve and not more than 12 percent passing a No. 200 sieve.

F. Bedding Course: Naturally or artificially graded clean, crushed sand; ASTM D 2940; except with 100 percent passing a 3/8-inch sieve and not more than eight percent passing a No. 200 sieve.

G. Drainage Course: Narrowly graded mixture of washed, crushed stone, or crushed or uncrushed gravel; ASTM D 448; coarse-aggregate grading Size 57; with 100 percent passing a one and one-half inch sieve and zero to five percent passing a No. 8 sieve.

2.2 ACCESSORIES

A. Warning Tape: Acid- and alkali-resistant polyethylene film warning tape manufactured for marking and identifying underground utilities, six inches wide and four mils thick, continuously inscribed with a description of the utility. Color coding shall be according to the American Public Works Association (APWA) standards:
   1. Blue – Potable water and fire suppression lines.
   2. Green – Sanitary sewer and storm drain lines
   3. Orange – Communication, alarm or signal lines
   4. Purple – Reclaimed water, irrigation, and slurry lines
   5. Red – Electrical power lines, cables, conduit and lighting lines
   6. Yellow – Gas, oil, hydronic chilled water, steam, petroleum, or gaseous material lines

PART 3 EXECUTION

3.1 PREPARATION

A. Protect structures, utilities, sidewalks, pavements, and other facilities from damage caused by settlement, lateral movement, undermining, washout, and other hazards created by earthwork operations.

B. Preparation of subgrade for earthwork operations including removal of vegetation, topsoil, debris, obstructions, and deleterious materials from ground surface is specified in Division 2 Section "Site Clearing" or "Demolition".

C. Protect and maintain erosion and sedimentation controls, which are specified in Division 2 Section "Site Clearing" or "Demolition," during earthwork operations.

3.2 EXCAVATION

A. Unclassified Excavation: Excavate to subgrade elevations regardless of the character of surface and subsurface conditions encountered. Unclassified excavated materials may include rock, soil materials, and obstructions. No changes in the Contract Sum or the Contract Time will be authorized for rock excavation or removal of obstructions.

1. If excavated materials intended for fill and backfill include unsatisfactory soil materials and rock, replace with satisfactory soil materials.

3.3 EXCAVATION FOR STRUCTURES

A. Excavate to indicated elevations and dimensions within a tolerance of plus or minus 1 inch. If applicable, extend excavations a sufficient distance from structures for placing and removing concrete formwork, for installing services and other construction, and for inspections.

1. Excavations for Footings and Foundations: Do not disturb bottom of excavation. Excavate by hand to final grade just before placing concrete reinforcement. Trim bottoms to required lines and grades to leave solid base to receive other work.

3.4 EXCAVATION FOR WALKS AND PAVEMENTS

A. Excavate surfaces under walks and pavements to indicated lines, cross sections, elevations, and subgrades.

3.5 EXCAVATION FOR UTILITY TRENCHES

A. Excavate trenches to indicated gradients, lines, depths, and elevations.

B. Excavate trenches to uniform widths to provide six-inch clearance on each side of pipe or conduit. Excavate trench walls vertically from trench bottom to 12 inches higher than top of pipe or conduit, unless otherwise indicated.

C. Trench Bottoms: Excavate and shape trench bottoms to provide uniform bearing and support of pipes and conduit. Shape subgrade to provide continuous support for bells, joints, and barrels of pipes and for joints, fittings, and bodies of conduits. Remove projecting stones and sharp objects along trench subgrade.

1. Excavate trenches six inches deeper than elevation required in rock or other unyielding bearing material, four inches deeper elsewhere, to allow for bedding course.

3.6 SUBGRADE INSPECTION

A. Proof-roll subgrade below the building slabs and pavements with heavy pneumatic-tired equipment to identify soft pockets and areas of excess yielding. Do not proof-roll wet or saturated subgrades.

B. Reconstruct subgrades damaged by freezing temperatures, frost, rain, accumulated water, or construction activities, as directed by Architect, without additional compensation.

3.7 UNAUTHORIZED EXCAVATION

A. Fill unauthorized excavation under foundations or wall footings by extending bottom elevation of concrete foundation or footing to excavation bottom, without altering top elevation. Lean concrete fill, with 28-day compressive strength of 2,500 psi, may be used when approved by Architect.

1. Fill unauthorized excavations under other construction or utility pipe as directed by Architect.

3.8 STORAGE OF SOIL MATERIALS

A. Stockpile borrow soil materials and excavated satisfactory soil materials without intermixing. Place, grade, and shape stockpiles to drain surface water. Cover to prevent windblown dust.

1. Stockpile soil materials away from edge of excavations. Do not store within drip line of remaining trees.

3.9 UTILITY TRENCH BACKFILL

A. Place backfill on subgrades free of mud, frost, snow, or ice.

B. Place and compact bedding course on trench bottoms and where indicated. Shape bedding course to provide continuous support for bells, joints, and barrels of pipes and for joints, fittings, and bodies of conduits.

C. Backfill trenches excavated under footings and within 18 inches of bottom of footings with satisfactory soil; fill with concrete to elevation of bottom of footings. Concrete is specified in Division 3 Section Cast-in-Place Concrete.

D. Provide four-inch-thick, concrete-base slab support for piping or conduit less than 30 inches below surface of roadways. After installing and testing, completely encase piping or conduit in a minimum of four inches of concrete before backfilling or placing roadway base.

E. Place and compact initial backfill of satisfactory soil, free of particles larger than one inch in any dimension, to a height of 12 inches over the utility pipe or conduit.

1. Carefully compact initial backfill under pipe haunches and compact evenly up on both sides and along the full length of utility piping or conduit to avoid damage or displacement of piping or conduit. Coordinate backfilling with utilities testing.

F. Place and compact final backfill of satisfactory soil to final subgrade elevation.

G. Install warning tape directly above utilities, minimum 6 inches above top of pipe, minimum 12 inches below finished grade, except six inches below subgrade under pavements and slabs.

3.10 SOIL FILL

A. Plow, scarify, bench, or break up sloped surfaces steeper than 1 vertical to 4 horizontal so fill material will bond with existing material.

B. Place and compact fill material in layers to required elevations as follows:

1. Under grass and planted areas, use satisfactory soil material.
2. Under walks and pavements, use engineered fill.
3. Under steps and ramps, use engineered fill.
4. Under building slabs, use engineered fill.
5. Under footings and foundations, use engineered fill.

3.11 SOIL MOISTURE CONTROL

A. Uniformly moisten or aerate subgrade and each subsequent fill or backfill soil layer before compaction to within two percent of optimum moisture content.

1. Do not place backfill or fill soil material on surfaces that are muddy, frozen, or contain frost or ice.
2. Remove and replace, or scarify and air dry otherwise satisfactory soil material that exceeds optimum moisture content by two percent and is too wet to compact to specified dry unit weight.

3.12 COMPACTION OF SOIL BACKFILLS AND FILLS

A. Place backfill and fill soil materials in layers not more than eight inches in loose depth for material compacted by heavy compaction equipment, and not more than four inches in loose depth for material compacted by hand-operated tampers.

B. Place backfill and fill soil materials evenly on all sides of structures to required elevations, and uniformly along the full length of each structure.

C. Compact soil materials to not less than the following percentages of maximum dry unit weight according to ASTM D 1557:

1. Under structures, building slabs, steps, and pavements, scarify and recompact top 12 inches of existing subgrade and each layer of backfill or fill soil material to 95 percent.
2. Under walkways, scarify and recompact top six inches below subgrade and compact each layer of backfill or fill soil material to 90 percent.
3. Under lawn or unpaved areas, scarify and recompact top six inches below subgrade and compact each layer of backfill or fill soil material to 85 percent.

4. For utility trenches, compact each layer of initial and final backfill soil material to 85 percent.

3.13 GRADING

A. General: Uniformly grade areas to a smooth surface, free of irregular surface changes. Comply with compaction requirements and grade to cross sections, lines, and elevations indicated.

B. Site Grading: Slope grades to direct water away from buildings and to prevent ponding. Finish subgrades to required elevations within the following tolerances:
   1. Lawn or Unpaved Areas: Plus or minus one inch.
   2. Walks: Plus or minus one inch.
   3. Pavements: Plus or minus one-half inch.

C. Grading inside Building Lines: Finish subgrade to a tolerance of one-half inch when tested with a 10-foot straightedge.

3.14 BASE COURSES

A. Place base course on subgrades free of mud, frost, snow, or ice.

B. On prepared subgrade, place base course under pavements and walks as follows:
   1. Shape base course to required crown elevations and cross-slope grades.
   2. Compact base course at optimum moisture content to required grades, lines, cross sections, and thickness to not less than 95 percent of maximum dry unit weight according to ASTM D 1557.

3.15 DRAINAGE COURSE

A. Place drainage course on subgrades free of mud, frost, snow, or ice.

B. On prepared subgrade, place and compact drainage course under cast-in-place concrete slabs-on-grade as follows:
   1. Place drainage course that exceeds six inches in compacted thickness in layers of equal thickness, with no compacted layer more than six inches thick or less than three inches thick.
   2. Compact each layer of drainage course to required cross sections and thicknesses to not less than 95 percent of maximum dry unit weight according to ASTM D 698.

3.16 FIELD QUALITY CONTROL

A. Testing Agency: Owner will engage a qualified independent geotechnical engineering testing agency to perform field quality-control testing.

B. Allow testing agency to inspect and test subgrades and each fill or backfill layer. Proceed with subsequent earthwork only after test results for previously completed work comply with requirements.

C. Footing Subgrade: At footing subgrades, at least one test of each soil stratum will be performed to verify design bearing capacities. Subsequent verification and approval of other footing subgrades may be based on a visual comparison of subgrade with tested subgrade when approved by Architect.

D. Testing agency will test compaction of soils in place according to ASTM D 1556, ASTM D 2167, ASTM D 2922, and ASTM D 2937, as applicable.

E. When testing agency reports that subgrades, fills, or backfills have not achieved degree of compaction specified, scarify and moisten or aerate, or remove and replace soil to depth required; recompact and retest until specified compaction is obtained.

3.17 PROTECTION

A. Protecting Graded Areas: Protect newly graded areas from traffic, freezing, and erosion. Keep free of trash and debris.

B. Repair and reestablish grades to specified tolerances where completed or partially completed surfaces become eroded, rutted, settled, or where they lose compaction due to subsequent construction operations or weather conditions.

C. Where settling occurs before Project correction period elapses, remove finished surfacing, backfill with additional soil material, compact, and reconstruct surfacing.

1. Restore appearance, quality, and condition of finished surfacing to match adjacent work, and eliminate evidence of restoration to greatest extent possible.

3.18 DISPOSAL OF SURPLUS AND WASTE MATERIALS

A. Disposal: Remove surplus satisfactory soil and waste material, including unsatisfactory soil, trash, and debris, and legally dispose of it off Owner's property.

END OF SECTION

SECTION 316329
DRILLED CONCRETE PIERS AND SHAFTS

Revised, Addendum #2, 09/01/2017

PART 1 GENERAL

1.1 RELATED DOCUMENTS

A. Drawings and general provisions of the Contract, including General and Supplementary Conditions and Division 1 Specification Sections, apply to this Section.

1.2 SUMMARY

A. This Section includes:

1. Dry-installed drilled piers.
2. Slurry displacement-installed drilled piers.
3. Dry-installed or slurry displacement-installed drilled piers, at Contractor's choice.

B. Related Sections include the following:

1. Division 03 Section “Cast in Place Concrete” for general structural and building applications of concrete and reinforcement. ***ADD-2***

~~2. Division 03 Section “Concrete Reinforcement.”~~ ***ADD-2***

1.3 REFERENCES

A. Standards listed below apply where designation is cited in this Section. Where the applicable year of adoption or revision is not listed below, the latest edition applies.

B. American Concrete Institute (ACI): Use applicable year of adoption or revision as published in the “ACI Manual of Concrete Practice”.

1. ACI 336.1: Standard Specification for the Construction of Drilled Piers.

C. American Society for Testing and Materials (ASTM): Use applicable year of adoption or revision as published in the “Annual Book of ASTM Standards”.

1. ASTM A 252: Specification for Welded and Seamless Pipe Piles.
2. ASTM A 36: Standard Specification for Carbon Structural Steel.

D. CBC: 2013 California Building Code

E. Evaluation Report: Where designated in this Section, products shall have an active Evaluation Report evidencing compliance with provisions of the International Building Code. Reports are available at www.icc-es.org and www.iapmoes.org.

F. Geotechnical Report: “Geotechnical Engineering Report Proposed Science Center, Santa Ana, California”, by Geotechnologies Inc, dated June 27, 2016 and all subsequent addenda. ***ADD-2***

1.4 SUBMITTALS

A. Submittal procedures and administrative provisions are established by Division 01 Section "Submittals".

B. Product Data: For each type of product indicated.

C. Design Mixes: For each class of concrete. Include revised mix proportions when characteristics of materials, project conditions, weather, test results, or other circumstances warrant adjustments.

D. Shop Drawings: For concrete reinforcement detailing fabricating, bending, and placing.

E. Shaft Drilling Reports: Record of as-built pier location, diameter, tip elevation, cut off elevation, reinforcing and concrete placement.

F. Submit pier installation and proposed temporary shaft protection plan to the Owner's Geotechnical Engineer at least four weeks prior to mobilization.

1. The installation and shaft protection plan shall provide information on the following:

    a. Name and experience record of the drilled pier superintendent who will be in charge of drilled pier operations for the project.

    b. List of proposed equipment to be used, including cranes, drills, augers, bailing buckets, final cleaning equipment, de-sanding equipment, slurry pumps, core sampling equipment, tremies, concrete pumps, casing.

    c. Details of overall construction operation sequence and the sequence and schedule of shaft construction.

    d. Details of shaft excavation methods.

    e. When the use of slurry is anticipated, details of the mix design and its suitability for the subsurface conditions at the construction site, mixing and storage methods, maintenance methods, disposal procedures, slurry mixing procedures, pumping and handling equipment, testing procedures, slurry cleaning procedures, recycling and disposal procedures.

    f. Details of methods to clean the shaft excavation.

    g. Details of reinforcement placement, including support and centralization methods.

    h. Details of concrete placement, including proposed operational procedures for free fall, tremie or pumping methods.

    i. Details of casing installation and removal methods.

2. The Geotechnical Engineer will evaluate the drilled pier installation plan for conformance with the plans, specifications and special provisions. Within 14 days after receipt of the installation plan, the Geotechnical Engineer will notify the contractor of any additional information required and or changes necessary to meet the contract requirements. All procedural approvals given by the Geotechnical Engineer shall be subject to trial in the field and shall not relieve the Contractor of the responsibility to satisfactorily complete the work as detailed in the plans and specifications.

G. Submit a survey plan locating new drilled piers after installation. Actual pier locations and pier reinforcement to be coordinated with pier cap reinforcement.

H. Submit a concrete placement procedure for drilled piers for 30 minutes maximum interruption of placement. The procedure shall include a contingency plan that gives an additional 15 minutes of interruption of placement.

1.5 QUALITY ASSURANCE

A. Contractor Qualifications:

1. Minimum of 3 successful projects with similar soil conditions, shaft sizes, depth and volumes of work contained in this project.

2. Submit proof of compliance within 30 days after "Notice to Proceed."

B. Survey Work: Engage a California licensed land surveyor to perform surveys, layouts and measurements for drilled pier work.

1. Conduct layout work for each pier to lines and levels required before excavation and actual measurements of each pier's horizontal axial location, shaft diameter, bottom and top elevations, deviations from specified tolerances and other data as required.
2. Record and maintain information pertinent to each pier and cooperate with other testing and inspection personnel to provide data required for reports.
3. The Owner's Geotechnical Engineer will inspect shafts prior to and after the installation of reinforcement, test soil materials and verify pier depth. The Geotechnical engineer will also inspect shafts prior to concrete placement.
4. If the Geotechnical Engineer's inspection determines that there is loose material in the shaft excavation, the Contractor will clean the hole as directed by the Geotechnical Engineer, including the removal of the reinforcing cage as required.
5. The Owner's Testing Agency will inspect installation of reinforcing and placement of concrete in drilled piers.
6. Materials and installed work may require testing and retesting at any time during the progress of work. Allow free access to material stockpiles and facilities.

1.6 PROJECT CONDITIONS

A. Subsurface Information: Refer to Geotechnical Report.

B. Existing Utilities: Locate existing underground utilities by careful hand excavation before starting shaft excavation operations.

1. If utilities are to remain in place, provide protection from damage during construction operations.
2. Should uncharted or incorrectly charted piping or other utilities be encountered during excavation, consult Owner immediately for directions as to procedure.
3. Cooperate with Owner and public and private utility companies in keeping their respective service and facilities in operation at all times.
4. Repair damaged utilities to the satisfaction of the utility owner.
5. Do not interrupt existing utility serving facilities occupied and used by Owner or others, except where permitted in writing by Owner's Representative and then only after acceptable temporary utility services have been provided.

C. Environmental Requirements: Groundwater is expected to be encountered during drilling. See Geotechnical Report for expected depth.

1. Provide adequate temporary drainage to prevent shaft instability.
2. Pump shafts when directed by the Geotechnical Engineer.

D. Barricade excavations as required in accordance with Division 1 Section "Temporary Facilities and Controls."

PART 2 - PRODUCTS

2.1 MATERIALS

A. Concrete Reinforcement: See Division 3 Section "Cast-in-Place Concrete~~Concrete Reinforcement~~." ***ADD-2***

B. Concrete Materials: See Division 3 Section "Cast-in-Place Concrete."

C. Steel Pipe Casings: ASTM A 283, Grade C; or ASTM A 36, carbon-steel plate, with joints full-penetration welded according to AWS D1.1.

D. Slurry: Pulverized sodium bentonite, pulverized attapulgite, or polymers, mixed with water to form stable colloidal suspension; complying with ACI 336.1 for density, viscosity, sand content, and pH. Super Mud manufactured by PDS Company Inc. or approved equal. To be used in accordance with manufacturer's recommendations.

E. Concrete Mix:

1. Prepare design mixes according to ACI 211.1 and ACI 301 for each type and strength of concrete determined by either laboratory trial mix or field test databases. Mix designs shall be stamped and signed by a registered Civil or Structural engineer licensed in the state of California. Contractor shall bear all costs for concrete mix designs.

    a. Use a qualified testing agency for preparing and reporting proposed mix designs for laboratory trial mix basis.

2. Proportion mixes according to ACI 211.1 and ACI 301 to provide normal-weight concrete with the following properties:

    a. Compressive Strength (28 Days): 4,000 psi.

    b. Minimum Slump: Capable of maintaining the following slump until completion of placement:

        1) 4 inches for dry, uncased, or permanent-cased drilling method.

        2) 6 inches for temporary-casing drilling method.

        3) 7 inches for slurry displacement method.

F. Do not air entrain concrete for drilled piers.

G. Cementitious Materials: Limit percentage, by weight, of cementitious materials other than portland cement according to ACI 301 limits as if concrete were exposed to deicing chemicals.

H. Limit water-soluble, chloride-ion content in hardened concrete to 0.15 percent by weight of cement.

I. Concrete-mix design adjustments may be considered if characteristics of materials, Project conditions, weather, test results, or other circumstances warrant. Resubmit and obtain approval of proposed changes to concrete-mix proportions

PART 3 - EXECUTION

3.1 DESIGN

A. Construct pier reinforcement cage per contract documents and to allow for insertion of a tremie tube for concrete placement. Reinforcing cage shall be free of irregularities that could interfere with insertion and removal of the tremie.

3.2 EXAMINATION

A. Examine site conditions prior to commencement of drilling shafts.

B. Notify immediately the Owner's Representative in writing in the event of unsatisfactory site conditions, indicating the nature of extent of unsatisfactory conditions.

C. Protect adjacent affected structures from damage.

D. Notify the Owner's Representative at least two workdays prior to commencing work.

3.3 SHAFT EXCAVATION

A. Excavate shaft for piers to lengths shown on the drawings. Pier holes shall be reamed with a bucket and auger prior to steel reinforcement cage installation.

1. Excavate shafts only after adjacent holes with 3 pier diameters are filled with concrete and allowed to set for at least 24 hours.

B. Temporary Shaft Protection:

1. Temporary shaft protection is the responsibility of the contractor.
2. Temporary casing and/or drilling slurry shall be required for shaft protection of piers extending below the water table.
3. Temporary casings shall have sufficient thickness to withstand compressive and withdrawal stresses as required to maintain shaft walls without displacing.
4. Remove and replace or repair casings which are damaged during installation and which could impair the strength or efficiency of the completed pier.
5. Remove all casings after placing concrete.
6. The drilling slurry shall be maintained at least six feet above the groundwater level in order to provide adequate support to soil on the walls of the drilled pier excavations.
7. Drilling slurry shall be mixed in external tanks with adequate agitation for the slurry to become uniformly mixed, self-suspending and free of lumps. The slurry shall be mixed in accordance with the manufacturer's recommendations. pH and marsh funnel viscosity testing of the slurry shall be performed before introducing slurry to the drilled hole.
8. During drilling and prior to concrete placement, slurry shall be sampled from the top and bottom of each pier excavation using a double ball bailer. The slurry samples shall be tested for pH, marsh funnel viscosity, sand content and specific weight to confirm that the slurry properties are within the range of the manufacturer's recommendations. Slurry mix testing shall be performed by individuals trained by the manufacturer's representative. Slurry may be recycled for use on subsequent piers.

C. Construction Tolerances:

1. Maximum permissible variation of location at top of pier: Not more than 1/24 of the shaft diameter or 3 inches, whichever is less.
2. Maximum shaft out-of-plumb: Not be more than 1.5 percent of length nor exceeding 12.5 percent of shaft diameter or 15 inches, whichever is less.
3. Concrete cut-off elevation: Plus 1 inch or minus 3 inches.
4. If above tolerances are exceeded, provide additional or corrective construction to compensate for excessive eccentricity.
5. Submit proposed corrective construction methods to Owner's Representative for review before proceeding.

D. Obstructions:

1. Use core barrels with drilling equipment, hand labor using air-powered tools or other safe methods to remove rock, boulders and obstructions.
2. Dispose of excavated material in accordance as required by the Specifications.

3.4 DEWATERING

A. Comply with requirements of Division 1 Section "Temporary Facilities and Controls."

3.5 OVER EXCAVATION

A. No payment will be made for extra length when shafts are excavated to a greater depth than required or authorized by the Owner's Geotechnical Engineer, due to overdrilling by the Contractor.

B. Complete pier depth and fill extra depth with approved concrete if other conditions are satisfactory.

3.6 REINFORCING STEEL

A. Comply with recommendations in CRSI's "Manual of Standard Practice" for fabricating, placing, and supporting reinforcement. See Division 3 Section "Cast-in-Place Concrete~~Concrete Reinforcement~~." ***ADD-2***

B. Clean reinforcement of loose rust and mill scale, earth, and other materials that reduce or destroy bond with concrete.

C. Fabricate and install reinforcing cages symmetrically about axis of shafts in a single unit.

D. Accurately position, support, and secure reinforcement against displacement during concreting. Maintain minimum cover to reinforcement. Use 4 approved spacers equally spaced around the cage. Longitudinal spacing shall not be more than 10-15 feet between spacers to be tied to the cage.

E. Use templates to set anchor bolts, leveling plates, and other accessories furnished in work of other Sections. Provide blocking and holding devices to maintain required position during final concrete placement.

F. Protect exposed ends of extended reinforcement, dowels, or anchor bolts from mechanical damage and exposure to weather and to ensure smooth movement of the tremie.

G. Reinforcing cages must be placed in the same shift that concrete placement occurs. Cages will not be allowed to stay in the hole until the next work shift. Reaming shaft, inspection of shaft, placement of cage, final inspection of shaft and concrete placement should take place in continuous sequence of operations without interruption.

3.7 CONCRETE PLACEMENT

A. Place concrete in continuous operation and without segregation immediately after inspection and approval of shaft by Owner's Geotechnical Engineer, Owner's independent testing and inspecting agency. Provide protection sheets extending at least 12 inches beyond the edges of excavation opening.

B. Dry Method: Place concrete to fall vertically down the center of drilled pier without striking sides of shaft or steel reinforcement.

1. Where concrete cannot be directed down shaft without striking reinforcing, place concrete with chutes, tremies, or pumps.

2. Vibrate top 60 inches of concrete.

C. Slurry Displacement Method: Place concrete in slurry-filled shafts by tremie methods or pumping. Control placement operations to ensure that tremie or pump pipe is embedded no fewer than 60 inches into concrete, and flow of concrete is continuous from bottom to top of drilled pier without segregating the mixed materials.

D. Maintain sufficient pressure head of concrete to prevent reduction in diameter of shaft by earth pressure and to prevent extraneous material from mixing with fresh concrete.

E. Coordinate withdrawal of temporary casings with concrete placement to maintain at least a 60-inch head of concrete above bottom of casing.

F. Screed concrete at cutoff elevation level and apply scoured, rough finish. Where cutoff elevation is above the ground elevation, form top section above grade and extend shaft to required elevation.

G. Interrupted placing operations of over 45 minutes shall not be permitted.

H. Remove excess laitance and slurry contaminated concrete using vacuum truck or other approved means to cut off elevation and backfill hole to working grade with clean sand.

I. Hot and Cold Weather Placement: Provide in accordance with provisions of Division 3 Section "Cast-in-Place Concrete."

3.8 FIELD QUALITY CONTROL

A. Provide field quality control testing and inspection for concrete and reinforcing steel as specified in Division 3 Section "Concrete Reinforcement" and Section "Cast-in-Place Concrete."

B. Notify Owner and Geotechnical Engineer at least 48 hours prior to time that excavations will be ready for inspection and tests.

C. Provide facilities as required to assist inspection and testing of excavations and cooperate with inspecting and testing personnel to expedite work.

D. Geotechnical Engineer:

1. Inspect and report results.
2. Conduct inspections and provide reports as soon as possible so as not to delay concrete placement for acceptable excavations.
3. Inspect shaft borings prior to installation of reinforcement, test soil materials and confirm pier depth.

E. Owner's Testing Agency:

~~1. Inspect placement of reinforcement per Division 3 Section "Concrete Reinforcement."~~ ***ADD-2***

~~2.~~1. Inspect placement of concrete and reinforcement per Division 3 Section "Cast-in-Place Concrete." ***ADD-2***

F. Perform slurry testing and provide results to Owner in accordance with approved Pier Installation Plan.

END OF SECTION

SECTION 321216
ASPHALT PAVING

Revised, Addendum #2, 09/01/17

PART 1 GENERAL

1.1 SUMMARY

A. This Section includes hot-mix asphalt paving, patching and paving overlay.

1.2 SUBMITTALS

A. Product Data: For each type of product indicated. Include technical data and tested physical and performance properties.

B. Job-Mix Designs: Certification, by authorities having jurisdiction, of approval of each job mix proposed for the Work.

C. Material certificates.

D. Log of placement of asphalt, including dates, times, temperature readings and other pertinent information.

1.3 QUALITY ASSURANCE

A. Manufacturer Qualifications: Manufacturer shall be registered with and approved by authorities having jurisdiction or the DOT of the state in which Project is located.

B. Standard Specifications: Comply with the Standard Specifications for Public Works Construction (SSPWC) and the California Department of Transportation (Caltrans), latest editions and supplements for asphalt paving work. These Specifications apply only to performance and materials and how they are to be incorporated into the Work. The legal/contractual relationship sections and the measurement and payment sections do not apply to this document.

C. Asphalt-Paving Publication: Comply with AI MS-22, "Construction of Hot Mix Asphalt Pavements," unless more stringent requirements are indicated.

1.4 PROJECT CONDITIONS

A. Environmental Limitations: Do not apply asphalt materials if subgrade is wet or excessively damp or if the following conditions are not met:
   1. Tack Coat: Minimum surface temperature of 60 degrees Fahrenheit.
   2. Asphalt Base Course: Minimum surface temperature of 40 degrees Fahrenheit and rising at time of placement.
   3. Asphalt Surface Course: Minimum surface temperature of 60 degrees Fahrenheit at time of placement.

B. Pavement-Marking Paint: Proceed with pavement marking only on clean, dry surfaces and at a minimum ambient or surface temperature of 40 degrees Fahrenheit for oil-based materials, 50 degrees Fahrenheit for water-based materials, and not exceeding 95 degrees Fahrenheit.

PART 2 PRODUCTS

2.1 AGGREGATES

~~A. Coarse Aggregate: Crushed rock conforming to SSPWC 400-4.2.3.~~

B. ~~Fine Aggregate: Sand, rock dust, mineral filler, or a blend of these materials conforming to SSPWC 400-4.2.4. Mineral filler, if required, shall conform to SSPWC section 203-6.2.3~~.

C. Aggregate shall conform to the provisions in Caltrans Standard Specification Section 26, Class II Aggregate Base. ***ADD-2***

2.2 ASPHALT MATERIALS

A. Asphalt Binder: Paving asphalt, viscosity grade PG 64-10 conforming to Section 92 of the Caltrans Standard Specifications.

B. Tack Coat: PG 64-10 conforming to Section 92 of the Caltrans Standard Specifications.

C. Mixes: Hot-Mix Asphalt: Dense, hot-laid, hot-mix asphalt plant mix III-C3 PG 64-10 designed in conformance with SSPWC Section 400-4.

2.3 AUXILIARY MATERIALS

A. Herbicide: Commercial chemical for weed control, registered by the EPA. Provide in granular, liquid, or wettable powder form.

B. Pavement-Marking Paint: Latex, waterborne emulsion, lead and chromate free, ready mixed, complying with FS TT-P-1952, with drying time of less than 45 minutes.

1. Color: White, Yellow and Blue per Federal Standard 595 Color 15090).

C. Wheel Stops: Solid, integrally colored, 96 percent recycled HDPE or commingled postconsumer and postindustrial recycled plastic; UV stabilized.

1. Dowels: Galvanized steel, three-fourths-inch diameter, 24-inch minimum length.

PART 3 EXECUTION

3.1 COLD MILLING

A. Clean existing pavement surface of loose and deleterious material immediately before cold milling. Remove existing asphalt pavement by cold milling to grades and cross sections indicated.

1. Mill to a depth of not less than one and one-half inches.

3.2 PATCHING

A. Hot-Mix Asphalt Pavement: Saw cut perimeter of patch and excavate existing pavement section to sound base. Excavate rectangular or trapezoidal patches, extending 12 inches into adjacent sound pavement, unless otherwise indicated. Cut excavation faces vertically. Remove excavated material. Recompact existing unbound-aggregate base course to form new subgrade.

B. Tack Coat: Apply uniformly to vertical surfaces abutting or projecting into new, hot-mix asphalt paving at a rate of 0.05 to 0.15 gallons/square yard.

C. Patching: Fill excavated pavements with hot-mix asphalt base mix and, while still hot, compact flush with adjacent surface.

3.3 SURFACE PREPARATION

A. Proof-roll subbase using heavy, pneumatic-tired rollers to locate areas that are unstable or that require further compaction.

B. Immediately before placing asphalt materials, remove loose and deleterious material from substrate surfaces. Ensure that prepared subgrade is ready to receive paving.

1. Sweep loose granular particles from surface of unbound-aggregate base course. Do not dislodge or disturb aggregate embedded in compacted surface of base course.

C. Herbicide Treatment: Apply herbicide according to manufacturer's recommended rates and written application instructions. Apply to dry, prepared subgrade or surface of compacted-aggregate base before applying paving materials.

D. Tack Coat: Apply uniformly to surfaces of existing pavement at a rate of 0.05 to 0.15 gallons/square yard.
   1. Allow tack coat to cure undisturbed before applying hot-mix asphalt paving.
   2. Avoid smearing or staining adjoining surfaces, appurtenances, and surroundings. Remove spillages and clean affected surfaces.

3.4 HOT-MIX ASPHALT PLACING

A. Machine place hot-mix asphalt on prepared surface, spread uniformly, and strike off. Place asphalt mix by hand to areas inaccessible to equipment in a manner that prevents segregation of mix. Place each course to required grade, cross section, and thickness when compacted.
   1. Spread mix at minimum temperature of 250 degrees Fahrenheit.
   2. Regulate paver machine speed to obtain smooth, continuous surface free of pulls and tears in asphalt-paving mat.

B. Place paving in consecutive strips not less than 10 feet wide unless infill edge strips of a lesser width are required.

C. Promptly correct surface irregularities in paving course behind paver. Use suitable hand tools to remove excess material forming high spots. Fill depressions with hot-mix asphalt to prevent segregation of mix; use suitable hand tools to smooth surface.

3.5 COMPACTION

A. General: Begin compaction as soon as placed hot-mix paving will bear roller weight without excessive displacement. Compact hot-mix paving with hot, hand tampers or vibratory-plate compactors in areas inaccessible to rollers.
   1. Complete compaction before mix temperature cools to 185 degrees Fahrenheit.

B. Breakdown Rolling: Complete breakdown or initial rolling immediately after rolling joints and outside edge. Examine surface immediately after breakdown rolling for indicated crown, grade, and smoothness. Correct laydown and rolling operations to comply with requirements.

C. Intermediate Rolling: Begin intermediate rolling immediately after breakdown rolling while hot-mix asphalt is still hot enough to achieve specified density. Continue rolling until hot-mix asphalt course has been uniformly compacted to the following density:
   1. Average Density: 92 percent of reference maximum theoretical density according to ASTM D 2041, but not less than 90 percent nor greater than 96 percent.

D. Finish Rolling: Finish roll paved surfaces to remove roller marks while hot-mix asphalt is still warm.

E. Protection: After final rolling, do not permit vehicular traffic on pavement until it has cooled and hardened.

F. Erect barricades to protect paving from traffic until mixture has cooled enough not to become marked.

3.6 INSTALLATION TOLERANCES

A. Thickness: Compact each course to produce the thickness indicated within the following tolerances:
   1. Base Course: Plus or minus one-half inch.
   2. Surface Course: Plus one-fourth inch (no minus).

B. Surface Smoothness: Compact each course to produce a surface smoothness within the following tolerances as determined by using a 10-foot straightedge applied transversely or longitudinally to paved areas:
   1. Base Course: One-fourth inch.
   2. Surface Course: One-eighth inch.
   3. Crowned Surfaces: Test with crowned template centered and at right angle to crown. Maximum allowable variance from template is one-fourth inch.

3.7 PAVEMENT MARKING

A. Do not apply pavement-marking paint until layout, colors, and placement have been verified with Architect.

B. Allow paving to age for 30 days before starting pavement marking.

C. Sweep and clean surface to eliminate loose material and dust.

D. Apply paint with mechanical equipment to produce pavement markings, of dimensions indicated, with uniform, straight edges. Apply at manufacturer's recommended rates to provide a minimum wet film thickness of 15 mils.

3.8 WHEEL STOPS

A. Securely attach wheel stops into pavement with not less than two galvanized steel dowels embedded at one-quarter to one-third points. Securely install dowels into pavement and bond to wheel stop. Recess head of dowel one inch beneath top of wheel stop.

3.9 FIELD QUALITY CONTROL

A. Testing Agency: Owner will engage a qualified independent testing and inspecting agency to perform field tests and inspections and to prepare test reports.

B. Additional testing and inspecting, at Contractor's expense, will be performed to determine compliance of replaced or additional work with specified requirements.

C. Remove and replace or install additional hot-mix asphalt where test results or measurements indicate that it does not comply with specified requirements.

3.10 DISPOSAL

A. Except for material indicated to be recycled, remove excavated materials from Project site and legally dispose of them in a landfill by the Environmental Protection Agency (EPA).

END OF SECTION

SECTION 321313
CONCRETE PAVING

Revised, Addendum #2, 09/01/17

PART 1 GENERAL

1.1 SUMMARY

A. This Section includes exterior cement concrete pavement for the following:
   1. Driveways and roadways.
   2. Parking lots.
   3. Curbs and gutters.
   4. Walkways.

1.2 SUBMITTALS

A. Product Data: For each type of product indicated, including admixtures.

B. Design Mixtures: For each concrete pavement mixture.

1.3 QUALITY ASSURANCE

A. Manufacturer Qualifications: Manufacturer of ready-mixed concrete products who complies with ASTM C 94/C 94M requirements for production facilities and equipment.

B. ACI Publications: Comply with ACI 301, "Specification for Structural Concrete," unless modified by requirements in the Contract Documents.

C. All work to be performed and materials to be used shall be in accordance with the Standard Specifications for Public Works Construction (SSWPC), latest edition and supplements.

D. The Contractor shall have one copy of the Standard Specifications at the job site.

E. The Standard Specifications apply only to performance and materials and how they are to be incorporated into the Work. The legal/contractual relationship sections and the measurement and pavement sections do not apply to this document.

PART 2 PRODUCTS

2.1 STEEL REINFORCEMENT

A. ~~Plain-Steel Welded Wire Reinforcement: ASTM A 185, fabricated from as-drawn steel wire into flat sheets.~~ ***ADD-2***

B. Reinforcing Bars: ASTM A 615/A 615M, Grade 60; deformed.

C. Bar Supports: Bolsters, chairs, spacers, and other devices for spacing, supporting, and fastening reinforcing bars, welded wire reinforcement, and dowels in place. Manufacture bar supports according to CRSI's "Manual of Standard Practice."

2.2 CONCRETE MATERIALS

A. Cementitious Material: Use the following cementitious materials, of the same type, brand, and source throughout the Project:
   1. Portland Cement: ASTM C 150, Type II, low alkali. Supplement with the following:

a. Pozzolan: ASTM C618, Class F or N Fly Ash, 100 pounds maximum per cubic yard, containing one percent or less carbon. Fly ash shall not be used in excess of 15 percent by weight of total cement quantity.

B. Combined Aggregates: Gradation "C" conforming to SSPWC Section 201-1.3.2.

C. Water: ASTM C 94/C 94M.

2.3 CURING MATERIALS

A. Liquid Curing Compound: ASTM C309, fugitive dye dissipating type, complying with Rule II 13 of the South Coast Air Quality Management District and Federal Air Quality Regulation 40 CFR 52.254.

B. Moisture-Retaining Cover (Curing Sheet): ASTM C 171, non-staining polyethylene film or white burlap-polyethylene sheet.

C. Water: Potable.

D. Evaporation Retarder: Waterborne, monomolecular film forming; manufactured for application to fresh concrete.

2.4 RELATED MATERIALS

A. Expansion- and Isolation-Joint-Filler Strips: ASTM D 1751, asphalt-saturated cellulosic fiber.

B. Slip-Resistive Aggregate Finish: Factory-graded, packaged, rustproof, nonglazing, abrasive aggregate of fused aluminum-oxide granules or crushed emery with emery aggregate containing not less than 50 percent aluminum oxide and not less than 20 percent ferric oxide; unaffected by freezing, moisture, and cleaning materials.

C. Pavement-Marking Paint: Latex, waterborne emulsion, lead and chromate free, ready mixed, complying with FS TT-P-1952, with drying time of less than 45 minutes.

1. Color: As indicated.

2.5 WHEEL STOPS

A. Wheel Stops: Solid, integrally colored, 96 percent recycled HDPE or commingled postconsumer and postindustrial recycled plastic; UV stabilized.

1. Dowels: Galvanized steel, three-fourths-inch diameter, 24-inch minimum length.

2.6 CONCRETE MIXTURES

A. Prepare design mixtures, proportioned according to ACI 301, with the following properties:

1. Compressive Strength (28 Days): 2,500 pounds per square inch (psi) to 3,500 psi.
2. Maximum Water-Cementitious Materials Ratio at Point of Placement: 0.45
3. Slump Limit: Four inches, plus or minus one inch.

2.7 CONCRETE MIXING

A. Ready-Mixed Concrete: Measure, batch, and mix concrete materials and concrete according to ASTM C 94/C 94M. Furnish batch certificates to Architect for each batch discharged and used in the Work.

PART 3 EXECUTION

3.1 EXAMINATION

A. Proof-roll prepared subbase surface below concrete pavements with heavy pneumatic-tired equipment to identify soft pockets and areas of excess yielding.

3.2 EDGE FORMS AND SCREED CONSTRUCTION

A. Set, brace, and secure edge forms, bulkheads, and intermediate screed guides for pavement to required lines, grades, and elevations. Install forms to allow continuous progress of work and so forms can remain in place at least 24 hours after concrete placement.

B. Clean forms after each use and coat with form-release agent to ensure separation from concrete without damage.

3.3 STEEL REINFORCEMENT

A. General: Comply with CRSI's "Manual of Standard Practice" for fabricating, placing, and supporting reinforcement.

3.4 JOINTS

A. General: Form construction, isolation, and control joints and tool edgings true to line with faces perpendicular to surface plane of concrete. Construct transverse joints at right angles to centerline, unless otherwise indicated.

B. Construction Joints: Set construction joints at side and end terminations of pavement and at locations where pavement operations are stopped for more than one-half hour unless pavement terminates at isolation joints.

C. Isolation Joints: Form isolation joints of preformed joint-filler strips abutting concrete curbs, catch basins, manholes, inlets, structures, walks, other fixed objects, and where indicated.

D. Control Joints: Form weakened-plane control joints, sectioning concrete into areas as indicated. Construct control joints for a depth equal to at least one-fourth of the concrete thickness to match jointing of existing adjacent concrete pavement.

E. Edging: Tool edges of pavement, gutters, curbs, and joints in concrete after initial floating with an edging tool to a one-fourth-inch radius. Repeat tooling of edges after applying surface finishes. Eliminate tool marks on concrete surfaces.

3.5 CONCRETE PLACEMENT

A. Moisten subbase to provide a uniform dampened condition at time concrete is placed.

B. Comply with ACI 301 requirements for measuring, mixing, transporting, and placing concrete.

C. Deposit and spread concrete in a continuous operation between transverse joints. Do not push or drag concrete into place or use vibrators to move concrete into place.

D. Screed pavement surfaces with a straightedge and strike off.

E. Commence initial floating using bull floats or darbies to impart an open textured and uniform surface plane before excess moisture or bleed water appears on the surface. Do not further disturb concrete surfaces before beginning finishing operations or spreading surface treatments.

3.6 FLOAT FINISHING

A. General: Do not add water to concrete surfaces during finishing operations.

B. Float Finish: Begin the second floating operation when bleed-water sheen has disappeared and concrete surface has stiffened sufficiently to permit operations. Float surface with power-driven floats, or by hand floating if area is small or inaccessible to power units. Finish surfaces to true planes. Cut down high spots and fill low spots. Refloat surface immediately to uniform granular texture.

   1. Medium-to-Fine-Textured Broom Finish: Draw a soft bristle broom across float-finished concrete surface perpendicular to line of traffic to provide a uniform, fine-line texture.

C. Slip-Resistive Aggregate Finish: Before final floating, spread slip-resistive aggregate finish on pavement surface according to manufacturer's written instructions.
   1. Cure concrete with curing compound recommended by slip-resistive aggregate manufacturer. Apply curing compound immediately after final finishing.
   2. After curing, lightly work surface with a steel wire brush or abrasive stone and water to expose nonslip aggregate.

D. Chemical Surface Retarder: Water-soluble, liquid, set retarder with color dye, for horizontal concrete surface application, capable of temporarily delaying final hardening of concrete to a depth of reveal specified.
   1. Provide W. R. Grace "Top-Cast" or approved equal.
   2. Contractor to provide a submittal of material certificate with concrete submittal. Upon selection of color, submit 12”x12” sample of material in the specified color finish for review by Owner’s Authorized Representative in addition to the specified mock up. ***ADD-2***

3.7 CONCRETE PROTECTION AND CURING

A. General: Protect freshly placed concrete from premature drying and excessive cold or hot temperatures.

B. Comply with ACI 306.1 for cold-weather protection.

C. Evaporation Retarder: Apply evaporation retarder to concrete surfaces if hot, dry, or windy conditions cause moisture loss approaching 0.2 pounds/square feet by h before and during finishing operations. Apply according to manufacturers written instructions after placing, screeding, and bull floating or darbying concrete, but before float finishing.

D. Begin curing after finishing concrete but not before free water has disappeared from concrete surface.

E. Curing Methods: Cure concrete by moisture curing, moisture-retaining-cover curing, curing compound or a combination of these methods.

3.8 PAVEMENT TOLERANCES

A. Comply with tolerances as follows
   1. ACI 117 establishes few pavement tolerances; those in subparagraphs below are based on ACI 330.1.
   2. Elevation: One-fourth inch
   3. Thickness: Plus three-eighths inch minus one-fourth inch
   4. Surface: Gap below 10-foot-long, unleveled straightedge not to exceed one-fourth inch.
   5. Joint Spacing: Three inches.
   6. Contraction Joint Depth: Plus one-fourth inch no minus.
   7. Joint Width: Plus one-eighth inch, no minus.

3.9 PAVEMENT MARKING

A. Do not apply pavement-marking paint until layout, colors, and placement have been verified with Architect.

B. Allow concrete pavement to cure for 28 days and be dry before starting pavement marking.

C. Sweep and clean surface to eliminate loose material and dust.

D. Apply paint with mechanical equipment to produce pavement markings of dimensions indicated with uniform, straight edges. Apply at manufacturer's recommended rates to provide a minimum wet film thickness of 15 mils.

3.10 WHEEL STOPS

A. Securely attach wheel stops into pavement with not less than two galvanized steel dowels embedded in holes drilled or cast into wheel stops at one-quarter to one-third points. Firmly bond each dowel to wheel stop and to pavement. Securely install dowels into pavement and bond to wheel stop. Recess head of dowel 1 inch beneath top of wheel stop.

3.11 REPAIRS AND PROTECTION

A. Remove and replace concrete pavement that is broken, damaged, or defective or that does not comply with requirements in this Section.

B. Protect concrete from damage. Exclude traffic from pavement for at least 14 days after placement.

C. Maintain concrete pavement free of stains, discoloration, dirt, and other foreign material. Sweep concrete pavement not more than two days before date scheduled for Substantial Completion inspections.

END OF SECTION

SECTION 32 93 20
HYDROSEEDING

Added, Addendum # 2, 09/01/2017

PART 1 - GENERAL

1.1 SUMMARY:

A. Work Included:

1. Division 1 applies to this Section. Provide all labor, materials, appliances, tools, equipment, facilities, transportation, and services necessary for and incidental to performing all operations in connection with the installation of the Work of this Section, complete as shown on the Drawings and/or specified herein.
2. Examine all other Sections for Work related to those other Sections and required to be included in this Section.
3. Fine grading and soil amending in areas to receive hydroseed.
4. Hydroseeding.

B. Related Work:

1. Landscape Irrigation – Section 32 84 00
2. Landscape Planting – Section 32 90 00
3. Landscape Maintenance – Section 32 97 00

C. References

1. ASTM D422 Standard Test Method for Particle-Sized Analysis of Soils
2. ASTM D2434 Standard Test Method for Permeability of Granular Soils (Constant Head)
3. State of California Agricultural Code, latest edition
4. Sunset Western Garden Book, latest edition
5. USA Standards for Nursery Stocks (ANSI 260.1-2004)
6. Uniform Building Code (UBC)

1.2 SUBMITTALS:

A. Samples/Cut Sheets required are listed below:

1. Cut Sheets for Hydroseed, Promatrix, Hydropost Compost, Biosol, Am120, and Tri-C.
2. Fertilizer Analysis: provide labels of each fertilizer used and the quantities used in each application.
3. Agronomic soil report per Section 2.1. H and I, and 3.3 for Class A Top Soil.

B. Site Visits: The College Representative will make periodic site visits to observe the planting process. The Contractor shall give a minimum 48 hours advance notice before the requested visit.

1.3 QUALITY ASSURANCE AND REQUIREMENTS

A. Standards for Materials

1. Provide hydroseed materials meeting or exceeding specifications of Federal, State, County, and Municipal laws requiring inspection for plant disease and insect control.
2. In all cases, botanical names shall take precedence over common names.

B. Work Force:

1. Experience: The landscape contractor shall have a valid California C27 license and a minimum of six (6) years of experience in hydroseed installation, hydroseed establishment, and landscape supervision, with experience in maintenance, entomology, pest control, soils, fertilizers, and plant identification. The landscape hydroseed installation company shall provide at least one English-speaking person full time assigned to the job for the duration of the contract.
2. The Supervision: The landscape contractor's job foreman shall have a minimum of four (4) years of experience in hydroseed installation, and supervision and shall directly supervise the work force at all times. Notify the College Representative of all changes in supervision.
3. Labor Force: The landscape contractor's labor force shall be thoroughly familiar and trained in the work to accomplish and perform the task in a competent, efficient manner acceptable to the College Representative.
4. Seed Nursery Qualifications: A California state licensed seed nursery specializing in the collection and distribution of plant seed with three years documented experience.
5. Maintenance Services: Performed by the installation contractor.
6. Identification: Provide proper identification at all times for the landscape contractor's labor force. Be uniformly dressed in a manner satisfactory to the College Representative

C. Quantities and Types: Furnish hydroseed in the quantities and/or spacing as shown or noted for each location, and of the species kind and size described in the "Hydro Seed Mix," or as indicated on the drawings.

D. Substitutions:

1. Submit documentation to the College Representative no later than twenty-five (25) days after award of contract to confirm hydroseed and application materials are available. Any and all substitutions due to unavailability must be requested in writing prior to confirmation of ordering at that time.
2. The Contractor shall submit specifications of any item being used on site upon the request of the College Representative.

1.4 WARRANTIES AND REPLACEMENTS:

A. Refer to General Conditions.

B. Hydroseed Replacements: (see 3.4 B) shall be furnished, planted, and fertilized as specified at no additional cost to the Owner.

1.5 VERIFICATIONS OF DIMENSIONS AND QUANTITIES

A. Verify scaled dimensions and quantities of hydroseed mix prior to start of work

B. Notify College Representative of discrepancies between the Drawings and Specifications and actual job site conditions which would affect the execution of the landscape work. Do not work in areas where the discrepancies occur until instructed by the College Representative.

C. Plant quantities noted on Drawings are for the convenience of the Contractor only and do not limit the Contractor to those specific quantities. Furnish the quantities as may be necessary to do the specific work.

PART 2 - PRODUCTS

2.1 TOP SOILS:

A. General: This project utilizes three distinct classes of top soil as indicated in the Construction Documents and as outlined below. A good Class A Topsoil may be found on site and conditioned to help improve the physical soil properties.

B. Possible sources of Class A Topsoil:

1. Excavations or grading of native topsoil from undeveloped areas.
2. Excavations or grading of topsoil from previously landscaped or farmed areas.
3. Excavations or grading of topsoil from previously non-landscaped or non-farmed areas if the soil is thoroughly evaluated for potential toxic materials.
4. Soil supply companies supplying natural topsoil without excessive amending.
5. Manufacturing of topsoil with less desirable soil as long as the soil has matured and developed the characteristics of a Class A Topsoil.

C. Class A Topsoil:

1. Topsoil shall be free of roots, clods and stones larger have 1 inch (in the upper 6**”** of soil), pockets of coarse sand, noxious weeds such as nut grass roots and nodules, sticks, brush and other litter. It shall not be infested with nematodes or other undesirable insects or plant disease organisms and/or pathogens.
2. Topsoil: top 3” shall be friable and have sufficient structure in order to give good structure and aeration to the soil.
3. Gradation limits: Soil shall be a sandy loam, loam or clay loam. The definition of soil texture shall be per the USDA classification scheme. Gravel over 1/4 inch in diameter shall be less than 20% by weight.
4. Permeability rate: Hydraulic conductivity rate shall be not less than one inch per hour nor more than 20 inches per hour when tested in accordance with the USDA Handbook Number 60, method 34b or other approved methods.
5. Fertility: The range of the essential elemental concentration in soil shall be as follows:

a.	Ammonium Bicarbonate/DTPA Extraction parts per million (mg/kilogram) dry weight basis	
b.	Phosphorus	2 - 40
c.	potassium	40 – 220
d.	iron	2 - 35
e.	manganese	0.3 - 6

f. zinc 0.6 - 8

g. copper 0.1 - 5

h. boron 0.2 - 1

i. magnesium 50 - 150

j. sodium 0 - 100

k. sulfur 25 - 500

l. molybdenum 0.1 - 2

6. To 3" of soil may need to be amended and conditioned to optimize plant growth. The above listed fertility is for soil selection.

7. Concentration of nutrients for final acceptance:

   a. Ammonium Bicarbonate/DTPA Extraction parts per million (mg/kilogram) dry weight basis

   b. phosphorus 10 - 40

   c. potassium 100 - 220

   d. iron 24- 35

   e. manganese 0.6 - 6

   f. zinc 1 - 8

   g. copper 0.3 - 5

   h. boron 0.2 - 1

   i. magnesium 50 - 150

   j. sodium 0 - 100

   k. sulfur 25 - 500

   l. molybdenum 0.1 - 2

8. Acidity: The soil pH range measured in the saturation extract (Method 21a, USDA Handbook Number 60) shall be 6.0 - 7.9.

9. Salinity: The salinity range measured in the saturation extract (Method 3a, USDA Handbook Number 60) shall be 0.5 - 2.5 dS/m.

10. Chloride: The maximum concentration of soluble chloride in the saturation extract (Method 3a, USDA Handbook Number 60) shall be 150 mg/l (parts per million).

11. Boron: The maximum concentration of soluble boron in the saturation extract (Method 3a, USDA Handbook Number 60) shall be 1 mg/l (parts per million).

12. Sodium Adsorption Ratio (SAR): The maximum SAR shall be 3 measured per Method 20b, USDA Handbook Number 60.

13. Aluminum: Available aluminum measured with the Ammonium Bicarbonate/DTPA Extraction shall be less than 3 parts per million.

14. Soil Organic Matter Content: Sufficient soil organic matter shall be present to impart good physical soil properties but not be excessive to cause toxicity or cause excessive reduction in the volume of soil due to decomposition of organic matter. The desirable range is 3% to 7%. The carbon/nitrogen ratio should be about 10. A high carbon/nitrogen ratio can indicate the presence of hydrocarbons or non-humified organic matter.

15. Calcium Carbonate Content: Free calcium carbonate (limestone) shall not be present for acid-loving plants.

16. Heavy Metals: The maximum permissible elemental concentration in the soil shall not exceed the following concentrations:

    a. Ammonium Bicarbonate/DTPA Extraction parts per million (mg/kilogram) dry weight basis:

1)	arsenic	1
2)	cadmium	1
3)	chromium	10
4)	cobalt	2
5)	lead	30
6)	mercury	1
7)	nickel	5
8)	selenium	3
9)	silver	0.5
10)	vanadium	3

17. If the soil pH is between 6 and 7, the maximum permissible elemental concentration shall be reduced 50%. If the soil pH is less than 6.0, the maximum permissible elemental concentration shall be reduced 75%. No more than three metals shall be present at 50% or more of the above values.

18. Phytotoxic constituent, herbicides, hydrocarbons, etc: Germination and growth of monocots and dicots shall not be restricted more than 10% compared to the reference soil. Total petroleum hydrocarbons shall not exceed 50 mg/kg dry soil measured per the modified EPA Method No. 8015. Total aromatic volatile organic hydrocarbons (benzene, toluene, xylene and ethylbenzene) shall not exceed 0.5 mg/kg dry soil measured per EPA Methods No. 8020.

D. Suitable Imported Soil (as required by Soils Report recommendations):

1. Topsoil shall be free of roots, clods and stones larger have 1 inch (in the upper 6” of soil), pockets of coarse sand, noxious weeds such as nut grass roots and nodules, sticks, brush and other litter. It shall not be infested with nematodes or other undesirable insects or plant disease organisms and/or pathogens.

2. Topsoil: top 3” shall friable and have sufficient structure in order to give good tilth and aeration to the soil.

3. Gradation limits: Soil shall be a sandy loam. The definition of soil texture shall be per the USDA classification scheme. Gravel over ¼ inch in diameter shall be less than 10% by weight.

4. Permeability rate: Hydraulic conductivity rate shall be not less than one inch per hour nor more than 20 inches per hour when tested in accordance with the USDA Handbook Number 60, method 34b or other approved methods.

5. Fertility: The range of the essential elemental concentration in soil shall be as follows:

    a. Ammonium Bicarbonate/DTPA Extraction parts per million (mg/kilogram) dry weight basis:

1)	phosphorus	2 - 40
2)	potassium	40 - 220

3) iron 2 - 35
4) manganese 0.3 - 6
5) zinc 0.6 - 8
6) copper 0.1 - 5
7) boron 0.2 - 1
8) magnesium 50 - 150
9) sodium 0 - 100
10) sulfur 25 - 500
11) molybdenum 0.1 - 2

6. Soil may need to be amended and conditioned to optimize plant growth. The above listed fertility is for soil selection.
7. Concentration of nutrients for final acceptance:
    a. Ammonium Bicarbonate/DTPA Extraction parts per million (mg/kilogram) dry weight basis:
        1) phosphorus 10 - 40
        2) potassium 100 - 220
        3) iron 24- 35
        4) manganese 0.6 - 6
        5) zinc 1 - 8
        6) copper 0.3 - 5
        7) boron 0.2 - 1
        8) magnesium 50 - 150
        9) sodium 0 - 100
        10) sulfur 25 - 500
        11) molybdenum 0.1 - 2
8. Acidity: The soil pH range measured in the saturation extract (Method 21a, USDA Handbook Number 60) shall be 6.0 - 7.9.
9. Salinity: The salinity range measured in the saturation extract (Method 3a, USDA Handbook Number 60) shall be 0.5 - 2.5 dS/m.
10. Chloride: The maximum concentration of soluble chloride in the saturation extract (Method 3a, USDA Handbook Number 60) shall be 150 mg/l (parts per million).
11. Boron: The maximum concentration of soluble boron in the saturation xtract (Method 3a, USDA Handbook Number 60) shall be 1 mg/l (parts per million).
12. Sodium Adsorption Ratio (SAR): The maximum SAR shall be 3 measured per Method 20b, USDA Handbook Number 60.
13. Aluminum: Available aluminum measured with the Ammonium Bicarbonate/DTPA Extraction shall be less than 3 parts per million.
14. Soil Organic Matter Content: Sufficient soil organic matter shall be present to impart good physical soil properties but not be excessive to cause toxicity or cause excessive reduction in

the volume of soil due to decomposition of organic matter. The desirable range is 3% to 7%. The carbon/nitrogen ratio should be about 10. A high carbon/nitrogen ratio can indicate the presence of hydrocarbons or non-humified organic matter.

15. Calcium Carbonate Content: Free calcium carbonate (limestone) shall not be present for acid-loving plants.

16. Heavy Metals: The maximum permissible elemental concentration in the soil shall not exceed the following concentrations:

    a. Ammonium Bicarbonate/DTPA Extraction parts per million (mg/kilogram) dry weight basis

        1) arsenic 1
        2) cadmium 1
        3) chromium 10
        4) cobalt 2
        5) lead 30
        6) mercury 1
        7) nickel 5
        8) selenium 3
        9) silver 0.5
        10) vanadium 3

    b. If the soil pH is between 6 and 7, the maximum permissible elemental concentration shall be reduced 50%. If the soil pH is less than 6.0, the maximum permissible elemental concentration shall be reduced 75%. No more than three metals shall be present at 50% or more of the above values.

17. Phytotoxic constituent, herbicides, hydrocarbons, etc: Germination and growth of monocots and dicots shall not be restricted more than 10% compared to the reference soil. Total petroleum hydrocarbons shall not exceed 50 mg/kg dry soil measured per the modified EPA Method No. 8015. Total aromatic volatile organic hydrocarbons (benzene, toluene, xylene and ethylbenzene) shall not exceed 0.5 mg/kg dry soil measured per EPA Methods No. 8020.

E. Quality controls: All imported topsoil for the planting areas shall receive an “Agricultural Suitability Analysis of Soil” at the source and then once again upon delivery to the site before being placed in the planting areas. These tests are to be collected, analyzed and recommendations made by Wallace Laboratories, 365 Coral Circle, El Segundo CA 90245, Ph. (310) 615-0116, Fax (310)640-6863. Cost for these services will be paid for by the Contractor. Tests shall be submitted to the College Representative for approval before placing soils. Contractor shall allow two weeks for each round of soil testing to take place. Tests shall include the following:

1. Must include pH measurement in the Saturation Extract, Electro conductivity of the saturation extract and Sodium Adsorption Ratio of the saturation extract. The approved procedures are the following:

    a. PH - Method 21
    b. Saturation Extract - Method 2
    c. Sodium Adsorption Ratio- Method 20b

2. Methods of the United States Salinity Laboratory as published in the Agricultural Handbook Number 60 entitled "Diagnosis and Improvement of Saline and Alkali Soils".
3. The following nutrients and elements must be determined with an approved extraction method. Interpretation data must be given citing concentrations which are considered to be low, medium and high: boron, calcium, copper, iron, magnesium, Manganese, molybdenum, phosphorus, potassium, sodium, sulfur, and zinc.
4. The approved methods are those cited by the Council on Soil Testing and Plant Analysis and those methods currently used by soil scientists and agronomists and published in Communications in Soil Science and Plant Analysis, Soil Science and Soil Science Society of America Journal. Approved methods are Mehlich Number 3, Bray PI, Bray P2, Olsen P, DTPA, ammonium acetate, ammonium bicarbonate-DTPA, with hot water extract for boron.
5. The saturated extract must be analyzed for calcium, magnesium, sodium, boron, chloride, nitrate, and sulfate.
6. The following trace metals must be measured by the DTPA extract: Aluminum, arsenic, cadmium, chromium, cobalt, lead, lithium, nickel, selenim, silver, strontium, tin and vanadium.
7. The presence of calcium carbonate and/or magnesium carbonate must be determined by commonly used methods.
8. Soil Texture (gravel, sand, silt and clay) and percent gravel must be determined.
9. Determine organic matter content by the measurement of organic carbon. The quality of the organic matter shall be determined by measuring organic carbon and total nitrogen.
10. Interpretation of nutritional deficiencies or excesses and potential toxicities must be given.
11. Water Infiltration Rate: determined using Method 34b of Agricultural Handbook Number 60.
12. Growth Test for Toxic Constituents and/or Poor Physical Properties. Grow a dicot plant species and a monocot species with and without activated charcoal. Measure yield and percent of germination for all treatments. Report conclusions and finding.
13. Approved methods: the American Society of Agronomy as published in the Methods of Soil Analysis, methods of the United States Salinity Laboratory as published in the Agricultural Handbook Number 60 entitled "Diagnosis and Improvement of Saline and Alkali Soils," Base Saturation – Methods 18 and 20 of Agricultural Handbook Number 60, Cation Exchange Capacity - Methods 18 and 20 of Agricultural Handbook Number 60 and bulk density of clods by the Method published in Soil Science, vol 155, 325-330 (1993):

F. Contractor Responsibilities:

1. Provide inspections, tests (see section 3.3 for more information on testing) and similar quality control services as specified below; see Subsection J, Submittals. Cost for these services will be paid by the Contractor.
2. Employ and pay an independent agency to perform specified quality control services.
3. Owner will engage and pay for services of an independent agency to perform inspections and tests, which are not required by the specification.
4. Retest where results of required inspections, tests or similar services prove unsatisfactory workmanship and materials and do not indicate compliance with specifications regardless of whether the tests and services were not the responsibility of the Contractor will be paid by the Contractor.

G. Owner Responsibilities: Owner will provide and pay for inspections, tests and similar quality control services not specified.

H. Duties of the Testing Agency:

1. Retest where results of required inspections, tests or similar services prove unsatisfactory workmanship and materials and do not indicate compliance with specifications regardless of whether the tests and services were not the responsibility of the Contractor will be paid by the Contractor.
2. Independent testing agency engaged to perform inspections, sampling and testing of materials shall cooperate with College Representative and Contractor in performance of its duties and shall provide qualified personnel to perform required inspections and tests.
3. Agency shall notify College Representative, Owner and Contractor promptly of irregularities or deficiencies observed in the work or materials during performance of its services.
4. Agency is not authorized to release, revoke, alter or enlarge requirements or specifications or approve or accept any portion of the work or materials.
5. Agency shall not perform the duties of the Contractor.

I. Submittals:

1. Independent testing agency shall submit written report of each inspection, test or similar service to College Representative and Owner unless Contractor is responsible for service. If Contractor is responsible for service, submit written report of each inspection, test of similar service through Contractor.
2. Each source of topsoil shall be tested with representative submittal samples and at various depths. Soil shall be tested from the source site. There shall be one (1) test from each source site. After delivery to site the soil shall again receive one (1) soil test before final placement. The Owner reserves the right to test delivered materials at Contractor's expense. If any delivered material fails to meet the specifications, the material will be promptly removed from the site at the Contractor's expense. The Contractor shall pay for the testing of any materials not meeting Specifications.

2.2 SOIL ADDITIVES, AND FERTILIZERS

A. Prepared Soil per Soils Report (Note: The following are for bid purposes only. Refer to Agronomic Soils Report for recommendation)

B. Mulch if required for soil amending: Mulch shall be nitrolized, shredded fir, pine or redwood bark. Particle size range shall be 95% from 1.5" to 2". Physical samples shall be submitted to the College Representative for approval.

C. Ammonium Sulfate: Shall be standard brand (NH4)2SO4.

D. Agricultural Gypsum: Gypsum shall be agricultural calcium sulfate CaS04 approved by College Representative. This shall only be used in clay or adobe soils.

E. Urea Formaldehyde: 35 0 0 shall be standard brand, as approved by the College Representative.

F. Vitamin B1 Root Hormone: Hormone shall be Superthrive, Hormex, or equal approved by the College Representative.

G. Nitrolized Fir Bark Fines: Fines shall be "Forest Humus" as sold by Kellogg Company, or equal approved by the College Representative.

H. Commercial Fertilizer: See agronomic soils report.

I. Gromulch: Mulch shall be as manufactured by the Kellogg Co.

2.3 HYDROSEED AND ADDITIVES:

A. Hydroseed Mix per Contract Drawings.

1. Hydro seed available from:

Stover Seeds or approved equal

Attn: Stephen Knutson

Tel No: 213/626-9668, stephen_k@stoverseed.com

2. Hydroseeding Slurry as per Stover Seed Company recommendations: 2000 lbs. / acre EcoFibre mulch, 150 lbs. / acre Environ-mend Binder, 400 lbs. /acre of Starter Fertilizer (15-15-15)

PART 3 - EXECUTION

3.1 SEQUENCE OF THE WORK:

A. Site clearing and stripping of existing vegetation: Refer to Section 02110 Site Clearing.

B. Removal and 85% re-compaction of landscape planting areas as indicated in Construction Documents.

C. Rough grading to approximate finish grade, de-rock upper 8" for rocks and foreign material larger than 1" in size, removal of all underground irrigation systems in upper 12": Refer to Section 02110 Site Clearing.

D. Test soils to verify specified amendments are adequate for existing soil conditions

E. Prep and amend soil, including roto-tilling and fine grading:

F. Test soils to confirm specified amendments have been installed; re-amend as necessary:

3.2 FINE GRADING:

A. Fine Grading: Upon completion of rough and finished grading, perform the required fine grading of planting areas as follows:

1. Before and during preliminary fine grading, dig out and remove all weeds and grasses. Dispose of these and all items listed below off-site at Contractor's expense.
2. Remove all rocks and foreign matter larger than 1/2" in the upper 6" of soil.
3. Do not work the soil when the moisture content is such that excessive compaction will occur, nor when the soil is so dry that clods will not break readily.
4. Apply water, if necessary, to provide ideal density for cross tilling and for planting.
5. Grade so as to anticipate or match the certified finished grades.

a. Remove or redistribute excess soil before the application of fertilizer and mulch.

b. Where the soil is to be replaced by plants and/or mulch, make allowance to prevent deficiency in the depth of mulch when final grading is completed.

B. Grades and Elevations: When soil preparation is completed, including weeding and fertilizing, and the soil has dried so as to be readily worked, fine grading planting areas to elevations shown on Construction Documents.

1. Where grades are not otherwise indicated, provide uniform levels or slopes between points where elevations are given.
2. Make minor adjustments or grade where so requested by College Representative.
3. Provide finished grades which are even, uniform and without abrupt change of surface.
4. Slope soil areas away from structures at 2% gradient minimum to allow natural runoff of water, regrade swale surfaces as required for a minimum 2% run-off, or as indicated on plans. Grade low spots and swales when the soil is at optimum moisture content for working.

3.3 SOIL TESTING, CONDITIONING, AND FERTILIZING

A. Soil Testing: Test hydroseed soil areas every 10,000 square feet. Testing is to be conducted by Wallace Laboratories or approved equal. Wallace Laboratories, 365 Coral Circle, El Segundo CA 90245, Ph. (310) 615-0116, Fax (310)640-6863.

B. Tests will take place 1) for all imported soils at source prior to delivery; 2) for all imported soils upon delivery to the site, but prior to placing in planting areas; 3) all on-site soils tested before soil amending; and 4) all on-site soils after soil amending. Cost for these services will be paid for by the Contractor. Anticipate 3 weeks for completion of each round of testing. Copies of tests shall be submitted to the Owner and the College Representative for their review and approval. Tests shall include the following:

1. Must include pH measurement in the Saturation Extract, Electro conductivity of the saturation extract and Sodium Adsorption Ratio of the saturation extract. The approved procedures are the following:

a.	PH	Method 21
b.	Saturation Extract	Method 2
c.	Sodium Adsorption Ratio	Method 20b

d. Methods of the United States Salinity Laboratory as published in the Agricultural Handbook Number 60 entitled "Diagnosis and Improvement of Saline and Alkali Soils".

2. The following nutrients and elements must be determined with an approved extraction method. Interpretation data must be given citing concentrations which are considered to be low, medium and high: boron, calcium, copper, iron, magnesium, Manganese, molybdenum, phosphorus, potassium, sodium, sulfur, and zinc.
3. The approved methods are those cited by the Council on Soil Testing and Plant Analysis and those methods currently used by soil scientists and agronomists and published in Communications in Soil Science and Plant Analysis, Soil Science and Soil Science Society of America Journal. Approved methods are Mehlich Number 3, Bray PI, Bray P2, Olsen P, DTPA, ammonium acetate, ammonium bicarbonate-DTPA, with hot water extract for boron.
4. The saturated extract must be analyzed for calcium, magnesium, sodium, boron, chloride, nitrate, and sulfate.

5. The following trace metals must be measured by the DTPA extract: Aluminum, arsenic, cadmium, chromium, cobalt, lead, lithium, nickel, selenim, silver, strontium, tin and vanadium.
6. The presence of calcium carbonate and/or magnesium carbonate must be determined by commonly used methods.
7. Soil Texture and Organic Matter content may be estimated or determined by commonly used methods. Interpretation of nutritional deficiencies or excesses and potential toxicities must be given.
8. If required, determine the following by methods approved by the American Society of Agronomy as published in the Methods of Soil Analysis, methods of the United States Salinity Laboratory as published in the Agricultural Handbook Number 60 entitled "Diagnosis and Improvement 0f Saline and AIkali Soils," and bulk density of clods by the method published in Soil Science, vol 155, 325-330 (1993):
    a. Exchangeable Ammonium cation
    b. Base Saturation
    c. Cation Exchange Capacity
    d. Carbonates Determination
    e. Soil Bulk Density (Compaction)
    f. Sand, Silt and Clay determination
    g. Water Infiltration Rate
    h. Elemental determinations to be made according to methods approved by the EPA or by the American Society of Agronomy.
9. Optional - Growth Test for Toxic Constituents and/or Poor Physical Properties Grow a dicot plant species and a monocot species with and without activated charcoal. Measure yield and percent of germination for all treatments. Report conclusions and findings.

C. Tilling: All planting areas shall be rototilled to a minimum depth of 6” below grade. Remove rocks and foreign matter larger than ½” in diameter in the upper 6” of soil. All tilling shall be completed prior to installation of conditioners and fertilizers.

D. Soil amendment mix and quantities shall be per the recommendations from the agronomic soils report.

E. If rodents and vermin are present, control shall be undertaken before planting by a licensed pest control applicator.

3.4 HYDROSEEDING:

A. Time of Year to Seed and Hydroseed: Contractor to verify time of year for seed to be sown according to seed mix supplier specifications.

B. The Contractor must agree to apply the specified seed rate. Contractor must also agree to reseed, re-mulch and repair any areas which fails due to wind, erosion, lack of germination and/or disturbance by the Contractor.

C. Hydroseed shall include application of mulch, binder and seed. Apply binder per seed manufacturer’s recommended rates. Supply water at contractor’s expense if using a fire hydrant source.

D. Apply hydroseed in the form of a slurry consisting of seed and other specified materials.

E. Spray with a visible uniform coat, using the green color of the mulch as a guide. Apply slurry in a downward motion with a fan stream nozzle so that the mulch forms a blotter-like material. Direct the spray operation so that the slurry shall penetrate the soil, thus ensuring maximum impregnation and coverage.

F. All slurry mix which has not been applied within two hours after mixing will be rejected and removed from the work at the Contractor's expense.

G. The nozzle man shall fill out daily worksheets with the following information: seed mix type and amount, mulch type and amount, number of loads used and amount of water, area covered and equipment used, capacity and license number.

H. Do not allow any slurry to be sprayed into any reservoir basin or drainage ditches and channels which may impede free flow of rain or irrigation water. Clean up spilled slurry.

I. After application of hydroseed, wash excess material from previously planted materials and architectural features. Avoid washing or eroding mulch materials.

J. Ensure that application equipment has a built-in agitation system and operating capacity sufficient to agitate, suspend and mix a slurry of not less than forty pounds of fiber mulch plus a combined total of seven pounds of fertilizer solids for each one hundred gallons of water.

K. Slurry distribution lines shall be large enough to prevent stoppage and shall be equipped with a set of hydraulic spray nozzles which shall provide a continuous non-fluctuating discharge. Capacity requirement is minimum 1,500 gallons, mounted on a traveling unit, either self-propelled or drawn by a separate unit which shall place slurry tank within sufficient proximity to areas to be hydromulched.

L. Application rates per Hydro Seed Mix on Contract Drawings.

M. Planting sequence and watering: plant seed in sequence with sprinkler operating patterns. At no time after planting shall seed be subject to drying conditions. Keep seed moist until germination (7 to 12 days). Under heat conditions, plant seeds in early morning or late afternoon. Irrigate newly planted areas at frequency and duration to maintain surface soil moisture without creating areas of inundation or puddling. The contractor shall monitor the site moisture for excessive or insufficient moisture until final acceptance.

N. Re-seeding:

1. All bare spots shall be re-seeded by the contractor within 5 days of the determination of non-germination. The contractor shall determine why the bare areas failed. Items to be checked shall include but not be limited to: drainage, excessive compaction, contamination, Irrigation coverage or unsuitability of the soil. The contractor shall monitor the site for excessive or insufficient site moisture during the re-seeding. The contractor shall be responsible for all re-seeded areas as long after replacement as necessary until an acceptable coverage is realized and approved by the College Representative.

O. Do not hydroseed when weather conditions are unfavorable.

3.5 GRADING:

A. Grade areas to finish grades and dispose of excess soil off the site.

3.6 INSPECTION:

A. Inspection: An inspection shall be made of all planted areas by the Owner's Authorized Representative when the landscape installation is complete. Contractor shall give at least 7 days' notice in advance of the inspection time

END OF SECTION 32 93 20

GENERAL NOTES:

1. WORK SHOWN HEREON SHALL BE DONE IN ACCORDANCE WITH THE "STANDARD SPECIFICATIONS FOR PUBLIC WORKS CONSTRUCTION", LATEST EDITION AND SUPPLEMENTS.
2. ALL GRADING WORK SHALL BE PERFORMED IN ACCORDANCE WITH THE REQUIREMENTS AND RECOMMENDATIONS CONTAINED IN THE GEOTECHNICAL REPORT, "GEOTECHNICAL ENGINEERING REPORT", BY TERRACON CONSULTANTS DATED JUNE 27, 2016 AND ADDENDUM NO. 1 DATED MAY 24, 2017.
3. EXISTING TOPOGRAPHY SHOWN HEREON WAS TAKEN FROM A SURVEY DATED SEPTEMBER 26, 2016 BY PENCO ENGINEERING, INC.
4. THE CONTRACTOR SHALL ASSUME SOLE AND COMPLETE RESPONSIBILITY FOR THE JOB SITE CONDITIONS, INCLUDING SAFETY OF ALL PERSONS AND PROPERTY, DURING THE COURSE OF CONSTRUCTION OF THIS PROJECT. THIS REQUIREMENT SHALL APPLY CONTINUOUSLY, AND SHALL NOT BE LIMITED TO NORMAL WORKING HOURS.
5. PRIOR TO COMMENCING CONSTRUCTION, THE CONTRACTOR SHALL VERIFY ALL JOIN CONDITIONS FOR GRADING, DRAINAGE AND UNDERGROUND FACILITIES INCLUDING LOCATION AND ELEVATION OF EXISTING UNDERGROUND FACILITIES AT CROSSINGS WITH PROPOSED UNDERGROUND FACILITIES. IF CONDITIONS DIFFER FROM THOSE SHOWN ON THE PLANS, THE CONTRACTOR SHALL NOTIFY THE ENGINEER AND SHALL NOT BEGIN CONSTRUCTION UNTIL THE CHANGED CONDITIONS HAVE BEEN EVALUATED.
6. ALL DRAWINGS ARE CONSIDERED TO BE A PART OF THE CONTRACT DOCUMENTS. THE CONTRACTOR SHALL BE RESPONSIBLE FOR THE REVIEW AND COORDINATION OF ALL DRAWINGS AND SPECIFICATIONS PRIOR TO THE START OF CONSTRUCTION. ANY DISCREPANCIES THAT OCCUR SHALL BE BROUGHT TO THE ATTENTION OF THE ARCHITECT PRIOR TO THE START OF CONSTRUCTION SO THAT A CLARIFICATION CAN BE ISSUED. ANY WORK PERFORMED IN CONFLICT WITH THE CONTRACT DOCUMENTS OR ANY CODE REQUIREMENTS SHALL BE CORRECTED BY THE CONTRACTOR AT THEIR OWN EXPENSE AND AT NO EXPENSE TO THE OWNER OR ARCHITECT.
7. THE ENGINEER PREPARING THESE PLANS WILL NOT BE RESPONSIBLE FOR, OR LIABLE FOR, UNAUTHORIZED CHANGES TO OR USES OF THESE PLANS. ALL CHANGES TO THE PLANS MUST BE IN WRITING AND MUST BE APPROVED BY THE PREPARER OF THESE PLANS.
8. NOTES AND DETAILS ON DRAWINGS SHALL TAKE PRECEDENCE OVER GENERAL NOTES AND TYPICAL DETAILS. WHERE NO DETAILS ARE GIVEN, CONSTRUCTION SHALL BE AS SHOWN FOR SIMILAR WORK.
9. THE EXISTENCE, LOCATION AND CHARACTERISTICS OF UNDERGROUND UTILITY INFORMATION SHOWN ON THESE PLANS HAVE BEEN OBTAINED FROM A REVIEW OF AVAILABLE RECORD DATA. NO REPRESENTATION IS MADE AS TO THE ACCURACY OR COMPLETENESS OF SAID UTILITY INFORMATION. THE CONTRACTOR SHALL TAKE PRECAUTIONARY MEASURES TO PROTECT THE UTILITY LINES SHOWN AND ANY OTHER LINES NOT OF RECORD OR NOT SHOWN ON THESE PLANS.
10. IF AT ANY TIME DURING GRADING OPERATIONS, ANY UNFAVORABLE GEOLOGICAL CONDITIONS ARE ENCOUNTERED, GRADING IN THAT AREA WILL STOP UNTIL APPROVED CORRECTIVE MEASURES ARE OBTAINED.
11. THE PROPOSED GRADE IS THE FINAL GRADE AND NOT THE ROUGH GRADE. THE CONTRACTOR SHALL SUBTRACT THE THICKNESS OF THE PAVED SECTION AND/OR LANDSCAPE TOPSOIL SECTION TO ARRIVE AT THE ROUGH GRADE ELEVATION.
12. STRAIGHT GRADE SHALL BE MAINTAINED BETWEEN CONTOUR LINES AND SPOT ELEVATIONS UNLESS OTHERWISE SHOWN ON THE PLANS.
13. ALL DEBRIS AND FOREIGN MATERIAL SHALL BE REMOVED FROM THE SITE AND DISPOSED OF AT APPROVED DISPOSAL SITES. THE CONTRACTOR SHALL OBTAIN NECESSARY PERMITS FOR THE TRANSPORTATION OF MATERIAL TO AND FROM THE SITE.
14. ALL FILL SOILS OR SOILS DISTURBED OR OVEREXCAVATED DURING CONSTRUCTION SHALL BE COMPACTED PER THE REQUIREMENTS OF THE SOILS REPORT BUT NOT LESS THAN 90% MAXIMUM DENSITY AS DETERMINED BY A.S.T.M. SOIL COMPACTION TEST D-1557.
15. THE CONTRACTOR SHALL OBTAIN AN O.S.H.A. PERMIT FROM THE CALIFORNIA DIVISION OF INDUSTRIAL SAFETY PRIOR TO THE CONSTRUCTION OF TRENCHES OR EXCAVATIONS WHICH ARE FIVE FEET OR DEEPER.
16. DIMENSIONS TO PIPELINES ARE TO CENTERLINE UNLESS OTHERWISE NOTED.
17. ALL WATER LINES SHALL BE INSTALLED WITH 36" MINIMUM COVER FROM TOP OF PIPE TO FINISHED GRADE, UNLESS OTHERWISE NOTED.
18. THRUST BLOCKS SHALL BE INSTALLED AT WATERLINE HORIZONTAL AND VERTICAL BENDS, TEES, CAPPED ENDS AND REDUCERS ACCORDING TO THE DETAILS PROVIDED ON THESE PLANS.
19. CONSTRUCTION STAKING FOR IMPROVEMENTS SHOWN ON THESE PLANS SHALL BE PERFORMED BY A LICENSED LAND SURVEYOR.
20. THE CONTRACTOR SHALL REPLACE ALL EXISTING IMPROVEMENTS DAMAGED DURING CONSTRUCTION TO MATCH EXISTING, INCLUDING PERMANENT TRENCH RESURFACING.
21. CONTRACTOR TO CONTACT UNDERGROUND SERVICE ALERT (800-227-2600) PRIOR TO EXCAVATION.
22. ALL DIMENSIONS ARE IN FEET OR DECIMALS THEREOF.
23. ALL CURB DIMENSIONS AND RADII ARE TO PAVEMENT FACE OF CURB.
24. CONTRACTOR TO BE AWARE OF ALL OVERHEAD LINES AT ALL TIMES, SO AS NOT TO DISTURB THEM.
25. WATER SHALL BE PROVIDED ONSITE AND USED TO CONTROL DUST DURING CONSTRUCTION OPERATIONS.
26. CONTRACTOR SHALL OBTAIN ANY NECESSARY PERMITS FROM THE CITY OF SANTA ANA ANY LOCAL UTILITY PURVEYOR REQUIRED FOR ALL WORK WITHIN THE PUBLIC RIGHT-OF-WAY.
27. STORM DRAINAGE SYSTEMS SHOWN ON THESE PLANS HAVE BEEN DESIGNED FOR THE FINAL SITE CONDITION AT COMPLETION OF THE PROJECT. THE CONTRACTOR IS RESPONSIBLE FOR MAINTAINING ADEQUATE DRAINAGE OF THE SITE, DURING INTERIM CONDITIONS OF CONSTRUCTION.
28. CONTRACTOR SHALL OBTAIN ALL REQUIRED PERMITS, INCLUDING NPDES, FROM THE APPROPRIATE JURISDICTIONAL AGENCIES FOR DISCHARGE OF GROUNDWATER THAT MAY BE NECESSARY TO ACCOMPLISH EXCAVATIONS SHOWN ON THESE PLANS.

LEGEND:

GENERAL

- CIVIL LIMITS OF WORK
- SHEET MATCH LINE

ANNOTATION

- 100.00 XX — SURFACE ELEVATION/UTILITY ELEVATION
- (100.00 XX) — EXISTING SURFACE ELEVATION/UTILITY ELEVATION
- XX — CONSTRUCTION NOTE
- 2.0% — FLOW (DIRECTION AND GRADE)
- 2:1 — SLOPE (DIRECTION AND RUN:RISE)
- XX — HORIZONTAL CONTROL POINT LABEL
- CX — CURVE DATA LABEL
- FF=100.00 — PAD/FINISHED FLOOR ELEVATION

SITE

- CURB/BACK OF CURB/GUTTER
- PROPERTY LINE/RIGHT OF WAY
- CENTER LINE
- FENCE
- TO BE DEMOLISHED
- SITE WALL (REFER TO ARCHITECTURAL PLANS FOR DETAILS)
- CONCRETE SEAT WALL (REFER TO LANDSCAPING PLANS FOR DETAILS)

EROSION CONTROL

- SANDBAGS
- FIBER ROLL
- PROPOSED BUILDING EXCAVATION OUTLINE
- EXISTING DRAINAGE DIRECTION OF FLOW
- PROTECT TREE IN PLACE

GRADING

- 100 — PROPOSED MAJOR CONTOUR
- 102 — PROPOSED MINOR CONTOUR
- FLOW LINE
- GB — GRADE BREAK LINE
- R — RIDGE LINE
- EARTHEN SWALE
- SAWCUT
- LIMITS OF GRADING
- GRADING BENCH
- TOP / TOE — GRADED SLOPE (HORIZONTAL:VERTICAL)

UTILITY

- SS — SANITARY SEWER
- W — WATER
- DW — DOMESTIC WATER
- FW — FIRE WATER
- SD — STORM DRAIN
- G — GAS
- E — ELECTRIC
- T — TELEPHONE
- PERFORATED PIPE
- POINT OF CONNECTION
- COORDINATION POINT
- CAP OR PLUG
- UTILITY MANHOLE
- UTILITY CLEANOUT
- STORM DRAIN INLET
- AREA DRAIN/PLANTER DRAIN
- TRENCH DRAIN
- FIRE HYDRANT
- THRUST BLOCK
- FIRE DEPARTMENT CONNECTION (FDC)
- POST INDICATOR VALVE (PIV)
- WATER VALVE
- BACKFLOW ASSEMBLY
- UTILITY METER VAULT

ABBREVIATIONS:

AC	ASPHALTIC CONCRETE	MH	MANHOLE
BCR	BEGIN CURVE RETURN	(N)	NORTH
BW	BACK OF WALK	NTS	NOT TO SCALE
BLDG	BUILDING	PA	PLANTER AREA
BM	BENCH MARK	POC	POINT OF CONNECTION
BOS	BOTTOM OF STAIRS	PIV	POST INDICATOR VALVE
BMP	BEST MANAGEMENT PRACTICES	PCC	POINT OF COMPOUND CURVE
CB	CATCH BASIN	PRC	POINT OF REVERSE CURVE
CI	CAST IRON	PRV	PRESSURE REDUCING VALVE
CL	CENTER LINE	PVC	POLYVINYL CHLORIDE
CMU	CONCRETE MASONRY UNIT	R	RADIUS
CO	CLEANOUT	RCIP	RECTANGULAR CAST IRON PIPE
CONC	PORTLAND CEMENT CONCRETE	RD	ROOF DRAIN
CF	CURB FACE	RW	RIGHT-OF-WAY
DW	DOMESTIC WATER	(S)	SOUTH
(E)	EAST	S=	SLOPE EQUALS
ECR	END CURVE RETURN	SD	STORM DRAIN
EG	EDGE OF GUTTER	SSMH	SANITARY SEWER MANHOLE
EL. OR ELEV	ELEVATION	SS	SANITARY SEWER
ELEC	ELECTRIC, ELECTRICAL	STD	STANDARD
EX. OR EXIST.	EXISTING	SDMH	STORM DRAIN MANHOLE
FDC	FIRE DEPARTMENT CONNECTION	TC	TOP OF CURB
FF	FINISHED FLOOR	TEL	TELEPHONE
FG	FINISHED GRADE (LANDSCAPE)	TG	TOP OF GRATE
FS	FINISHED SURFACE (HARDSCAPE)	TOS	TOP OF STAIRS
FH	FIRE HYDRANT	TW	TOP OF WALL
FL	FLOW LINE	TS	TRAFFIC SIGNAL
FT	FOOT OR FEET	TSB	TRAFFIC SIGNAL BOX
FU	FIXTURE UNITS	TYP	TYPICAL
FW	FIRE WATER	TV	TELEVISION
GPM	GALLONS PER MINUTE	VIF	VERIFY IN FIELD
GV	GATE VALVE	VLT	VAULT
HDPE	HIGH DENSITY POLYETHYLENE	VCP	VITRIFIED CLAY PIPE
HP	HIGH POINT	(W)	WEST
INV.	INVERT	W	WATER
LP	LOW POINT	WM	WATER METER
MAX.	MAXIMUM	WV	WATER VALVE
MIN.	MINIMUM		

PATTERN LEGEND

- CONCRETE PAVING (REFER TO SHEET C5.00 FOR DETAILS)
- VEHICULAR CONCRETE PAVING (REFER TO SHEET C5.00 FOR DETAILS)
- ASPHALT (REFER TO SHEET C5.00 FOR DETAILS)
- LANDSCAPE (REFER TO LANDSCAPING PLANS FOR DETAILS)
- LANDSCAPE (REFER TO LANDSCAPING PLANS FOR DETAILS)
- BRICK PAVERS (REFER TO LANDSCAPING PLANS FOR DETAILS)

BENCHMARK (PER PENCO'S SURVEY):

COUNTY OF ORANGE BENCHMARK NO. SA-318-84

FOUND 3-3/4" OCS ALUMINUM BENCHMARK DISK STAMPED "SA-318-84" SET IN THE SOUTHWEST CORNER OF A 6FT. BY 4FT. CONCRETE CATCH BASIN. MONUMENT IS LOCATED AT THE NORTHEAST CORNER OF THE INTERSECTION OF BRISTOL STREET AND WASHINGTON, 57TH. NORTHERLY OF THE CENTERLINE OF WASHINGTON AND 30FT. EASTERLY OF THE CENTERLINE OF BRISTOL STREET 0.7" SOUTHEASTERLY OF A 24" STEEL STORM DRAIN LID. MONUMENT IS LEVEL WITH SIDEWALK.

ELEVATION = 108.453'
NAVD 88 LEVELED 1992

BASIS OF BEARINGS (PER PENCO'S SURVEY):

FOR THE PURPOSE OF THIS PROJECT, BEARINGS ARE BASED ON ORANGE COUNTY GPS CONTROL NETWORK (NAD88), ZONE 6 20007.00 EPOCH

SHEET INDEX:

CIVIL DRAWINGS	
C0.01	TITLE SHEET
C1.00	SURVEY (FOR REFERENCE ONLY)
C1.01	SURVEY (FOR REFERENCE ONLY)
C1.10	DEMOLITION PLAN
C1.20	EROSION CONTROL PLAN
C1.30	ROUGH GRADING PLAN
C1.31	ROUGH GRADING SECTIONS
C1.32	GRADING PLAN INDEX
C1.33	GRADING PLAN
C1.34	GRADING PLAN
C1.35	GRADING PLAN
C1.40	STORM DRAINAGE PLAN
C1.50	UTILITY PLAN
C1.51	UTILITY PLAN ENLARGEMENT (2)
C1.52	UTILITY SECTIONS
C1.60	PAVING PLAN
C1.70	FIRE HYDRANTS AND ACCESS PLAN
C5.00	CIVIL DETAILS
C5.01	CIVIL DETAILS
C5.02	CIVIL DETAILS

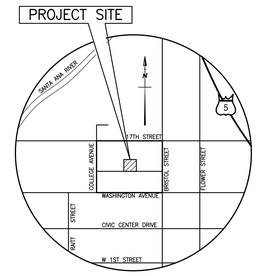

VICINITY MAP
NOT TO SCALE

THIS PLAN HAS BEEN REVIEWED AND CONFORMS TO RECOMMENDATIONS OF SOILS ENGINEERING/GEOLOGICAL REPORT BY TERRACON CONSULTANTS DATED JUNE 27, 2016.

SIGNATURE _____ DATE _____ STAMP

1-800-227-2600
CALL USA/SC FOR UNDERGROUND LOCATING 48 HOURS BEFORE YOU DIG!

IMPORTANT NOTICE
SECTION 4216/4217 OF THE GOVERNMENT CODE REQUIRES A DIGALERT IDENTIFICATION NUMBER BE ISSUED BEFORE A "PERMIT TO EXCAVATE" WILL BE VALID. FOR YOUR DIGALERT I.D. NUMBER CALL UNDERGROUND SERVICE ALERT TOLL FREE 1-800-227-2600 TWO WORKING DAYS BEFORE YOU DIG

hga.
1918 Main Street, Third Floor
Santa Monica, California 90405
Telephone 310.557.7600

STRUCTURAL ENGINEER
SAIFUL BOUQUET
155 N LAKE AVE
PASADENA, CA 91101
626-304-2616

MECHANICAL & PLUMBING ENGINEER
STANTEC CONSULTING INC
14130 RIVERSIDE DR. # 201
SHERMAN OAKS, CA 91423
818-377-8220

ELECTRICAL ENGINEER
FBA ENGINEERING
150 PAULARINO AVE. #A120
COSTA MESA, CA 92626
949-852-9995

CIVIL ENGINEER
KPFF CONSULTING ENGINEERS
700 S. FLOWER ST., #2100
LOS ANGELES, CA 90017
213-418-0201

LANDSCAPE ARCHITECT
LYNN CAPOUYA, INC.
17992 MITCHELL SOUTH, #110
IRVINE, CA 92614
949-756-0150

LABORATORY CONSULTANT
RESEARCH FACILITIES DESIGN
3965 FIFTH AVE. #400
SAN DIEGO, CA 92103
619-297-0159

SCIENCE CENTER
SANTA ANA COLLEGE

RANCHO SANTIAGO COMMUNITY COLLEGE DISTRICT

1530 W. 17TH ST.
SANTA ANA, CA 92706

SANTA ANA COLLEGE

I HEREBY CERTIFY THAT THIS PLAN, SPECIFICATION OR REPORT WAS PREPARED BY ME, OR UNDER MY DIRECT SUPERVISION AND THAT I AM A DULY REGISTERED PROFESSIONAL ENGINEER UNDER THE LAWS OF THE STATE OF CALIFORNIA.

NAME: Reza Feizian
EXPIRATION DATE: 9/30/2017
REGISTRATION NUMBER: C62048

NO	DESCRIPTION	DATE
2	Addendum 2	09/01/17

ISSUANCE HISTORY - THIS SHEET

DRAWN BY: SS | REVIEW BY: SV

HGA NO: 3584-001-00

TITLE SHEET

DATE: JULY 06, 2017

C0.01
ADDENDA PACKAGE

©COPYRIGHT HAMMEL, GREEN AND ABRAHAMSON, INC.

P:\2014\114225 Santa Ana College STEM Project\DWG\SHEET\114225-C0.01GN.dwg, Aug 30, 2017 - 11:00pm

GENERAL DEMOLITION NOTES:

1. CONTRACTOR TO CLEAR PROJECT SITE AREA WITHIN THE CONFINES OF THE DEMOLITION LIMIT LINE. THE CONTRACTOR SHALL DEMOLISH AND REMOVE FROM THE SITE ALL EXISTING UTILITIES, STRUCTURES, PLANTERS, TREES, AND ALL OTHER SITE FEATURES, UNLESS OTHERWISE NOTED ON THE PLAN.
2. REMOVAL OF LANDSCAPING SHALL INCLUDE ROOTS AND ORGANIC MATERIALS.
3. THE CONTRACTOR SHALL BE RESPONSIBLE FOR OBTAINING ANY AND ALL PERMITS AND SHALL PAY ALL FEES NECESSARY FOR ENCROACHMENT, GRADING, DEMOLITION AND DISPOSAL OF SAID MATERIALS AS REQUIRED BY PRIVATE, LOCAL AND STATE JURISDICTIONS.
4. THE CONTRACTOR SHALL BE RESPONSIBLE FOR A SITE INSPECTION TO FULLY ACKNOWLEDGE THE EXTENT OF THE DEMOLITION WORK.
5. THE CONTRACTOR SHALL VERIFY AND LOCATE ALL EXISTING ABOVE AND UNDERGROUND UTILITIES. LOCATIONS SHOWN ON THE PLANS ARE APPROXIMATE AND ARE SHOWN FOR GENERAL INFORMATION ONLY.
6. DAMAGE TO ANY EXISTING UTILITIES AND SERVICES TO REMAIN SHALL BE THE RESPONSIBILITY OF THE CONTRACTOR. CONTRACTOR SHALL REPAIR AND/OR REPLACE IN KIND. VERIFY EXISTING UTILITIES PRIOR TO CUT AND CAP PER PLAN. NOTIFY CIVIL ENGINEER IF ANY DISCREPANCIES ARE DISCOVERED IN FIELD. (2)
7. EROSION CONTROL MEASURES SHALL BE IMPLEMENTED TO PREVENT DEBRIS AND UNSUITABLE MATERIALS FROM ENTERING STORM DRAINS, SANITARY SEWERS AND STREETS.
8. DUST CONTROL SHALL BE IMPLEMENTED DURING DEMOLITION.
9. DEMOLITION IS LIMITED TO WITHIN DEMOLITION LIMIT LINE UNLESS NOTED OTHERWISE.
10. THE CONTRACTOR SHALL VERIFY THE LOCATION AND QUANTITY OF EXISTING SURFACE STRUCTURES AND SHALL BE SOLELY RESPONSIBLE FOR ANY UNIDENTIFIED UTILITIES, IMPROVEMENTS, TREES, ETC. TO BE DEMOLISHED AND REMOVED WITHIN THE DEMOLITION LIMIT LINE, INCLUDING APPURTENANT FOUNDATIONS OR SUPPORTS.
11. DEMOLITION CALLOUTS IN THIS SECTION ARE REPRESENTATIVE OF WHAT IS TO BE DONE, NOT AN ITEMIZED ACCOUNTING FOR EACH PIPE, CATCH BASIN, MANHOLE, VAULT, ETC. THAT IS TO BE DEMOLISHED, REMOVED AND DISPOSED OF.

DEMOLITION NOTES:

PROTECT–IN–PLACE

1. PROTECT IN PLACE EXISTING BUILDING AND BUILDING FOOTINGS.
2. PROTECT IN PLACE EXISTING CONCRETE V–GUTTER.
3. PROTECT–IN–PLACE EXISTING WATER LINE.
4. PROTECT–IN–PLACE EXISTING SEWER LINE.
5. PROTECT–IN–PLACE EXISTING GAS LINE.
6. PROTECT–IN–PLACE EXISTING ELECTRICAL LINE.
7. PROTECT–IN–PLACE EXISTING CHILLED WATER LINE.
8. PROTECT–IN–PLACE EXISTING AC PAVEMENT.
9. PROTECT–IN–PLACE EXISTING ELECTRICAL VAULT.
10. PROTECT–IN–PLACE EXISTING CONCRETE PAVEMENT.
11. PROTECT–IN–PLACE EXISTING CONCRETE CURB.
12. PROTECT–IN–PLACE EXISTING CONCRETE CURB AND GUTTER.
13. PROTECT–IN–PLACE EXISTING STORM DRAIN LINE.
14. PROTECT–IN–PLACE EXISTING TELECOM LINE.
15. PROTECT–IN–PLACE EXISTING SITE LIGHT.
16. PROTECT–IN–PLACE EXISTING STORM DRAIN INLET.
17. PROTECT–IN–PLACE EXISTING TREE.
18. PROTECT–IN–PLACE EXISTING UTILITY YARD BOX.
19. PROTECT–IN–PLACE EXISTING OIL SWITCH.

REMOVE & DEMOLISH

1. REMOVE EXISTING BUILDING. REFER TO GEOTECH REPORT FOR DETAILS FOR REMOVAL OF EXISTING BUILDING FOOTINGS.
2. REMOVE AND DEMOLISH EXISTING CONCRETE PAVEMENT.
3. REMOVE AND DEMOLISH EXISTING AC PAVEMENT.
4. REMOVE AND DEMOLISH EXISTING TREE.
5. REMOVE AND DEMOLISH EXISTING 8FT SITE WALL.
6. REMOVE AND DEMOLISH EXISTING GATE.
7. REMOVE AND DEMOLISH EXISTING CURB.
8. REMOVE AND DEMOLISH EXISTING SITE LIGHT.COORDINATE WITH ELECTRICAL DEMO PLAN.
9. REMOVE AND DEMOLISH EXISTING SIGN.
10. REMOVE AND DEMOLISH EXISTING CURB AND GUTTER.
11. REMOVE AND DEMOLISH EXISTING CURB RAMP.
12. REMOVE AND DEMOLISH EXISTING GAS LINE.
13. REMOVE AND DEMOLISH EXISTING ELECTRICAL LINE. COORDINATE WITH ELECTRICAL DEMO PLAN.
14. REMOVE AND DEMOLISH EXISTING ELECTRICAL STRUCTURE.COORDINATE WITH ELECTRICAL DEMO PLAN.
15. REMOVE AND DEMOLISH EXISTING TELECOM LINE.
16. REMOVE AND DEMOLISH EXISTING WATER LINE.
17. REMOVE AND DEMOLISH EXISTING WATER TAP.
18. REMOVE AND DEMOLISH EXISTING WATER VALVE.
19. REMOVE AND DEMOLISH EXISTING ELECTRICAL VAULT.COORDINATE WITH ELECTRICAL DEMO PLAN.
20. REMOVE AND DEMOLISH EXISTING STORM DRAIN LINE.
21. REMOVE AND DEMOLISH EXISTING AREA DRAIN.
22. REMOVE AND DEMOLISH EXISTING SEWER LINE.
23. REMOVE AND DEMOLISH EXISTING SEWER CLEAN OUT.
24. REMOVE AND DEMOLISH EXISTING GAS VALVE.
25. REMOVE AND DEMOLISH EXISTING GATE.
26. REMOVE AND DEMOLISH EXISTING FENCE.
27. REMOVE AND DEMOLISH EXISTING TRASH CAN.
28. RELOCATE EXISTING FIRE HYDRANT.

LEGEND:

LIMIT LINE OF WORK

CUT AND CAP

UTILITIES TO BE DEMOLISHED

EXISTING UTILITIES NOTE:

EXISTING UNDERGROUND UTILITIES ARE SHOWN BASED ON AVAILABLE RECORD AND AS–BUILT DRAWINGS. THE CONTRACTOR IS REQUIRED TO TAKE ALL PRECAUTIONARY MEASURES TO LOCATE EXISTING UTILITIES PRIOR TO CONSTRUCTION AND PROTECT THE UTILITIES SHOWN AND ANY OTHER UTILITIES NOT SHOWN ON THIS PLAN.

NOTE TO CONTRACTOR:

CONTRACTOR SHALL COORDINATE WITH THE OWNER PRIOR TO DEMOTION AND REMOVAL OF EXISTING UTILITIES AND ITS APPURTENANT STRUCTURES TO ENSURE THAT UTILITY SERVICES TO THE ADJACENT/SURROUNDING EXISTING BUILDINGS ARE NOT INTERRUPTED.

SCALE: 1"=20'

HGA
1918 Main Street, Third Floor
Santa Monica , California 90405
Telephone 310.557.7600

STRUCTURAL ENGINEER
SAIFUL BOUQUET
155 N LAKE AVE
PASADENA, CA 91101
626-304-2616

MECHANICAL & PLUMBING ENGINEER
STANTEC CONSULTING INC
14130 RIVERSIDE DR. # 201
SHERMAN OAKS, CA 91423
818-377-8220

ELECTRICAL ENGINEER
FBA ENGINEERING
150 PAULARINO AVE. #A120
COSTA MESA, CA 92626
949-852-9995

CIVIL ENGINEER
KPFF CONSULTING ENGINEERS
700 S. FLOWER ST., #2100
LOS ANGELES, CA 90017
213-418-0201

LANDSCAPE ARCHITECT
LYNN CAPOUYA, INC.
17992 MITCHELL SOUTH, #110
IRVINE, CA 92614
949-756-0150

LABORATORY CONSULTANT
RESEARCH FACILITIES DESIGN
3965 FIFTH AVE. #400
SAN DIEGO, CA 92103
619-297-0159

SCIENCE CENTER
SANTA ANA COLLEGE

RANCHO SANTIAGO COMMUNITY COLLEGE DISTRICT

1530 W. 17TH ST.
SANTA ANA, CA 92706

SANTA ANA COLLEGE

I HEREBY CERTIFY THAT THIS PLAN, SPECIFICATION OR REPORT WAS PREPARED BY ME, OR UNDER MY DIRECT SUPERVISION AND THAT I AM A DULY REGISTERED ARCHITECT/ENGINEER UNDER THE LAWS OF THE STATE OF CALIFORNIA.

NAME: Reza Feizian
EXPIRATION DATE: 9/30/2017
REGISTRATION NUMBER: C62048

NO	DESCRIPTION	DATE
2	Addendum 2	09/01/17

ISSUANCE HISTORY - THIS SHEET

DRAWN BY: SS | REVIEW BY: SV

HGA NO: 3584-001-00

DEMOLITION PLAN

DATE: JULY 06, 2017

C1.10

ADDENDA PACKAGE

©COPYRIGHT HAMMEL, GREEN AND ABRAHAMSON, INC.

P:\2014\114225 Santa Ana College STEM Project\DWG\SHEET\114225-C1.10XD.dwg, Aug 30, 2017 - 11:01pm

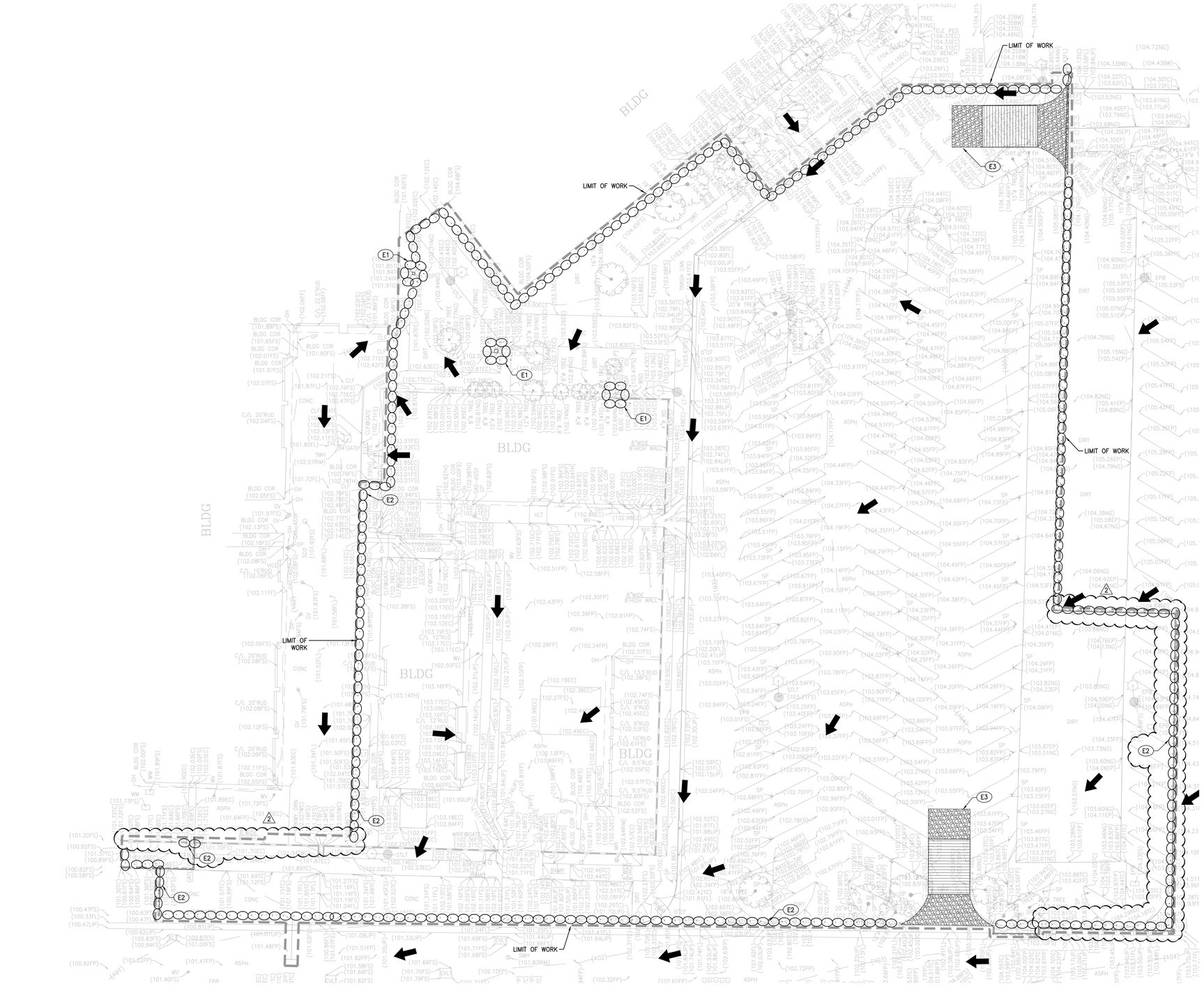

BMP NOTES:

THE FOLLOWING BMPS AS OUTLINED IN, BUT NOT LIMITED TO, THE BEST MANAGEMENT PRACTICE HANDBOOK, CALIFORNIA STORMWATER QUALITY TASK FORCE, SACRAMENTO, CALIFORNIA, JULY 2012, MAY APPLY DURING THE CONSTRUCTION OF THIS PROJECT (ADDITIONAL MEASURES MAY BE REQUIRED IF DEEMED APPROPRIATE BY CITY INSPECTORS):

EROSION CONTROL

EC1–SCHEDULING
EC2–PRESERVATION OF EXISTING VEGETATION
EC3–HYDRAULIC MULCH
EC4–HYDROSEEDING
EC5–SOIL BINDERS
EC6–STRAW MULCH
EC7–GEOTEXTILES AND MATS
EC8–WOOD MULCHING
EC9–EARTH DIKES AND DRAINAGE SWALES
EC10–VELOCITY DISSIPATION DEVICES
EC11–SLOPE DRAINS
EC12–STREAMBANK STABILIZATION
EC13–RESERVED
EC14–COMPOST BLANKET
EC15–SOIL PREPARATION/ROUGHENING
EC16–NON–VEGETATIVE STABILIZATION

TEMPORARY SEDIMENT CONTROL

SE1–SILT FENCE
SE2–SEDIMENT BASIN
SE3–SEDIMENT TRAP
SE4–CHECK DAM
SE5–FIBER ROLLS
SE6–GRAVEL BAG BERM
SE7–STREET SWEEPING AND VACUUMING
SE8–SANDBAG BARRIER
SE9–STRAW BALE BARRIER
SE10–STORM DRAIN INLET PROTECTION
SE11–ACTIVE TREATMENT SYSTEMS
SE12–MANUFACTURED LINEAR SEDIMENT CONTROLS
SE13–COMPOST SOCKS AND BERMS
SE14–BIOFILTER BAGS

EQUIPMENT TRACKING CONTROL

TC1–STABILIZED CONSTRUCTION ENTRANCE/EXIT
TC2–STABILIZED CONSTRUCTION ROADWAY
TC3–ENTRANCE/OUTLET TIRE WASH

WIND EROSION CONTROL

WE1–WIND EROSION CONTROL

NON–STORMWATER MANAGEMENT

NS1–WATER CONSERVATION PRACTICES
NS2–DEWATERING OPERATIONS
NS3–PAVING AND GRINDING OPERATIONS
NS4–TEMPORARY STREAM CROSSING
NS5–CLEAR WATER DIVERSION
NS6–ILLICIT CONNECTION/DISCHARGE
NS7–POTABLE WATER/IRRIGATION
NS8–VEHICLE AND EQUIPMENT CLEANING
NS9–VEHICLE AND EQUIPMENT FUELING
NS10–VEHICLE AND EQUIPMENT MAINTENANCE
NS11–PILE DRIVING OPERATIONS
NS12–CONCRETE CURING
NS13–CONCRETE FINISHING
NS14–MATERIAL OVER WATER
NS15–DEMOLITION ADJACENT TO WATER
NS16–TEMPORARY BATCH PLANTS

WASTE MANAGEMENT & MATERIALS POLLUTION CONTROL

WM1–MATERIAL DELIVERY AND STORAGE
WM2–MATERIAL USE
WM3–STOCKPILE MANAGEMENT
WM4–SPILL PREVENTION AND CONTROL
WM5–SOLID WASTE MANAGEMENT
WM6–HAZARDOUS WASTE MANAGEMENT
WM7–CONTAMINATED SOIL MANAGEMENT
WM8–CONCRETE WASTE MANAGEMENT
WM9–SANITARY/SEPTIC WASTE MANAGEMENT
WM10–LIQUID WASTE MANAGEMENT

EROSION CONTROL NOTES:

1. TEMPORARY EROSION CONTROL DEVICES SHOWN ON THE GRADING PLAN WHICH INTERFERE WITH THE WORK SHALL BE RELOCATED OR MODIFIED AS AND WHEN THE INSPECTOR SO DIRECTS AS THE WORK PROGRESSES TO MEET "AS GRADED" CONDITIONS.
2. ALL LOOSE SOIL AND DEBRIS SHALL BE REMOVED FROM THE STREET AREAS UPON STARTING OPERATIONS AND PERIODICALLY THEREAFTER AS DIRECTED BY THE INSPECTOR
3. WHEN THE INSPECTOR SO DIRECTS, A 12–INCH BERM SHALL BE MAINTAINED ALONG THE TOP OF THE SLOPE OF THOSE FILLS ON WHICH GRADING IS NOT IN PROGRESS.
4. STORM AND SEWER DRAIN TRENCHES THAT ARE CUT THROUGH BASIN DIKES OR BASIN INLET DIKES SHALL BE PLUGGED WITH SANDBAGS.
5. EXCEPT WHEN THE INSPECTOR DIRECTS OTHERWISE, ALL DEVICES SHOWN SHALL BE IN PLACE AT THE END OF EACH WORKING DAY WHEN RAIN IS FORECAST, AND SHALL BE MAINTAINED DURING THE RAINY SEASON (OCTOBER 15 TO APRIL 15).
6. SANDBAGS SHALL BE STOCKPILED ON SITE, READY TO BE PLACED IN POSITION WHEN RAIN IS FORECAST, OR WHEN THE INSPECTOR SO DIRECTS.
7. A "STANDBY EMERGENCY CREW" SHALL BE ALERTED BY THE PERMITTEE OR THE CONTRACTOR TO PERFORM EMERGENCY WORK DURING RAINSTORMS. THE PARTY TO BE CONTACTED IS:
   NAME: _____ (TO BE FILLED IN BY CONTRACTOR)
   PHONE NUMBER: _____

DUST CONTROL NOTES:

1. DUST SHALL BE CONTROLLED BY WATERING AND/OR APPLYING A DUST PALLIATIVE. THE DUST PALLIATIVE SHALL BE APPLIED IN THE AMOUNT AT THE LOCATIONS AS DIRECTED BY THE ENGINEER.
2. WATER FOR DUST CONTROL SHALL BE APPLIED BY MEANS OF PRESSURE TYPE DISTRIBUTORS OR PIPE LINES EQUIPPED WITH A SPRAY SYSTEM OR HOSES WITH NOZZLES THAT WILL INSURE A UNIFORM APPLICATION OF WATER.
3. UNLESS WATER IS APPLIED BY MEANS OF PIPE LINES, AT LEAST ONE MOBILE UNIT WITH A MINIMUM CAPACITY OF 100 GALLONS SHALL BE AVAILABLE FOR APPLYING WATER.
4. ALL SOIL MATERIALS OR DEBRIS TRUCKED FROM THE SITE SHALL BE COVERED AND SPRINKLED PRIOR TO ENTERING PUBLIC STREETS.
5. PROVIDE FOR WET SUPPRESSION OR CHEMICAL STABILIZING OF EXPOSED SOILS.
6. PROVIDE FOR RAPID CLEAN–UP OF SEDIMENTS DEPOSITED ON THE PAVED ROADS.
7. LIMIT THE AMOUNT OF AREAS DISTURBED BY CLEARING & EARTH MOVING OPERATIONS BY SCHEDULING THESE ACTIVITIES IN PHASES.

EROSION CONTROL NOTES:

(E1) PROVIDE INLET PROTECTION PER DETAIL 1, HEREON.
(E2) PLACE SANDBAGS TRIPLE ROW PER DETAIL 2, HEREON.
(E3) STABILIZED CONSTRUCTION ENTRANCE PER DETAIL 3, HEREON.

LEGEND

LIMIT LINE OF WORK
SANDBAGS

hga.
1918 Main Street, Third Floor
Santa Monica, California 90405
Telephone 310.557.7600

STRUCTURAL ENGINEER
SAIFUL BOUQUET
155 N LAKE AVE
PASADENA, CA 91101
626-304-2616

MECHANICAL & PLUMBING ENGINEER
STANTEC CONSULTING INC
14130 RIVERSIDE DR. # 201
SHERMAN OAKS, CA 91423
818-377-8220

ELECTRICAL ENGINEER
FBA ENGINEERING
150 PAULARINO AVE. #A120
COSTA MESA, CA 92626
949-852-9995

CIVIL ENGINEER
KPFF CONSULTING ENGINEERS
700 S. FLOWER ST., #2100
LOS ANGELES, CA 90017
213-418-0201

LANDSCAPE ARCHITECT
LYNN CAPOUYA, INC.
17992 MITCHELL SOUTH, #110
IRVINE, CA 92614
949-756-0150

LABORATORY CONSULTANT
RESEARCH FACILITIES DESIGN
3965 FIFTH AVE. #400
SAN DIEGO, CA 92103
619-297-0159

SCIENCE CENTER
SANTA ANA COLLEGE

RANCHO SANTIAGO COMMUNITY COLLEGE DISTRICT

1530 W. 17TH ST.
SANTA ANA, CA 92706

SANTA ANA COLLEGE

I HEREBY CERTIFY THAT THIS PLAN, SPECIFICATION OR REPORT WAS PREPARED BY ME, OR UNDER MY DIRECT SUPERVISION AND I AM A DULY LICENSED PROFESSIONAL ENGINEER UNDER THE LAWS OF THE STATE OF CALIFORNIA.

NAME: Feiza Feizian
EXPIRATION DATE: 9/30/2017
REGISTRATION NUMBER: C62048

NO	DESCRIPTION	DATE
2	Addendum 2	09/01/17

ISSUANCE HISTORY - THIS SHEET

DRAWN BY: SS | REVIEW BY: SV

HGA NO: 3584-001-00

EROSION CONTROL PLAN

DATE: JULY 06, 2017

C1.20

ADDENDA PACKAGE

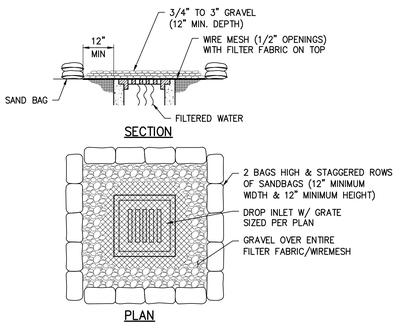

1 HEREON — STORM DRAIN INLET PROTECTION
N.T.S.

NOTES:

1. PLACE WIRE MESH OVER AND 1' (MINIMUM) BEYOND THE INLET STRUCTURE. (MESH OPENINGS NOT TO EXCEED 1/2" x 1/2" WIRE)
2. PLACE FILTER FABRIC OVER WIRE MESH.
3. PLACE 3/4" TO 3" GRAVEL OVER THE FILTER FABRIC/WIRE MESH (12" MINIMUM DEPTH OVER THE ENTIRE INLET OPENING).
4. SAND BAG MATERIAL: POLYPROPYLENE, POLYETHYLENE OR POLYAMIDE WOVEN FABRIC, MINIMUM UNIT WEIGHT 4 OUNCES PER SQUARE YARD, MULLEN BURST STRENGTH EXCEEDING 300 PSI AND ULTRAVIOLET STABILITY EXCEEDING 70%.
5. SAND BAG SHALL BE FILLED WITH NON–COHESIVE, CLASS 1 OR CLASS 2 PERMEABLE MATERIAL FREE FROM CLAY AND DELETERIOUS MATERIAL.
6. PLACE SEVERAL LAYERS OF SAND BAGS (12" MINIMUM HIGH) OVERLAPPING THE BAGS AND PACKING THEM TIGHTLY TOGETHER.
7. LEAVE GAP OF ONE BAG ON THE TOP ROW TO SERVE AS A SPILLWAY.

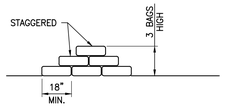

2 HEREON — SANDBAG BARRIER
N.T.S.

NOTES:

1. SANDBAG SHALL BE FILLED WITH NON–COHESIVE, CLASS 1 OR CLASS 2, PERMEABLE MATERIAL FREE FROM CLAY AND DELETERIOUS MATERIAL.

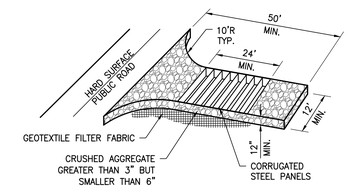

3 HEREON — STABILIZED CONSTRUCTION ENTRANCE
N.T.S.

NOTES:

1. THE CONSTRUCTION ENTRANCE ROADWAYS SHALL BE STABILIZED SO AS TO PREVENT SEDIMENTS FROM BEING DEPOSITED INTO THE PUBLIC ROADS. DEPOSITIONS MUST BE SWEPT UP IMMEDIATELY AND MAY NOT BE WASHED DOWN BY RAIN OR OTHER MEANS INTO THE STORM DRAIN SYSTEM.
2. STABILIZED CONSTRUCTION ENTRANCE SHALL BE:
   A. LOCATED AT ANY POINT WHERE TRAFFIC WILL BE ENTERING OR LEAVING A CONSTRUCTION SITE OR FROM A PUBLIC RIGHT OF WAY, STREET, ALLEY, AND SIDEWALK OR PARKING AREA.
   B. SERIES OF STEEL PLATES WITH "RUMBLE STRIPS", AND/OR MIN 3" COARSE AGGREGATE WITH LENGTH, WIDTH AND THICKNESS AS NEEDED TO ADEQUATELY PREVENT ANY TRACKING ONTO PAVED SURFACE.
3. ADDING A WASH RACK WITH SEDIMENT TRAP LARGE ENOUGH TO COLLECT ALL WASH WATER CAN GREATLY IMPROVE EFFICIENCY.
4. ALL VEHICLES ACCESSING THE CONSTRUCTION SITE SHALL UTILIZE THE STABILIZED CONSTRUCTION ENTRANCE.

N
0 10' 20'
SCALE: 1"=20'

©COPYRIGHT HAMMEL, GREEN AND ABRAHAMSON, INC.

P:\2014\14225 Santa Ana College STEM Project\DWG\SHEET\14225-C1.20EC.dwg, Aug 30, 2017 - 11:02pm

EARTHWORK QUANTITIES – FOR SITE AREA (NOT INCLUDING BUILDING PADS) ONLY

CUT: (ALL EXPANSIVE SOILS SHALL BE EXPORTED)	**778** CUBIC YARDS
FILL:	**2,287** CUBIC YARDS
NET (IMPORT):	**1,509** CUBIC YARDS

NOTES:

1. THE ESTIMATED QUANTITIES PROVIDED ABOVE ARE TO BE USED FOR JURISDICTIONAL PLAN CHECKING AND PERMITTING PURPOSES ONLY.
2. ESTIMATED EARTHWORK ABOVE IS BASED ON DESIGN FINISH GRADES TO EXISTING GRADES AND/OR CONTOURS AS PROVIDED ON THE BASE SURVEY. THE ESTIMATED EARTHWORK DOES NOT ACCOUNT FOR THE THICKNESS OF PAVEMENTS, FOUNDATIONS AND SLABS ON GRADE, FOOTINGS, CLEARING AND GRUBBING, OVER EXCAVATION AND RECOMPACTION, AND CONSTRUCTION MEANS AND METHODS.
3. THE ESTIMATED EARTHWORK QUANTITIES DO NOT INCLUDE SHRINKAGE AND/OR EXPANSION FACTORS DUE TO COMPACTION OR OVER EXCAVATION QUANTITIES.
4. THE CONTRACTOR SHALL CALCULATE HIS OWN EARTHWORK QUANTITIES NECESSARY FOR HIS BID AND WORK.
5. ESTIMATED EARTHWORK QUANTITIES ABOVE ASSUME THAT ALL ONSITE MATERIALS ARE SUITABLE FOR BACKFILLING. HOWEVER, ACTUAL EXISTING ONSITE MATERIALS AND IMPORTED MATERIALS MUST FIRST BE APPROVED BY THE GEOTECHNICAL ENGINEER PRIOR TO INSTALLATION, REMOVAL, OR REPLACEMENT.

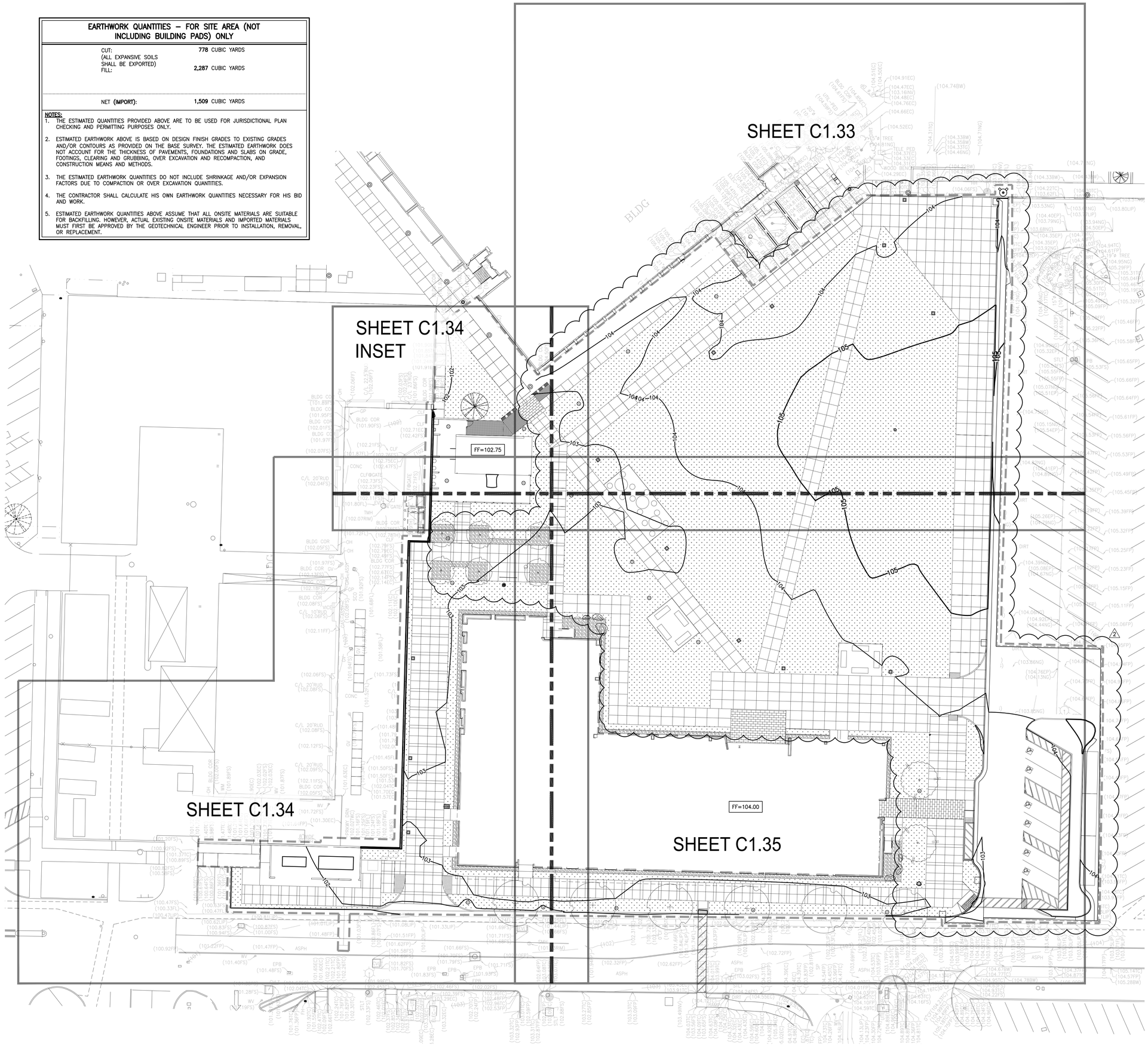

LEGEND

LIMIT LINE OF WORK

hga.
1918 Main Street, Third Floor
Santa Monica , California 90405
Telephone 310.557.7600

STRUCTURAL ENGINEER
SAIFUL BOUQUET
155 N LAKE AVE
PASADENA, CA 91101
626-304-2616

MECHANICAL & PLUMBING ENGINEER
STANTEC CONSULTING INC
14130 RIVERSIDE DR. # 201
SHERMAN OAKS, CA 91423
818-377-8220

ELECTRICAL ENGINEER
FBA ENGINEERING
150 PAULARINO AVE. #A120
COSTA MESA, CA 92626
949-852-9995

CIVIL ENGINEER
KPFF CONSULTING ENGINEERS
700 S. FLOWER ST., #2100
LOS ANGELES, CA 90017
213-418-0201

LANDSCAPE ARCHITECT
LYNN CAPOUYA, INC.
17992 MITCHELL SOUTH, #110
IRVINE, CA 92614
949-756-0150

LABORATORY CONSULTANT
RESEARCH FACILITIES DESIGN
3965 FIFTH AVE. #400
SAN DIEGO, CA 92103
619-297-0159

SCIENCE CENTER
SANTA ANA COLLEGE

RANCHO SANTIAGO COMMUNITY COLLEGE DISTRICT

1530 W. 17TH ST.
SANTA ANA, CA 92706

SANTA ANA COLLEGE

I HEREBY CERTIFY THAT THIS PLAN, SPECIFICATION OR REPORT WAS PREPARED BY ME, OR UNDER MY DIRECT SUPERVISION AND THAT I AM A DULY LICENSED PROFESSIONAL ENGINEER UNDER THE LAWS OF THE STATE OF CALIFORNIA.

NAME: Reza Rezaian
EXPIRATION DATE: 9/30/2017
REGISTRATION NUMBER: C62048

NO	DESCRIPTION	DATE
2	Addendum 2	09/01/17

ISSUANCE HISTORY - THIS SHEET

DRAWN BY: SS | REVIEW BY: SV

HGA NO: 3584-001-00

GRADING PLAN INDEX

DATE: JULY 06, 2017

C1.32

ADDENDA PACKAGE

SCALE: 1"=20'

©COPYRIGHT HAMMEL, GREEN AND ABRAHAMSON, INC.

P:\2014\114225 Santa Ana College STEM Project\DWG\SHEET\114225-C1.32GP.dwg, Aug 30, 2017 - 11:03pm

LEGEND

LIMIT LINE OF WORK

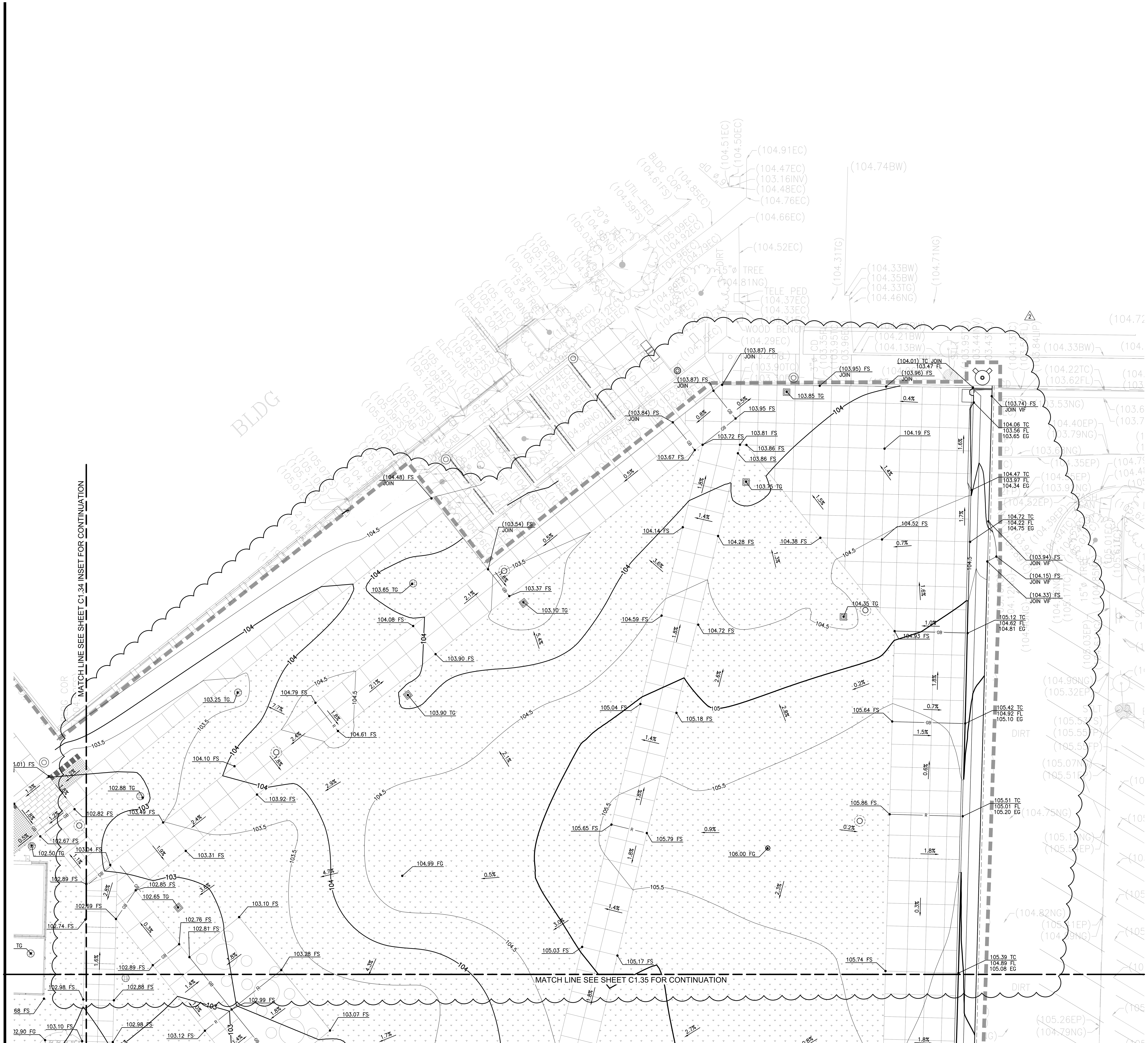

HGA.
1918 Main Street, Third Floor
Santa Monica, California 90405
Telephone 310.557.7600

STRUCTURAL ENGINEER
SAIFUL BOUQUET
155 N LAKE AVE
PASADENA, CA 91101
626-304-2616

MECHANICAL & PLUMBING ENGINEER
STANTEC CONSULTING INC
14130 RIVERSIDE DR. # 201
SHERMAN OAKS, CA 91423
818-377-8220

ELECTRICAL ENGINEER
FBA ENGINEERING
150 PAULARINO AVE. #A120
COSTA MESA, CA 92626
949-852-9995

CIVIL ENGINEER
KPFF CONSULTING ENGINEERS
700 S. FLOWER ST., #2100
LOS ANGELES, CA 90017
213-418-0201

LANDSCAPE ARCHITECT
LYNN CAPOUYA, INC.
17992 MITCHELL SOUTH, #110
IRVINE, CA 92614
949-756-0150

LABORATORY CONSULTANT
RESEARCH FACILITIES DESIGN
3965 FIFTH AVE. #400
SAN DIEGO, CA 92103
619-297-0159

SCIENCE CENTER

SANTA ANA COLLEGE

RANCHO SANTIAGO COMMUNITY COLLEGE DISTRICT

1530 W. 17TH ST.
SANTA ANA, CA 92706

SANTA ANA COLLEGE

I HEREBY CERTIFY THAT THIS PLAN, SPECIFICATION OR REPORT WAS PREPARED BY ME OR UNDER MY DIRECT SUPERVISION AND THAT I AM A DULY LICENSED PROFESSIONAL ENGINEER UNDER THE LAWS OF THE STATE OF CALIFORNIA.

NAME: Reza Rezaian
EXPIRATION DATE: 9/30/2017
REGISTRATION NUMBER: C62048

NO	DESCRIPTION	DATE
2	Addendum 2	09/01/17

ISSUANCE HISTORY - THIS SHEET

DRAWN BY: SS | REVIEW BY: BV

HGA NO: 3584-001-00

GRADING PLAN

DATE: JULY 06, 2017

N

0 5' 10'
SCALE: 1"=10'

C1.33

ADDENDA PACKAGE

©COPYRIGHT HAMMEL, GREEN AND ABRAHAMSON, INC.

P:\2014\114225 Santa Ana College STEM Project\DWG\SHEET\114225-C1.33-1.35GP.dwg, Aug 30, 2017 - 11:04pm

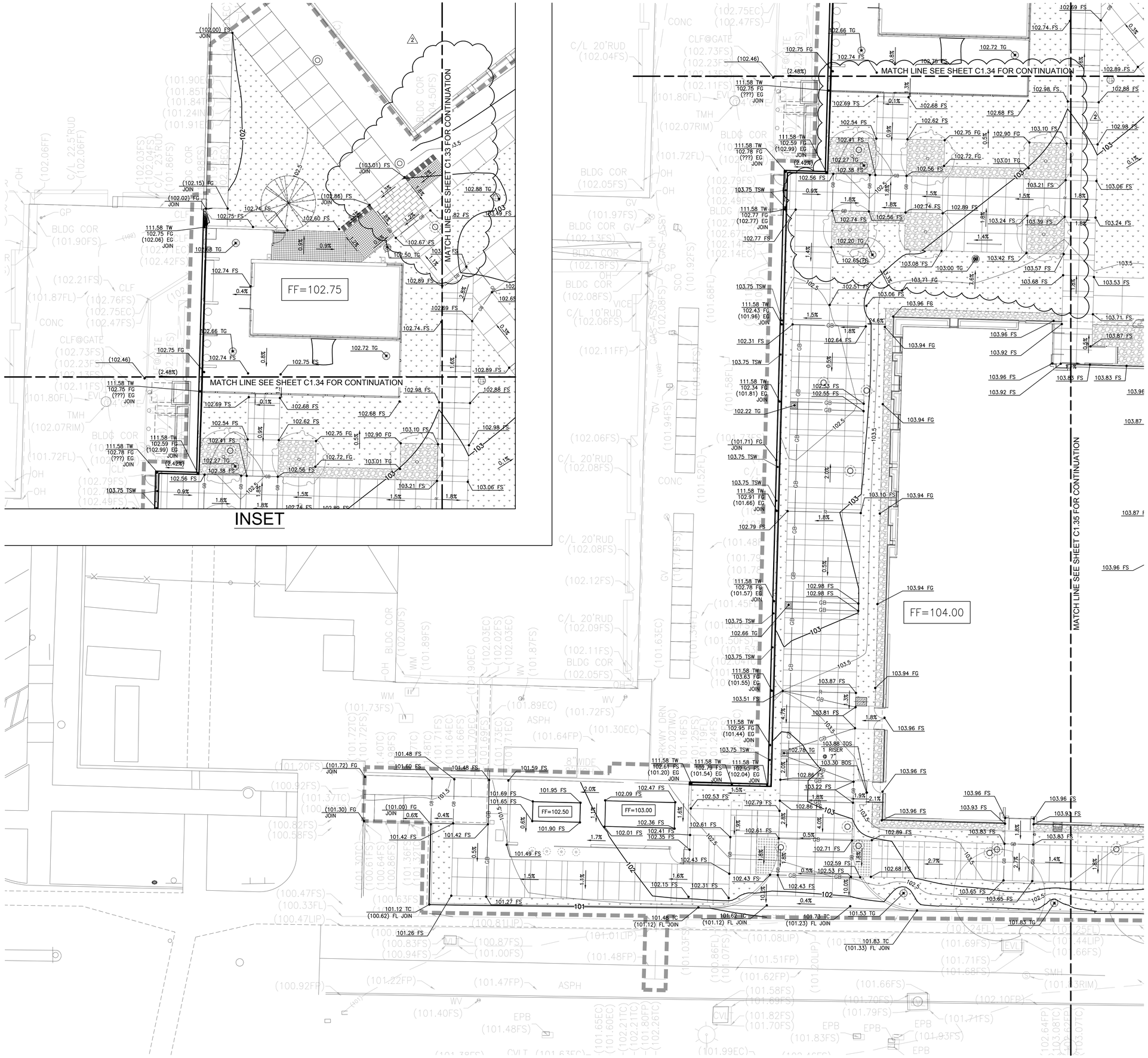

LEGEND

LIMIT LINE OF WORK

hga.
1918 Main Street, Third Floor
Santa Monica , California 90405
Telephone 310.557.7600

STRUCTURAL ENGINEER
SAIFUL BOUQUET
155 N LAKE AVE
PASADENA, CA 91101
626-304-2616

MECHANICAL & PLUMBING ENGINEER
STANTEC CONSULTING INC
14130 RIVERSIDE DR. # 201
SHERMAN OAKS, CA 91423
818-377-8220

ELECTRICAL ENGINEER
FBA ENGINEERING
150 PAULARINO AVE. #A120
COSTA MESA, CA 92626
949-852-9995

CIVIL ENGINEER
KPFF CONSULTING ENGINEERS
700 S. FLOWER ST., #2100
LOS ANGELES, CA 90017
213-418-0201

LANDSCAPE ARCHITECT
LYNN CAPOUYA, INC.
17992 MITCHELL SOUTH, #110
IRVINE, CA 92614
949-756-0150

LABORATORY CONSULTANT
RESEARCH FACILITIES DESIGN
3965 FIFTH AVE. #400
SAN DIEGO, CA 92103
619-297-0159

SCIENCE CENTER
SANTA ANA COLLEGE

RANCHO SANTIAGO COMMUNITY COLLEGE DISTRICT

1530 W. 17TH ST.
SANTA ANA, CA 92706

SANTA ANA COLLEGE

I HEREBY CERTIFY THAT THIS PLAN, SPECIFICATION OR REPORT WAS PREPARED BY ME, OR UNDER MY DIRECT SUPERVISION AND THAT I AM A DULY LICENSED PROFESSIONAL ENGINEER UNDER THE LAWS OF THE STATE OF CALIFORNIA.

NAME: Reza Rezaian
EXPIRATION DATE: 9/30/2017
REGISTRATION NUMBER: C62048

NO	DESCRIPTION	DATE
2	Addendum 2	09/01/17

ISSUANCE HISTORY - THIS SHEET

DRAWN BY: SS | REVIEW BY: SV

HGA NO: 3584-001-00

GRADING PLAN

DATE: JULY 06, 2017

C1.34

ADDENDA PACKAGE

N

0 5' 10'
SCALE: 1"=10'

©COPYRIGHT HAMMEL, GREEN AND ABRAHAMSON, INC.

P:\2014\114225 Santa Ana College STEM Project\DWG\SHEET\114225-C1.33-1.35GP.dwg, Aug 30, 2017 - 11:04pm

MATCH LINE SEE SHEET C1.34 INSET FOR CONTINUATION

MATCH LINE SEE SHEET C1.33 FOR CONTINUATION

MATCH LINE SEE SHEET C1.34 FOR CONTINUATION

FF=104.00

LEGEND

LIMIT LINE OF WORK

1918 Main Street, Third Floor
Santa Monica, California 90405
Telephone 310.557.7600

STRUCTURAL ENGINEER
SAIFUL BOUQUET
155 N LAKE AVE
PASADENA, CA 91101
626-304-2616

MECHANICAL & PLUMBING ENGINEER
STANTEC CONSULTING INC
14130 RIVERSIDE DR. # 201
SHERMAN OAKS, CA 91423
818-377-8220

ELECTRICAL ENGINEER
FBA ENGINEERING
150 PAULARINO AVE. #A120
COSTA MESA, CA 92626
949-852-9995

CIVIL ENGINEER
KPFF CONSULTING ENGINEERS
700 S. FLOWER ST., #2100
LOS ANGELES, CA 90017
213-418-0201

LANDSCAPE ARCHITECT
LYNN CAPOUYA, INC.
17992 MITCHELL SOUTH, #110
IRVINE, CA 92614
949-756-0150

LABORATORY CONSULTANT
RESEARCH FACILITIES DESIGN
3965 FIFTH AVE. #400
SAN DIEGO, CA 92103
619-297-0159

SCIENCE CENTER
SANTA ANA COLLEGE

RANCHO SANTIAGO COMMUNITY COLLEGE DISTRICT

1530 W. 17TH ST.
SANTA ANA, CA 92706

SANTA ANA COLLEGE

I HEREBY CERTIFY THAT THIS PLAN, SPECIFICATION OR REPORT WAS PREPARED BY ME OR UNDER MY DIRECT SUPERVISION AND THAT I AM A DULY LICENSED PROFESSIONAL ENGINEER UNDER THE LAWS OF THE STATE OF CALIFORNIA.

NAME: Reza Rezaian
EXPIRATION DATE: 9/30/2017
REGISTRATION NUMBER: C62048

NO	DESCRIPTION	DATE
2	Addendum 2	09/01/17

ISSUANCE HISTORY - THIS SHEET

DRAWN BY: SS | REVIEW BY: SV

HGA NO: 3584-001-00

GRADING PLAN

DATE: JULY 06, 2017

C1.35

ADDENDA PACKAGE

SCALE: 1"=10'

©COPYRIGHT HAMMEL, GREEN AND ABRAHAMSON, INC.

P:\2014\114225 Santa Ana College STEM Project\DWG\SHEET\114225-C1.33-1.35GP.dwg, Aug 30, 2017 - 11:04pm

UTILITY CONSTRUCTION NOTES:

STORM DRAIN

- (SD1) PVC, SDR-35 STORM DRAIN PIPE PER DETAIL 2, SHEET C5.01. SIZE AND SLOPE PER PLAN.
- (SD2) POINT OF CONNECTION 5 FEET FROM BUILDING FACE. SEE PLUMBING DRAWINGS FOR CONTINUATION.
- (SD3) CLEANOUT, PER DETAIL 8, SHEET C5.01.
- (SD4) 12"x12" PRECAST CONCRETE CATCH BASIN. HEAVY DUTY TRAFFIC RATED, HEEL PROOF, STAINLESS STEEL GRATE. JENSEN PRECAST PRODUCTS OR APPROVED EQUIVALENT. 2
- (SD5) CURB INLET PER APWA STANDARD PLAN 300-3 W=6' PER DETAIL 3, SHEET C5.02.
- (SD6) 6" DIAMETER ATRIUM DRAIN WITH UV PROTECTION. NDS PRODUCTS OR APPROVED EQUIVALENT.
- (SD7) FUTURE CDS UNIT PER HEALTH SCIENCE BUILDING PROJECT. SHOWN FOR REFERENCE ONLY. 2
- (SD8) FUTURE 120'x18' CMP INFILTRATION SYSTEM PER HEALTH SCIENCE BUILDING PROJECT. SHOWN FOR REFERENCE ONLY.
- (SD9) CURB OVERFLOW STRUCTURE PER DETAIL 9, SHEET C5.02.
- (SD10) 3" PERFORATED PIPE. SLOPE PER PLAN.
- (SD11) 9" SQUARE PLASTIC GRATE WITH UV PROTECTION. NDS PRODUCTS OR APPROVED EQUIVALENT. 2
- (SD12) 4" AREA DRAIN PER PLUMBING PLANS. SHOWN FOR REFERENCE ONLY.

LEGEND

- LIMIT LINE OF WORK

hga.
1918 Main Street, Third Floor
Santa Monica, California 90405
Telephone 310.557.7600

STRUCTURAL ENGINEER
SAIFUL BOUQUET
155 N LAKE AVE
PASADENA, CA 91101
626-304-2616

MECHANICAL & PLUMBING ENGINEER
STANTEC CONSULTING INC
14130 RIVERSIDE DR. # 201
SHERMAN OAKS, CA 91423
818-377-8220

ELECTRICAL ENGINEER
FBA ENGINEERING
150 PAULARINO AVE. #A120
COSTA MESA, CA 92626
949-852-9995

CIVIL ENGINEER
KPFF CONSULTING ENGINEERS
700 S. FLOWER ST., #2100
LOS ANGELES, CA 90017
213-418-0201

LANDSCAPE ARCHITECT
LYNN CAPOUYA, INC.
17992 MITCHELL SOUTH, #110
IRVINE, CA 92614
949-756-0150

LABORATORY CONSULTANT
RESEARCH FACILITIES DESIGN
3965 FIFTH AVE. #400
SAN DIEGO, CA 92103
619-297-0159

SCIENCE CENTER
SANTA ANA COLLEGE

RANCHO SANTIAGO COMMUNITY COLLEGE DISTRICT

1530 W. 17TH ST.
SANTA ANA, CA 92706

SANTA ANA COLLEGE

I HEREBY CERTIFY THAT THIS PLAN, SPECIFICATION OR REPORT WAS PREPARED BY ME, OR UNDER MY DIRECT SUPERVISION AND THAT I AM A DULY LICENSED PROFESSIONAL ENGINEER UNDER THE LAWS OF THE STATE OF CALIFORNIA.

NAME: Reza Rezaian
EXPIRATION DATE: 9/30/2017
REGISTRATION NUMBER: C62048

NO	DESCRIPTION	DATE
2	Addendum 2	09/01/17

ISSUANCE HISTORY - THIS SHEET

DRAWN BY: SS | REVIEW BY: SV

HGA NO: 3584-001-00

STORM DRAINAGE PLAN

DATE: JULY 06, 2017

C1.40

ADDENDA PACKAGE

N

0 10' 20'
SCALE: 1"=20'

©COPYRIGHT HAMMEL, GREEN AND ABRAHAMSON, INC.

P:\2014\114225 Santa Ana College STEM Project\DWG\SHEET\114225-C1.40UT.dwg, Aug 30, 2017 - 10:46pm

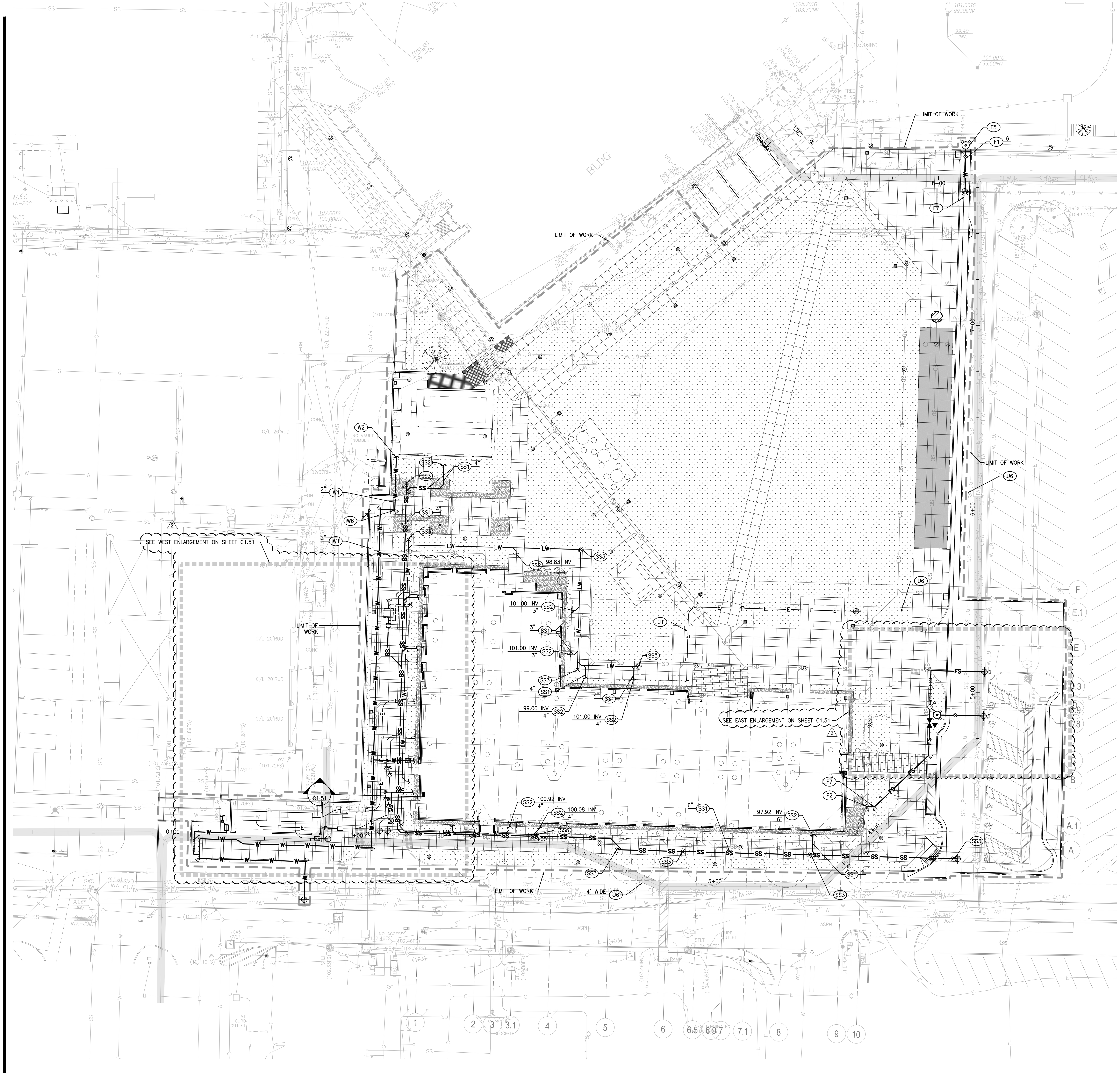

P:\2014\114225 Santa Ana College STEM Project\DWG\SHEET\114225-C1.50UT.dwg, Aug 30, 2017 - 10:48pm

UTILITY CONSTRUCTION NOTES:

SANITARY SEWER

- (SS1) PVC, SDR-35 SANITARY SEWER PIPE PER DETAIL 2, SHEET C5.01. SIZE AND SLOPE PER PLAN.
- (SS2) POINT OF CONNECTION 5 FEET FROM BUILDING FACE. SEE PLUMBING DRAWINGS FOR CONTINUATION.
- (SS3) CLEANOUT. PER DETAIL 8, SHEET C5.01.
- (SS4) EXISTING SANITARY SEWER LATERAL PER SAC INFRASTRUCTURE RENOVATION PROJECT. VERIFY IN FIELD. SHOWN FOR REFERENCE ONLY.

DOMESTIC WATER

- (W1) PVC C-900 DOMESTIC WATER PIPE PER DETAIL 2, SHEET C5.01. SIZE PER PLAN.
- (W2) POINT OF CONNECTION 5 FEET FROM BUILDING FACE. SEE PLUMBING DRAWINGS FOR CONTINUATION.
- (W3) BACKFLOW PREVENTION DEVICE. PER DETAIL 1, SHEET C5.01.
- (W4) IRRIGATION WATER METER VAULT. INSTALLATION BY CONTRACTOR. SHOWN FOR COORDINATION PURPOSES ONLY. CONTRACTOR TO COORDINATE WATER METER OR SUBMETER SERVICE CONNECTION WITH SANTA ANA COLLEGE.
- (W5) EXISTING DOMESTIC WATER LATERAL PER SAC INFRASTRUCTURE RENOVATION PROJECT. VERIFY IN FIELD. SHOWN FOR REFERENCE ONLY.
- (W6) THRUST BLOCK. PER DETAIL 3, SHEET C5.01.
- (W7) LINE SIZE SHUT-OFF-VALVE IN YARD BOX WITH COVER MARKED "WATER". SEE PLUMBING DRAWINGS FOR MORE DETAILS. SHOWN FOR REFERENCE ONLY.
- (W8) IRRIGATION PUMP. SEE IRRIGATION PLANS FOR DETAILS AND SPECIFICATIONS. SHOWN FOR COORDINATION PURPOSES ONLY.
- (W9) IRRIGATION CONTROLLER. SEE IRRIGATION PLANS FOR DETAILS AND SPECIFICATIONS. SHOWN FOR COORDINATION PURPOSES ONLY. (2)
- (W10) IRRIGATION BACKFLOW PREVENTION DEVICE. SEE IRRIGATION PLANS FOR DETAILS AND SPECIFICATIONS. SHOWN FOR COORDINATION PURPOSES ONLY.

FIRE WATER

- (F1) PVC C-900 FIRE WATER PIPE PER DETAIL 2, SHEET C5.01. SIZE AND MATERIAL PER PLAN.
- (F2) POINT OF CONNECTION 5 FEET FROM BUILDING FACE. SEE PLUMBING DRAWINGS FOR CONTINUATION.
- (F3) DOUBLE DETECTOR CHECK VALVE ASSEMBLY WITH FIRE DEPARTMENT CONNECTION. PER DETAIL 1, SHEET C5.01. BACKFLOW PREVENTION DEVICE, AMES 3000CIV OR APPROVED EQUIVALENT. SIZE PER PLAN
- (F4) HOT TAP CONNECTION OR CUT-IN-TEE CONNECTION TO EXISTING 12" CAMPUS FIRE MAIN. INSTALLATION BY CONTRACTOR. SHOWN FOR COORDINATION PURPOSES ONLY. CONTRACTOR TO COORDINATE FIRE WATER SERVICE CONNECTION WITH SANTA ANA COLLEGE.
- (F5) FIRE HYDRANT. PER DETAIL 5, SHEET C5.01.
- (F6) EXISTING FIRE SERVICE LATERAL PER SAC INFRASTRUCTURE RENOVATION PROJECT. VERIFY IN FIELD. SHOWN FOR REFERENCE ONLY.
- (F7) THRUST BLOCK. PER DETAIL 3, SHEET C5.01.
- (F8) POST INDICATOR VALVE PER DETAIL 4, SHEET C5.02. (2)

OTHER UTILITIES

- (U1) ELECTRICAL CONDUIT. SEE ELECTRICAL DRAWINGS FOR DETAILS AND SPECIFICATIONS. SHOWN FOR COORDINATION PURPOSES ONLY.
- (U2) GAS LINE. SEE PLUMBING DRAWINGS FOR DETAILS AND SPECIFICATIONS. SHOWN FOR COORDINATION PURPOSES ONLY.
- (U3) MECHANICAL LINE. SEE MECHANICAL DRAWINGS FOR DETAILS AND SPECIFICATIONS. SHOWN FOR COORDINATION PURPOSES ONLY.
- (U4) POINT OF CONNECTION TO EXISTING GAS LINE PER SAC INFRASTRUCTURE RENOVATION PROJECT. VERIFY IN FIELD. SHOWN FOR REFERENCE ONLY.
- (U5) CHILLED WATER SUPPLY AND RETURN PIPE. SEE MECHANICAL DRAWINGS FOR DETAILS AND SPECIFICATIONS. SHOWN FOR COORDINATION PURPOSES ONLY.
- (U6) EXISTING ELECTRICAL CONDUIT PER SAC INFRASTRUCTURE RENOVATION PROJECT. VERIFY IN FIELD. SHOWN FOR REFERENCE ONLY.
- (U7) EXISTING ELECTRICAL VAULT PER SAC INFRASTRUCTURE RENOVATION PROJECT. VERIFY IN FIELD. SHOWN FOR REFERENCE ONLY.
- (U8) POINT OF CONNECTION OF EXISTING CHILLED WATER LINES
- (U9) POINT OF CONNECTION OF EXISTING ELECTRICAL PULL BOX (2)

LEGEND

- LIMIT OF WORK
- FIRE HYDRANT
- VALVES
- THRUST BLOCK
- POINT OF CONNECTION
- CLEAN OUT
- METER VAULT
- BACKFLOW PROTECTION DEVICE
- FIRE DEPARTMENT CONNECTION

EXISTING UTILITIES NOTE:

EXISTING UNDERGROUND UTILITIES ARE SHOWN BASED ON AVAILABLE RECORD AND AS-BUILT DRAWINGS. THE CONTRACTOR IS REQUIRED TO TAKE ALL PRECAUTIONARY MEASURES TO LOCATE EXISTING UTILITIES PRIOR TO CONSTRUCTION AND PROTECT THE UTILITIES SHOWN AND ANY OTHER UTILITIES NOT SHOWN ON THIS PLAN.

N

0 10' 20'

SCALE: 1"=20'

HGA

1918 Main Street, Third Floor
Santa Monica, California 90405
Telephone 310.557.7600

STRUCTURAL ENGINEER
SAIFUL BOUQUET
155 N LAKE AVE
PASADENA, CA 91101
626-304-2616

MECHANICAL & PLUMBING ENGINEER
STANTEC CONSULTING INC
14130 RIVERSIDE DR. # 201
SHERMAN OAKS, CA 91423
818-377-8220

ELECTRICAL ENGINEER
FBA ENGINEERING
150 PAULARINO AVE. #A120
COSTA MESA, CA 92626
949-852-9995

CIVIL ENGINEER
KPFF CONSULTING ENGINEERS
700 S. FLOWER ST., #2100
LOS ANGELES, CA 90017
213-418-0201

LANDSCAPE ARCHITECT
LYNN CAPOUYA, INC.
17992 MITCHELL SOUTH, #110
IRVINE, CA 92614
949-756-0150

LABORATORY CONSULTANT
RESEARCH FACILITIES DESIGN
3965 FIFTH AVE. #400
SAN DIEGO, CA 92103
619-297-0159

SCIENCE CENTER
SANTA ANA COLLEGE

RANCHO SANTIAGO COMMUNITY COLLEGE DISTRICT

1530 W. 17TH ST.
SANTA ANA, CA 92706

SANTA ANA COLLEGE

I HEREBY CERTIFY THAT THIS PLAN, SPECIFICATION OR REPORT WAS PREPARED BY ME OR UNDER MY DIRECT SUPERVISION AND THAT I AM A DULY LICENSED PROFESSIONAL ENGINEER UNDER THE LAWS OF THE STATE OF CALIFORNIA.

LICENSED ARCHITECT JAMES G. MATSON SEPTEMBER 30, 2017 RENEWAL DATE STATE OF CALIFORNIA

REGISTERED PROFESSIONAL ENGINEER REZA REZAIAN CIVIL STATE OF CALIFORNIA

NAME: Reza Rezaian
EXPIRATION DATE: 9/30/2017
REGISTRATION NUMBER: C62048

NO	DESCRIPTION	DATE
2	Addendum 2	09/01/17

ISSUANCE HISTORY - THIS SHEET

DRAWN BY: SS | REVIEW BY: BV

HGA NO: 3584-001-00

UTILITY PLAN

ADDENDA PACKAGE

DATE: JULY 06, 2017

C1.50

©COPYRIGHT HAMMEL, GREEN AND ABRAHAMSON, INC.

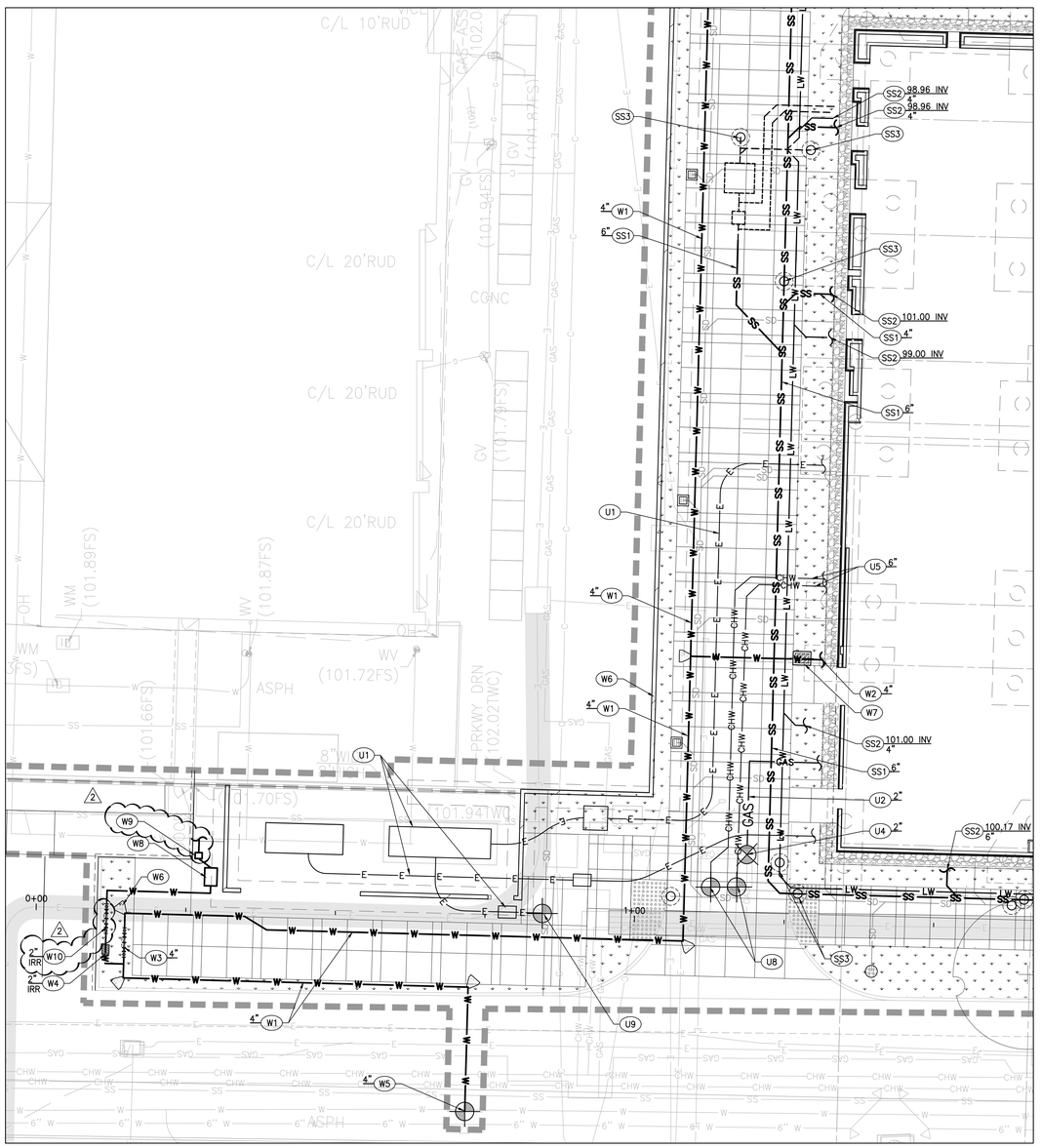

WEST ENLARGEMENT

SCALE: 1"=10'

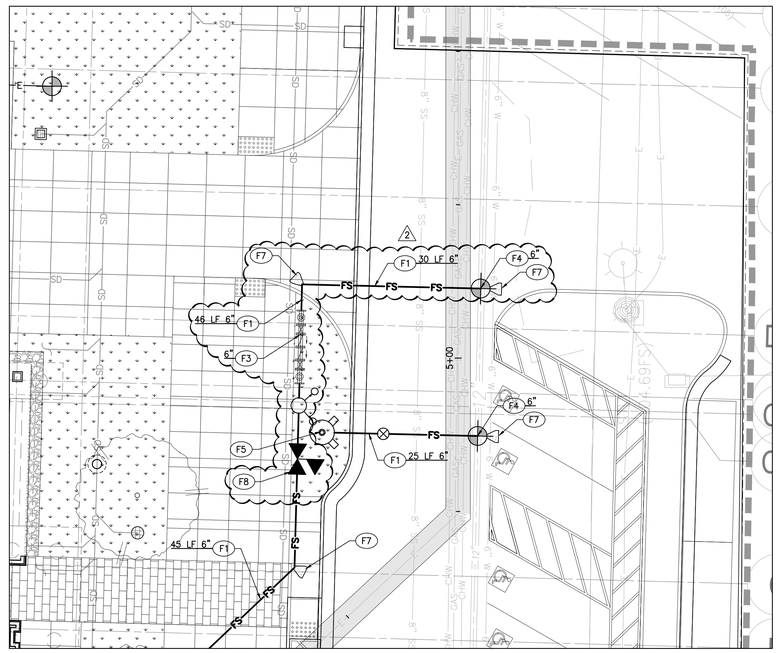

EAST ENLARGEMENT

SCALE: 1"=10'

UTILITY CONSTRUCTION NOTES:

SANITARY SEWER

- SS1 PVC, SDR-35 SANITARY SEWER PIPE PER DETAIL 2, SHEET C5.01. SIZE AND SLOPE PER PLAN.
- SS2 POINT OF CONNECTION 5 FEET FROM BUILDING FACE. SEE PLUMBING DRAWINGS FOR CONTINUATION.
- SS3 CLEANOUT. PER DETAIL 8, SHEET C5.01.
- SS4 EXISTING SANITARY SEWER LATERAL PER SAC INFRASTRUCTURE RENOVATION PROJECT. VERIFY IN FIELD. SHOWN FOR REFERENCE ONLY.

DOMESTIC WATER

- W1 PVC C-900 DOMESTIC WATER PIPE PER DETAIL 2, SHEET C5.01. SIZE PER PLAN.
- W2 POINT OF CONNECTION 5 FEET FROM BUILDING FACE. SEE PLUMBING DRAWINGS FOR CONTINUATION.
- W3 BACKFLOW PREVENTION DEVICE. PER DETAIL 1, SHEET C5.01.
- W4 IRRIGATION WATER METER VAULT. INSTALLATION BY CONTRACTOR. SHOWN FOR COORDINATION PURPOSES ONLY. CONTRACTOR TO COORDINATE WATER METER OR SUBMETER SERVICE CONNECTION WITH SANTA ANA COLLEGE.
- W5 EXISTING DOMESTIC WATER LATERAL PER SAC INFRASTRUCTURE RENOVATION PROJECT. VERIFY IN FIELD. SHOWN FOR REFERENCE ONLY.
- W6 THRUST BLOCK. PER DETAIL 3, SHEET C5.01.
- W7 LINE SIZE SHUT-OFF-VALVE IN YARD BOX WITH COVER MARKED "WATER". SEE PLUMBING DRAWINGS FOR MORE DETAILS. SHOWN FOR REFERENCE ONLY.
- W8 IRRIGATION PUMP. SEE IRRIGATION PLANS FOR DETAILS AND SPECIFICATIONS. SHOWN FOR COORDINATION PURPOSES ONLY.
- W9 IRRIGATION CONTROLLER. SEE IRRIGATION PLANS FOR DETAILS AND SPECIFICATIONS. SHOWN FOR COORDINATION PURPOSES ONLY. △2
- W10 IRRIGATION BACKFLOW PREVENTION DEVICE. SEE IRRIGATION PLANS FOR DETAILS AND SPECIFICATIONS. SHOWN FOR COORDINATION PURPOSES ONLY.

FIRE WATER

- F1 PVC C-900 FIRE WATER PIPE PER DETAIL 2, SHEET C5.01. SIZE AND MATERIAL PER PLAN.
- F2 POINT OF CONNECTION 5 FEET FROM BUILDING FACE. SEE PLUMBING DRAWINGS FOR CONTINUATION.
- F3 DOUBLE DETECTOR CHECK VALVE ASSEMBLY WITH FIRE DEPARTMENT CONNECTION. PER DETAIL 1, SHEET C5.01. BACKFLOW PREVENTION DEVICE, AMES 3000CIV OR APPROVED EQUIVALENT. SIZE PER PLAN
- F4 HOT TAP CONNECTION OR CUT-IN-TEE CONNECTION TO EXISTING 12" CAMPUS FIRE MAIN. INSTALLATION BY CONTRACTOR. SHOWN FOR COORDINATION PURPOSES ONLY. CONTRACTOR TO COORDINATE FIRE WATER SERVICE CONNECTION WITH SANTA ANA COLLEGE.
- F5 FIRE HYDRANT. PER DETAIL 5, SHEET C5.01.
- F6 EXISTING FIRE SERVICE LATERAL PER SAC INFRASTRUCTURE RENOVATION PROJECT. VERIFY IN FIELD. SHOWN FOR REFERENCE ONLY.
- F7 THRUST BLOCK. PER DETAIL 3, SHEET C5.01.
- F8 POST INDICATOR VALVE PER DETAIL 4, SHEET C5.02. △2

OTHER UTILITIES

- U1 ELECTRICAL CONDUIT. SEE ELECTRICAL DRAWINGS FOR DETAILS AND SPECIFICATIONS. SHOWN FOR COORDINATION PURPOSES ONLY.
- U2 GAS LINE. SEE PLUMBING DRAWINGS FOR DETAILS AND SPECIFICATIONS. SHOWN FOR COORDINATION PURPOSES ONLY.
- U3 MECHANICAL LINE. SEE MECHANICAL DRAWINGS FOR DETAILS AND SPECIFICATIONS. SHOWN FOR COORDINATION PURPOSES ONLY.
- U4 POINT OF CONNECTION TO EXISTING GAS LINE PER SAC INFRASTRUCTURE RENOVATION PROJECT. VERIFY IN FIELD. SHOWN FOR REFERENCE ONLY.
- U5 CHILLED WATER SUPPLY AND RETURN PIPE. SEE MECHANICAL DRAWINGS FOR DETAILS AND SPECIFICATIONS. SHOWN FOR COORDINATION PURPOSES ONLY.
- U6 EXISTING ELECTRICAL CONDUIT PER SAC INFRASTRUCTURE RENOVATION PROJECT. VERIFY IN FIELD. SHOWN FOR REFERENCE ONLY.
- U7 EXISTING ELECTRICAL VAULT PER SAC INFRASTRUCTURE RENOVATION PROJECT. VERIFY IN FIELD. SHOWN FOR REFERENCE ONLY.
- U8 POINT OF CONNECTION OF EXISTING CHILLED WATER LINES
- U9 POINT OF CONNECTION OF EXISTING ELECTRICAL PULL BOX △2

LEGEND

- LIMIT OF WORK
- FIRE HYDRANT
- VALVES
- THRUST BLOCK
- POINT OF CONNECTION
- CLEAN OUT
- METER VAULT
- BACKFLOW PROTECTION DEVICE
- FIRE DEPARTMENT CONNECTION

EXISTING UTILITIES NOTE:

EXISTING UNDERGROUND UTILITIES ARE SHOWN BASED ON AVAILABLE RECORD AND AS-BUILT DRAWINGS. THE CONTRACTOR IS REQUIRED TO TAKE ALL PRECAUTIONARY MEASURES TO LOCATE EXISTING UTILITIES PRIOR TO CONSTRUCTION AND PROTECT THE UTILITIES SHOWN AND ANY OTHER UTILITIES NOT SHOWN ON THIS PLAN.

N

0 5' 10'

SCALE: 1"=10'

hga.
1918 Main Street, Third Floor
Santa Monica, California 90405
Telephone 310.557.7600

STRUCTURAL ENGINEER
SAIFUL BOUQUET
155 N LAKE AVE
PASADENA, CA 91101
626-304-2616

MECHANICAL & PLUMBING ENGINEER
STANTEC CONSULTING INC
14130 RIVERSIDE DR. # 201
SHERMAN OAKS, CA 91423
818-377-8220

ELECTRICAL ENGINEER
FBA ENGINEERING
150 PAULARINO AVE. #A120
COSTA MESA, CA 92626
949-852-9995

CIVIL ENGINEER
KPFF CONSULTING ENGINEERS
700 S. FLOWER ST., #2100
LOS ANGELES, CA 90017
213-418-0201

LANDSCAPE ARCHITECT
LYNN CAPOUYA, INC.
17992 MITCHELL SOUTH, #110
IRVINE, CA 92614
949-756-0150

LABORATORY CONSULTANT
RESEARCH FACILITIES DESIGN
3965 FIFTH AVE. #400
SAN DIEGO, CA 92103
619-297-0159

SCIENCE CENTER
SANTA ANA COLLEGE

RANCHO SANTIAGO COMMUNITY COLLEGE DISTRICT

1530 W. 17TH ST.
SANTA ANA, CA 92706

SANTA ANA COLLEGE

I HEREBY CERTIFY THAT THIS PLAN, SPECIFICATION OR REPORT WAS PREPARED BY ME, OR UNDER MY DIRECT SUPERVISION AND THAT I AM A DULY LICENSED PROFESSIONAL ENGINEER UNDER THE LAWS OF THE STATE OF CALIFORNIA.

NAME: Reza Rezaian
EXPIRATION DATE: 9/30/2017
REGISTRATION NUMBER: C62048

NO	DESCRIPTION	DATE
2	Addendum 2	09/01/17

ISSUANCE HISTORY - THIS SHEET

DRAWN BY: SS | REVIEW BY: SV

HGA NO: 3584-001-00

UTILITY PLAN ENLARGEMENT

DATE: JULY 06, 2017

△2 C1.51

ADDENDA PACKAGE

©COPYRIGHT HAMMEL, GREEN AND ABRAHAMSON, INC.

P:\2014\14142S Santa Ana College STEM Project\DWG\SHEET\14225-C1.51UT.dwg, Aug 30, 2017 - 10:50pm

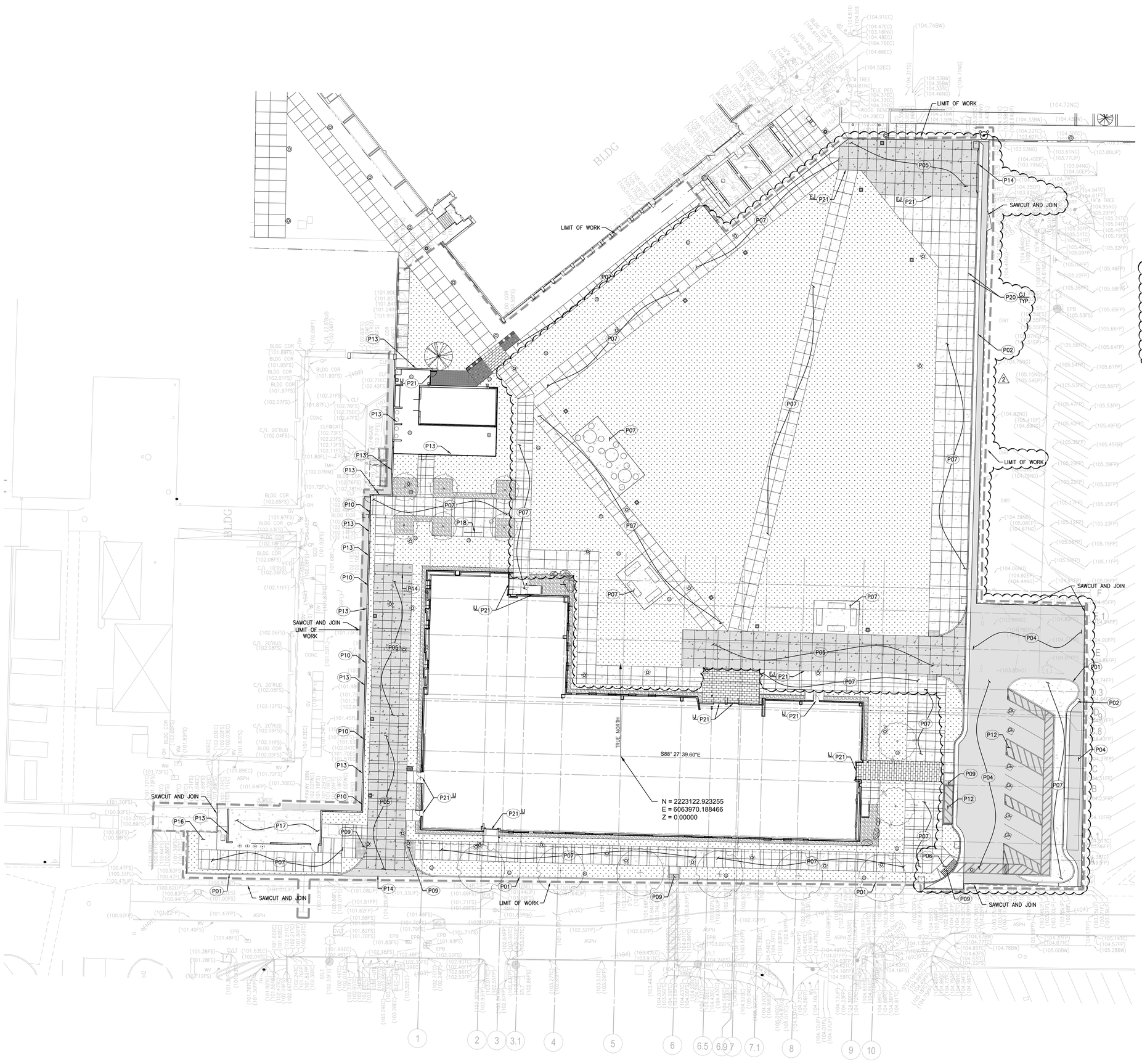

PAVING CONSTRUCTION NOTES

- P01 CONCRETE CURB. PER DETAIL 8, PER SHEET C5.00.
- P02 CONCRETE CURB AND GUTTER. PER DETAIL 6, PER SHEET C5.00.
- P03 CONCRETE VALLEY GUTTER. PER DETAIL 9, PER SHEET C5.00.
- P04 ASPHALT CONCRETE PAVEMENT. PER DETAIL 2, PER SHEET C5.00.
- P05 HEAVY DUTY VEHICULAR CONCRETE PAVEMENT. PER DETAIL 4, PER SHEET C5.00.
- P06 CURB RAMP. PER DETAIL 10, PER SHEET C5.00.
- P07 CONCRETE WALK PAVEMENT. PER DETAIL 7, PER SHEET C5.00.
- P08 CONCRETE BENCH. PER LANDSCAPE ARCHITECT PLANS.
- P09 TRUNCATED DOMES. PER DETAIL 11, PER SHEET C5.00.
- P10 FENCE. PER ARCHITECTURAL PLANS.
- P11 WHEEL STOP. PER DETAIL 2, PER SHEET C5.02.
- P12 ADA STRIPING PER DETAIL 8, SHEET C5.02.
- P13 CMU WALL. PER ARCHITECTURAL PLANS.
- P14 CONCRETE ROLLED CURB. PER DETAIL 5, SHEET C5.02.
- P15 PARKING STALL STRIPING. PER DETAIL 6, SHEET C5.02.
- P16 IRRIGATION PUMP CONCRETE PAD.
- P17 ELECTRICAL EQUIPMENT CONCRETE PAD PER STRUCTURAL PLANS.
- P18 BIKE RACK PER LANDSCAPE ARCHITECT PLANS.
- P19 CROSSWALK STRIPING PER ARCHITECTURAL PLANS.
- P20 CONTROL JOINTS PER DETAIL 3, SHEET C5.00. LOCATION PER CONSTRUCTION PLAN SHEET L1.01.
- P21 EXPANSION JOINTS/ISOLATION JOINTS PER DETAIL 1, SHEET C5.00. LOCATION PER CONSTRUCTION PLAN SHEET L1.01.

ABBREVIATIONS

IJ = ISOLATION JOINT

EJ = EXPANSION JOINT

CJ = CONTROL JOINT

LEGEND

- CONCRETE PAVING (REFER TO SHEET C5.00 FOR DETAILS)
- VEHICULAR CONCRETE PAVING (REFER TO SHEET C5.00 FOR DETAILS)
- ASPHALT (REFER TO SHEET C5.00 FOR DETAILS)
- LANDSCAPE (REFER TO LANDSCAPING PLANS FOR DETAILS)
- LANDSCAPE (REFER TO LANDSCAPING PLANS FOR DETAILS)
- BRICK PAVERS (REFER TO LANDSCAPING PLANS FOR DETAILS)
- SITE WALL (REFER TO ARCHITECTURAL PLANS FOR DETAILS)
- CONCRETE SEAT WALL (REFER TO LANDSCAPING PLANS FOR DETAILS)
- FENCE (REFER TO ARCHITECTURAL PLANS FOR DETAILS)
- LIMIT OF WORK

hga.
1918 Main Street, Third Floor
Santa Monica , California 90405
Telephone 310.557.7600

STRUCTURAL ENGINEER
SAIFUL BOUQUET
155 N LAKE AVE
PASADENA, CA 91101
626-304-2616

MECHANICAL & PLUMBING ENGINEER
STANTEC CONSULTING INC
14130 RIVERSIDE DR. # 201
SHERMAN OAKS, CA 91423
818-377-8220

ELECTRICAL ENGINEER
FBA ENGINEERING
150 PAULARINO AVE. #A120
COSTA MESA, CA 92626
949-852-9995

CIVIL ENGINEER
KPFF CONSULTING ENGINEERS
700 S. FLOWER ST., #2100
LOS ANGELES, CA 90017
213-418-0201

LANDSCAPE ARCHITECT
LYNN CAPOUYA, INC.
17992 MITCHELL SOUTH, #110
IRVINE, CA 92614
949-756-0150

LABORATORY CONSULTANT
RESEARCH FACILITIES DESIGN
3965 FIFTH AVE. #400
SAN DIEGO, CA 92103
619-297-0159

SCIENCE CENTER
SANTA ANA COLLEGE

RANCHO SANTIAGO COMMUNITY COLLEGE DISTRICT

1530 W. 17TH ST.
SANTA ANA, CA 92706

SANTA ANA COLLEGE

I HEREBY CERTIFY THAT THIS PLAN, SPECIFICATION OR REPORT WAS PREPARED BY ME, OR UNDER MY DIRECT SUPERVISION AND THAT I AM A DULY LICENSED PROFESSIONAL ENGINEER UNDER THE LAWS OF THE STATE OF CALIFORNIA.

NAME: Reza Rezaian
EXPIRATION DATE: 9/30/2017
REGISTRATION NUMBER: C62048

NO	DESCRIPTION	DATE
2	Addendum 2	09/01/17

ISSUANCE HISTORY - THIS SHEET

DRAWN BY: SS | REVIEW BY: SV

HGA NO: 3584-001-00

PAVING PLAN

DATE: JULY 06, 2017

C1.60

ADDENDA PACKAGE

SCALE: 1"=20'

©COPYRIGHT HAMMEL, GREEN AND ABRAHAMSON, INC.

P:\2014\114225 Santa Ana College STEM Project\DWG\SHEET\114225-C1.60PV.dwg, Aug 30, 2017 - 11:05pm

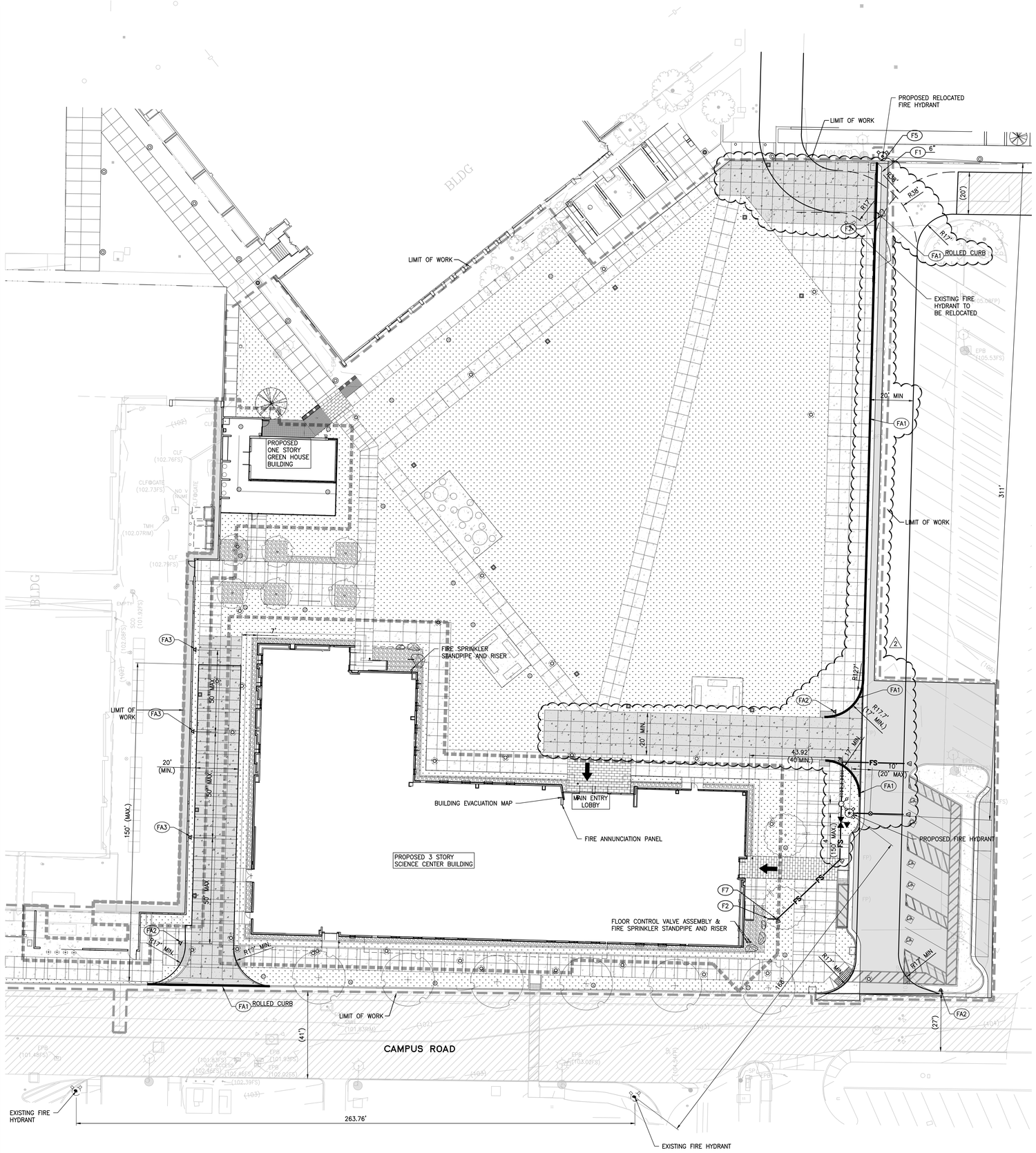

CONSTRUCTION NOTES:

(FA1) FIRE LANE IDENTIFICATION – RED CURBS PER ORANGE COUNTY FIRE AUTHORITY GUIDELINE B–10, ATTACHMENT 4. SEE DETAIL 1, HEREON.

(FA2) "FIRE LANE–NO PARKING" ENTRANCE SIGN PER ORANGE COUNTY FIRE AUTHORITY GUIDELINE B–10, ATTACHMENT 5. SEE DETAIL 2, HEREON.

(FA3) WALL MOUNTED "FIRE LANE–NO PARKING" SIGN PER ORANGE COUNTY FIRE AUTHORITY GUIDELINE B–10, ATTACHMENT 7. SEE DETAIL 3, HEREON.

(FA4) POST MOUNTED "FIRE LANE–NO PARKING" SIGN PER ORANGE COUNTY FIRE AUTHORITY GUIDELINE B–10, ATTACHMENT 7. SEE DETAIL 3, HEREON.

LEGEND

- EXISTING CAMPUS FIRE LANE
- PROPOSED CAMPUS FIRE LANE
- PROPOSED FIRE LANE STRIPING (RED CURB PAINT)
- EXISTING FIRE HYDRANT
- PROPOSED FIRE HYDRANT
- PIV
- FIRE DEPARTMENT CONNECTION
- BACKFLOW PREVENTOR
- LIMIT OF WORK

FIRE WATER

(F1) PVC C–900 FIRE WATER PIPE PER DETAIL 2, SHEET C5.01. SIZE AND MATERIAL PER PLAN.

(F2) POINT OF CONNECTION 5 FEET FROM BUILDING FACE. SEE PLUMBING DRAWINGS FOR CONTINUATION.

(F3) DOUBLE DETECTOR CHECK VALVE ASSEMBLY WITH FIRE DEPARTMENT CONNECTION. PER DETAIL 1, SHEET C5.01.

(F4) HOT TAP CONNECTION OR CUT–IN–TEE CONNECTION TO EXISTING 12" CAMPUS FIRE MAIN. INSTALLATION BY CONTRACTOR. SHOWN FOR COORDINATION PURPOSES ONLY. CONTRACTOR TO COORDINATE FIRE WATER SERVICE CONNECTION WITH SANTA ANA COLLEGE.

(F5) FIRE HYDRANT. PER DETAIL 5, SHEET C5.01.

(F6) EXISTING FIRE SERVICE LATERAL PER SAC INFRASTRUCTURE RENOVATION PROJECT. VERIFY IN FIELD. SHOWN FOR REFERENCE ONLY.

(F7) THRUST BLOCK. PER DETAIL 3, SHEET C5.01.

(F8) POST INDICATOR VALVE PER DETAIL 1, SHEET C5.03.

NOTES:
1. THE ESTIMATED QUANTITIES PROVIDED ABOVE ARE TO BE USED FOR JURISDICTIONAL PLAN CHECKING AND PERMITTING PURPOSES ONLY.
2. THE CONTRACTOR SHALL CALCULATE HIS OWN QUANTITIES NECESSARY FOR HIS BID AND WORK.

ATTACHMENT 4

Fire Lane Identification – Red Curbs

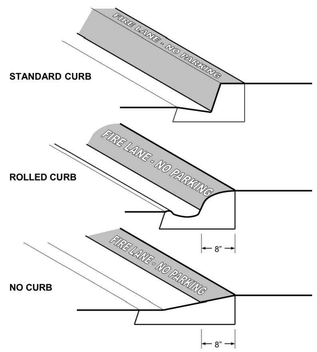

1. Fire lane entrance sign(s) shall be provided per Attachment 5.
2. Curbs shall be painted OSHA safety red.
3. "FIRE LANE – NO PARKING" shall be painted on top of curb in 3" white lettering at a spacing of 30' on center or portion thereof.

1 HEREON **FIRE LANE IDENTIFICATION** N.T.S.

ATTACHMENT 5

Specifications for
Fire Lane Entrance Signs
To be used only at *vehicle entry points*
to areas that contain "Fire Lane—No Parking" signs or red curb

All sign and lettering dimensions shown are minimums. "Arial Narrow" font used in sample above, though other legible sans-serif fonts may be acceptable.

This sign shall be posted at all vehicle entrances to areas marked with either red curbs or fire lane "No Parking" signs. Signs shall be securely mounted facing the direction of travel and clearly visible to oncoming traffic entering the designated area. Signs shall be made of durable material and installed per Attachments 13 and 14.

Towing company contact information is required for all properties with a standing written agreement for services with a towing company per the California Vehicle Code.

2 HEREON **FIRE LANE ENTRANCE SIGN** N.T.S.

ATTACHMENT 7

Specifications for
Fire Lane No Parking Signs

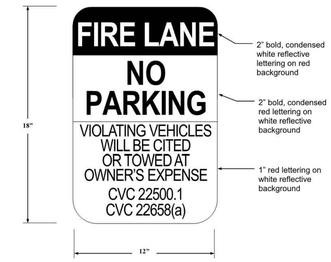

All sign and lettering dimensions shown are *minimums*. "Arial Narrow" font used in sample above, though other legible sans-serif fonts may be acceptable.

Signs shall be securely mounted facing the direction of travel and clearly visible to oncoming traffic entering the designated area. Signs shall be made of durable material and installed per Attachments 13 and 14.

3 HEREON **FIRE LANE "NO PARKING" SIGN** N.T.S.

N

0 10' 20'
SCALE: 1"=20'

hga.
1918 Main Street, Third Floor
Santa Monica, California 90405
Telephone 310.557.7600

STRUCTURAL ENGINEER
SAIFUL BOUQUET
155 N LAKE AVE
PASADENA, CA 91101
626-304-2616

MECHANICAL & PLUMBING ENGINEER
STANTEC CONSULTING INC
14130 RIVERSIDE DR. # 201
SHERMAN OAKS, CA 91423
818-377-8220

ELECTRICAL ENGINEER
FBA ENGINEERING
150 PAULARINO AVE. #A120
COSTA MESA, CA 92626
949-852-9995

CIVIL ENGINEER
KPFF CONSULTING ENGINEERS
700 S. FLOWER ST., #2100
LOS ANGELES, CA 90017
213-418-0201

LANDSCAPE ARCHITECT
LYNN CAPOUYA, INC.
17992 MITCHELL SOUTH, #110
IRVINE, CA 92614
949-756-0150

LABORATORY CONSULTANT
RESEARCH FACILITIES DESIGN
3965 FIFTH AVE. #400
SAN DIEGO, CA 92103
619-297-0159

SCIENCE CENTER
SANTA ANA COLLEGE

RANCHO SANTIAGO COMMUNITY COLLEGE DISTRICT

1530 W. 17TH ST.
SANTA ANA, CA 92706

SANTA ANA COLLEGE

I HEREBY CERTIFY THAT THIS PLAN, SPECIFICATION OR REPORT WAS PREPARED BY ME, OR UNDER MY DIRECT SUPERVISION AND THAT I AM A DULY LICENSED PROFESSIONAL ENGINEER UNDER THE LAWS OF THE STATE OF CALIFORNIA.

LICENSED ARCHITECT JAMES G. MAHONEY No. 18855 STATE OF CALIFORNIA
SEPTEMBER 30, 2017
RENEWAL DATE

REGISTERED PROFESSIONAL ENGINEER CRAIG A. SMITH No. C62048 CIVIL STATE OF CALIFORNIA
PROFESSIONAL ENGINEER

NAME: Reza Rezaian
EXPIRATION DATE: 9/30/2017
REGISTRATION NUMBER: C62048

NO	DESCRIPTION	DATE
2	Addendum 2	09/01/17

ISSUANCE HISTORY - THIS SHEET

DRAWN BY: SS | REVIEW BY: BV

HGA NO: 3584-001-00

FIRE HYDRANT AND ACCESS PLAN

DATE: JULY 06, 2017

C1.70

ADDENDA PACKAGE

©COPYRIGHT HAMMEL, GREEN AND ABRAHAMSON, INC.

P:\2014\114225 Santa Ana College STEM Project\DWG\SHEET\114225-C1.70FA.dwg, Aug 30, 2017 - 11:05pm

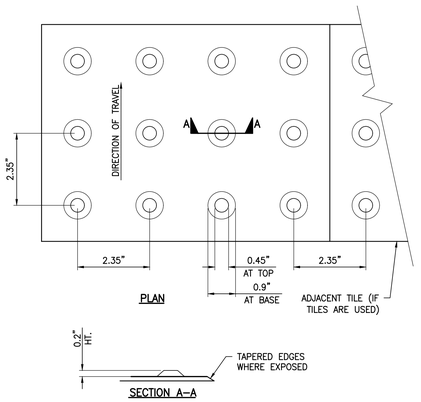

NOTE:

TRUNCATED DOMES SHALL BE OF A DURABLE, SLIP RESISTANT MATERIAL AND SHALL CONTRAST VISUALLY WITH ADJOINING SURFACES.

11 CAST IN PLACE TRUNCATED DOMES N.T.S.

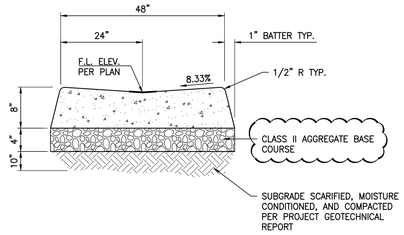

NOTES:

1. ISOLATION JOINTS SHALL BE SEALED PER 1 HEREON AND PLACED ONLY AS SPECIFIED.
2. CONTROL JOINTS CONSISTING OF 1" DEEP SCORES SHALL BE PLACED AT 10' INTERVALS O.C. UNLESS OTHERWISE NOTED ON PLAN.

9 CONCRETE VALLEY GUTTER N.T.S.

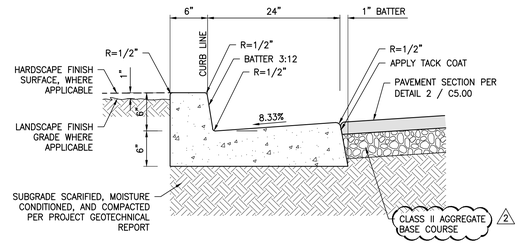

NOTES:

2 1. ISOLATION JOINTS SHALL BE SEALED PER 1 HEREON AND PLACED ONLY AS SPECIFIED.
2. CONTROL JOINTS CONSISTING OF 1" DEEP SCORES SHALL BE PLACED AT 10' INTERVALS O.C. UNLESS OTHERWISE NOTED ON PLAN.
3. WHERE A WALK IS ADJACENT TO THE CURB THE JOINTS SHALL ALIGN WITH JOINTS IN THE WALK.

6 CONCRETE CURB AND GUTTER N.T.S.

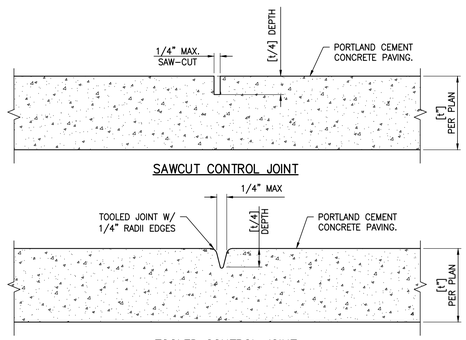

NOTES:

1. CONTROL JOINTS SHALL BE CONSTRUCTED PER S.S.P.W.C.
2. CONSTRUCT CONTROL JOINTS WITHIN 24 HOURS OF POUR.
2 3. SEE PLAN FOR LOCATION OF CONTROL JOINTS. COORDINATE WITH LANDSCAPE PLANS.

3 CONTROL JOINT FOR CONCRETE PAVEMENT N.T.S.

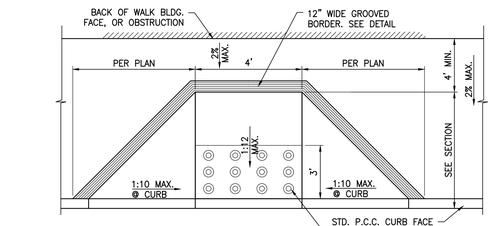

PLAN VIEW CASE "B"

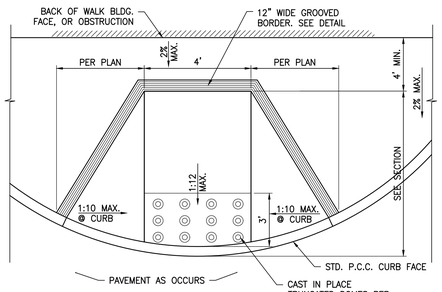

PLAN VIEW CASE "C"

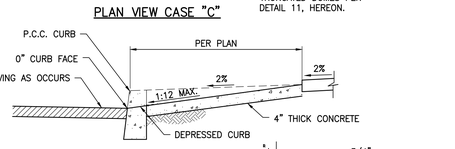

SECTION

NOTES:

1. CONCRETE SHALL BE 2500 PSI.
2. RAMP SURFACE SHALL BE SLIP–RESISTANT AND SHALL BE OF CONTRASTING FINISH FROM THAT OF THE ADJACENT SIDEWALK.
3. DIMENSIONS MAY VARY DEPENDING ON CROSS SLOPE CONDITIONS.

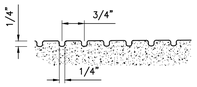

GROOVING DETAIL N.T.S.

10 CURB RAMP N.T.S.

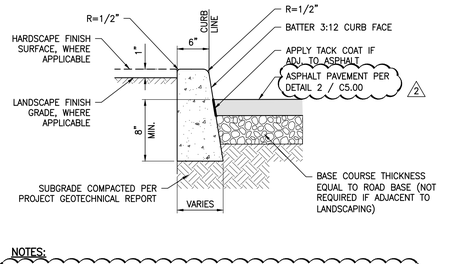

NOTES:

2 1. ISOLATION JOINTS SHALL BE SEALED PER 1 HEREON AND PLACED ONLY AS SPECIFIED.
2. CONTROL JOINTS CONSISTING OF 1" DEEP SCORES SHALL BE PLACED AT 10' INTERVALS O.C.CONTROL JOINTS. UNLESS OTHERWISE NOTED ON PLAN.
3. WHERE A WALK IS ADJACENT TO THE CURB, THE JOINTS SHALL ALIGN WITH JOINTS IN THE WALK.

8 CONCRETE CURB N.T.S.

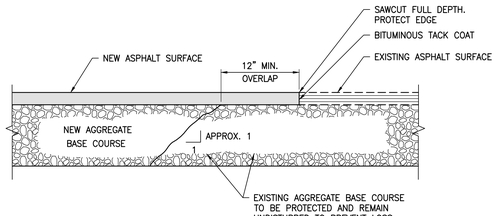

5 ASPHALT PAVEMENT JOIN DETAIL N.T.S.

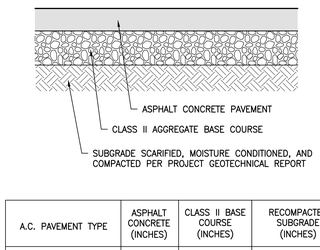

A.C. PAVEMENT TYPE	ASPHALT CONCRETE (INCHES)	CLASS II BASE COURSE (INCHES)	RECOMPACTED SUBGRADE (INCHES)
VEHICULAR PARKING	3"	8"	10"
HEAVY TRUCK TRAFFIC (ONSITE DRIVEWAY & FIRE LANES)	3"	12"	10"

NOTE:

1. PAVEMENT SECTIONS ARE BASED ON RECOMMENDATIONS FROM THE PROJECT GEOTECHNICAL REPORT.

2 ASPHALT PAVEMENT SECTION N.T.S.

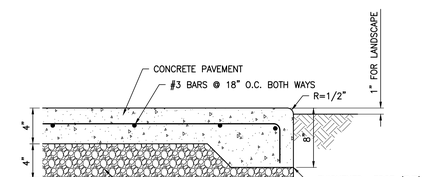

NOTES:

1. ALL TREAD SURFACES SHALL BE SLIP–RESISTANT.
2. REFER TO LANDSCAPE DRAWINGS FOR COLOR, PATTERN, TEXTURE, AND FINISH.
2 3. CONTROL JOINTS PER DETAIL 3 HEREON. SEE PLAN FOR LOCATION OF CONTROL JOINTS. COORDINATE WITH LANDSCAPE DRAWINGS.

7 CONCRETE WALK SECTION N.T.S.

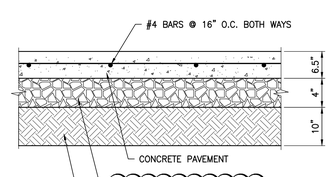

NOTES:

1. PAVEMENT SECTIONS ARE BASED ON RECOMMENDATIONS FROM THE PROJECT GEOTECHNICAL REPORT.
2. REFER TO ARCHITECTURAL PLANS FOR CONCRETE COLOR, PATTERN, TEXTURE, AND FINISH.
2 3. CONTROL JOINTS PER DETAIL 3 HEREON. SEE PLAN FOR LOCATION OF CONTROL JOINTS. COORDINATE WITH LANDSCAPE DRAWINGS.
4. TO BE USED AT FIRE LANE CONDITIONS, TYP.
5. TO BE USED AT ONSITE DRIVEWAYS, TYP.
6. TRAFFIC INDEX = 7.0

4 HEAVY DUTY VEHICULAR REINFORCED CONCRETE PAVEMENT N.T.S.

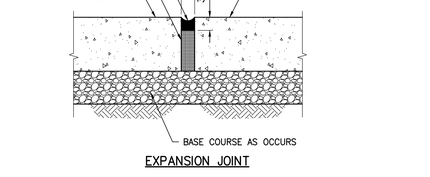

EXPANSION JOINT

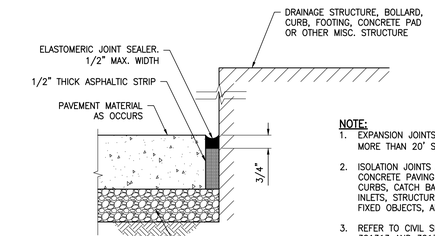

ISOLATION JOINT 2

NOTE:

1. EXPANSION JOINTS ARE LOCATED NO MORE THAN 20' SPACED EVENLY.
2. ISOLATION JOINTS ARE PLACED WHERE CONCRETE PAVING ABUTS CONCRETE CURBS, CATCH BASINS, MANHOLES, INLETS, STRUCTURES, WALKS, OTHER FIXED OBJECTS, AND WHERE INDICATED.
3. REFER TO CIVIL SPECIFICATIONS 321313 AND 321373 FOR MORE INFORMATION.

1 EXPANSION JOINT / ISOLATION JOINT N.T.S.

HGA.
1918 Main Street, Third Floor
Santa Monica, California 90405
Telephone 310.557.7600

STRUCTURAL ENGINEER
SAIFUL BOUQUET
155 N LAKE AVE
PASADENA, CA 91101
626-304-2616

MECHANICAL & PLUMBING ENGINEER
STANTEC CONSULTING INC
14130 RIVERSIDE DR. # 201
SHERMAN OAKS, CA 91423
818-377-8220

ELECTRICAL ENGINEER
FBA ENGINEERING
150 PAULARINO AVE. #A120
COSTA MESA, CA 92626
949-852-9995

CIVIL ENGINEER
KPFF CONSULTING ENGINEERS
700 S. FLOWER ST., #2100
LOS ANGELES, CA 90017
213-418-0201

LANDSCAPE ARCHITECT
LYNN CAPOUYA, INC.
17992 MITCHELL SOUTH, #110
IRVINE, CA 92614
949-756-0150

LABORATORY CONSULTANT
RESEARCH FACILITIES DESIGN
3965 FIFTH AVE. #400
SAN DIEGO, CA 92103
619-297-0159

SCIENCE CENTER
SANTA ANA COLLEGE

RANCHO SANTIAGO COMMUNITY COLLEGE DISTRICT

1530 W. 17TH ST.
SANTA ANA, CA 92706

SANTA ANA COLLEGE

I HEREBY CERTIFY THAT THIS PLAN, SPECIFICATION OR REPORT WAS PREPARED BY ME, OR UNDER MY DIRECT SUPERVISION AND THAT I AM A DULY LICENSED PROFESSIONAL ENGINEER UNDER THE LAWS OF THE STATE OF CALIFORNIA.

NAME: Reza Rezaian
EXPIRATION DATE: 9/30/2017
REGISTRATION NUMBER: C62048

NO	DESCRIPTION	DATE
2	Addendum 2	09/01/17

ISSUANCE HISTORY - THIS SHEET

DRAWN BY: SS | REVIEW BY: SV

HGA NO: 3584-001-00

CIVIL DETAILS

DATE: JULY 06, 2017

C5.00

ADDENDA PACKAGE

©COPYRIGHT HAMMEL, GREEN AND ABRAHAMSON, INC.

P:\2014\114225 Santa Ana College STEM Project\DWG\SHEET\114225-C5.00DT.dwg, Aug 30, 2017 - 11:06pm

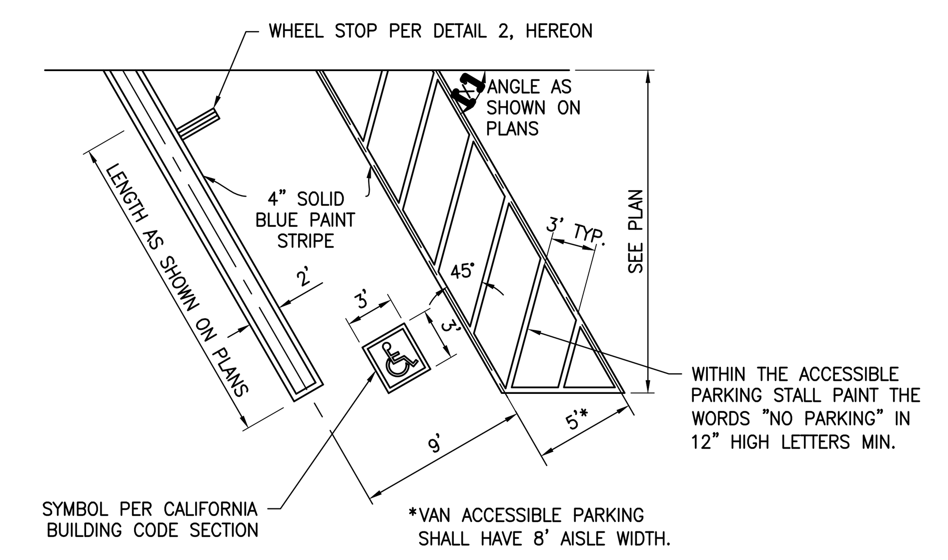

SLOPE SHALL NOT EXCEED 2% IN ANY DIRECTION.

8 | ANGLED ACCESSIBLE PARKING STALL N.T.S.

△2

NOTE:

ADJACENT ROADWAY NOT SHOWN FOR CLARITY.

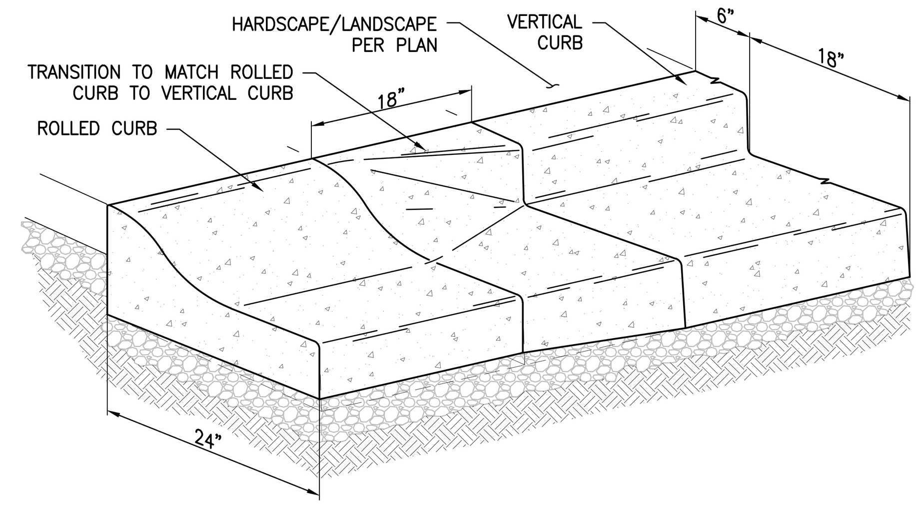

TRANSITION SECTION OF ROLLED CURB TO VERTICAL CURB

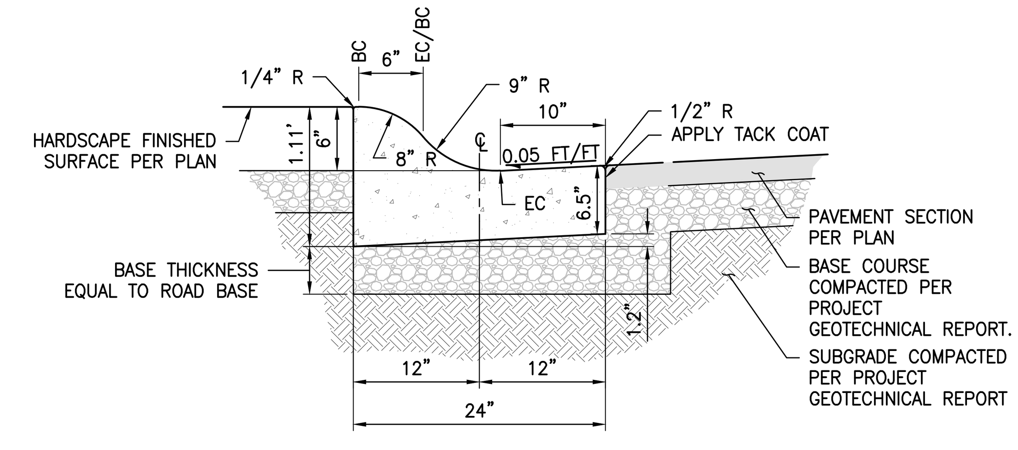

ROLLED CONCRETE CURB AND GUTTER

NOTE:

1. THE CURBS, GUTTERS AND SIDEWALKS SHALL HAVE DUMMY (3/8" x 1 1/2") JOINTS AT INTERVALS OF NOT GREATER THAN 10'-0".
2. CEMENT CONCRETE SHALL BE CLASS B.

5 | 6" ROLLED CONCRETE CURB AND GUTTER [18" OR 24" OR 30"] N.T.S.

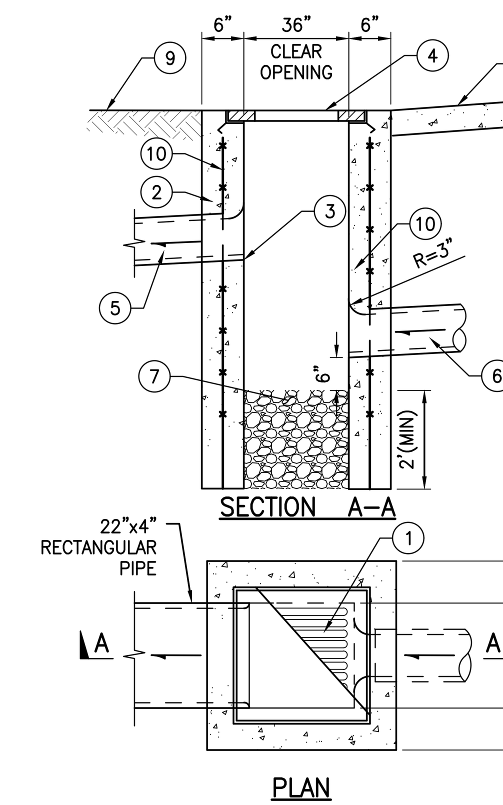

LEGEND:

1. GALVANIZED FRAME AND GRATE, ALHAMBRA FOUNDRY CO., OR APPROVED EQUIVALENT. SIZE AND GRATE BEARING PER PLAN.
2. PORTLAND CEMENT CONCRETE. (f'c = 4000 psi)
3. INVERT ELEVATION PER PLAN.
4. TOP OF GRATE. SEE PLAN FOR ELEVATION.
5. OUTLET RECTANGULAR PIPE, SIZE PER PLAN.
6. INLET PIPE, WHERE OCCURS. SIZE PER PLAN.
7. OPEN-GRADED GRAVEL FILL, APPROX. 1/2" DIA.
8. FINISH SURFACE PER PLAN.
9. FINISH GRADE/SURFACE PER PLAN.
10. CATCH BASIN WALLS AND FLOOR TO BE REINFORCED WITH 4x4-6-6 WELDED WIRE MESH.

9 | CAST-IN-PLACE CONCRETE CATCH BASIN N.T.S.

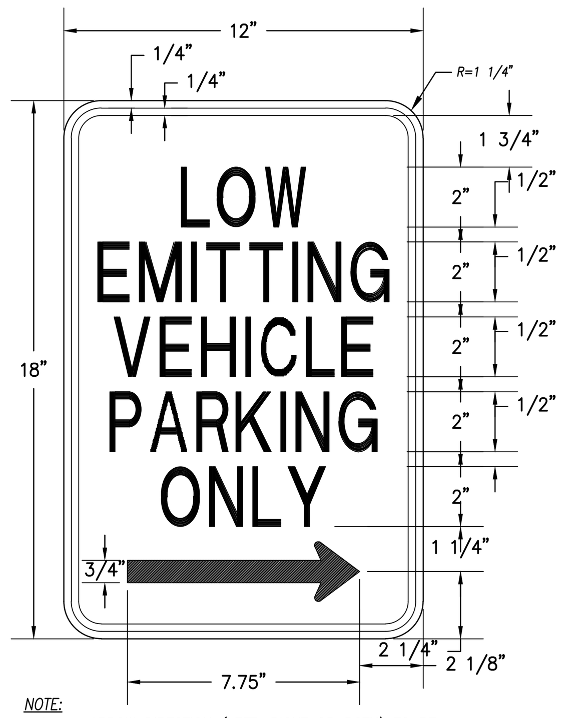

NOTE:
1. *ARROW DIRECTION (LEFT, RIGHT OR BOTH) TO BE SPECIFIED ON PLANS.*
2. *BORDER AND MESSAGE TO BE GREEN, BACKGROUND TO BE WHITE.*

7 | LEV SIGN PANEL DETAIL N.T.S.

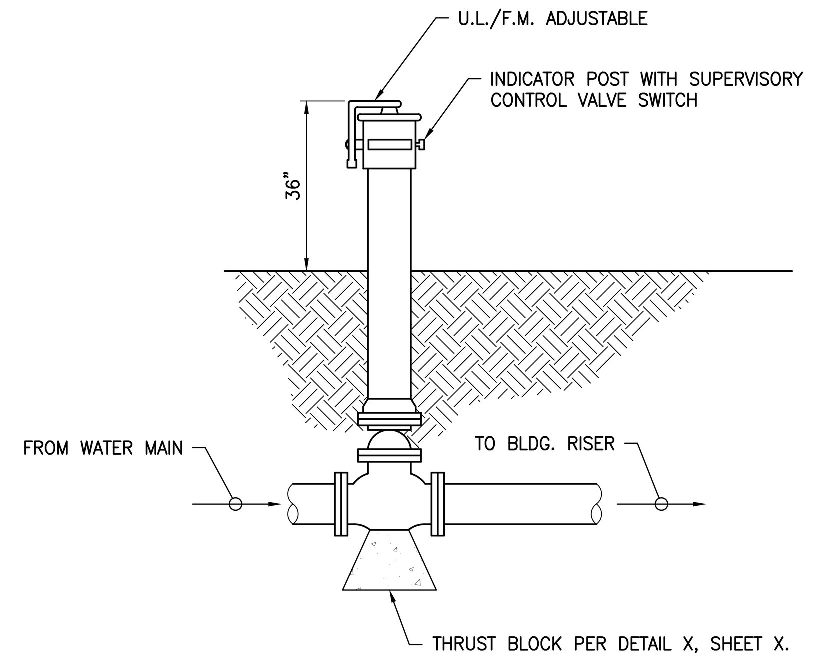

NOTES:

1. THE SYSTEM SHALL BE INSTALLED PER N.F.P.A. 24.
2. THE CONTRACTOR SHALL COORDINATE VALVE LAYOUT WITH FIRE SPRINKLER PLANS.

△2

4 | POST INDICATOR VALVE N.T.S.

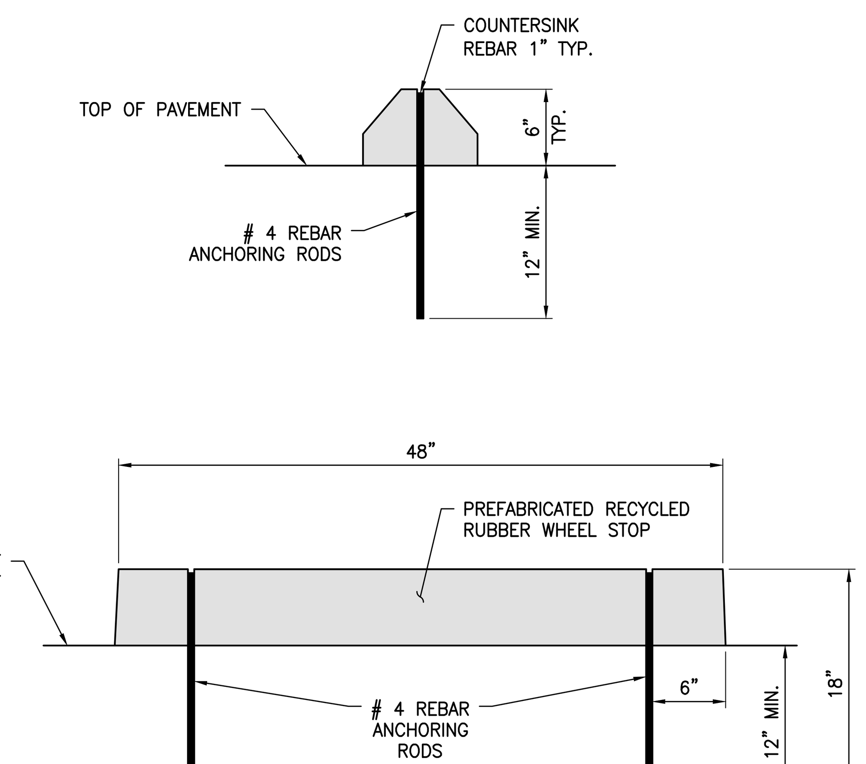

2 | 4' LONG PREFABRICATED RECYCLED RUBBER WHEEL STOP N.T.S.

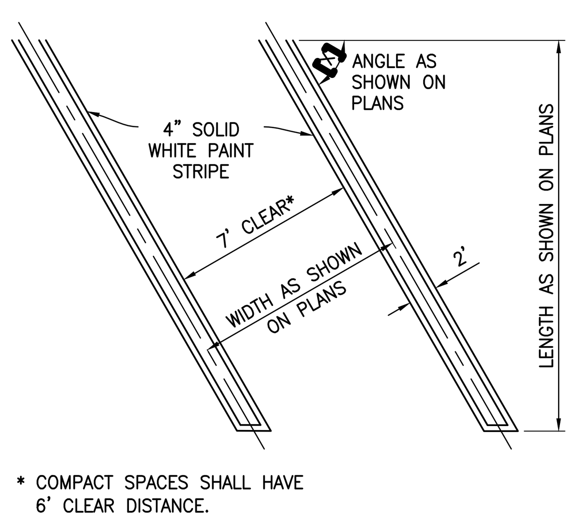

* COMPACT SPACES SHALL HAVE 6' CLEAR DISTANCE.

△2

6 | ANGLED PARKING STALL N.T.S.

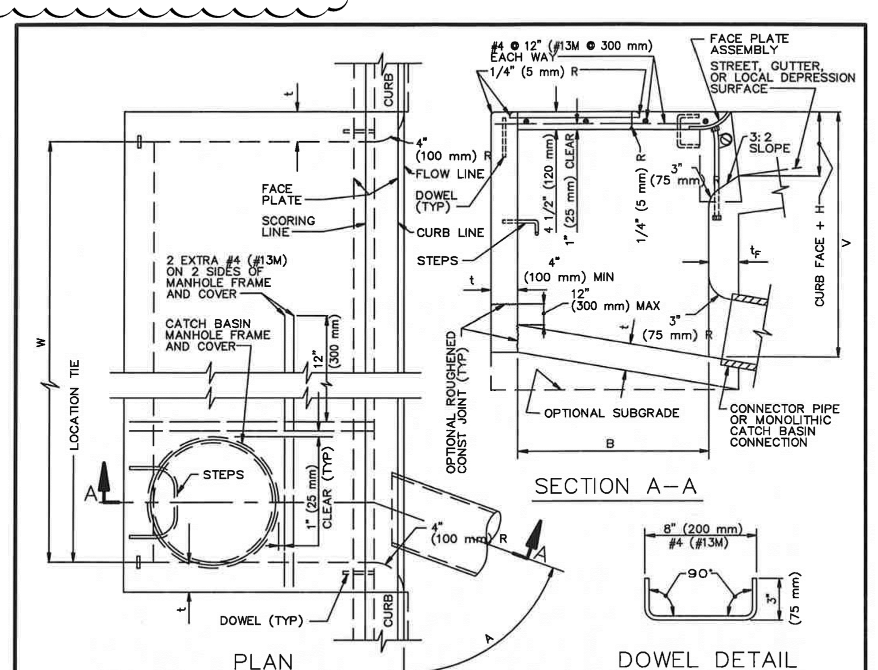

STRUCTURAL DATA

WALL AND SLAB DIMENSIONS AND REINFORCEMENT REQUIREMENTS

MAX W	MAX V	t	t_F	REINFORCEMENT REQUIRED IN: FRONT WALL	REAR WALL	BOTTOM SLAB	END WALL
3.5' (1.0 m)	8' (2.4 m)	6" (150 mm)	6" (150 mm)				
3.5' (1.0 m)	12' (3.5 m)	8" (200 mm)	8" (200 mm)	NO	REINFORCEMENT		REQUIRED
7' (2.0 m)	6' (1.8 m)	6" (150 mm)	6" (150 mm)				
7' (2.0 m)	12' (3.5 m)	8" (200 mm)	8" (200 mm)				
14' (4.0 m)	4' (1.2 m)	6" (150 mm)	6" (150 mm)	REINFORCEMENT			
↓	8' (2.4 m)	6" (150 mm)	8" (200 mm)				
14' (4.0 m)	12' (3.5 m)	8" (200 mm)	10" (250 mm)				
6 m (21') AND 9 m (28')	4' (1.2 m)	6" (150 mm)	6" (150 mm)			REQUIRED	
	6' (1.8 m)	6" (150 mm)	8" (200 mm)				
	8' (2.4 m)	8" (200 mm)	8" (200 mm)				
	10' (3.0 m)	8" (200 mm)	10" (250 mm)				
	12' (3.5 m)	8" (200 mm)	10" (250 mm)				

FOR W > 28' (9 m), V > 12' (3.5 m) OR B > 4' (1.2 m) SEE PLANS

STANDARD PLANS FOR PUBLIC WORKS CONSTRUCTION

PROMULGATED BY THE PUBLIC WORKS STANDARDS, INC., GREENBOOK COMMITTEE 1984 REV. 1992, 1996, 2009

CURB OPENING CATCH BASIN

USE WITH STANDARD SPECIFICATIONS FOR PUBLIC WORKS CONSTRUCTION

STANDARD PLAN 300–3 SHEET 1 OF 2

NOTES:

1. WHERE THE BASIN IS TO BE CONSTRUCTED WITHIN THE LIMITS OF EXISTING OR PROPOSED SIDEWALK OR IS CONTIGUOUS TO SUCH SIDEWALK, THE TOP SLAB OF THE BASIN MAY BE POURED EITHER MONOLITHIC WITH THE SIDEWALK OR SEPARATELY, USING THE SAME CLASS OF CONCRETE AS IN THE BASIN. WHEN POURED MONOLITHICALLY, THE SIDEWALK SHALL BE PROVIDED WITH A WEAKENED PLANE OR A 1" (25 mm) DEEP SAWCUT CONTINUOUSLY AROUND THE EXTERNAL PERIMETER OF THE CATCH BASIN WALLS, INCLUDING ACROSS THE FULL WIDTH OF THE SIDEWALK. SURFACE OF ALL EXPOSED CONCRETE SHALL CONFORM IN SLOPE, GRADE, COLOR, FINISH, AND SCORING TO EXISTING OR PROPOSED CURB AND WALK ADJACENT TO THE BASIN.
2. ALL CURVED CONCRETE SURFACES SHALL BE FORMED BY CURVED FORMS, AND SHALL NOT BE SHAPED BY PLASTERING.
3. FLOOR OF BASIN SHALL BE GIVEN A STEEL TROWEL FINISH AND SHALL HAVE A LONGITUDINAL AND LATERAL SLOPE OF 1:12 MINIMUM AND 1:3 MAXIMUM, EXCEPT WHERE THE GUTTER GRADE EXCEEDS 8%, IN WHICH CASE THE LONGITUDINAL SLOPE OF THE FLOOR SHALL BE THE SAME AS THE GUTTER GRADE. SLOPE FLOOR FROM ALL DIRECTIONS TO THE OUTLET.
4. DIMENSIONS:
   - B = 3'-2" (970 mm)
   - V = THE DIFFERENCE IN ELEVATION BETWEEN THE TOP OF THE CURB AND THE INVERT OF THE CATCH BASIN AT THE OUTLET = 4.5' (1.35 m).
   - V_U = THE DIFFERENCE IN ELEVATION BETWEEN THE TOP OF THE CURB AND THE INVERT AT THE UPSTREAM END OF THE BASIN, AND SHALL BE DETERMINED BY THE REQUIREMENTS OF NOTE 3, BUT SHALL NOT BE LESS THAN CURB FACE PLUS 12" (300 mm).
   - V_I = THE DIFFERENCE IN ELEVATION BETWEEN THE TOP OF THE CURB AND THE INVERT OF THE INLET, NOTED ON THE PLANS.
   - H = NOTED ON THE PLANS.
   - W = NOTED ON THE PLANS.
   - A = THE ANGLE, IN DEGREES, INTERCEPTED BY THE CENTERLINE OF THE CONNECTOR PIPE AND THE CATCH BASIN WALL TO WHICH THE CONNECTOR PIPE IS ATTACHED.
5. PLACE CONNECTOR PIPES AS INDICATED ON THE PLANS. UNLESS OTHERWISE SPECIFIED, THE CONNECTOR PIPE SHALL BE LOCATED AT THE DOWNSTREAM END OF THE BASIN. WHERE THE CONNECTOR PIPE IS SHOWN AT A CORNER, THE CENTERLINE OF THE PIPE SHALL INTERSECT THE INSIDE CORNER OF THE BASIN. THE PIPE MAY BE CUT AND TRIMMED AT A SKEW NECESSARY TO INSURE MINIMUM 3" (80 mm) PIPE EMBEDMENT, ALL AROUND, WITHIN THE CATCH BASIN WALL, AND 3" (75 mm) RADIUS OF ROUNDING OF STRUCTURE CONCRETE, ALL AROUND, ADJACENT TO PIPE ENDS. A MONOLITHIC CATCH BASIN CONNECTION SHALL BE USED TO JOIN THE CONNECTOR PIPE TO THE CATCH BASIN WHENEVER ANGLE "A" IS LESS THAN 70° OR GREATER THAN 110°, OR WHENEVER THE CONNECTOR PIPE IS LOCATED IN A CORNER. THE OPTIONAL USE OF A MONOLITHIC CATCH BASIN CONNECTION IN ANY CASE IS PERMITTED. MONOLITHIC CATCH BASIN CONNECTIONS MAY BE CONSTRUCTED TO AVOID CUTTING STANDARD LENGTHS OF PIPE.
6. STEPS SHALL BE LOCATED AS SHOWN. IF THE CONNECTOR PIPE INTERFERES WITH THE STEPS, THEY SHALL BE LOCATED AT THE CENTERLINE OF THE DOWNSTREAM END WALL. STEPS SHALL BE SPACED 12" (300 mm) APART. THE TOP STEP SHALL BE 7" (175 mm) BELOW THE TOP OF THE MANHOLE AND PROJECT 2-1/2" (65 mm). ALL OTHER STEPS SHALL PROJECT 5" (130 mm).
7. DOWELS ARE REQUIRED AT EACH CORNER AND AT 7' (2 m) ON CENTER (MAXIMUM) ALONG THE BACKWALL.
8. THE FOLLOWING SPPWC ARE INCORPORATED HEREIN:
   - 308 MONOLITHIC CATCH BASIN CONNECTION
   - 309 CATCH BASIN REINFORCEMENT
   - 310 CATCH BASIN FACE PLATE ASSEMBLY AND PROTECTION BAR
   - 312 CATCH BASIN MANHOLE FRAME AND COVER
   - 635 STEEL STEP
   - 636 POLYPROPYLENE PLASTIC STEP

STANDARD PLANS FOR PUBLIC WORKS CONSTRUCTION

CURB OPENING CATCH BASIN

STANDARD PLAN 300–3 SHEET 2 OF 2

3 | CURB OPENING CATCH BASIN N.T.S.

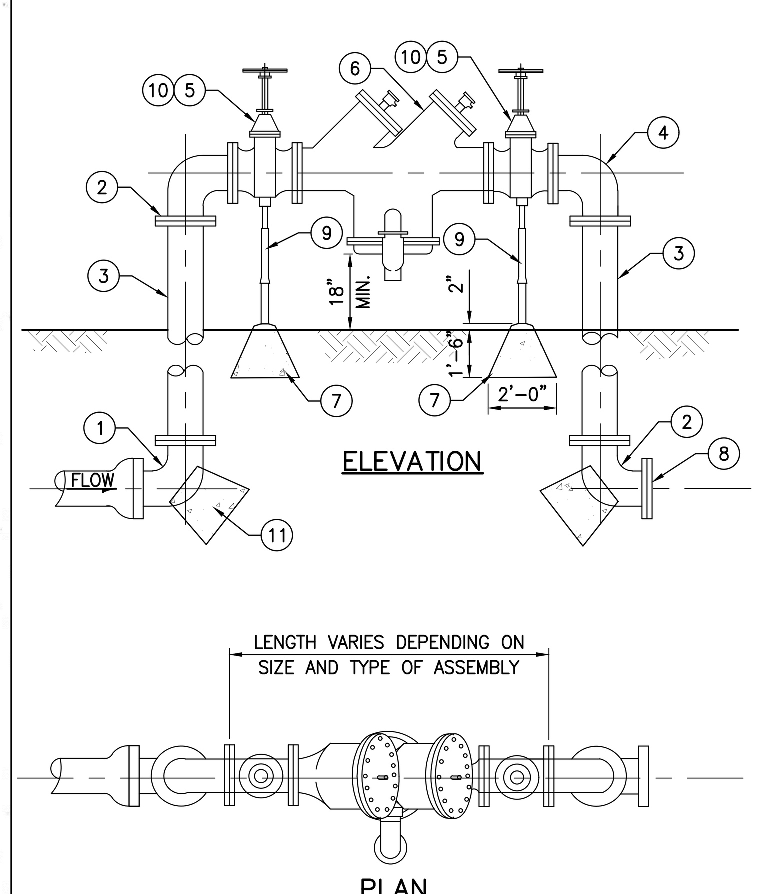

MATERIAL

1. 90° D.I. ELL x PUSH-ON
2. 90° D.I. ELL FLG x FLG
3. D.I. SPOOL FLG x FLG
4. 90° D.I. ELL FLG x FLG
5. U.S.C.-APPROVED SHUT-OFF VALVES. SEE SPECIFICATIONS
6. APPROVED REDUCED PRESSURE DEVICE (SEE PLAN FOR SIZE)
7. CONCRETE FOOTING
8. TEMPORARY D.I. BLIND FLANGE, AS REQUIRED
9. GALVANIZED ADJUSTABLE PIPE SUPPORT, PER MANUFACTURER'S RECOMMENDATION.
10. TAMPER SWITCH WIRED TO FIRE ALARM CONTROL PANEL, WHEN APPLICABLE.
11. THRUST BLOCK.

NOTES:

1. INSTALLATION SHALL COMPLY WITH THE LATEST PLUMBING CODES AND APPLICABLE LOCAL AGENCY REQUIREMENTS.
2. THRUST BLOCKS SHALL BE SIZED PER DETAIL SHOWN HEREON.
3. USE LEAD-FREE MODEL FOR ALL DOMESTIC WATER LINES.

1 | TYPICAL REDUCED PRESSURE PRINCIPLE BACKFLOW ASSEMBLY N.T.S.

HGA
1918 Main Street, Third Floor
Santa Monica, California 90405
Telephone 310.557.7600

STRUCTURAL ENGINEER
SAIFUL BOUQUET
155 N LAKE AVE
PASADENA, CA 91101
626-304-2616

MECHANICAL & PLUMBING ENGINEER
STANTEC CONSULTING INC
14130 RIVERSIDE DR. # 201
SHERMAN OAKS, CA 91423
818-377-8220

ELECTRICAL ENGINEER
FBA ENGINEERING
150 PAULARINO AVE. #A120
COSTA MESA, CA 92626
949-852-9995

CIVIL ENGINEER
KPFF CONSULTING ENGINEERS
700 S. FLOWER ST., #2100
LOS ANGELES, CA 90017
213-418-0201

LANDSCAPE ARCHITECT
LYNN CAPOUYA, INC.
17992 MITCHELL SOUTH, #110
IRVINE, CA 92614
949-756-0150

LABORATORY CONSULTANT
RESEARCH FACILITIES DESIGN
3965 FIFTH AVE. #400
SAN DIEGO, CA 92103
619-297-0159

SCIENCE CENTER
SANTA ANA COLLEGE
RANCHO SANTIAGO COMMUNITY COLLEGE DISTRICT
1530 W. 17TH ST.
SANTA ANA, CA 92706

SANTA ANA COLLEGE

I HEREBY CERTIFY THAT THIS PLAN, SPECIFICATION OR REPORT WAS PREPARED BY ME OR UNDER MY DIRECT SUPERVISION AND THAT I AM A DULY LICENSED PROFESSIONAL ENGINEER UNDER THE LAWS OF THE STATE OF CALIFORNIA.

NAME: Reza Rezaian
EXPIRATION DATE: 9/30/2017
REGISTRATION NUMBER: C62048

△NO	DESCRIPTION	DATE
2	Addendum 2	09/01/17

ISSUANCE HISTORY - THIS SHEET

DRAWN BY: SS | REVIEW BY: BV

HGA NO: 3584-001-00

CIVIL DETAILS

DATE: JULY 06, 2017

ADDENDA PACKAGE

C5.02

©COPYRIGHT HAMMEL, GREEN AND ABRAHAMSON, INC.

P:\2014\114225 Santa Ana College STEM Project\DWG\SHEET\114225-C5.02DT.dwg, Aug 31, 2017 - 1:48pm

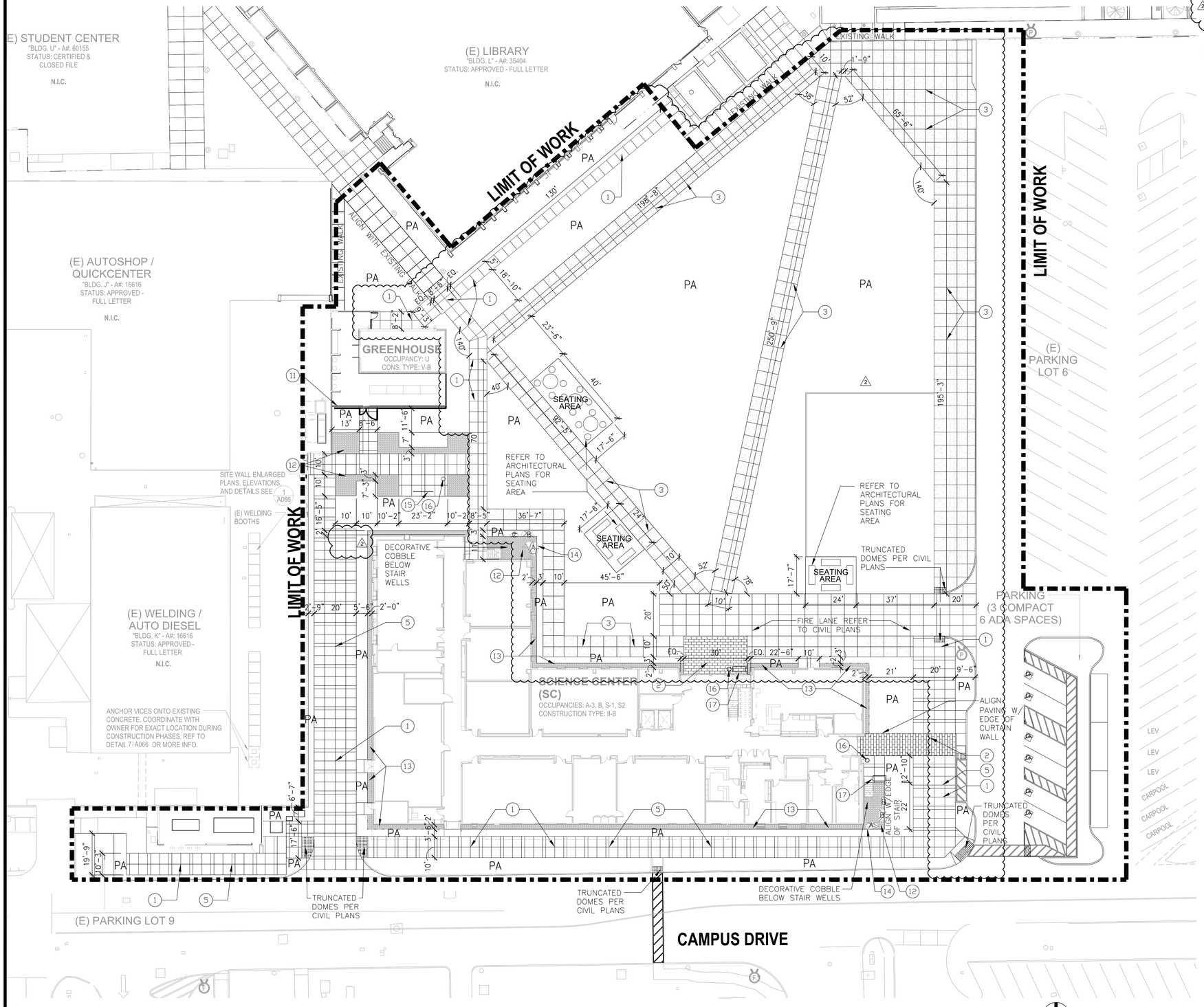

CONSTRUCTION LEGEND

SYMBOL	DESCRIPTION	DETAIL NO.	DETAIL SHEET
1	CONCRETE PAVING COLOR: NATURAL GRAY FINISH: TOPCAST 03 * SCORE JOINTS PER PLAN - SAW CUT; EXPANSION JOINTS LOCATION REFER TO CIVIL	SEE CIVIL DETAILS 1,3,7	C5.00
2	CONCRETE PAVER TYPE: 15" x 30" MESA BEIGE FINISH: SHOT BLAST PATTERN: RUNNING BOND	3	L1.02
3	CONCRETE PAVING COLOR: NATURAL GRAY FINISH: MEDIUM BROOM FINISH * SCORE JOINTS PER PLAN - SAW CUT; EXPANSION JOINTS LOCATION REFER TO CIVIL	SEE CIVIL DETAILS 1,3,7	C5.00
4	NOT USED		
5	18" WIDE CONCRETE PAVING COLOR: NATURAL GRAY FINISH: TOPCAST 03 * SCORE JOINTS PER PLAN - SAW CUT; EXPANSION JOINTS LOCATION REFER TO CIVIL	SEE CIVIL DETAILS 1,3,7	C5.00
6	NOT USED		
7	NOT USED		
8	NOT USED		
9	NOT USED		
10	NOT USED		
11	DECORATIVE STEEL FENCE W/ GATE	PER ARCH	
12	DECORATIVE COBBLE WITH STEEL EDGING A: COBBLE MULCH MEXICAN BEACH BUFF AVAILABLE FROM SOUTHWEST BOULDER & STONE OR APPROVED EQUAL 2" - 4" COBBLE, LIGHT BEIGE TO TAN B: STEEL EDGING ALUMINUM EDGING AVAILABLE FROM PERMALOC OR APPROVED EQUAL CLEANLINE XL, $\frac{3}{8}$" X 10" BLACK ANODIZED	5	L1.02
13	2' WIDE COBBLE MAINTENANCE STRIP WITH STEEL EDGING ADJACENT TO ARCHITECTURE A: COBBLE MULCH MEXICAN BEACH BUFF AVAILABLE FROM SOUTHWEST BOULDER & STONE OR APPROVED EQUAL 2" - 4" COBBLE, LIGHT BEIGE TO TAN B: STEEL EDGING ALUMINUM EDGING AVAILABLE FROM PERMALOC OR APPROVED EQUAL CLEANLINE XL, $\frac{3}{8}$" X 10" BLACK ANODIZED	5	L1.02
14	BOULDER MALIBU BOULDERS AVAILABLE FROM SOUTHWEST BOULDER & STONE OR APPROVED EQUAL SIZE IN DIAMETER A=5', B=4", C=3', VARYING COLORS FROM BEIGE TO GREEN & GRAY NOTE: TO BE LOCATED IN FIELD BY ARCHITECT AND LANDSCAPE ARCHITECT	8	L1.02
15	BIKE RACK BY DERO BIKE RACK CO. ROLLING RACK 4H - (2 TOTAL) COLOR: STAINLESS STEEL		
16	TRASH RECEPTACLE, RUBBERMAID COMMERCIAL PRODUCTS, MODEL H55E. 63 GALLON CAPACITY. COLOR BLACK. INSTALL PER MANUFACTURER'S RECOMMENDATION		
17	RECYCLING STATION, BELSON OUTDOORS, TRIPLE SECTION RECYCLING STATION MODEL RC-3-34. SOLID FINISH COLOR BLACK, INSTALL PER MANUFACTURER'S RECOMMENDATION		
	PA PLANTING AREA (SEE PLANTING PLAN)		

CONSTRUCTION GENERAL NOTES

1. THIS PLAN IS FOR THE PURPOSE OF HORIZONTAL CONTROL (STAKING) OF CONSTRUCTION FEATURES NOT LOCATED BY THE CIVIL ENGINEERING AND ARCHITECTURAL DRAWINGS; AND THE CONSTRUCTION REFERENCE OF SITE FEATURES DETAILED HEREIN.
2. CONTRACTOR TO VERIFY SITE CONDITIONS PRIOR TO BEGINNING CONSTRUCTION. ALL DISCREPANCIES SHALL BE BROUGHT TO THE ATTENTION OF THE AUTHORIZED REPRESENTATIVE.
3. CONTRACTOR SHALL BE RESPONSIBLE FOR MAKING HIMSELF FAMILIAR WITH ALL UNDERGROUND UTILITIES, PIPES AND STRUCTURES. CONTRACTOR SHALL TAKE SOLE RESPONSIBILITY FOR COST INCURRED DUE TO DAMAGE AND REPLACEMENT OF SAID UTILITIES.
4. CONTRACTOR SHALL NOT WILLFULLY PROCEED WITH CONSTRUCTION AS DESIGNED WHEN IT IS OBVIOUS THAT UNKNOWN OBSTRUCTIONS AND/OR GRADE DIFFERENCES EXIST THAT MAY NOT HAVE BEEN KNOWN DURING DESIGN. SUCH CONDITIONS SHALL BE IMMEDIATELY BROUGHT TO THE ATTENTION OF THE AUTHORIZED REPRESENTATIVE. THE CONTRACTOR SHALL ASSUME FULL RESPONSIBILITY FOR ALL NECESSARY REVISIONS DUE TO FAILURE TO GIVE SUCH NOTIFICATION.
5. CONTRACTOR SHALL BE RESPONSIBLE FOR ANY COORDINATION WITH OTHER SUB-CONTRACTORS AS REQUIRED TO ACCOMPLISH CONSTRUCTION OPERATIONS.
6. CONSTRUCTION PERTAINING TO THESE DRAWINGS SHALL CONFORM TO GOVERNING CODES AND ORDINANCES.
7. COMPLIANCE WITH ADA ACCESSIBILITY STANDARDS FOR MATERIALS, FINISHES, AND GRADIENTS IS THE RESPONSIBILITY OF THE CONTRACTOR WHERE SUCH STANDARDS APPLY.
8. THE CONTRACTOR SHALL COMPLY WITH APPLICABLE LOCAL CODES AND ORDINANCES.
9. ALL NEW AND EXISTING UTILITY APPURTENANCES SUCH AS MANHOLE COVERS AND VALVE BOXES SHALL BE ADJUSTED TO FINISHED SURFACE.
10. SAMPLES: PROVIDE 4'X4' MOCK UP FOR APPROVAL FOR ALL HARDSCAPE MATERIALS TO BE INSTALLED.
11. FINAL LOCATION OF TRASH AND RECYCLING STATION TO BE PER THE OWNER.

hga.
1918 Main Street, Third Floor
Santa Monica, California 90405
Telephone 310.557.7600

STRUCTURAL ENGINEER
SAIFUL BOUQUET
155 N LAKE AVE
PASADENA, CA 91101
626-304-2616

MECHANICAL & PLUMBING ENGINEER
STANTEC CONSULTING INC
14130 RIVERSIDE DR. # 201
SHERMAN OAKS, CA 91423
818-377-8220

ELECTRICAL ENGINEER
FBA ENGINEERING
150 PAULARINO AVE. #A120
COSTA MESA, CA 92626
949-852-9995

CIVIL ENGINEER
KPFF CONSULTING ENGINEERS
700 SOUTH FLOWER ST. #2100
LOS ANGELES, CA 90017
213-418-0201

LANDSCAPE ARCHITECT
LYNN CAPOUYA, INC.
17992 MITCHELL SOUTH, #110
IRVINE, CA 92614
949-756-0150

LABORATORY CONSULTANT
RESEARCH FACILITIES DESIGN
3965 FIFTH AVE. #400
SAN DIEGO, CA 92103
619-297-0159

SCIENCE CENTER
SANTA ANA COLLEGE
RANCHO SANTIAGO COMMUNITY COLLEGE DISTRICT
1530 W. 17TH ST.
SANTA ANA, CA 92706

SANTA ANA COLLEGE

I HEREBY CERTIFY THAT THIS PLAN, SPECIFICATION OR REPORT WAS PREPARED BY ME OR UNDER MY DIRECT SUPERVISION AND THAT I AM A DULY LICENSED LANDSCAPE ARCHITECT UNDER THE LAWS OF THE STATE OF CALIFORNIA

REGISTERED LANDSCAPE ARCHITECT LYNN CAPOUYA No. 2314 RENEWAL 08/31/2017 STATE OF CALIFORNIA

NAME: LYNN CAPOUYA
DATE: AUGUST 24, 2017
REGISTRATION NUMBER: 2314

NO	DESCRIPTION	DATE
2	Addendum 2	9/1/17

ISSUANCE HISTORY - THIS SHEET

DRAWN BY: JZ | REVIEW BY: KY

HGA NO: 3584-001-00

CONSTRUCTION PLAN

DATE: JULY 06, 2017

L1.01 ADDENDA PACKAGE

©COPYRIGHT HAMMEL, GREEN AND ABRAHAMSON, INC.

NOT USED | 9

NOT USED | 7

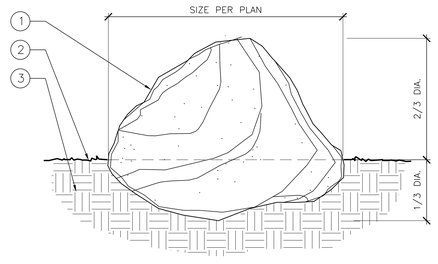

SECTION

LEGEND

1. BOULDER PER PLAN
2. FINISH GRADE.
3. COMPACTED SUB GRADE PER GEOTECHNICAL REPORT.

NOTE:

1. PLACE ROCK WITH FRACTURE/ IMPERFECTION FACE DOWN.
2. REFER TO L1.01 FOR BOULDER SIZE AND COLOR.
3. FINAL LOCATIONS OF BOULDERS TO BE APPROVED BY ARCHITECT AND LANDSCAPE ARCHITECT.

BOULDER | SCALE: NTS | 8

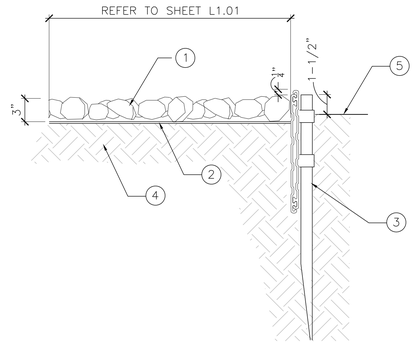

LEGEND

1. 2–4" DIAMETER DECORATIVE COBBLE, 3" LAYER DEPTH
2. WEED BARRIER
3. ALUMINUM EDGING 3/16" x 10" BLACK ANODIZED w/ 18" ALUMINUM STAKE @ 3' O.C. AND @ ENDS AND CHANGES IN DIRECTION
4. COMPACTED SUBGRADE PER GEOTECHNICAL REPORT
5. FINISH GRADE

NOTES:

1. WASH ALL EXPOSED PORTIONS OF COBBLE SO THAT FINISH APPEARS CLEAN.

NOT USED | 6

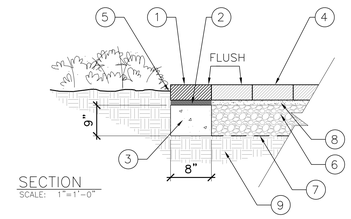

SECTION
SCALE: 1"=1'-0"

LEGEND

1. PAVER EDGE
2. 1" MORTAR BASE
3. CONCRETE EDGE RESTRAINT
4. ADJACENT FIELD PAVERS ON AGGREGATE BASE PER GEOTECHNICAL REPORT.
5. PLANTER AREA: FINISH GRADE TO BE 2" BELOW PAVER EDGE FOR SHRUBS
6. AGGREGATE BASE – REFER TO GEOTECHNICAL REPORT
7. GEOTEXTILE FABRIC, MIRAFI 140N
8. 1" SAND SETTING BED
9. COMPACTED SUB–GRADE

NOT USED | 4

CONCRETE PAVERS | SCALE: 1"=1'-0" | 3

DECORATIVE COBBLE WITH HEADER | SCALE: NTS | 5

1918 Main Street, Third Floor
Santa Monica , California 90405
Telephone 310.557.7600

STRUCTURAL ENGINEER
SAIFUL BOUQUET
155 N LAKE AVE
PASADENA, CA 91101
626-304-2616

MECHANICAL & PLUMBING ENGINEER
STANTEC CONSULTING INC
14130 RIVERSIDE DR. # 201
SHERMAN OAKS, CA 91423
818-377-8220

ELECTRICAL ENGINEER
FBA ENGINEERING
150 PAULARINO AVE. #A120
COSTA MESA, CA 92626
949-852-9995

CIVIL ENGINEER
KPFF CONSULTING ENGINEERS
700 SOUTH FLOWER ST. #2100
LOS ANGELES, CA 90017
213-418-0201

LANDSCAPE ARCHITECT
LYNN CAPOUYA, INC.
17992 MITCHELL SOUTH, #110
IRVINE, CA 92614
949-756-0150

LABORATORY CONSULTANT
RESEARCH FACILITIES DESIGN
3965 FIFTH AVE. #400
SAN DIEGO, CA 92103
619-297-0159

SCIENCE CENTER
SANTA ANA COLLEGE

RANCHO SANTIAGO COMMUNITY COLLEGE DISTRICT

1530 W. 17TH ST.
SANTA ANA, CA 92706

SANTA ANA COLLEGE

I HEREBY CERTIFY THAT THIS PLAN, SPECIFICATION OR REPORT WAS PREPARED BY ME OR UNDER MY DIRECT SUPERVISION AND THAT I AM A DULY LICENSED LANDSCAPE ARCHITECT UNDER THE LAWS OF THE STATE OF CALIFORNIA.

LICENSED ARCHITECT — LYNN S. MAY CAPOUYA — No. 2314 — SEPTEMBER 30, 2017 — RENEWAL DATE — STATE OF CALIFORNIA

REGISTERED LANDSCAPE ARCHITECT — LYNN CAPOUYA — No. 2314 — REGISTRATION EXPIRES: AUGUST 31, 2019 — STATE OF CALIFORNIA

NAME: LYNN CAPOUYA
DATE: AUGUST 24, 2017
REGISTRATION NUMBER: 2314

NO	DESCRIPTION	DATE
2	Addendum 2	9/1/17

ISSUANCE HISTORY - THIS SHEET

DRAWN BY: | REVIEW BY:

HGA NO: 3584-001-00

CONSTRUCTION DETAILS

DATE: JULY 06, 2017

L1.02

ADDENDA PACKAGE

©COPYRIGHT HAMMEL, GREEN AND ABRAHAMSON, INC.

(E) STUDENT CENTER
"BLDG. U" - A#: 60155
STATUS: CERTIFIED & CLOSED FILE
N.I.C.

(E) LIBRARY
"BLDG. L" - A#: 35404
STATUS: APPROVED - FULL LETTER
N.I.C.

(E) AUTOSHOP / QUICKCENTER
"BLDG. J" - A#: 16616
STATUS: APPROVED - FULL LETTER
N.I.C.

(E) WELDING / AUTO DIESEL
"BLDG. K" - A#: 16616
STATUS: APPROVED - FULL LETTER
N.I.C.

ANCHOR VICES ONTO EXISTING CONCRETE. COORDINATE WITH OWNER FOR EXACT LOCATION DURING CONSTRUCTION PHASES. REF TO DETAIL 7 / A066 OR MORE INFO.

SITE WALL ENLARGED PLANS, ELEVATIONS, AND DETAILS SEE 1 / A066

(E) WELDING BOOTHS

SEE ENLARGEMENT

LIMIT OF WORK

LIMIT OF WORK

GREENHOUSE
OCCUPANCY: U
CONS. TYPE: V-B

SEATING AREA

SEATING AREA

SEATING AREA

SCIENCE CENTER (SC)
OCCUPANCIES: A-3, B, S-1, S2
CONSTRUCTION TYPE: II-B

(E) PARKING LOT 6

PARKING (3 COMPACT & ADA SPACES)

LEV
LEV
LEV
CARPOOL
CARPOOL
CARPOOL

(E) PARKING LOT 9

CAMPUS DRIVE

A15 10 1.5" S
A14 24 1.5" S
A13 12 1.5" S
A18 30 1.5" S
A17 42 1.5" S
A16 28 1.5" S
A12 10 1.5" S
A11 3.5 1.5" TR
A8 3 1" S
A7 9 1" S
A10 41 1.5" S
A9 5 1" S
A6 5 1" S
A5 3 1" S
A4 12 1" S
A3 8 1" S
A2 2 1" TR
A21 36 1.5" S
A20 32 1.5" S
A19 39 1.5" S
A1 12 1" S

ENLARGED PLAN AT P.O.C.

SCALE: 1" = 10'

LOCATE AND TIE INTO MAINLINE STUBOUT
MASTER VALVE
FLOW SENSOR
LOCATE AND TIE INTO MAINLINE STUBOUT
MAINLINE
BACKFLOW
WATER METER – REFER TO CIVIL PLAN

2" VALVE WIRE CONDUIT – REFER TO CIVIL PLAN FOR EXACT LOCATION
IRRIGATION CONTROLLER – REFER TO ELECTRICAL PLAN FOR POWER CONNECTION
LOCATE AND CONNECT TO MAINLINE STUBOUT – REFER TO CIVIL PLAN
LOCATE AND CONNECT TO PUMP ELECTRICAL STUBOUT – REFER TO ELECTRICAL PLAN
PUMP STATION
PUMP STATION MAINLINE – REFER TO CIVIL PLAN FOR EXACT LOCATION

20' 0' 10' 20' 40'
SCALE: 1" = 20'

REFER TO SHEET L2.01 FOR LEGENDS AND NOTES

hga.
1918 Main Street, Third Floor
Santa Monica, California 90405
Telephone 310.557.7600

STRUCTURAL ENGINEER
SAIFUL BOUQUET
155 N LAKE AVE
PASADENA, CA 91101
626-304-2616

MECHANICAL & PLUMBING ENGINEER
STANTEC CONSULTING INC
14130 RIVERSIDE DR. # 201
SHERMAN OAKS, CA 91423
818-377-8220

ELECTRICAL ENGINEER
FBA ENGINEERING
150 PAULARINO AVE. #A120
COSTA MESA, CA 92626
949-852-9995

CIVIL ENGINEER
KPFF CONSULTING ENGINEERS
700 SOUTH FLOWER ST. #2100
LOS ANGELES, CA 90017
213-418-0201

LANDSCAPE ARCHITECT
LYNN CAPOUYA, INC.
17992 MITCHELL SOUTH, #110
IRVINE, CA 92614
949-756-0150

LABORATORY CONSULTANT
RESEARCH FACILITIES DESIGN
3965 FIFTH AVE. #400
SAN DIEGO, CA 92103
619-297-0159

SCIENCE CENTER
SANTA ANA COLLEGE

RANCHO SANTIAGO COMMUNITY COLLEGE DISTRICT

1530 W. 17TH ST.
SANTA ANA, CA 92706

SANTA ANA COLLEGE

I HEREBY CERTIFY THAT THIS PLAN, SPECIFICATION OR REPORT WAS PREPARED BY ME OR UNDER MY DIRECT SUPERVISION AND THAT I AM A DULY LICENSED LANDSCAPE ARCHITECT UNDER THE LAWS OF THE STATE OF CALIFORNIA

NAME: LYNN CAPOUYA
DATE: AUGUST 24, 2017
REGISTRATION NUMBER: 2314

NO	DESCRIPTION	DATE
2	Addendum 2	9/1/17

ISSUANCE HISTORY - THIS SHEET

DRAWN BY: REVIEW BY:

HGA NO: 3584-001-00

IRRIGATION PLAN

DATE: JULY 06, 2017

L2.00

ADDENDA PACKAGE

©COPYRIGHT HAMMEL, GREEN AND ABRAHAMSON, INC.

SPRINKLER HEAD LEGEND

SPRAY PATTERN	MANUFACTURE	BODY	NOZZLE	SPACING	PSI	FLOW GPM F	FLOW GPM TH	FLOW GPM H	FLOW GPM Q	DETAILS	SHEET
TURF POP UP											
	RAINBIRD	RD-06-P45-F	R13-18	10'-14'	45	1.96	1.51	.98	.49	6	L2.03
	RAINBIRD	RD-06-P45-F	R17-24	15'-18'	45	3.67	2.73	1.84	.92		
SHRUB POP UP											
	RAINBIRD	RD-12-P30-F	SQ	2'-4'	30	.4	-	.2	.12	6	L2.03
	RAINBIRD	RD-12-P45-F	R13-18	10'-14'	45	1.96	1.51	.98	.49		
	RAINBIRD	RD-12-P45-F	R17-24	15'-18'	45	3.67	2.73	1.84	.92		
SHRUB ON RISER											
	RAINBIRD	PA-8S-PRS	SQ	2'-4'	30	.4	-	.2	.12	5	L2.03
	RAINBIRD	PA-8S-PRS	R13-18	10'-18'	45	1.96	1.51	.98	.49		
	RAINBIRD	PA-8S-PRS	R17-24	17'-24'	45	3.67	2.73	1.84	.92		
ROTOR											
①	HUNTER	I-20-12-MPR-30-Q GREEN		25'-30'	45	-	-	-	1.4	7	L2.03
②	HUNTER	I-20-12-MPR-30-H GREEN		25'-30'	45	-	-	2.96	-		
③	HUNTER	I-20-12-MPR-30-F GREEN		25'-30'	45	5.78	-	-	-		
BUBBLER											
	RAINBIRD	RWS-M-B-1401 MINI (TREE)		3'	30	.25	-	-	-	4	L2.03
	RAINBIRD DRIP ASSEMBLY	12" POLYFLEX RISER PC-05 PRESSURE COMPENSATING EMITTER 10-32A THREAD ADAPTER								1	L2.04

NOTE: ALL HEADS ON SLOPES SHALL HAVE CHECK VALVE

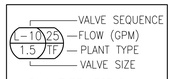

PLAN TYPE LEGEND:
T – TURF
S – SHRUBS
TR – TREES
P – PALMS
V – VINE

SLEEVE SIZING LEGEND	
USE SCH 40 PVC	
SLEEVE SIZE	INSERTED PIPE SIZE
(2X) 2"	1/2" TO 1"
(3X) 3"	1 1/4" TO 1 1/2"
(4X) 4"	2"
(6X) 6"	2 1/2" TO 3"
MAINLINE AND WIRE SLEEVE COMBO	
(6X)	ONE-6" + TWO-4" PER SET
(8X)	ONE-8" + TWO-4" PER SET

(4X) — SLEEVE SIZE
NUMBER OF OR SETS OF SLEEVES

PIPE SIZING LEGEND		
SCH 40		
PIPE SIZE		GPM
B	3/4"	5 – 8
C	1"	9 – 13
D	1 1/4"	14 – 23
E	1 1/2"	24 – 30
F	2"	31 – 55
CLASS 315		
G	2 1/2"	56 – 70
H	3"	71 – 100
CLASS 200		
I	4"	101 – 200
J	6"	200 – 430
K	8"	430 – 730

IRRIGATION EQUIPMENT LEGEND

SYMBOL	MANUF.	MODEL NO.	SIZE	DESCRIPTION	DETAILS	SHEET
M			2"	WATER METER – PER CIVIL ENGINEER'S PLANS	–	–
P	RAINBIRD	CLP05VBASIC1/CLPBSTSW BOOSTER PUMP 3PH-230VAC WITH FLOW START SWITCH	–	BOOSTER PUMP STATION BY RAINBIRD PER DETAIL AND SPECS PUMP SHALL BE ON CONCRETE PAD WITH ENCLOSURE. VERIFY FINAL LOCATION AND SIZE.	1	L2.05
	FEBCO FEBCO VIT	825Y 650A SBBC-SS SERIES	2" 2"	BACKFLOW PREVENTER WITH WYE STRAINER- SHALL BE ENCLOSED IN STAINLESS STEEL STRONG BOX ENCLOSURE. CONTRACTOR SHALL ACQUIRE BACKFLOW CERTIFICATION FROM THE CITY PRIOR TO TURN OVER	2	L2.02
	GRISWOLD CALSENSE	2030 SERIES CS-2W-POC DECODER	2"	MASTER CONTROL VALVE WITH DECODER, NORMALLY CLOSED – SIZE PER PLAN.	3	L2.02
F	CALSENSE	FM-B SERIES CS-2W-POC DECODER	1.5"	FLOW METER WITH DECODER – INSTALL PER MANUFACTURER SPECIFICATION – SIZE PER PLAN	4	L2.02
	NIBCO	T-113	2.5"	GATE VALVE – DUCTILE IRON, RESILIENT WEDGE, SQUARE OPERATING NUT – MATCH MAINLINE SIZE	5	L2.02
	RAINBIRD	1" 44-LRC	1"	QUICK COUPLER-LOCKING RUBBER COVER, 2-PIECE BODY	6	L2.02
ASSEMBLY	RAINBIRD NIBCO CALSENSE	EFB-CP T-FP-600A CS-2W-2ST DECODER	VARY VARY	REMOTE CONTROL VALVE ASSEMBLY w/ BRASS BALL VALVE AND BRASS UNION. BALL VALVE TO MATCH VALVE SIZE – SIZE PER PLAN	7	L2.02
DRIP ASSEMBLY	RAINBIRD NIBCO NETAFIM NETAFIM CALSENSE	EFB-CP T-FP-600A REGULATOR FILTER WITH 140 MESH BLACK DISC RINGS CS-2W-2ST DECODER	VARY VARY VARY VARY	LOW FLOW/DRIP REMOTE CONTROL VALVE ASSEMBLY w/ BRASS BALL VALVE, BRASS UNION, INLINE PRESSURE REGULATOR AND DRIP FILTER. BALL VALVE TO MATCH VALVE SIZE – SIZE PER PLAN PRESSURE REGULATOR 32PRV.75-43V2K, 43 PSI FOR SYSTEM FROM 1-17 GPM MAX 32PRV1.5-43V2K, 43 PSI FOR SYSTEM FROM 18-35 GPM MAX FILTER DF-100-140 FOR SYSTEM FROM 1-17 GPM MAX DF-150-140 FOR SYSTEM FROM 18-35 GPM MAX	8	L2.02
	NETAFIM SPEARS	TLAVRV 1/2" SCH 40 BALL VALVE	1/2" 1/2"	MANUAL FLUSH AND AIR RELEASE VALVE IN A 12" ROUND VALVE BOX	4	L2.04
	CALSENSE CS-3000 SERIES 2-WIRE WITH DECODER CS3-2W-S1/CS3-EN/CS-2W-2ST/CS-2W-POC/FM XX SET MAXIMUM FLOW CAPACITY TO 70 GPM			CONTROLLER SHALL BE INSTALLED IN STAINLESS STEEL ENCLOSURE WITH ON/ OFF SWITCH. CONTRACTOR TO VERIFY 120V ELECTRICAL POWER SERVICE WITH RSCCD PRIOR START OF WORK. EXACT CONTROLLER LOCATION SHALL BE DETERMINED BY OWNER'S. CONTRACTOR SHALL OBTAIN CERTIFICATION FROM CALSENSE AND PROVIDE A COPY TO THE OWNER AND LANDSCAPE ARCHITECT PRIOR TO TURN OVER OF MAINTENANCE. CONTROLLER SHALL BE ASSEMBLED BY: CALSENSE CONTACT: MARK HUNTZINGER (760) 580-1827 CONTRACTOR SHALL PROGRAM EACH CONTROLLER TO RUN ON MAXIMUM FLOW CAPACITY SETTING. REFER TO CS-3000 CONTROLLER PROGRAMMING GUIDE. CALL ERIC HANSEN AT 1-800-572-8608 TO SET UP A NO CHARGE APPOINTMENT TO LEARN HOW TO PROGRAM THE CONTROLLER. WIRE CONNECTOR: 3M SCOTCH LOCK 3570 CONNECTORS. SPACE 100' MAX DISTANCE BETWEEN DECODER AND VALVE OR POC. TWO WIRE CABLE: IRRIGATION CONTROL, COMMON AND FLOW SENSOR WIRE SHALL BE PAIGE ELECTRIC SERIES • P7354D DIRECT BURIAL •12 GAUGE 2-WIRE. INSTALL 2-WIRE CABLE SYSTEM IN A 1 1/4" PVC ELECTRICAL CONDUIT AND JUNCTION AT EVERY REMOTE CONTROL VALVE BOX WITH ELECTRICAL PVC SWEEPS. MAXIMUM RUN 7,000 FEET. GROUNDING REQUIREMENTS: EVERY 300 FEET WITH ONE 5/8" X 8' COPPER GROUNDING ROD PER IRRIGATION CONTROLLER AND DECODER. USE •6 AWG SOLID COPPER WIRE FROM THE COPPER ROD TO THE FIELD COMMON (WHITE WIRES IN THE BLACK HARNESS) OF THE CONTROLLER / DECODER. ELECTRICAL SERVICE - REFER TO ELECTRICAL PLAN	1	L2.02
	RAINBIRD XFS SUB-SURFACE DRIPLINE XFSP-09-18-500			INSTALL DRIPLINE @ EVERY 18" O.C. AND BURY AT 4" DEEP	2,3	L1.04
	MAINLINE PIPE P.V.C. SCHEDULE 40 FOR PIPE 2" SIZE AND SMALLER, CLASS 315 FOR PIPE 2 1/2" AND LARGER BURY 18" BELOW FINISH GRADE – SIZE PER PLAN. CONTRACTOR SHALL MARK ALL NEW MAINLINES AND SLEEVES WITH 3" DETECTABLE UNDERGROUND WARNING TAPE OF THE APPROPRIATE COLOR AS IDENTIFIED IN THE APWA UNIFORM COLOR CODE. BY T-CHRISTY MODEL #TA-DT-3-BIRR				3	L2.03
	P.V.C. SCHEDULE 40 LATERAL LINE PIPE, BURY 12" BELOW FINISH GRADE – SIZE PER PLAN				3	L2.03
	MAINLINE AND LATERAL SLEEVING, CLASS 315 FOR 2" THROUGH 4", CLASS 200 FOR 6" AND ABOVE. SLEEVE PIPING SHALL BE MINIMUM 2X THE DIAMETER OF THE INSERTED MAINLINE OR LATERAL PIPING SIZE OTHERWISE NOTED ON PLAN. BURY 24" BELOW FINISH GRADE WIRE SLEEVE SHALL BE 4" CLASS 315 BURY 24" BELOW FINISH GRADE ALL MAINLINE SLEEVES SHALL BE ACCOMPANIED BY A WIRE SLEEVE				3	L2.03
	IRRIGATION NOTES: 1. THIS PLAN IS DIAGRAMMATIC. PIPING & VALVES SHOWN IN PAVED AREAS ARE TO BE INSTALLED IN LANDSCAPE AREAS WHEREVER POSSIBLE. 2. VERIFY POWER & WATER SOURCES WITH THE GENERAL CONTRACTOR. DO NOT INSTALL THE IRRIGATION SYSTEM AS SHOWN WHEN IT IS OBVIOUS THAT UNFORESEEN OBSTRUCTIONS, GRADE DIFFERENCES, OR DIFFERENCES IN AREA DIMENSIONS WOULD REQUIRE A CHANGE IN THE SYSTEM'S DESIGN. NOTIFY CAMPUS REPRESENTATIVE IMMEDIATELY UPON DISCOVERY OF ANY SUCH DISCREPANCIES. 3. COORDINATE PIPE & WIRE SLEEVE INSTALLATION WITH THE GENERAL CONTRACTOR. ~~4. LOCATE VALVE BOXES IN SHRUB AREAS WHENEVER POSSIBLE, OUT OF SIGHT OR PRIMARY VIEW.~~ 5. SUBSURFACE DRIP IRRIGATION SHALL BE BELOW GRADE. AVOID COVERAGE OF THE DRIP IRRIGATION WITH MULCH AND USE ONLY SOIL △2					

1918 Main Street, Third Floor
Santa Monica, California 90405
Telephone 310.557.7600

STRUCTURAL ENGINEER
SAIFUL BOUQUET
155 N LAKE AVE
PASADENA, CA 91101
626-304-2616

MECHANICAL & PLUMBING ENGINEER
STANTEC CONSULTING INC
14130 RIVERSIDE DR. # 201
SHERMAN OAKS, CA 91423
818-377-8220

ELECTRICAL ENGINEER
FBA ENGINEERING
150 PAULARINO AVE. #A120
COSTA MESA, CA 92626
949-852-9995

CIVIL ENGINEER
KPFF CONSULTING ENGINEERS
700 SOUTH FLOWER ST. #2100
LOS ANGELES, CA 90017
213-418-0201

LANDSCAPE ARCHITECT
LYNN CAPOUYA, INC.
17992 MITCHELL SOUTH, #110
IRVINE, CA 92614
949-756-0150

LABORATORY CONSULTANT
RESEARCH FACILITIES DESIGN
3965 FIFTH AVE. #400
SAN DIEGO, CA 92103
619-297-0159

SCIENCE CENTER
SANTA ANA COLLEGE

RANCHO SANTIAGO COMMUNITY COLLEGE DISTRICT

1530 W. 17TH ST.
SANTA ANA, CA 92706

SANTA ANA COLLEGE

I HEREBY CERTIFY THAT THIS PLAN, SPECIFICATION OR REPORT WAS PREPARED BY ME OR UNDER MY DIRECT SUPERVISION AND THAT I AM A DULY LICENSED LANDSCAPE ARCHITECT UNDER THE LAWS OF THE STATE OF CALIFORNIA

NAME: LYNN CAPOUYA
DATE: AUGUST 24, 2017
REGISTRATION NUMBER: 2314

NO	DESCRIPTION	DATE
2	Addendum 2	9/1/17

ISSUANCE HISTORY - THIS SHEET

DRAWN BY: JZ | REVIEW BY: KY

HGA NO: 3584-001-00

IRRIGATION LEGEND

DATE: JULY 06, 2017

L2.01

ADDENDA PACKAGE

©COPYRIGHT HAMMEL, GREEN AND ABRAHAMSON, INC.

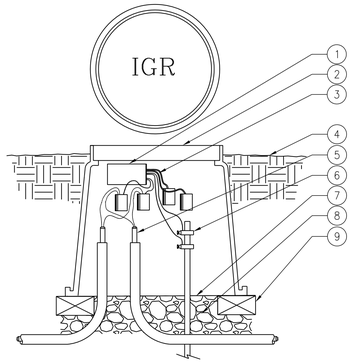

LEGEND:

1. 2-WIRE DECODER W/ WIRE CONNECTOR: 3M SCOTCH LOCK 3570
2. CARSON 10" ROUND PLASTIC VALVE BOX W/BOLT-DOWN COVER. HEAT BRAND "IGR" ON VALVE BOX LID IN 2" HIGH CHARACTERS.
3. WATER PROOF EACH WIRE CONNECTION WITH DRI-SPLICE DS-100 CONNECTOR AND DS-300 SEALANT
4. FINISH GRADE
5. 2 WIRE CONTROL CABLE – ALLOW 24 OF EXTRA WIRE IN VALVE BOX FOR EASY SERVICING.
6. 5/8"x8' GROUNDING ROD – INSTALL AT EVERY 300 FEET ON CENTER
7. 1/3"SQ 20GA. GALV. WELDED WIRE MESS
8. 3/4" GRAVEL (12" DEEP)
9. THREE (3) BRICK SUPPORTS

NOTES:

1. LOCATE GROUND AT EVERY 300 FEET ON CENTER.
2. ALL VALVE BOXES TO BE PLACED IN SHRUB AREAS WHERE POSSIBLE. SET VALVE BOX 1/2" ABOVE FINISH GRADE IN LAWN AREAS, 1" IN PLANTING AREAS AND 12" MIN FROM EDGE OF HARDSCAPE.

2-WIRE CABLE GROUNDING | SCALE: NTS | 1

The material must be Scotchcast™ 3570G epoxy resin. It must be packaged in the 3M Unipak™ two-part polyethylene bag. The resin must be mixed within the Unipak™ container simply by separating the barrier between the two parts of the bag and working the contents back and forth within the bag.

Installation

CAUTION:
Turn power off before installing connector, then make connection per manufacturer's instructions. All electrical work should be done according to appropriate electrical codes.

NOTE:
When temperature is below 50° F (10°C), keep resin in a warm place prior to mixing (for example, in an inside pocket next to the body).

1. Thoroughly clean and dry the surface of the substrate to which the material is desired to bond.

2. Remove guard bag, using caution not to damage inner bag.

3. Grip both edges of bag at the center barrier (FIG. 1) and wrinkle and flex the bag across the barrier. This will weaken the barrier.

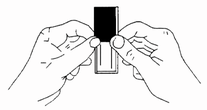

FIG. 1

4. Squeeze the clear side of the resin, forcing the resin through the center barrier.
5. Mix thoroughly to a uniform color by squeezing contents back and forth 25-30 times.
6. Squeeze resin to one end of bag, and cut off other end. (FIG. 2)

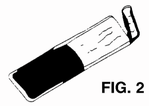

FIG. 2

7. Slowly insert connection into sealing pack until it fits snugly against the opposite end. (FIG. 3)

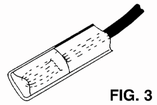

FIG. 3

8. Wrap open end of bag with Scotch® Super 33+ Vinyl Electrical Tape and position the taped end up until resin gels. (FIG. 4)

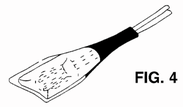

FIG. 4

Refer to Material Safety Data Sheet for health, safety and precautionary information, or call 800-364-3577.

WIRE CONNECTOR | SCALE: NTS | 2

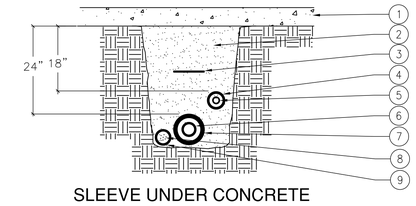

SLEEVE UNDER CONCRETE

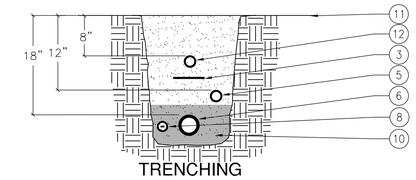

TRENCHING

LEGEND:

1. CONCRETE PAVING
2. SOIL BACKFILL
3. DETECTABLE UNDERGROUND TAPE
4. NON-PRESSURE LATERAL
5. PVC LATERAL SLEEVE
6. PRESSURE PVC MAINLINE
7. PVC MAINLINE SLEEVE
8. 2-WIRE CABLE INSTALLED IN 1 ¼" PVC ELECTRICAL CONDUIT-CONTINUOUS RUN.
9. PVC CONTROL WIRE SLEEVE
10. SAND BACKFILL, 4" BELOW AND 6" ABOVE MAINLINE
11. FINISH GRADE
12. LOW FLOW SYSTEM LATERAL

NOTE:

1. PROVIDE A 20 INCH LOOP IN WIRE @ ALL CHANGES IN DIRECTION GREATER THAN 30 DEGREE. REMOVE TIES AFTER ALL CONNECTIONS HAVE BEEN MADE.

TRENCHING & SLEEVING | SCALE: NTS | 3

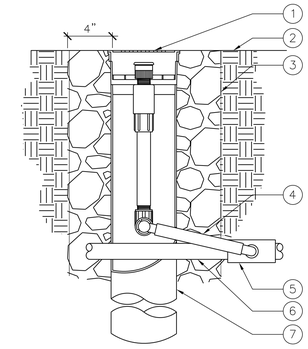

LEGEND:

1. LOCKABLE ROOT WATERING SYSTEM (RWS) GRATE
2. FINISH GRADE
3. FILTER FABRIC WITH PEA GRAVEL BACKFILL 4" AROUND CANISTER
4. RWS SWING JOINT
5. PVC SCH. 40 TEE OR EL.
6. LATERAL PIPE.
7. ROOT WATERING SYSTEM (RWS) CANISTER.

NOTES:

1. MARLEX STREET ELLS SHALL NOT BE USED AS A SUBSTITUTE FOR PVC SCH. 40 STREET ELLS.
2. ANTI-DRAIN VALVE SHALL PREVENT LOW HEAD DRAINAGE OF UP TO TEN (10) FEET OF ELEVATION DIFFERENCE

ROOT ZONE WATERING SYSTEM | SCALE: NTS | 4

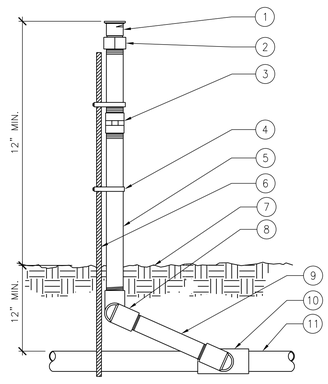

LEGEND:

1. SPRAY NOZZLE PER LEGEND.
2. NOZZLE ADAPTER
3. ANTI-DRAIN VALVE WHEN REQUIRED
4. V.I.T. TWIST TIE BANDS (TYP), 2 REQ. (TOP FASTENER SHALL SECURE HEAD).
5. PVC SCH. 80 NIPPLE LENGTH REQUIRED
6. #4 X 30" REBAR (TYP) INSTALL TO JUST BELOW NOZZLE.
7. FINISH GRADE.
8. PVC SCH. 40 STREET ELLS (3) THREE REQUIRED.
9. PVC SCH. 80 NIPPLE LENGTH AS REQUIRED. SWING JOINT ASSEMBLY.
10. PVC LATERAL LINE FITTING.
11. PVC LATERAL LINE.

NOTES:
1. MARLEX STREET ELLS SHALL NOT BE USED AS A SUBSTITUTE FOR PVC SCH. 40 STREET ELLS.
2. ANTI-DRAIN VALVE SHALL BE PROVIDED TO PREVENT LOW HEAD DRAINAGE OF UP TO TEN (10) FEET OF ELEVATION DIFFERENCE.

SPRAY HEAD ON GRADE | SCALE: NTS | 5

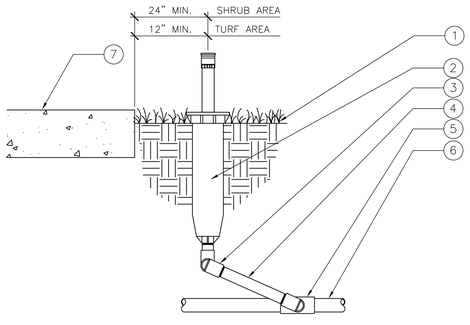

LEGEND:

1. FINISH GRADE.
2. SPRINKLER HEAD PER LEGEND.
3. PVC SCH. 40 STREET ELL THREE (3) REQUIRED.
4. PVC SCH. 80 NIPPLE LENGTH AS REQUIRED. SWING JOINT ASSEMBLY.
5. PVC SCH. 40 FITTING.
6. LATERAL LINE.
7. ADJACENT HARDSCAPE

NOTES:
1. MARLEX STREET ELLS SHALL NOT BE USED AS A SUBSTITUTE FOR PVC SCH. 40 STREET ELLS.
2. ANTI-DRAIN VALVE SHALL PREVENT LOW HEAD DRAINAGE OF UP TO TEN (10) FEET OF ELEVATION DIFFERENCE

POP-UP SPRAY HEAD | SCALE: NTS | 6

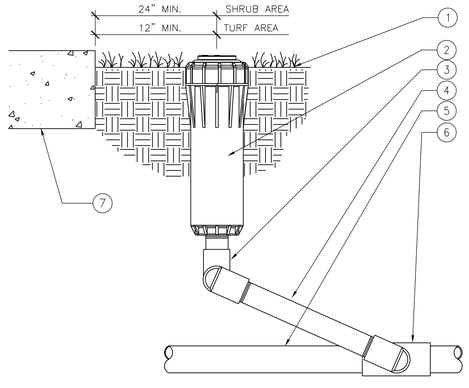

LEGEND:

1. FINISH GRADE
2. ROTOR HEAD PER LEGEND.
3. PVC SCH. 40 STREET ELL THREE (3) REQUIRED
4. PVC SCH. 80 NIPPLE LENGTH AS REQUIRED.
5. LATERAL LINE
6. PVC SCH. 40 FITTING
7. ADJACENT HARDSCAPE

NOTES:
1. MARLEX STREET ELLS SHALL NOT BE USED AS A SUBSTITUTE FOR PVC SCH. 40 STREET ELLS.
2. ANTI-DRAIN VALVE SHALL PREVENT LOW HEAD DRAINAGE OF UP TO TEN (10) FEET OF ELEVATION DIFFERENCE

△2

POP-UP ROTOR | SCALE: NTS | 7

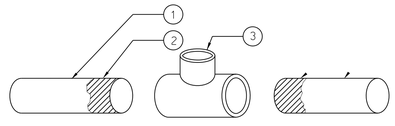

LEGEND:

1. LATERAL PIPE
2. APPLY GLUE TO PIPE END ONLY
3. TEE OR ELL FITTING FOR DRIP ASSEMBLY

THE PROPER METHOD FOR GLUING DRIP SYSTEM LATERAL PIPE

TO AVOID GLUE BUILD UP AND DEBRIS INSIDE THE PIPE THAT CAN CLOG THE EMITTERS, FOLLOW THE FOLLOWING METHOD.

1. APPLY GLUE ON THE LATERAL END ONLY, DO NOT APPLY GLUE IN THE FITTING.

2. DO NOT USE SAW TO CUT PIPE. USE PVC PIPE CUTTER ONLY.

METHOD FOR GLUING DRIP PVC LATERAL | SCALE: NTS | 8

hga.
1918 Main Street, Third Floor
Santa Monica, California 90405
Telephone 310.557.7600

STRUCTURAL ENGINEER
SAIFUL BOUQUET
155 N LAKE AVE
PASADENA, CA 91101
626-304-2616

MECHANICAL & PLUMBING ENGINEER
STANTEC CONSULTING INC
14130 RIVERSIDE DR. # 201
SHERMAN OAKS, CA 91423
818-377-8220

ELECTRICAL ENGINEER
FBA ENGINEERING
150 PAULARINO AVE. #A120
COSTA MESA, CA 92626
949-852-9995

CIVIL ENGINEER
KPFF CONSULTING ENGINEERS
700 SOUTH FLOWER ST. #2100
LOS ANGELES, CA 90017
213-418-0201

LANDSCAPE ARCHITECT
LYNN CAPOUYA, INC.
17992 MITCHELL SOUTH, #110
IRVINE, CA 92614
949-756-0150

LABORATORY CONSULTANT
RESEARCH FACILITIES DESIGN
3965 FIFTH AVE. #400
SAN DIEGO, CA 92103
619-297-0159

SCIENCE CENTER
SANTA ANA COLLEGE
RANCHO SANTIAGO COMMUNITY COLLEGE DISTRICT
1530 W. 17TH ST.
SANTA ANA, CA 92706

SANTA ANA COLLEGE

I HEREBY CERTIFY THAT THIS PLAN, SPECIFICATION OR REPORT WAS PREPARED BY ME OR UNDER MY DIRECT SUPERVISION AND THAT I AM A DULY LICENSED LANDSCAPE ARCHITECT UNDER THE LAWS OF THE STATE OF CALIFORNIA.

LICENSED ARCHITECT — LYNN G. MAYNE — No. 2314 — EXPIRATION DATE: SEPTEMBER 30, 2017 — STATE OF CALIFORNIA

REGISTERED LANDSCAPE ARCHITECT — LYNN CAPOUYA — No. 2314 — EXPIRATION DATE: 08/31/2018 — STATE OF CALIFORNIA

NAME: LYNN CAPOUYA
DATE: AUGUST 24, 2017
REGISTRATION NUMBER: 2314

NO	DESCRIPTION	DATE
2	Addendum 2	9/1/17

ISSUANCE HISTORY - THIS SHEET

DRAWN BY: JZ | REVIEW BY: KY

HGA NO: 3584-001-00

IRRIGATION DETAILS

DATE: JULY 06, 2017

L2.03

ADDENDA PACKAGE

©COPYRIGHT HAMMEL, GREEN AND ABRAHAMSON, INC.

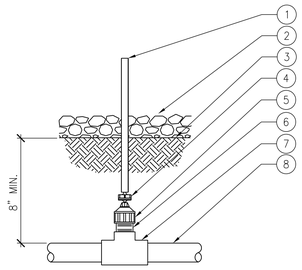

LEGEND:

1. RAIN BIRD POLYFLEX RISER
2. TOP OF ROCK MULCH
3. FINISH GRADE
4. RAIN BIRD PC-05, 5 GPH PRESSURE COMPENSATING EMITTER
5. RAIN BIRD 10-32A THREAD ADAPTER
6. PVC SCH 80 NIPPLE
7. PVC SCH 40 TEE OR ELL
8. PVC LATERAL PIPE

EMITTER ASSEMBLY @ ROCK MULCH | SCALE: NTS | 1

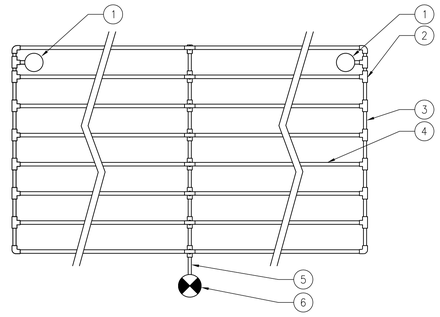

1. FLUSH AND AIR RELIEF VALVE ASSEMBLY IN A 10" ROUND VALVE BOX
2. PVC TO COMPRESSION FITTING
3. PVC EXHAUST HEADER
4. DRIP TUBING
5. PVC SUPPLY PIPE FROM VALVE
6. DRIP VALVE ASSEMBLY

DRIPLINE LAYOUT | SCALE: NTS | 2

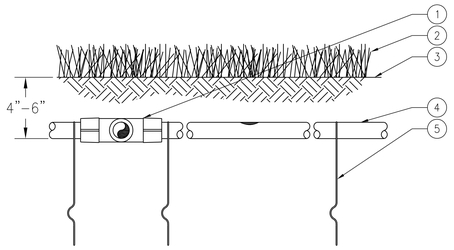

1. COMPRESSION FITTING
2. TURF OR SHRUB BED
3. FINISH GRADE
4. SUB-SURFACE DRIPLINE
5. DRIPLINE TIE DOWN STAKE

NOTES:

1. PLACE TIE DOWN STAKES EVERY THREE FEET IN SAND, FOUR FEET IN LOAM, AND FIVE FEET IN CLAY.
2. AT FITTINGS WHERE THERE IS A CHANGE OF DIRECTION SUCH AS TEES OR ELBOWS, USE TIE-DOWN STAKES ON EACH LEG OF THE CHANGE OF DIRECTION.
3. INSERTION PLOW AND TRENCHED INSTALLATIONS DO NOT REQUIRE TIE DOWN STAKES.

SUB-SURFACE DRIPLINE | SCALE: NTS | 3

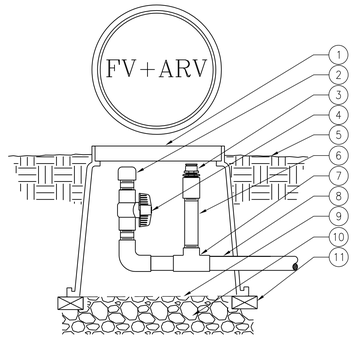

LEGEND:

1. CARSON 10" ROUND PLASTIC VALVE BOX W/BOLT-DOWN COVER. HEAT BRAND "ARV+FV" ON VALVE BOX LID IN 2" HIGH CHARACTERS.
2. 1/2" THREADED PVC CAP
3. AIR RELEASE VALVE
4. 1/2" SCH 40 BALL VALVE
5. FINISH GRADE
6. PVC SCH 80 NIPPLE
7. PVC SCH 40 TEE
8. PVC LATERAL
9. 3 MESH (3 SQ/IN) 20GA. GALV. WELDED WIRE MESH
10. 3/4" GRAVEL (12" DEEP)
11. THREE (3) BRICK SUPPORTS

NOTES:

1. ALL VALVE BOXES TO BE PLACED IN SHRUB AREAS WHERE POSSIBLE. SET VALVE BOX 1/2" ABOVE FINISH GRADE IN LAWN AREAS, 1" IN PLANTING AREAS AND 12" MIN FROM EDGE OF HARDSCAPE.
2. CLOSED NIPPLES OR BUSHINGS ARE NOT ALLOWED.
3. USE TEFLON TAPE BETWEEN TWO DISSIMILAR MATERIALS.
4. LANDSCAPE FABRIC SHALL BE USED TO PLUG BETWEEN PIPES AND VALVE BOX WALL OPENINGS TO PREVENT SOIL INTRUSION.
5. GALVANIZED NIPPLE SHALL NOT BE USED.

MANUAL FLUSH VALVE & AIR RELEASE VALVE | SCALE: NTS | 4

Zone/ Station	Area SqFt	Sprinkler Type	Zone Flow Rate	Precipitation Rate	Sprinkler Dist. Unif.	Plant Material	Hydrozone/ Microclimate	Hydrozone/ Microclimate	Crop Coefficient	Crop Coefficient
			(gpm)	(in/hr)	(%)			Factor	Type	Value
1	1667	Drip	12	0.71	0.85	Shrub	East	0.85	L	0.20
2	72	Bubbler	2	2.67	0.80	Tree	South	0.95	L	0.20
3	1138	Drip	8	0.71	0.85	Shrub	South	0.95	L	0.20
4	1554	Drip	12	0.71	0.85	Shrub	South	0.95	L	0.20
5	462	Drip	3	0.71	0.85	Shrub	South	0.95	L	0.20
6	659	Drip	5	0.71	0.85	Shrub	Shade	0.55	L	0.20
7	1188	Drip	9	0.71	0.85	Shrub	Shade	0.55	L	0.20
8	433	Drip	3	0.71	0.85	Shrub	Shade	0.55	L	0.20
9	612	Drip	5	0.71	0.85	Shrub	North	0.65	L	0.20
10	4126	Stream Spray	41	0.96	0.75	Shrub	North	0.65	L	0.20
11	126	Bubbler	3.5	2.67	0.80	Tree	Shade	0.55	L	0.20
12	1292	Drip	10	0.71	0.85	Shrub	North	0.65	L	0.20
13	1669	Drip	12	0.71	0.85	Shrub	Shade	0.55	L	0.20
14	2514	Stream Spray	24	0.92	0.75	Shrub	South	0.95	L	0.20
15	1362	Drip	10	0.71	0.85	Shrub	South	0.95	L	0.20
16	4073	Rotor	28	0.66	0.75	Shrub	Full Sun	1.00	L	0.20
17	5836	Rotor	42	0.69	0.75	Shrub	Full Sun	1.00	L	0.20
18	4828	Rotor	30	0.60	0.75	Shrub	Full Sun	1.00	L	0.20
19	5396	Rotor	39	0.70	0.75	Turf	Full Sun	1.00	H	0.80
20	4852	Rotor	32	0.63	0.75	Shrub	Full Sun	1.00	L	0.20
21	5433	Rotor	36	0.64	0.75	Shrub	Full Sun	1.00	L	0.20
22										
23										
24										
25										
26										
27										
28										
29										
30										
31										
32										
33										
34										
35										
36										
37										
38										
39										
40										
41										
42										
43										
44										
45										
46										
47										
48										

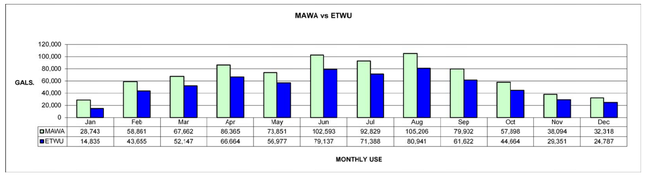

RECOMMENDED IRRIGATION SCHEDULING FOR (ESTABLISHED) PERIOD

Plan Material	Irrigation Days Per Week											
	Jan	Feb	Mar	Apr	May	Jun	Jul	Aug	Sep	Oct	Nov	Dec
Turf	1	2	2	2	3	3	3	3	2	2	1	1
Shrub	1	1	1	1	1	1	1	1	1	1	1	1
Tree	1	1	1	1	1	1	1	1	1	1	1	1

Zone/ Station	Runtime Per Irrigation Day											
	Jan	Feb	Mar	Apr	May	Jun	Jul	Aug	Sep	Oct	Nov	Dec
	(min)	(min)	(min)	(min)	(min)	(min)	(min)	(min)	(min)	(min)	(min)	(min)
1	17	17	19	25	21	29	27	30	23	17	11	9
2	3	5	6	8	7	7	7	7	7	7	7	7
3	9	19	22	28	24	33	30	34	26	18	12	10
4	9	19	22	28	24	33	30	34	26	18	12	10
5	9	19	22	28	24	33	30	34	26	18	12	10
6	5	11	13	16	14	19	17	19	15	11	7	6
7	5	11	13	16	14	19	17	19	15	11	7	6
8	5	11	13	16	14	19	17	19	15	11	7	6
9	6	13	15	19	16	22	20	23	17	13	8	7
10	5	10	12	15	13	18	16	18	14	10	7	6
11	1	3	3	4	4	4	4	4	4	4	4	4
12	6	13	15	19	16	22	20	23	17	13	8	7
13	5	11	13	16	14	19	17	19	15	11	7	6
14	8	16	18	23	20	27	25	28	21	15	10	9
15	9	19	22	28	24	33	30	34	26	18	12	10
16	11	23	26	33	29	40	36	41	31	22	15	13
17	11	22	25	32	27	38	34	39	30	21	14	12
18	12	25	29	37	32	44	40	45	34	25	16	14
19	42	43	50	64	38	50	46	52	59	43	56	48
20	12	24	27	35	30	41	38	43	32	23	15	13
21	12	24	27	35	30	41	37	42	32	23	15	13
22												
23												
24												
25												
26												
27												
28												
29												
30												
31												
32												
33												
34												
35												
36												
37												
38												
39												
40												
41												
42												
43												
44												
45												
46												
47												
48												
Total Min / Day	204	356	409	523	429	592	536	606	483	353	264	225
Total Hrs / Day	3	6	7	9	7	10	9	10	8	6	4	4

THIS IRRIGATION SCHEDULE IS MEANT TO BE USED AS A GUIDELINE ONLY, AND DOES NOT TAKE THE PLACE OF PROPER, ONGOING SYSTEM MANAGEMENT.

2

LANDSCAPE WATER USE ANALYSIS AND RECOMMENDED IRRIGATION SCHEDULING | SCALE: NTS | 8

HGA

1918 Main Street, Third Floor
Santa Monica , California 90405
Telephone 310.557.7600

STRUCTURAL ENGINEER
SAIFUL BOUQUET
155 N LAKE AVE
PASADENA, CA 91101
626-304-2616

MECHANICAL & PLUMBING ENGINEER
STANTEC CONSULTING INC
14130 RIVERSIDE DR. # 201
SHERMAN OAKS, CA 91423
818-377-8220

ELECTRICAL ENGINEER
FBA ENGINEERING
150 PAULARINO AVE. #A120
COSTA MESA, CA 92626
949-852-9995

CIVIL ENGINEER
KPFF CONSULTING ENGINEERS
700 SOUTH FLOWER ST. #2100
LOS ANGELES, CA 90017
213-418-0201

LANDSCAPE ARCHITECT
LYNN CAPOUYA, INC.
17992 MITCHELL SOUTH, #110
IRVINE, CA 92614
949-756-0150

LABORATORY CONSULTANT
RESEARCH FACILITIES DESIGN
3965 FIFTH AVE. #400
SAN DIEGO, CA 92103
619-297-0159

SCIENCE CENTER
SANTA ANA COLLEGE
RANCHO SANTIAGO COMMUNITY COLLEGE DISTRICT
1530 W. 17TH ST.
SANTA ANA, CA 92706

SANTA ANA COLLEGE

I HEREBY CERTIFY THAT THIS PLAN, SPECIFICATION OR REPORT WAS PREPARED BY ME OR UNDER MY DIRECT SUPERVISION AND THAT I AM A DULY LICENSED LANDSCAPE ARCHITECT UNDER THE LAWS OF THE STATE OF CALIFORNIA.

LICENSED ARCHITECT — LYNN S. MAY CAPOUYA — No. 2314 — REGISTERED LANDSCAPE ARCHITECT — SEPTEMBER 30, 2017 — RENEWAL DATE — STATE OF CALIFORNIA

LICENSED LANDSCAPE ARCHITECT — LYNN CAPOUYA — No. 2314 — REGISTERED LANDSCAPE ARCHITECT — RENEWAL DATE 08/31/2017 — STATE OF CALIFORNIA

NAME: LYNN CAPOUYA
DATE: AUGUST 24, 2017
REGISTRATION NUMBER: 2314

NO	DESCRIPTION	DATE
2	Addendum 2	9/1/17

ISSUANCE HISTORY - THIS SHEET

DRAWN BY: JZ | REVIEW BY: KY

HGA NO: 3584-001-00

IRRIGATION DETAILS & WATER USE ANALYSIS

DATE: JULY 06, 2017

L2.04

ADDENDA PACKAGE

©COPYRIGHT HAMMEL, GREEN AND ABRAHAMSON, INC.

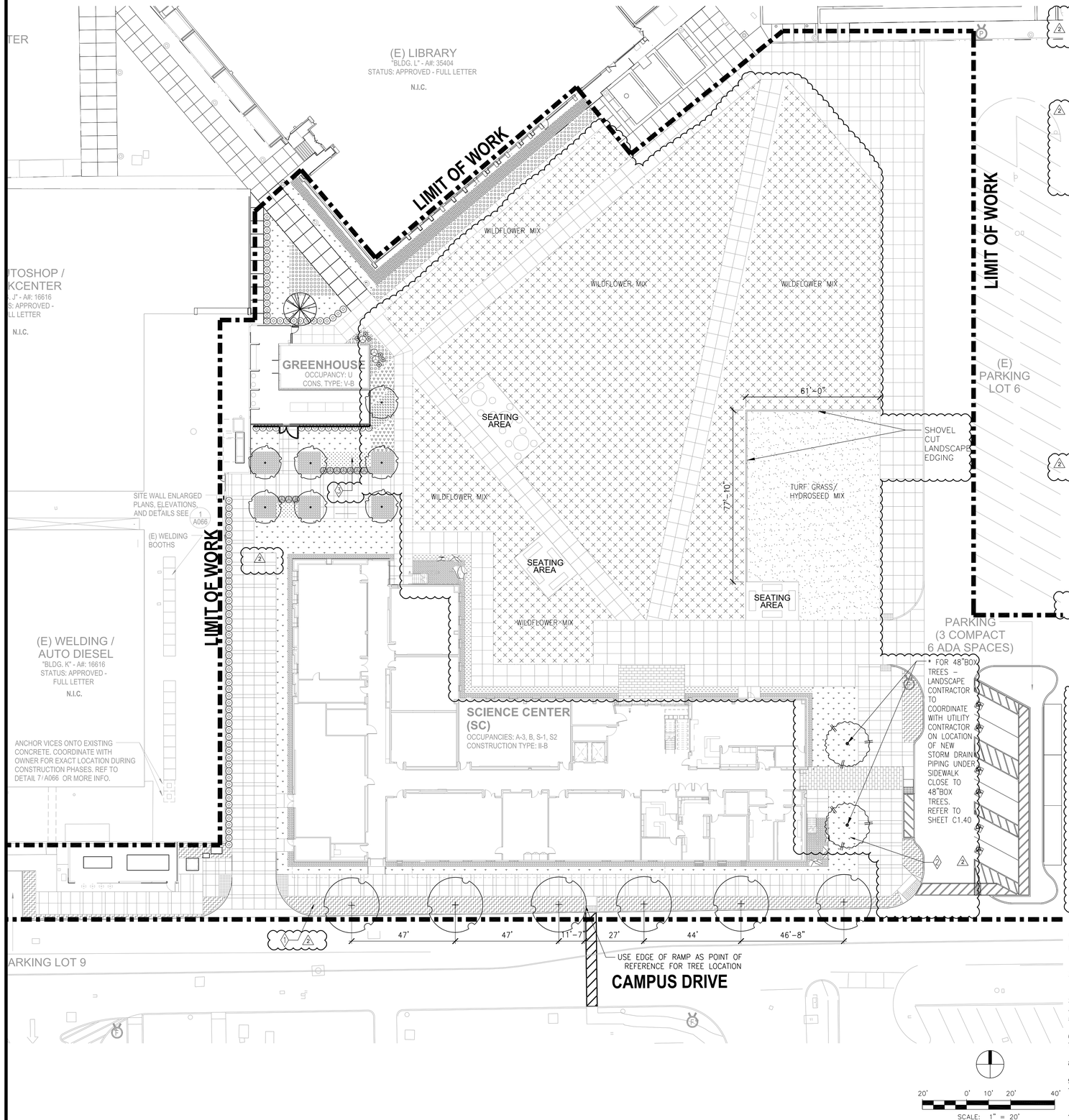

PLANTING LEGEND

TREES

SYMBOL	BOTANICAL NAME COMMON NAME	SIZE	QUANTITY/ EACH	DETAIL	SHEET	REMARKS	WUCOLS PLANT FACTOR
	ARBUTUS UNEDO STRAWBERRY MADRONE	36" BOX	7	2,4	L3.02	STANDARD TRUNK SPACING PER PLAN ROOT BARRIERS REQUIRED	LOW
	QUERCUS ILEX HOLLY OAK	48" BOX	2	2,4	L3.02	STANDARD TRUNK, SPACING PER PLAN ROOT BARRIERS REQUIRED	LOW
2	NOT USED						
	NOT USED						
	TRISTANIA (LOPHOSTEMON) CONFERTA BRISBANE BOX	36" BOX	6	4,6	L3.02	STANDARD TRUNK, SPACING PER PLAN, TRIM CANOPY TO 7'-0" HIGH. ALL TRISTANIA TREES TO HAVE 48" LONG ROOT BARRIERS TO AVOID ADJACENT UTILITIES. VERIFY UTILITIES BEFORE PLANTING.	MEDIUM
	EXISTING TREE TO BE PROTECTED IN PLACE		1	7	L3.02		

SCREEN SHRUBS

SYMBOL	BOTANICAL NAME COMMON NAME	SIZE	QUANTITY/ EACH	DETAIL	SHEET	REMARKS	WUCOLS PLANT FACTOR
	OLEA EUROPAEA 'LITTLE OLLIE' LITTLE OLLIE OLIVE	5 GAL.	96	5	L3.02	SPACING 3'-0" O.C. ALIGN IN ROWS	LOW

SHRUBS/GROUNDCOVERS

SYMBOL	BOTANICAL NAME COMMON NAME	SIZE	QUANTITY/ EACH	DETAIL	SHEET	REMARKS	WUCOLS PLANT FACTOR
	AGAVE DESMETIANA SMOOTH AGAVE	5 GAL.	13	5	L3.02	SPACING PER PLAN	VERY LOW
	AGAVE 'BLUE GLOW' BLUE AGAVE	5 GAL.	6	5	L3.02	SPACING PER PLAN	VERY LOW
2	NOT USED						
	CARISSA MACROCARPA 'GREEN CARPET GREEN CARPET NATAL PLUM	1 GAL.	65	3,5	L2.02	SPACING 2' O.C.	LOW
	CISTANTHE GRANDIFLORA ROCK PURSLANE – CALANDRINIA	1 GAL.	264	3,5	L3.02	SPACING 1'-6" O.C.	LOW
	HESPERALOE PARVIFLORA 'PERPA' BRAKELIGHTS RED YUCCA BID ALT: ANIGOZANTHOS R. 'BACKDRAFT' RED KANGAROO PAW	1 GAL.	105	3,5	L3.02	SPACING 1'-6" O.C.	VERY LOW
	LANTANA MONTEVIDENSIS PURPLE TRAILING LANTANA	1 GAL.	125	3,5	L3.02	SPACING 3' O.C.	LOW
	LOBELIA LAXIFLORA MEXICAN LOBELIA	1 GAL.	146	3,5	L3.02	SPACING 2' O.C.	LOW
	MYOPORUM PARVIFOLIUM 'PUTAH CREEK' CREEPING MYOPORUM	1 GAL.	655	3,5	L3.02	SPACING 2' O.C.	LOW
	MYRTUS COMMUNIS 'COMPACTA' DWARF MYRTLE	1 GAL.	1,280	3,5	L3.02	SPACING 2' O.C.	LOW
	BOUTELOUA GRACILIS 'BLONDE AMBITION' BLONDE AMBITION BLUE GRAMA GRASS	1 GAL.	35	3,5	L3.02	SPACING 2' O.C.	LOW

TURF

SYMBOL	HYDROSEED MIX	PER SQ.FT.	REMARK	WUCOLS PLANT FACTOR
	STOVER SEED TRIPLE CROWN EXTREME SPECIFICATIONS: 50% AQUAVITA TALL FESCUE 50% RHAMBLER SRP TALL FESCUE	5,400 SQ.FT.	SEEDING RATE: 450 LBS/ACRE	LOW

WILDFLOWER SEED MIX - LOW GROWING GROUND COVER

SYMBOL	WILDFLOWER SEED MIX		PER SQ.FT.	REMARK		WUCOLS PLANT FACTOR
	BOTANICAL NAMES	COMMON NAME	31,500 SQ.FT.	% PURITY	% GERM	
	ACHILLEA MILLEFOLIUM WHITE	WHITE YARROW		98.00	80.00	LOW
	ESCHSCHOLZIA CALIFORNICA	CALIFORNIA POPPY		98.00	75.00	LOW
	TRIFOLIUM OBTUSIFLORUM	CLAMMY CLOVER		98.00	45.00	LOW
	PENSTEMON SPECTABILIS	SHOWY PENSTEMON		95.00	75.00	LOW
	SALVIA COLUMBARIAE	CHIA		90.00	60.00	LOW
	MIMULUS (AURAUNTIACUS) LONGIFLORUS	STICKY MONKEY FLOWER		2.00	55.00	LOW
	LUPINUS TRUNCATUS	COLLAR LUPINE		98.00	85.00	LOW
	NASSELLA (STIPA) LEPIDA	FOOTHILL NEEDLEGRASS		90.00	60.00	LOW
	NASSELLA (STIPA) CERNUA	NODDING STIPA		90.00	70.00	LOW

* CONTRACTOR TO VERIFY EXACT QUANTITIES OF PLANT MATERIALS BASED ON CONDITIONS AND PLANT MATERIALS COVERAGE

GENERAL PLANTING NOTES

1. ALL TREE & SHRUB MATERIAL SPECIFIED MUST MEET STANDARD INDUSTRY SPECIFICATIONS FOR THE CONTAINER SIZE INDICATED. IF CONTRACTOR CANNOT LOCATE MATERIAL OF ACCEPTABLE SIZE AT THE TIME OF INSTALLATION, CONTACT LANDSCAPE ARCHITECT FOR SPECIES SUBSTITUTION; DOWN-SIZING OR SUBSTITUTION OF PLANT MATERIAL WITHOUT PRIOR APPROVAL OF LANDSCAPE ARCHITECT WILL NOT BE ALLOWED.
2. TREE LOCATIONS SHOWN ON PLAN MAY REQUIRE ADJUSTMENT IN THE FIELD. WHENEVER FEASIBLE, TREES SHOULD BE PLANTED A MINIMUM OF TEN (10) FEET FROM ALL UNDERGROUND UTILITIES AND OUT OF DRAINAGE FLOW LINES AND 3' FROM SPRAY HEADS. SHOULD THIS NOT BE POSSIBLE, CONTACT THE LANDSCAPE ARCHITECT FOR DECISION ON PLACEMENT.
3. VERIFY LOCATION AND DEPTH OF ALL UNDERGROUND UTILITIES PRIOR TO START OF WORK.
4. AFTER IRRIGATION SYSTEM INSTALLATION AND FINISH GRADES HAVE BEEN ESTABLISHED, PERFORM WEED CONTROL AS RECOMMENDED IN THE SPECIFICATIONS.
5. LANDSCAPE ARCHITECT SHALL HAVE THE OPPORTUNITY TO INSPECT AND APPROVE ALL SPECIMEN AND BOX MATERIALS AT THE NURSERY PRIOR TO PLANTING. (24" BOX OR LARGER)
6. LANDSCAPE ARCHITECT SHALL HAVE THE OPPORTUNITY TO INSPECT ALL PLANT MATERIALS AT THE JOB SITE PRIOR TO PLANTING.
7. UPON COMPLETION OF PLANTING, THE CONTRACTOR SHALL ARRANGE FOR A SUBSTANTIAL COMPLETION INSPECTION BY THE LANDSCAPE ARCHITECT. CONTRACTOR SHALL CORRECT ANY DISCREPANCIES FOUND PRIOR TO FINAL INSPECTION AND ACCEPTANCE OF THE PROJECT.
8. A REPRESENTATIVE SAMPLE OF THE BOTANICAL NAME TAGS FURNISHED BY THE NURSERY STOCK SUPPLIER SHALL REMAIN ATTACHED TO THE PLANTS UNTIL FINAL INSPECTION.
9. FINISH GRADE IN ALL PLANTER AREAS SHALL BE 3 INCHES BELOW FINISH SURFACE OF SURROUNDING HARDSCAPE AND/OR UTILITY BOXES.
10. WHERE IT IS OBVIOUS IN THE FIELD THAT CONDITIONS DEVIATE FROM WHAT IS INDICATED ON THE PLANS, IT IS THE RESPONSIBILITY OF THE CONTRACTOR TO NOTIFY THE LANDSCAPE ARCHITECT OF THESE DISCREPANCIES. IN THE EVENT THIS NOTIFICATION IS NOT PERFORMED, THE CONTRACTOR SHALL ASSUME ALL RESPONSIBILITY FOR ANY NECESSARY
11. INSTALL 4 INCHES MINIMUM THICK LAYER SHREDDED BARK MULCH OVER WEED BARRIER IN ALL NEWLY PLANTED AREAS.
12. USE ROOT BARRIER IF CENTER OF TREE TRUNK IS WITHIN 15' OF ANY CURBS, SIDEWALKS, OR OTHER HARDSCAPE MATERIALS.

AGRONOMICS SOIL TESTING SHALL BE PERFORMED ON THE SITE FROM LOCATIONS INDICATED.
THREE (3) TESTING SITES HAVE BEEN IDENTIFIED AND ALL RESULTS SHALL BE INCORPORATED INTO THE WORK ON THIS PROJECT.

(#) — INDICATES SAMPLE NUMBER
— INDICATES SAMPLE SITE

TESTING TO BE PERFORMED SHALL BE DETERMINED BY QUALIFIED LABORATORY PER SPECIFICATIONS. REPORT IS TO BE OBTAINED AND PAID FOR BY THE CONTRACTOR. FOR ADDITIONAL SOIL TESTING INFORMATION REFER TO SPECIFICATIONS.

hga.
1918 Main Street, Third Floor
Santa Monica, California 90405
Telephone 310.557.7600

STRUCTURAL ENGINEER
SAIFUL BOUQUET
155 N LAKE AVE
PASADENA, CA 91101
626-304-2616

MECHANICAL & PLUMBING ENGINEER
STANTEC CONSULTING INC
14130 RIVERSIDE DR. # 201
SHERMAN OAKS, CA 91423
818-377-8220

ELECTRICAL ENGINEER
FBA ENGINEERING
150 PAULARINO AVE. #A120
COSTA MESA, CA 92626
949-852-9995

CIVIL ENGINEER
KPFF CONSULTING ENGINEERS
700 SOUTH FLOWER ST. #2100
LOS ANGELES, CA 90017
213-418-0201

LANDSCAPE ARCHITECT
LYNN CAPOUYA, INC.
17992 MITCHELL SOUTH, #110
IRVINE, CA 92614
949-756-0150

LABORATORY CONSULTANT
RESEARCH FACILITIES DESIGN
3965 FIFTH AVE. #400
SAN DIEGO, CA 92103
619-297-0159

SCIENCE CENTER
SANTA ANA COLLEGE
RANCHO SANTIAGO COMMUNITY COLLEGE DISTRICT
1530 W. 17TH ST.
SANTA ANA, CA 92706

SANTA ANA COLLEGE

I HEREBY CERTIFY THAT THIS PLAN, SPECIFICATION OR REPORT WAS PREPARED BY ME OR UNDER MY DIRECT SUPERVISION AND THAT I AM A DULY LICENSED LANDSCAPE ARCHITECT UNDER THE LAWS OF THE STATE OF CALIFORNIA.

LICENSED LANDSCAPE ARCHITECT — LYNN G. MAYNE — No. 2314 — SEPTEMBER 30, 2017 — RENEWAL DATE — STATE OF CALIFORNIA

CERTIFIED LANDSCAPE ARCHITECT — LYNN CAPOUYA — No. 2314 — REGISTERED LANDSCAPE ARCHITECT — STATE OF CALIFORNIA

NAME: LYNN CAPOUYA
DATE: AUGUST 24, 2017
REGISTRATION NUMBER: 2314

NO	DESCRIPTION	DATE
2	Addendum 2	9/1/17

ISSUANCE HISTORY - THIS SHEET

DRAWN BY: | REVIEW BY:

HGA NO: 3584-001-00

PLANTING PLAN

DATE: JULY 06, 2017

L3.01

ADDENDA PACKAGE

©COPYRIGHT HAMMEL, GREEN AND ABRAHAMSON, INC.

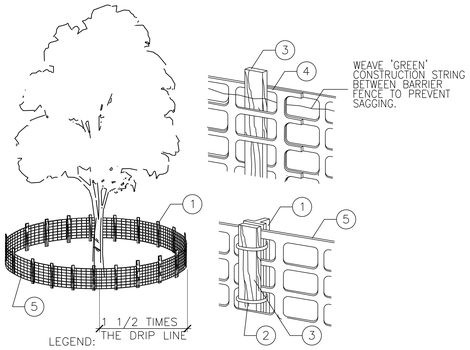

LEGEND:

1. 1" METAL "T" POST (6' LONG, 2' INTO GROUND AT 10' O.C. MAX)
2. WIRE OR PLASTIC CABLE TIES
3. 1"X2" WOOD SLAT (WEAVE THROUGH OVERLAPPED SECTIONS)
4. OVERLAP (ONE FULL SECTION)
5. GREEN PLASTIC BARRIER FENCE

LEGEND:

1. PLASTIC BARRIER FENCE TO BE MADE WITH POLYPROPYLENE AND MEDIUM GRADE MATERIAL.
2. TENSION PROTECTIVE FENCING BY HAND ONLY, NO MECHANICAL TENSION WILL BE PERMITTED.
3. REFER TO SECTION 329000 PLANTING, EXISTING TREE PROTECTION.
4. PLACE 10" OF NURSERY MULCH THROUGHOUT THE DRIP-LINE ZONES IF ACCESS UNDER TREE IS NECESSARY. AVOID TURNING THE EQUIPMENT WITHIN THE DRIP-LINE ZONES. REMOVE MULCH AT THE END OF THE PROJECT.
5. ANY WORK REQUIRED UNDER TREES SHALL BE DONE BY HAND TOOLS, NO MECHANICAL EQUIPMENTS ARE ALLOW.

EXISTING TREE PROTECTION | SCALE: NTS | 7

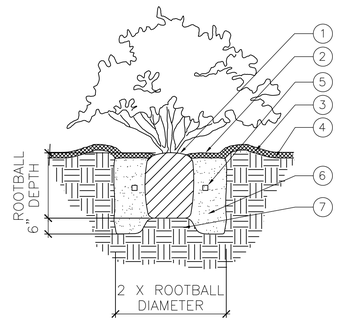

LEGEND:

1. ROOTBALL CROWN SHALL BE 1" ABOVE FINISH GRADE AVOID PLANTING SHRUBS DIRECTLY IN FRONT OF IRRIGATION SPRAY HEADS PROVIDE CLEARANCE WHEN POSSIBLE.
2. 4" MULCH, REFER TO SPECS.
3. 3" HIGH WATER RETENTION BASIN FROM PLANT PIT EXCAVATION. MAY BE RANKED OUT PRIOR TO OTHER WORK AS DIRECTED BY LANDSCAPE ARCHITECT.
4. FINISH GRADE.
5. FERTILIZER TABLETS PER SOIL REPORT.
6. PREPARED BACKFILL PER SOIL REPORT.
7. 6" ZONE OF OVER-EXCAVATED AND RECOMPACTED NATIVE SOIL.

SHRUB PLANTING | SCALE: NTS | 5

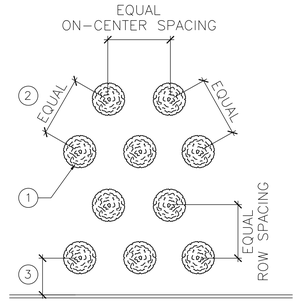

LEGEND:

1. TRIANGULAR SPACING. LOCATE PLANTS WITH EQUAL SPACING AS INDICATED IN THE PLANTING LEGEND.
2. SPACING AS INDICATED IN THE PLANTING LEGEND.
3. 1/2 ON-CENTER SPACING. PAVING, BUILDING OR MOWSTRIP - SHOWING PLANTING AREA LIMIT.

GROUND COVER SPACING | SCALE: NTS | 3

NOT USED | SCALE: NTS | 1

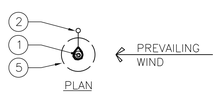

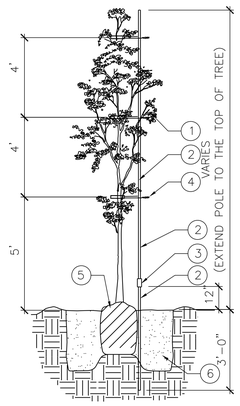

LEGEND:

1. TREE
2. TREE STAKE - 2" DIA. SCH 40 GALVANIZED STEEL PIPE.
3. THREADED GALVANIZED STEEL COUPLING.
4. HOSE AND WIRE TIES, 4' O.C. SPACING, MINIMUM 2 LOCATIONS. DO NOT OVER TIGHTEN, ALLOW TREE TO MOVE SOMEWHAT TO BUILD CALIPER.
5. TREE ROOTBALL.
6. PLANTING PIT REFER TO TREE PLANTING DETAIL.

NOTE:

1. WRAP HOSE AND WIRE TIES AROUND THE TREE TRUNK AND STAKE BY LOOPING IT AROUND. ENSURE HOSE PROTECTS THE TREE BARK. ON OUTSIDE OF STAKE TWIST WIRE AROUND ITSELF TO TIGHTEN.

SECTION

STAKING (VERTICAL TREE) | SCALE: NTS | 6

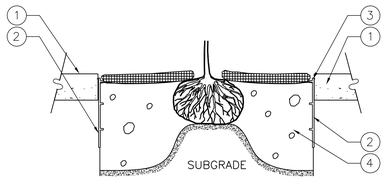

LEGEND:

1. ADJACENT HARDSCAPE
2. ROOT BARRIER PANEL TYPE AT A MINIMUM 24" DEEP, 5' LONG AT ALL PAVING EDGE.
3. TOP OF ROOT BARRIER MUST BE AT LEAST 1/2" ABOVE GRADE.
4. SOIL BACKFILL.

NOTE:

INSTALL ROOT BARRIER AT ALL TREES WITHIN 15' OF HARDSCAPE, i.e. PAVING SIDEWALKS, BUILDING, ETC.

ROOT BARRIER | SCALE: NTS | 4

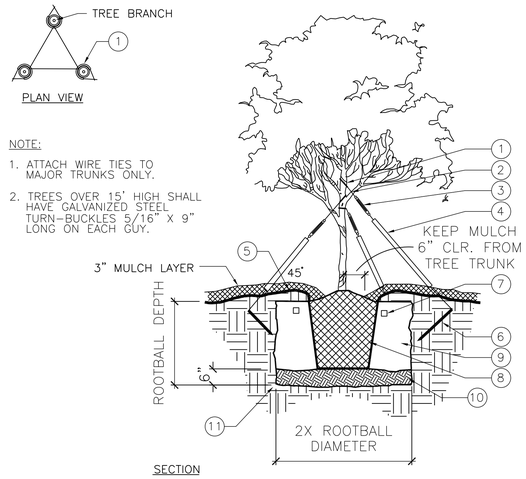

SECTION

NOTE:

1. ATTACH WIRE TIES TO MAJOR TRUNKS ONLY.
2. TREES OVER 15' HIGH SHALL HAVE GALVANIZED STEEL TURN-BUCKLES 5/16" X 9" LONG ON EACH GUY.

LEGEND

1. PROTECTIVE COLLAR, ½" RUBBER HOSE.
2. ½" DIA. GALV. CABLE LENGTH AS REQUIRED.
3. 6" GALV. STEEL TURNBUCKLE
4. ½" DIA. SCH 40 PVC WHITE PIPE(PAINT BLACK), 40" LONG WIRE IN PLACE.
5. 4" HIGH WATER RETENTION BASIN. FORM FROM PLANT PIT EXCAVATION.
6. ¾"x3' GALV. STEEL STAKE WITH CAP.
7. FERTILIZER TABLETS PER PLANTING SPECIFICATIONS.
8. TREE ROOTBALL: 24" BOX OR LARGER 3" ABOVE GRADE, TAPER ROOTBALL TO GRADE
9. PREPARED BACKFILL PER AGRONOMIC SOILS TEST REPORT.
10. 6" ZONE OF OVER EXCAVATED SOIL AND RECOMPACTED.
11. ROOT BARRIER - SEE DETAIL 4 AND NOTES ON THIS SHEET.

TREE PLANTING/GUYING(36"BOX & LARGER) | SCALE: NTS | 2

HGA
1918 Main Street, Third Floor
Santa Monica, California 90405
Telephone 310.557.7600

STRUCTURAL ENGINEER
SAIFUL BOUQUET
155 N LAKE AVE
PASADENA, CA 91101
626-304-2616

MECHANICAL & PLUMBING ENGINEER
STANTEC CONSULTING INC
14130 RIVERSIDE DR. # 201
SHERMAN OAKS, CA 91423
818-377-8220

ELECTRICAL ENGINEER
FBA ENGINEERING
150 PAULARINO AVE. #A120
COSTA MESA, CA 92626
949-852-9995

CIVIL ENGINEER
KPFF CONSULTING ENGINEERS
700 SOUTH FLOWER ST. #2100
LOS ANGELES, CA 90017
213-418-0201

LANDSCAPE ARCHITECT
LYNN CAPOUYA, INC.
17992 MITCHELL SOUTH, #110
IRVINE, CA 92614
949-756-0150

LABORATORY CONSULTANT
RESEARCH FACILITIES DESIGN
3965 FIFTH AVE. #400
SAN DIEGO, CA 92103
619-297-0159

SCIENCE CENTER
SANTA ANA COLLEGE

RANCHO SANTIAGO COMMUNITY COLLEGE DISTRICT

1530 W. 17TH ST.
SANTA ANA, CA 92706

SANTA ANA COLLEGE

I HEREBY CERTIFY THAT THIS PLAN, SPECIFICATION OR REPORT WAS PREPARED BY ME OR UNDER MY DIRECT SUPERVISION AND THAT I AM A DULY LICENSED LANDSCAPE ARCHITECT UNDER THE LAWS OF THE STATE OF CALIFORNIA.

LICENSED ARCHITECT — LYNN G. MAPOUYA III — No. 2314 — SEPTEMBER 30, 2017 RENEWAL DATE — STATE OF CALIFORNIA

CERTIFIED LANDSCAPE ARCHITECT — LYNN CAPOUYA — No. 2314 — RENEWAL 08/31/2017 — STATE OF CALIFORNIA

NAME: LYNN CAPOUYA
DATE: AUGUST 24, 2017
REGISTRATION NUMBER: 2314

NO	DESCRIPTION	DATE
2	Addendum 2	9/1/17

ISSUANCE HISTORY - THIS SHEET

DRAWN BY: JZ | REVIEW BY: KY

HGA NO: 3584-001-00

PLANTING DETAILS

DATE: JULY 06, 2017

L3.02

ADDENDA PACKAGE

©COPYRIGHT HAMMEL, GREEN AND ABRAHAMSON, INC.

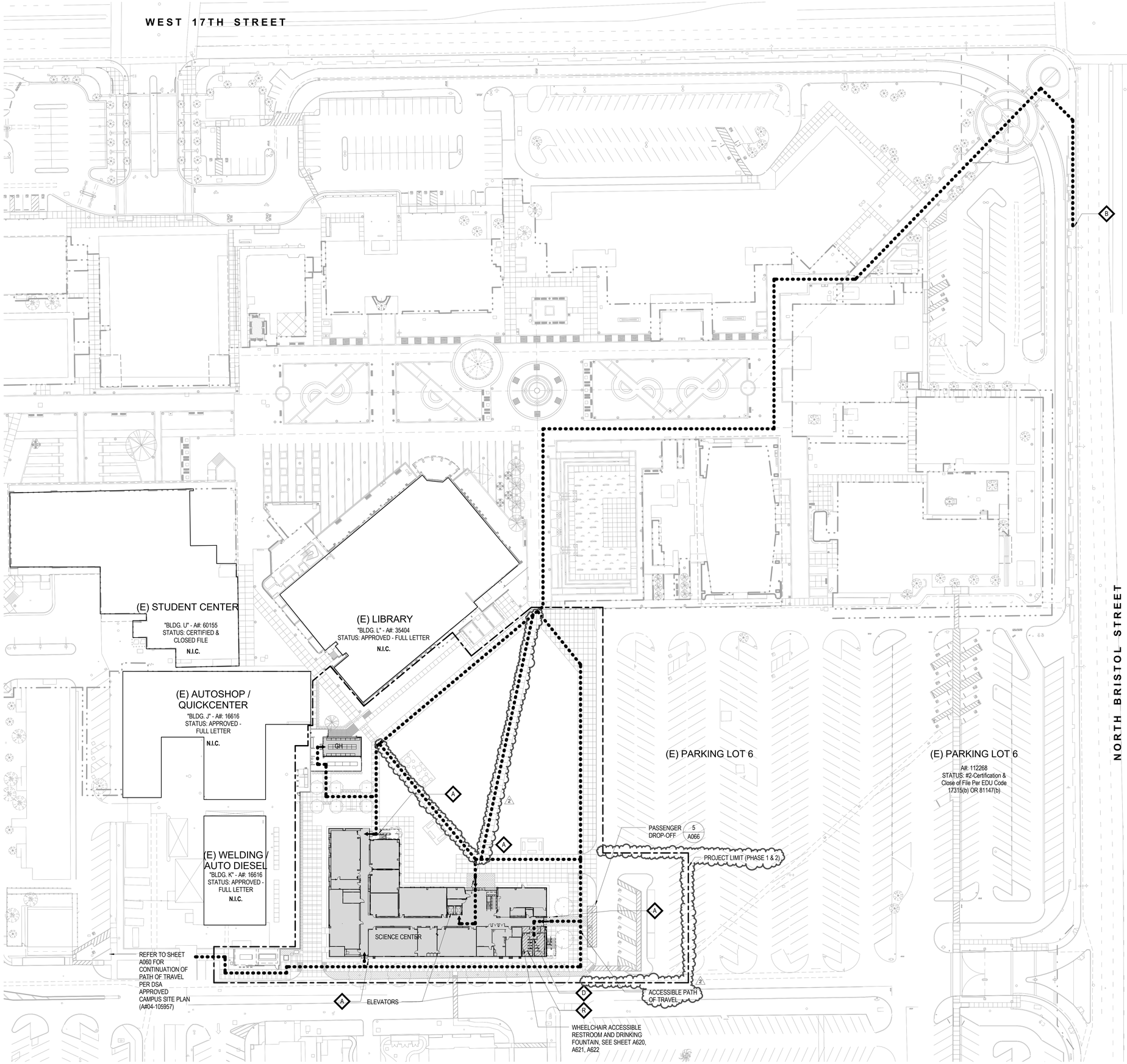

1 SITE ACCESSIBILITY PLAN
1" = 40'-0"

GENERAL NOTES

THESE REFERENCE CONCEPTUAL SITE ACCESSIBILITY PLANS INDICATE EXISTING NONCOMPLIANT FEATURES AND FUTURE PROPOSED IMPROVEMENTS AS MUTUALLY AGREED BY THE DIVISION OF THE STATE ARCHITECT AND THE COMMUNITY COLLEGE DISTRICT. ADDITIONAL ACCESSIBILITY REQUIREMENTS MAY ARISE DURING FUTURE PROJECT REVIEWS. IT IS THE RESPONSIBILITY OF THE COMMUNITY COLLEGE DISTRICT TO UPDATE AND SUBMIT THESE PLANS TO THE DIVISION OF THE STATE ARCHITECT FOR REVIEW IN A TIMELY MANNER. THE ARCHITECT OF RECORD FOR FUTURE PROJECTS SHALL ASSURE CONFORMANCE WITH THESE PLANS AND PROVIDE AN INTERFACE BETWEEN THEM AND PROPOSED PROJECTS.

1. ACCESSIBLE PATH OF TRAVEL (P.O.T.) AS INDICATED ON PLAN IS A BARRIER FREE ACCESS AT LEAST 48 INCHES WIDE WITHOUT ANY ABRUPT VERTICAL CHANGES EXCEEDING 1/2" AT 1:2 MAXIMUM SLOPE, EXCEPT THAT LEVEL CHANGES DO NOT EXCEED 1/4" VERTICAL. MAXIMUM CROSS SLOPE 2% TYPICAL AND MAXIMUM SLOPE IN THE DIRECTION OF TRAVEL IS 5% UNLESS OTHERWISE NOTED. SURFACE TO BE SLIP RESISTANT , STABLE, FIRM, AND SMOOTH.
2. FOR EACH PROJECT TO BE SUBMITTED TO D.S.A., ARCHITECT AND CONTRACTOR TO VERIFY THAT ALL BARRIERS IN THE PATH OF TRAVEL HAVE BEEN REMOVED OR WILL BE REMOVED UNDER THAT PROJECT AND P.O.T. COMPLIES WITH CBC 1133B.
3. SIGNAGE ALONG P.O.T. TO INCLUDE DIRECTIONAL SITE SIGNAGE IDENTIFYING LOCATIONS OF ACCESSIBLE PARKING AND P.O.T. TO PRIMARY DESTINATION HUBS ON CAMPUS, AND WHERE P.O.T. DEVIATES FROM REGULAR PEDESTRIAN PATH. EXTERIOR SIGNAGE AT BUILDINGS TO INDICATE ACCESSIBLE FEATURES WITHIN BUILDINGS. INTERIOR SIGNS TO BE COMPLIANT AT (N) BUILDINGS AND ALONG P.O.T. AT AREAS OF ALTERATION IN (E) BUILDINGS. PRIVDE TACTILE SIGNAGE AT EACH EXIT AND AT EACH LANDING AT ENCLOSED STAIRWAYS.
4. CURB CUTS OR FLUSH-TO-GRADE RAMPS TO BE PROVIDED AS REQUIRED TO MAINTAIN ACCESSIBLE P.O.T.
5. FOR EACH PROJECT SUBMITTED TO D.S.A., ARCHITECT TO INDICATE ANY DISRUPTIONS TO EXISTING ACCESSIBLE P.O.T. RESULTING FROM THE CONSTRUCTION WORK ASSOCIATED WITH THE PROJECT THROUGHOUT THE DURATION OF CONSTRUCTION. P.O.T. TO ANY RELOCATABLE TEMPORARY BUILDINGS REQUIRED TO CONTINUE CLASS OPERATIONS MUST ALSO BE INDICATED.
6. SEE D.S.A. WEBSITE FOR ACCESS COMPLIANCE DESIGN CHECKLIST: http://www.dsa.dgs.ca.gov/Access/ud_accessmanual.htm
7. PROVIDE TEXT TELEPHONE (TTY) AS REQUIRED AT STADIUM AND WHERE REQUIRED PER D.S.A. ACCESS COMPLIANCE DESIGN CHECKLIST.
8. DESIGN PROFESSIONAL IN GENERAL RESPONSIBLE CHARGE STATEMENT: THE POT IDENTIFIED IN THESE CONSTRUCTION DOCUMENTS IS COMPLIANT WITH THE CURRENT APPLICABLE CALIFORNIA BUILDING CODE ACESSIBILITY PROVISIONS FOR PATH OF TRAVEL REQUIREMENTS FOR ALTERATIONS, ADDITIONS, AND STRUCTURAL REPAIRS. AS PART OF THE DESIGN OF THIS PROJECT, THE POT WAS EXAMINED AND ANY ELEMENTS, COMPONENTS OR PORTIONS OF THE POT THAT WERE DETERMINED TO BE NONCOMPLIANT 1) HAVE BEEN IDENTIFIED AND 2) CORRECTIVE WORK NECESSARY TO BRING THEM INTO COMPLIANCE HAS BEEN INCLUDED WITHIN THE SCOPE OF THIS PROJECT'S WORK THROUGH DETAILS, DRAWINGS, AND SPECIFICATIONS INCORPORATED INTO THESE CONSTRUCTION DOCUMENTS. ANY NONCOMPLIANT ELEMENTS, COMPONETS OR PORTIONS OF THE POT THAT WILL NOT BE CORRECTED BY THIS PROJECT BASED ON VALUATION THRESHOLD LIMITATIONS OR A FINDING OF UNREASONABLE HARDSHIP ARE SO INDICATED IN THESE CONSTRUCTION DOCUMENTS. DURING CONSTRUCTION, IF POT ITEMS WITHIN THE SOCPE OF THE PROJECT REPRESENTED AS CODE COMPLIANT ARE FOUND TO BE NONCONFORMING BEYOND REASONABLE CONSTRUCTION TOLERANCES, THEY SHALL BE BROUGHT INTO COMPLIANCE WITH THE CBC AS A PART OF THIS PROJECT BY MEANS OF A CONSTRUCTION CHANGE DOCUMENT.

NOTES

A. PATH OF TRAVEL (P.O.T.) AS INDICATED IS A BARRIER FREE ACCESS WITHOUT ANY ABRUPT VERTICAL CHANGES EXCEEDING 1/2" AT 1:2 MAXIMUM SLOPE, EXCEPT THAT LEVEL CHANGES DO NOT EXCEED 1/4" MAXIMUM CROSS-SLOPE 2% TYPICAL. THE CONTRACTOR SHALL VERIFY THAT THE INDICATED PATH OF TRAVEL HAS BEEN CONSTRUCTED WITHOUT BARRIERS.
B. SLOPED WALKWAY PATH OF TRAVEL SLOPES DO NOT EXCEED 1:20.
C. RAMP P.O.T. SLOPES DO NOT EXCEED 1:12.
D. RAMP P.O.T. SLOPES DO NOT EXCEED 1:12.
E. EXISTING GRATINGS TO REMAIN. OPENINGS IN GRATINGS ALONG P.O.T. DO NOT EXCEED 1/2" IN BOTH DIRECTIONS.
F. THERE ARE NO GATES ALONG P.O.T. ON THE PROJECT; THERE IS A GATE AT THE GREENHOUSE.
G. SEE SIGNAGE SHEETS FOR TOW-AWAY AND DIRECTIONAL PATH OF TRAVEL SIGN LOCATIONS.
H. SEE CIVIL DRAWINGS FOR SITE INFOMRATION BEYOND THE BORDERS OF THIS DRAWING.
I. FOR BALANCE OF INFORMATION, REFER TO CIVIL, LANDSCAPE, ELEC AND SIGNAGE DRAWINGS.

SITE PLAN LEGEND

- POINT OF ACCESS
- B — EXISTING PUBLIC BUS STOP
- D — ACCESSIBLE DRINKING FOUNTAIN ON PATH OF TRAVEL
- R — ACCESSIBLE RESTROOMS ON PATH OF TRAVEL
- A — AUTOMATIC DOOR OPERATOR, REF TO DETAIL 6 / A066
- LIMIT OF WORK
- ACCESSIBLE PATH OF TRAVEL

ACCESSIBLE PATH OF TRAVEL (POT) AS INDICATED ON PLAN IS A BARRIER FREE ACCESS ROUTE WITHOUT ANY ABRUPT VERTICAL LEVEL CHANGES EXCEEDING 1/2" BEVELED AT 1:2 MAX. SLOPE, OR VERTICAL LEVEL CHANGES NOT EXCEEDING 1/4" MAX. AND IS AT LEAST 48" IN WIDTH. SURFACE IS SLIP RESISTANT, STABLE, FIRM, AND SMOOTH. CROSS SLOPE DOES NOT EXCEED 2% AND SLOPE IN THE DIRECTION OF TRAVEL IS LESS THAN 5% UNLESS OTHERWISE INDICATED. P.O.T. SHALL BE MAINTAINED FREE OF OVERHANG OBSTRUCTIONS TO 80" MINIMUM (CBC 1133B.8.2) AND PROTRUDING OBJECTS GREATER THAN 4" PROJECTION FROM WALL BETWEEN 27" AND 80" ABOVE THE FLOOR (1133B.8.6). CONTRACTOR TO VERIFY THAT ALL BARRIERS IN THE PATH OF TRAVEL HAVE BEEN REMOVED OR WILL BE REMOVED UNDER THIS PROJECT AND THE PATH OF TRAVEL COMPLIES WITH CBC1133B.

SEE "C" SERIES DRAWINGS FOR SITE INFORMATION BEYOND THE BORDERS OF THIS DRAWING.

HGA
1918 Main Street, Third Floor
Santa Monica , California 90405
Telephone 310.557.7600

STRUCTURAL ENGINEER
SAIFUL BOUQUET
155 N LAKE AVE
PASADENA, CA 91101
626-304-2616

MECHANICAL & PLUMBING ENGINEER
STANTEC CONSULTING INC
14130 RIVERSIDE DR. # 201
SHERMAN OAKS, CA 91423
818-377-8220

ELECTRICAL ENGINEER
FBA ENGINEERING
150 PAULARINO AVE. #A120
COSTA MESA, CA 92626
949-852-9995

CIVIL ENGINEER
KPFF CONSULTING ENGINEERS
700 SOUTH FLOWER ST. #2100
LOS ANGELES, CA 90017
213-418-0201

LANDSCAPE ARCHITECT
LYNN CAPOUYA, INC.
17992 MITCHELL SOUTH, #110
IRVINE, CA 92614
949-756-0150

LABORATORY CONSULTANT
RESEARCH FACILITIES DESIGN
3965 FIFTH AVE. #400
SAN DIEGO, CA 92103
619-297-0159

SCIENCE CENTER
SANTA ANA COLLEGE

RANCHO SANTIAGO COMMUNITY COLLEGE DISTRICT

1530 W. 17TH ST.
SANTA ANA, CA 92706

SANTA ANA COLLEGE

I HEREBY CERTIFY THAT THIS PLAN, SPECIFICATION OR REPORT WAS PREPARED BY ME OR UNDER MY DIRECT SUPERVISION AND THAT I AM A DULY LICENSED ARCHITECT UNDER THE LAWS OF THE STATE OF CA.

JAMES G. MATSON — LICENSED ARCHITECT — No. C13036 — REGISTERED IN STATE OF CALIFORNIA

NAME: JAMES G. MATSON
DATE: MAY 16, 2017
REGISTRATION NUMBER: C13036

NO	DESCRIPTION	DATE
2	Addendum 2	9/1/17

ISSUANCE HISTORY - THIS SHEET

DRAWN BY: SK | REVIEW BY: TE

HGA NO: 3584-001-00

SITE ACCESSIBILITY PLAN

DATE: JULY 06, 2017

A013

ADDENDA PACKAGE

© COPYRIGHT HAMMEL, GREEN AND ABRAHAMSON, INC.

C:\Users\tlasky\Documents\Revit Local Files\16-3584-001-00_SAC-SC_tlasky.rvt
9/1/2017 2:58:01 PM
SK

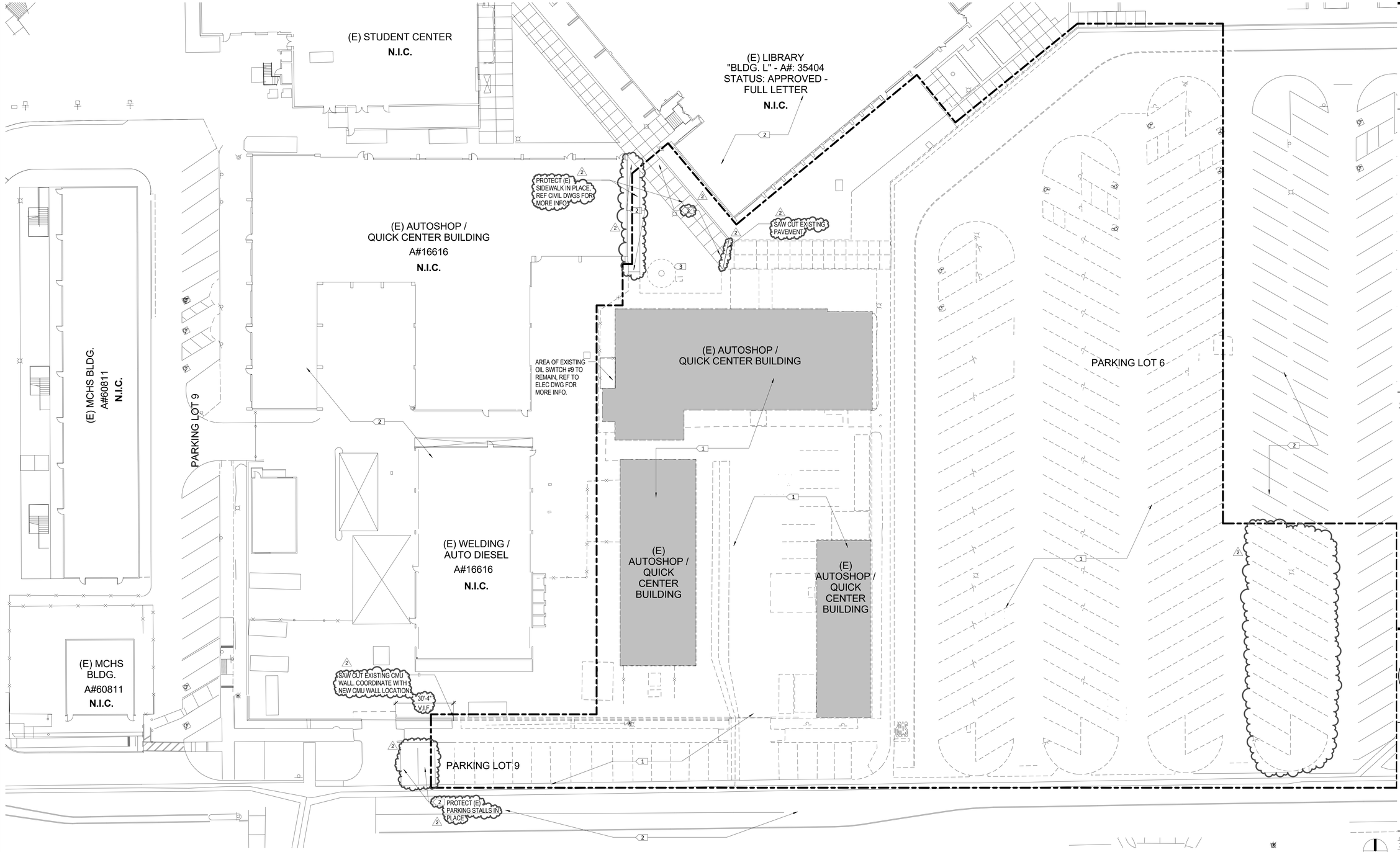

1 DEMO SITE PLAN
1" = 20'-0"

GENERAL NOTES - DEMOLITION PLAN

A. PROVIDE SAFE MEANS OF EGRESS THROUGH AND AROUND THE BUILDING AND SITE AT ALL TIMES.
B. PROVIDE FIRE EXTINGUISHERS PER AUTHORITY HAVING JURISDICTION'S REQUIREMENTS AT ALL TIMES THROUGHOUT CONSTRUCTION AREA.
C. ALL SHUTDOWNS OF MECHANICAL, SPRINKLER, FIRE ALARM AND ELECTRICAL SYSTEMS SHALL BE COORDINATED WITH OWNER. COMPLY WITH AUTHORITY HAVING JURISDICTION'S REQUIREMENTS FOR NOTIFICATION, FIRE WATCH, RE-TESTING, ETC.
D. AVOID DISRUPTION TO ADJACENT OCCUPIED BUILDINGS AS MUCH AS POSSIBLE. KEEP NOISE TO A LEVEL ACCEPTABLE TO THE OWNER BY SCHEDULING EXCESSIVE NOISE TASKS WITH OWNER. ALL SAW-CUTTING, JACK-HAMMERING AND NOISE-VIBRATION-PRODUCING ACTIVITIES TO BE SCHEDULED WITH AND EXPRESSLY APPROVED BY THE OWNER ON A DAY-BY-DAY BASIS SO AS TO NOT INTERFERE WITH CAMPUS ACTIVITIES.
E. VERIFY EXISTING CONDITIONS AND DIMENSIONS. THE INFORMATION PROVIDED ON THIS SHEET MAY NOT BE ENTIRELY ACCURATE OR COMPREHENSIVE, BUT RATHER TO CONVEY THE ROUGH ORDER OF MAGNITUDE INTENT AND SCOPE OF DEMOLITION WORK. COORDINATE THE EXTENT OF DEMOLITION WORK AND EXISTING WORK TO REMAIN (AS INDICATED) WITH THE OWNER. NOTIFY ARCHITECT OF ALL CONFLICTS IMMEDIATELY.
F. ALL SHUTDOWNS OF MECHANICAL, SPRINKLER, FIRE ALARM AND/OR ELECTRICAL SYSTEMS SHALL BE COORDINATED WITH OWNER AND DSA PROJECT INSPECTOR, AND MAY OCCUR DURING NON-OPERATIONAL HOURS.
G. COORDINATE WITH OWNER TO IDENTIFY EXISTING ITEMS THAT ARE TO BE SALVAGED OR RELOCATED.
H. VERIFY WITH OWNER TO IDENTIFY AND/OR COORDINATE HAZARDOUS MATERIAL REMEDIATION EFFORTS REQUIRED FOR EXISTING ELEMENTS TO BE REMOVED.
I. VERIFY EXISTING CONDITIONS AND DIMENSIONS. COORDINATE THE EXTENT OF DEMOLITION WORK AND EXISTING CONSTRUCTION TO REMAIN WITH NEW WORK. NOTIFY ARCHITECT OF CONFLICTS.
J. DASHED LINES INDICATE EXISTING CONSTRUCTION TO BE REMOVED, UNLESS NOTED OTHERWISE.
K. REFER TO STRUCTURAL, MECHANICAL, PLUMBING AND ELECTRICAL DRAWINGS FOR DISCIPLINE SPECIFIC DEMOLITION ITEMS NOT SHOWN OR NOTED.
L. WHERE EXISTING CONSTRUCTION IS REMOVED, CUT, DRILLED, DAMAGED OR OTHERWISE DISTURBED, PATCH DEFECTIVE AND INCOMPLETE SURFACES AS REQUIRED TO MATCH ADJACENT, EXISTING UNDAMAGED SURFACES, UNLESS NOTED OTHERWISE.
M. WHERE EXISTING PIPING IS PARTIALLY REMOVED, CAP AND TAG END OF REMAINING PORTION.
N. AT EDGE OF DEMOLITION SCOPE, PROTECT EXISTING FINISHES AND SITE ELEMENTS TO REMAIN FROM DEMOLITION ACTIVITIES.
O. PROVIDE AND MAINTAIN PHYSICAL BARRIER AROUND AREA OF DEMOLITION AT ALL TIMES.
P. PROVIDE TEMPORARY SIGNAGE AS NECESSARY TO ACCOMMODATE TEMPORARY PEDESTRIAN AND VEHICULAR ROUTES DISPLACED BY DEMOLITION ACTIVITIES, AS NECESSARY TO MEET ACCESSIBILITY AND EGRESS ROUTE REQUIREMENTS OF ALL APPLICABLE CODES, AS WELL AS SPECIFIC OWNER REQUIREMENTS.
Q. TEMPORARY PEDESTRIAN ROUTES SHALL BE CONSTRUCTED OR AUGMENTED AS NECESSARY TO MEET REQUIREMENTS OF THE "ACCESSIBLE ROUTE" FOR MAXIMUM SLOPE, CLEAR WIDTH, FINISH MATERIAL, OPENINGS, AND LANDINGS, AS DEFINED HEREIN.
R. MONITOR AND TRACK ALL CONSTRUCTION DEMOLITION WASTE MATERIALS REQUIRED FOR LEED SILVER EQUIVALENCY AS DEFINED HEREIN.

KEYNOTES - DEMOLITION PLAN

#	DESCRIPTION
1	DEMOLISH EXISTING - SEE CIVIL DRAWINGS FOR MORE INFORMATION
2	PROTECT IN PLACE - SEE CIVIL DRAWINGS FOR MORE INFORMATION
3	EXISTING TREE TO REMAIN- REF TO LANDSCAPE DWGS FOR MORE INFO.

DEMO PLAN LEGEND

- LIMIT OF WORK
- (E) ELEMENT TO BE DEMOLISHED
- (E) BUILDING TO BE DEMOLISHED

hga.
1918 Main Street, Third Floor
Santa Monica, California 90405
Telephone 310.557.7600

STRUCTURAL ENGINEER
SAIFUL BOUQUET
155 N LAKE AVE
PASADENA, CA 91101
626-304-2616

MECHANICAL & PLUMBING ENGINEER
STANTEC CONSULTING INC
14130 RIVERSIDE DR. # 201
SHERMAN OAKS, CA 91423
818-377-8220

ELECTRICAL ENGINEER
FBA ENGINEERING
150 PAULARINO AVE. #A120
COSTA MESA, CA 92626
949-852-9995

CIVIL ENGINEER
KPFF CONSULTING ENGINEERS
700 SOUTH FLOWER ST. #2100
LOS ANGELES, CA 90017
213-418-0201

LANDSCAPE ARCHITECT
LYNN CAPOUYA, INC.
17992 MITCHELL SOUTH, #110
IRVINE, CA 92614
949-756-0150

LABORATORY CONSULTANT
RESEARCH FACILITIES DESIGN
3965 FIFTH AVE. #400
SAN DIEGO, CA 92103
619-297-0159

SCIENCE CENTER
SANTA ANA COLLEGE
RANCHO SANTIAGO COMMUNITY COLLEGE DISTRICT
1530 W. 17TH ST.
SANTA ANA, CA 92706

SANTA ANA COLLEGE

I HEREBY CERTIFY THAT THIS PLAN, SPECIFICATION OR REPORT WAS PREPARED BY ME OR UNDER MY DIRECT SUPERVISION AND THAT I AM A DULY LICENSED ARCHITECT UNDER THE LAWS OF THE STATE OF CA.

LICENSED ARCHITECT JAMES G. MATSON No. C13036 REGISTERED IN CIVIL STATE OF CALIFORNIA

NAME: JAMES G. MATSON
DATE: MAY 16, 2017
REGISTRATION NUMBER: C13036

NO	DESCRIPTION	DATE
2	Addendum 2	9/1/17

ISSUANCE HISTORY - THIS SHEET

DRAWN BY: SK REVIEW BY: TE

HGA NO: 3584-001-00

SITE DEMOLITION PLAN

DATE: JULY 06, 2017

A014

ADDENDA PACKAGE

© COPYRIGHT HAMMEL, GREEN AND ABRAHAMSON, INC.

SK 9/1/2017 2:58:09 PM C:\Users\tlasley\Documents\Revit Local Files\A16-3584-001-05_SAC-SC_tlasley.rvt

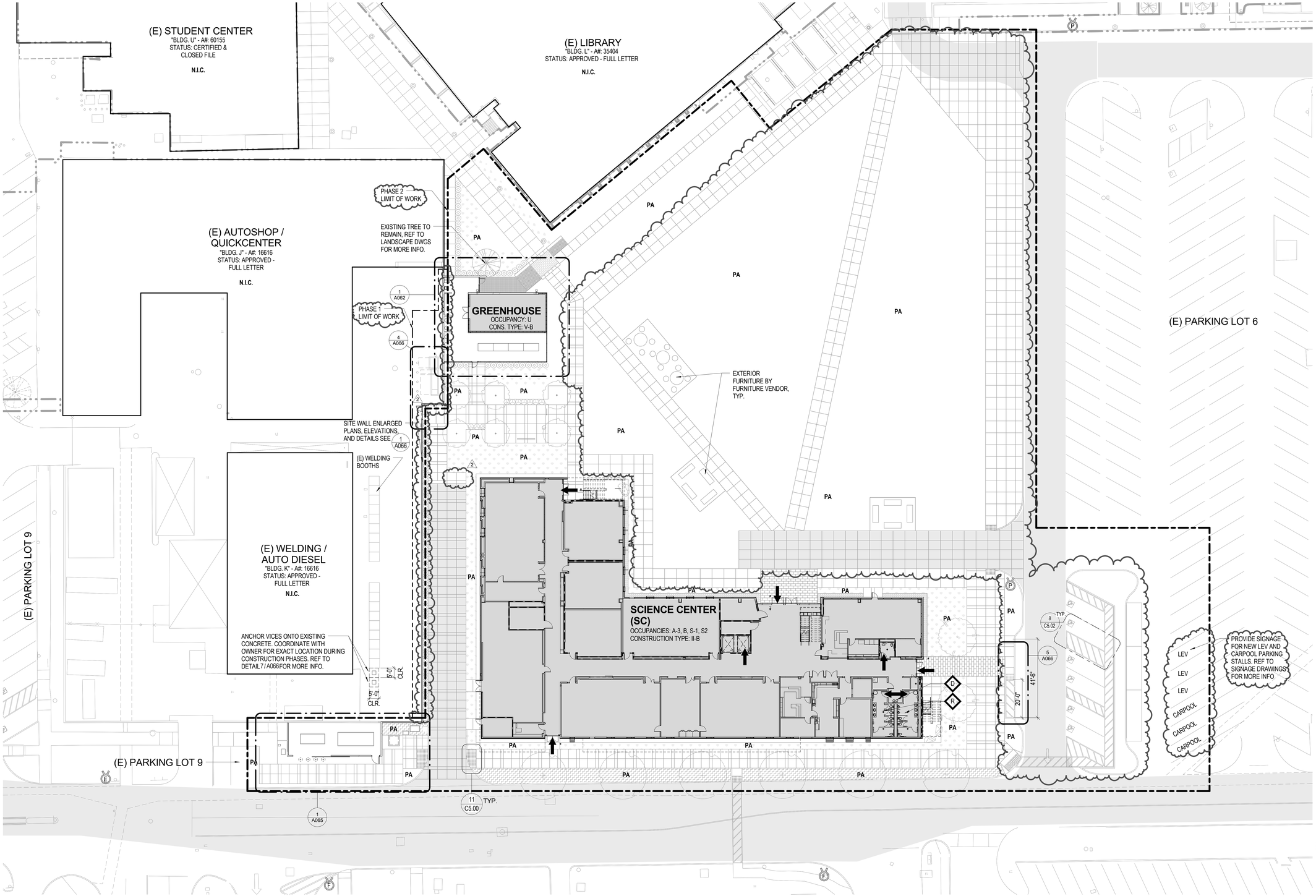

1 SITE PLAN ENLARGED
1" = 20'-0"

SITE LEGEND

	FIRE ACCESS	D	DRINKING FOUNTAIN ALONG P.O.T.
PA	PLANTER AREA	R	RESTROOMS ALONG P.O.T.
	LIMIT OF WORK	F	EXISTING FIRE HYDRANT
	DETECTABLE WARNING MIN. 3'-0" IN DIRECTION OF TRAVEL WHERE OCCURS (TYP.)	P	PROPOSED FIRE HYDRANT
		LEV	PARKING STALL FOR LOW EMITTING VEHICLE
	POINT OF ACCESS	CARPOOL	PARKING STALL FOR CARPOOL VEHICLE

PARKING LOT ANALYSIS - # OF SPACES PER LOT

		COMPACT	REGULAR	ACCESSIBLE	VAN ACCESSIBLE	TOTAL	DELTA
LOT #6	EXISTING	0	674	15	11	700	
	NEW	3	463	15	11	489	-208
LOT #9	EXISTING	0	35	5	1	41	
	NEW	0	16	5	1	22	-19

NOTE: CONSTRUCTION PHASING PER OWNER REQUIREMENTS.

HGA
1918 Main Street, Third Floor
Santa Monica, California 90405
Telephone 310.557.7600

STRUCTURAL ENGINEER
SAIFUL BOUQUET
155 N LAKE AVE
PASADENA, CA 91101
626-304-2616

MECHANICAL & PLUMBING ENGINEER
STANTEC CONSULTING INC
14130 RIVERSIDE DR. # 201
SHERMAN OAKS, CA 91423
818-377-8220

ELECTRICAL ENGINEER
FBA ENGINEERING
150 PAULARINO AVE. #A120
COSTA MESA, CA 92626
949-852-9995

CIVIL ENGINEER
KPFF CONSULTING ENGINEERS
700 SOUTH FLOWER ST. #2100
LOS ANGELES, CA 90017
213-418-0201

LANDSCAPE ARCHITECT
LYNN CAPOUYA, INC.
17992 MITCHELL SOUTH, #110
IRVINE, CA 92614
949-756-0150

LABORATORY CONSULTANT
RESEARCH FACILITIES DESIGN
3965 FIFTH AVE. #400
SAN DIEGO, CA 92103
619-297-0159

SCIENCE CENTER
SANTA ANA COLLEGE
RANCHO SANTIAGO COMMUNITY COLLEGE DISTRICT
1530 W. 17TH ST.
SANTA ANA, CA 92706

SANTA ANA COLLEGE

I HEREBY CERTIFY THAT THIS PLAN, SPECIFICATION OR REPORT WAS PREPARED BY ME OR UNDER MY DIRECT SUPERVISION AND THAT I AM A DULY LICENSED ARCHITECT UNDER THE LAWS OF THE STATE OF CA.

LICENSED ARCHITECT JAMES G. MATSON REGISTERED PROFESSIONAL ENGINEER NO. 21036 STATE OF CALIFORNIA

NAME: JAMES G. MATSON
DATE: MAY 16, 2017
REGISTRATION NUMBER: C13036

NO	DESCRIPTION	DATE
2	Addendum 2	9/1/17

ISSUANCE HISTORY - THIS SHEET
DRAWN BY: SK REVIEW BY: TE

HGA NO: 3584-001-00

ENLARGED ARCHITECTURAL SITE PLAN

DATE: JULY 06, 2017

A061

ADDENDA PACKAGE

© COPYRIGHT HAMMEL, GREEN AND ABRAHAMSON, INC.

SK 9/1/2017 2:58:13 PM C:\Users\lsstacyk\Documents\Revit Local Files\A16-3584-001-00_SAC SC_lsstacyk.rvt

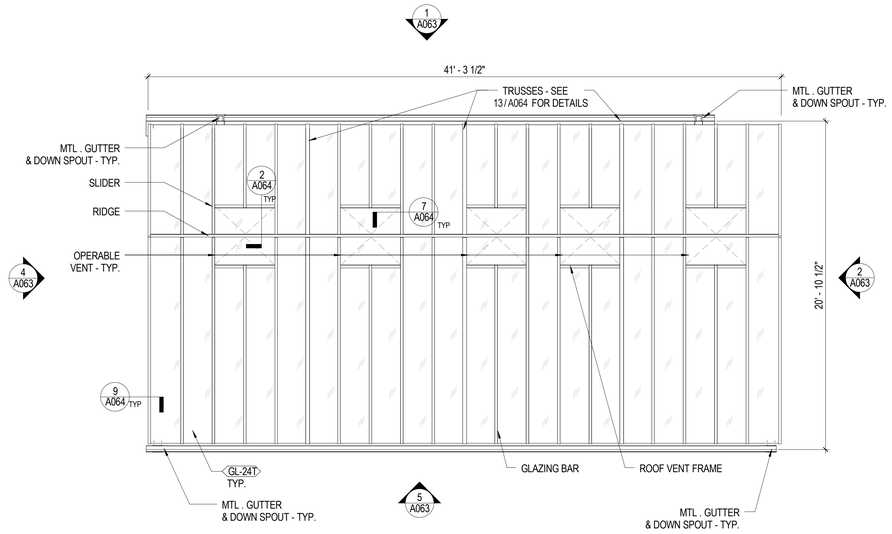

6 GREENHOUSE - ROOF PLAN
1/4" = 1'-0"

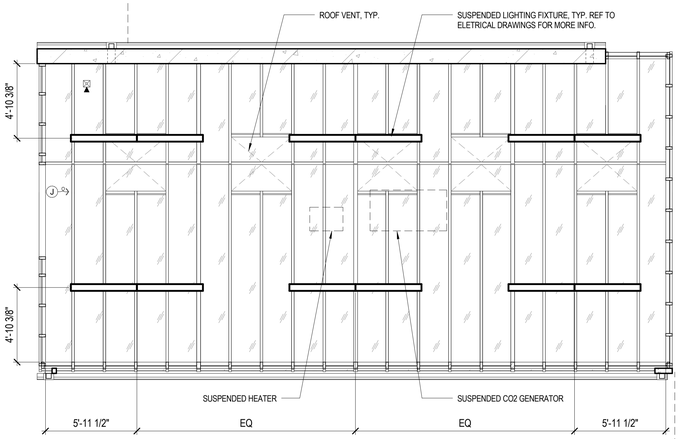

NOTE: ANCHORAGE DETAIL FOR SUSPENDED LIGHTING FIXTURE, SUSPENDED HEATER AND SUSPENDED CO2 GENERATOR IS REQUIRED AS PART OF DEFERRED SUBMITTAL.

2 GREENHOUSE - ENLARGED REFLECTED CEILING PLAN
1/4" = 1'-0"

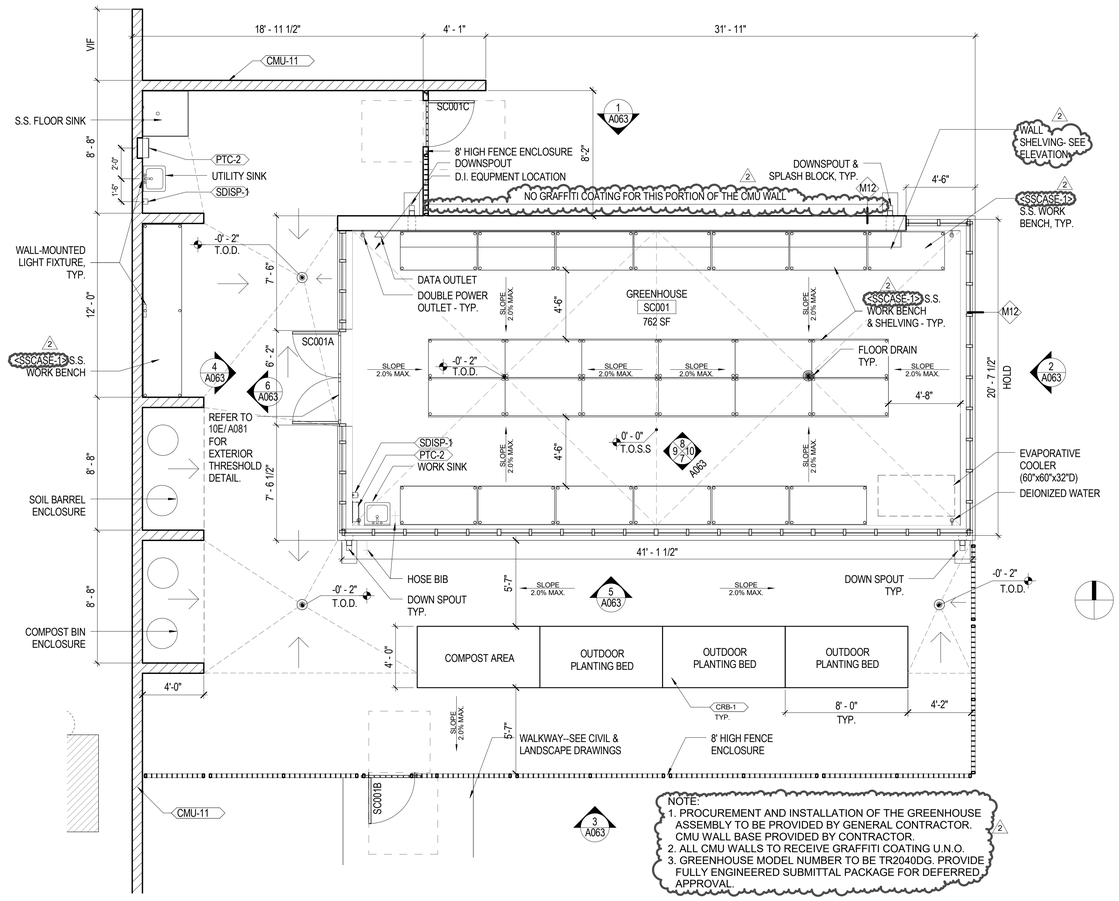

1 GREENHOUSE - ENLARGED PLAN
1/4" = 1'-0"

hga.
1918 Main Street, Third Floor
Santa Monica , California 90405
Telephone 310.557.7600

STRUCTURAL ENGINEER
SAIFUL BOUQUET
155 N LAKE AVE
PASADENA, CA 91101
626-304-2616

MECHANICAL & PLUMBING ENGINEER
STANTEC CONSULTING INC
14130 RIVERSIDE DR. # 201
SHERMAN OAKS, CA 91423
818-377-8220

ELECTRICAL ENGINEER
FBA ENGINEERING
150 PAULARINO AVE. #A120
COSTA MESA, CA 92626
949-852-9995

CIVIL ENGINEER
KPFF CONSULTING ENGINEERS
700 SOUTH FLOWER ST. #2100
LOS ANGELES, CA 90017
213-418-0201

LANDSCAPE ARCHITECT
LYNN CAPOUYA, INC.
17992 MITCHELL SOUTH, #110
IRVINE, CA 92614
949-756-0150

LABORATORY CONSULTANT
RESEARCH FACILITIES DESIGN
3965 FIFTH AVE. #400
SAN DIEGO, CA 92103
619-297-0159

SCIENCE CENTER
SANTA ANA COLLEGE

RANCHO SANTIAGO
COMMUNITY COLLEGE
DISTRICT

1530 W. 17TH ST.
SANTA ANA, CA 92706

SANTA ANA
COLLEGE

I HEREBY CERTIFY THAT THIS PLAN, SPECIFICATION OR REPORT WAS PREPARED BY ME OR UNDER MY DIRECT SUPERVISION AND THAT I AM A DULY LICENSED ARCHITECT UNDER THE LAWS OF THE STATE OF CA.

LICENSED ARCHITECT
JAMES G. MATSON
No. C13036
REGISTERED IN STATE OF CALIFORNIA

NAME: JAMES G. MATSON
DATE: MAY 16, 2017
REGISTRATION NUMBER: C13036

NO	DESCRIPTION	DATE
2	Addendum 2	9/1/17

ISSUANCE HISTORY - THIS SHEET
DRAWN BY: MS | REVIEW BY: Approver

HGA NO: 3584-001-00

GREEN HOUSE - ENLARGED PLANS

DATE: JULY 06, 2017

A062

ADDENDA PACKAGE

© COPYRIGHT HAMMEL, GREEN AND ABRAHAMSON, INC.

MS 9/1/2017 2:58:14 PM C:\Users\tlasley\Documents\Revit Local Files\A16-0584-001-05_SAC-SC_tlasley.rvt

COORDINATE WITH OWNER TO RELOCATE (E) VICES DURING CONSTRUCTION PHASES.

(E) 6" CONCRETE SLAB ON GRADE. V.I.F.

(4) 1/2" HILTI KB-TZ EXP ANCHOR (ICC ESR-1917) W/ 3-1/4" EFF EMBEDMENT.

7 ANCHORING DETAIL AT VICES
NTS

6 AUTOMATIC DOOR OPERATOR DETAIL
1 1/2" = 1'-0"

5 ACCESSIBLE DROP OFF
1/4" = 1'-0"

4 NEW TRANSFORMER AND EXISTING OIL SWITCH - ENLARGED PLAN
1/4" = 1'-0"

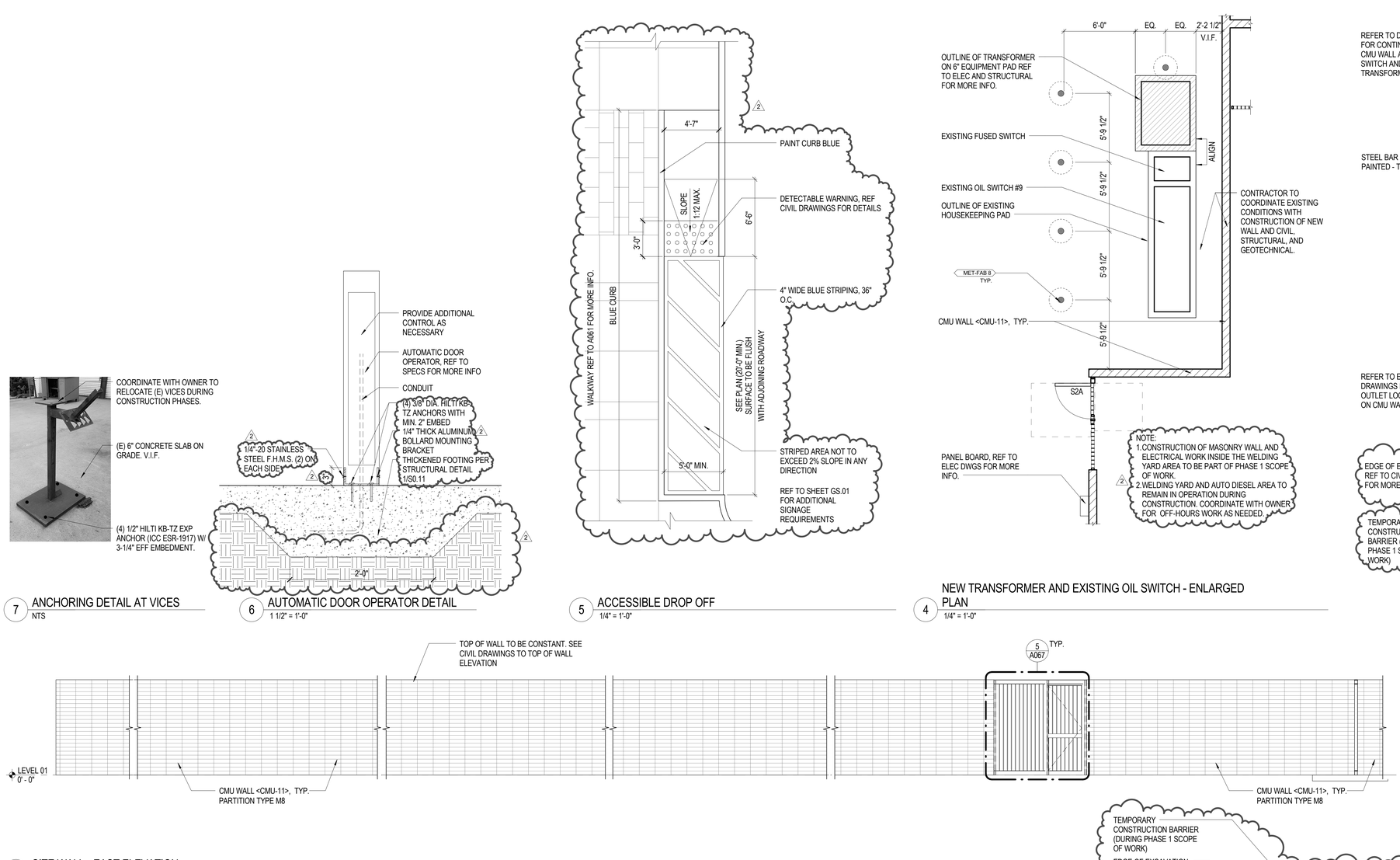

3 SITE WALL - EAST ELEVATION
1/4" = 1'-0"

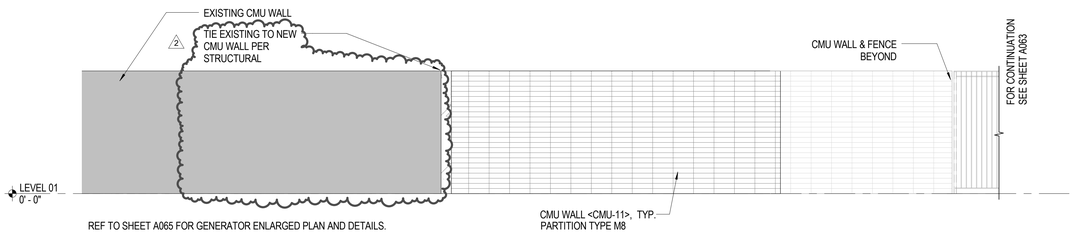

2 SITE WALL - SOUTH ELEVATION
1/4" = 1'-0"

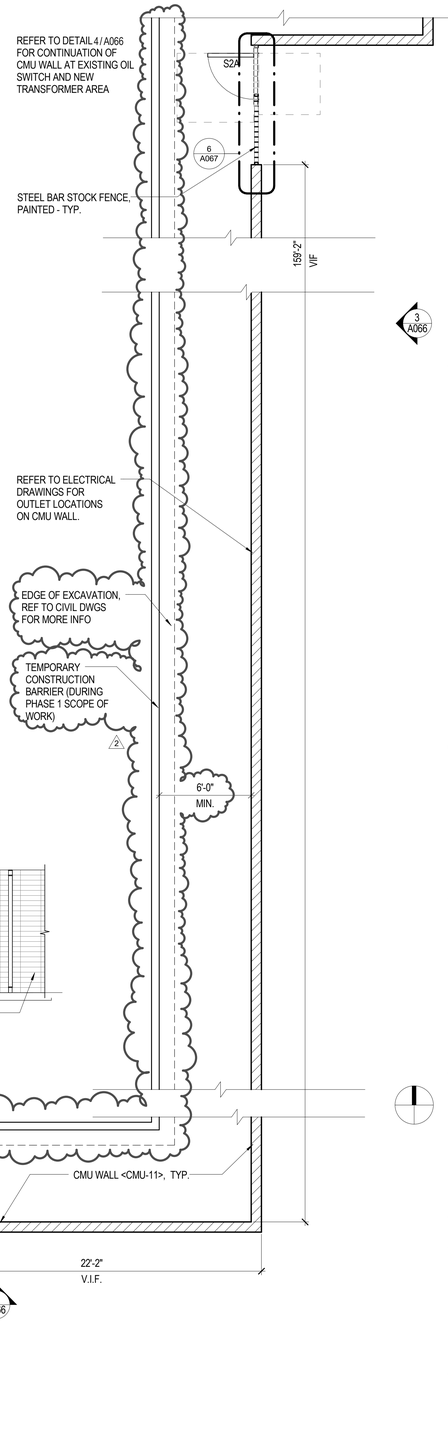

1 SITE WALL - ENLARGED PLAN
1/4" = 1'-0"

hga.
1918 Main Street, Third Floor
Santa Monica , California 90405
Telephone 310.557.7600

STRUCTURAL ENGINEER
SAIFUL BOUQUET
155 N LAKE AVE
PASADENA, CA 91101
626-304-2616

MECHANICAL & PLUMBING ENGINEER
STANTEC CONSULTING INC
14130 RIVERSIDE DR. # 201
SHERMAN OAKS, CA 91423
818-377-8220

ELECTRICAL ENGINEER
FBA ENGINEERING
150 PAULARINO AVE. #A120
COSTA MESA, CA 92626
949-852-9995

CIVIL ENGINEER
KPFF CONSULTING ENGINEERS
700 SOUTH FLOWER ST. #2100
LOS ANGELES, CA 90017
213-418-0201

LANDSCAPE ARCHITECT
LYNN CAPOUYA, INC.
17992 MITCHELL SOUTH, #110
IRVINE, CA 92614
949-756-0150

LABORATORY CONSULTANT
RESEARCH FACILITIES DESIGN
3965 FIFTH AVE. #400
SAN DIEGO, CA 92103
619-297-0159

SCIENCE CENTER
SANTA ANA COLLEGE

RANCHO SANTIAGO COMMUNITY COLLEGE DISTRICT

1530 W. 17TH ST.
SANTA ANA, CA 92706

SANTA ANA COLLEGE

I HEREBY CERTIFY THAT THIS PLAN, SPECIFICATION OR REPORT WAS PREPARED BY ME OR UNDER MY DIRECT SUPERVISION AND THAT I AM A DULY LICENSED ARCHITECT UNDER THE LAWS OF THE STATE OF CA.

JAMES G. MATSON — LICENSED ARCHITECT — No. C13036 — REGISTERED 31 DEC 2017 — STATE OF CALIFORNIA

NAME: JAMES G. MATSON
DATE: MAY 16, 2017
REGISTRATION NUMBER: C13036

NO	DESCRIPTION	DATE
2	Addendum 2	9/1/17

ISSUANCE HISTORY - THIS SHEET

DRAWN BY: MS | REVIEW BY: Approver

HGA NO: 3584-001-00

SITE - ENLARGED PLANS AND DETAILS

DATE: JULY 06, 2017

A066

ADDENDA PACKAGE

© COPYRIGHT HAMMEL, GREEN AND ABRAHAMSON, INC.

C:\Users\mstacy\Documents\Revit Local Files\A16-3584-001-05_SAC-SC_mstacy.rvt
9/1/2017 2:58:15 PM
MS

IDENTIFICATION		DOOR					FRAME			DETAILS								
DOOR NUMBER	ROOM NAME	WIDTH	HEIGHT	TYPE	GLAZING TYP	FINISH	TYPE	GLAZING TYP	FINISH	HEAD	JAMB	SILL/ THRESHOLD	RATING (MIN)	HDWE GROUP	ELEC	ALARM	SECURITY TYPE	NOTES
100-1A	CORRIDOR	6' - 0"	7' - 6"	STL-FR	GL-63	PT-5D	SF3	GL-63	PT-5D	6 / A443	3 / A443	10D/ A081	60 MIN.	SH-1	X	X	CR	PH, ADO
100A	CORRIDOR	6' - 0"	7' - 6"	STL-FR	GL-63	PT-5D	SF5	GL-63	PT-5D	6 / A443	3 / A443	10D/ A081	60 MIN.	SH-1A	X	X	CR	PH, ADO
100B	CORRIDOR	6' - 0"	8' - 0"	AL	GL-1T	PT-5D	CW3	GL-1T	PT-5D	2 / A434	1 / A456	10D/ A081	--	SH-1A.1	X	X	CR	PH, ADO
101A	RESTROOM	3' - 0"	7' - 6"	HM-F	--	PT-2D	HM-001	--	PT-5D	6B/ A081	6A/ A081	9 / A081	--	HW-2	--	--	--	--
102A	MEN'S RESTROOM	3' - 0"	7' - 6"	HM-F	--	PT-2D	HM-001	--	PT-5D	6B/ A081	6A/ A081	--	--	HW-1	--	--	--	--
103-1A	MODEL STORAGE / LOCKERS	3' - 0"	7' - 6"	WD-F	--	WD-1	HM-001	--	PT-5D	6B/ A081	6A/ A081	--	--	HW-5C	--	--	--	--
103-2A	WORK ROOM	3' - 0"	7' - 6"	AL-FG	GL-1T	PT-5D	F1	--	PT-5D	5B/ A081	2 / A451	--	--	HW-1B	--	--	--	--
103A	SCIENCE LEARNING CENTER	3' - 0"	7' - 6"	WD-NV	GL-62	WD-1	HM-100A	GL-62	PT-5D	3B/ A081	3A/ A081	--	45 MIN.	SH-7A	--	X	CR	WMR, PH, DPS
103B	SCIENCE LEARNING CENTER	3' - 0"	8' - 0"	AL-FG	GL-1T	PT-5D	SF1	GL-1T	PT-5D	1 / A431SIM	4 / A451	10D/ A081	--	SH-6	--	X	CR	--
103C	SCIENCE LEARNING CENTER	11' - 0"	11' - 0"	CD-1	--	--	--	--	--	2 / A667	7 / A664	--	90 MIN.	MFR	X	--	--	--
103D	SCIENCE LEARNING CENTER	15' - 0"	11' - 0"	CD-1	--	--	--	--	--	2 / A667	7 / A664	--	90 MIN.	MFR	X	--	--	--
104A	WOMEN'S RESTROOM	3' - 0"	7' - 6"	HM-F	--	PT-2D	HM-001	--	PT-5D	6B/ A081	6A/ A081	9 / A081	--	HW-1	--	--	--	--
105A	LOBBY	6' - 0"	8' - 0"	AL	GL-1T	PT-5D	CW1	GL-1T	PT-5D	1 / A431	1 / A452	10D/ A081	--	SH-1A.1	X	X	CR	PH, ADO
105B	LOBBY	6' - 0"	8' - 0"	AL	GL-1T	PT-5D	CW1	GL-1T	PT-5D	1 / A431	1 / A452	10D/ A081	--	SH-4	--	X	CR	PH, DPS
106A	CUSTODIAL	3' - 0"	7' - 6"	HM-F	--	PT-2D	HM-001	--	PT-5D	6B/ A081	6A/ A081	--	--	HW-5	--	--	--	--
107A	MACHINE ROOM	4' - 0"	7' - 6"	HM-F	--	PT-2D	HM-001	--	PT-5D	6B/ A081	6A/ A081	--	45 MIN.	SH-5A	--	X	--	--
109A	BDF	4' - 0"	7' - 6"	HM-F	--	PT-4D	HM-001	--	PT-4D	6B/ A081	6A/ A081	--	45 MIN.	SH-2A.1	--	X	CR	--
110A	VESTIBULE	3' - 0"	7' - 6"	WD-NV	GL-1	WD-1	HM-110A	GL-7(T), GL-1	PT-5D	2B/ A081	2A/ A081	--	--	SH-2B.1	--	X	CR	
110C	CONFERENCE	3' - 0"	7' - 6"	WD-F	--	WD-1	HM-001	--	PT-5D	6B/ A081	6A/ A081	--	--	HW-1A	--	--	--	-- 2
111A	LARGE CLASSROOM	3' - 0"	7' - 6"	WD-NV	GL-62	WD-1	HM-110A	GL-62T, GL-7(T)	PT-5D	3B/ A081	3A/ A081	--	45 MIN.	SH-9	--	X	CR	PH
111B	LARGE CLASSROOM	3' - 0"	7' - 6"	WD-NV	GL-62	WD-1	HM-110A	GL-62T, GL-7(T)	PT-5D	3B/ A081	3A/ A081	10B/ A081	45 MIN.	SH-9A	--	X	I/L111A	PH, WMR, ADB
113-1A	LARGE CLASSROOM (DIVISIBLE)	3' - 0"	7' - 6"	WD-NV	GL-62	WD-1	HM-110A	GL-62T, GL-7(T)	PT-5D	3B/ A081	3A/ A081	--	45 MIN.	SH-9A	--	X	CR	PH
113-2A	LARGE CLASSROOM (DIVISIBLE)	3' - 0"	7' - 6"	WD-NV	GL-62	WD-1	HM-110A	GL-62T, GL-7(T)	PT-5D	3B/ A081	3A/ A081	--	45 MIN.	SH-9	--	X	CR	PH
114A	ELECTRICAL CLOSET	6' - 0"	7' - 6"	HM-F	--	PT-2D	HM-001	--	PT-5D	6B/ A081	6A/ A081	--	--	SH-14	--	X	--	--
114B	ELECTRICAL CLOSET	6' - 0"	7' - 6"	HM-F	--	PT-2D	HM-001	--	PT-5D	6B/ A081	6A/ A081	--	--	SH-14	--	X	--	--
115A	MULTI DISC COMPUTER LAB	3' - 0"	7' - 6"	WD-NV	GL-62	WD-1	HM-110A	GL-62T, GL-7(T)	PT-5D	3B/ A081	3A/ A081	--	--	SH-2B	--	X	CR	--
116-1A	OPEN OFFICE	3' - 0"	7' - 6"	WD-F	--	WD-1	HM-001	--	PT-5D	6B/ A081	6A/ A081	--	--	SH-2B.1	--	X	CR	--
116-1B	OFFICE	3' - 0"	7' - 6"	WD-F	--	WD-1	HM-001	--	PT-5D	6B/ A081	6A/ A081	--	--	SH-2B.1	--	X	CR	--
116A	RECEPTION	3' - 0"	7' - 6"	AL-FG	GL-1T	PT-5D	F5	--	PT-5D	2B/ A081	2A/ A081	--	--	SH-15	--	X	CR	I/L
116B	RECEPTION	3' - 0"	2' - 6"	WD-F	--	PLAM-2	--	--	PT-5D	--	6A/ A081	--	--	HW-3B	--	--	--	DOUBLE ACTING
118A	GEOLOGY / EARTH SCIENCE LAB	3' - 0"	7' - 6"	WD-NV	GL-1	WD-1	HM-110A	GL-7(T), GL-1	PT-5D	2B/ A081	2A/ A081	10B/ A081	--	SH-2B.3	--	X	CR	ADB
118B	GEOLOGY / EARTH SCIENCE LAB	4' - 6"	7' - 6"	WD-NV2	GL-1	WD-1	HM-100A	GL-1	PT-5D	2B/ A081	6A/ A081	10B/ A081	--	SH-7E 2	--	X	I/L 118A	ADB, UNEQUAL: 3'-0", 1'-6"
120A	GEOLOGY / PHYSICAL SCIENCE PREP & STORAGE	4' - 6"	7' - 6"	WD-NV2	GL-1	WD-1	HM-100A	GL-1	PT-5D	2B/ A081	6A/ A081	--	--	SH-7B	--	X	CR	UNEQUAL: 3'-0", 1'-6"
120B	GEOLOGY / PHYSICAL SCIENCE LAB & LECTURE	3' - 0"	7' - 6"	WD-F	--	WD-1	HM-001	--	PT-5D	6B/ A081	6A/ A081	--	--	HW-3A	--	--	--	--
120C	GEOLOGY / EARTH SCIENCE LAB	3' - 0"	7' - 6"	WD-F	--	WD-1	HM-001	--	PT-5D	6B/ A081	6A/ A081	--	--	HW-3A	--	--	--	--
122A	GEOLOGY / PHYSICAL SCIENCE LAB & LECTURE	3' - 0"	7' - 6"	WD-NV	GL-1	WD-1	HM-110A	GL-7(T), GL-1	PT-5D	2B/ A081	2A/ A081	--	--	SH-2B.3	--	X	CR	--
122B	GEOLOGY / PHYSICAL SCIENCE LAB & LECTURE	4' - 6"	7' - 6"	WD-NV2	GL-1	WD-1	HM-100A	GL-1	PT-5D	2B/ A081	6A/ A081	--	--	SH-7E 2	--	X	I/L 122A	ADB, UNEQUAL: 3'-0", 1'-6"
124A	STORAGE	3' - 0"	7' - 6"	HM-F	--	PT-2D	HM-001	--	PT-5D	6B/ A081	6A/ A081	--	--	SH-12	--	X	2 CR	--
126A	EMERGENCY ELECTRICAL	3' - 0"	7' - 6"	HM-F	--	PT-2D	HM-001	--	PT-5D	6B/ A081	6A/ A081	10B/ A081	--	SH-8	--	X	--	PH
128A	MECHANICAL ROOM	6' - 0"	7' - 6"	HM-F	--	PT-2D	HM-001	--	PT-5D	6B/ A081	6A/ A081	10B/ A081	--	SH-5	--	X	--	--
128B	MECHANICAL ROOM	3' - 0"	7' - 6"	HM-F	--	PT-2D	HM-001	--	PT-5D	6B/ A081	6A/ A081	--	--	SH-2A	--	X	CR	--
130A	MAIN ELECTRICAL	4' - 0"	7' - 6"	HM-F	--	PT-2D	HM-001	--	PT-5D	6B/ A081	6A/ A081	--	45 MIN.	SH-13	--	X	--	PH
132A	ENGINEERING PREP & STORAGE	3' - 0"	7' - 6"	WD-NV	GL-1	WD-1	HM-110A	GL-7(T), GL-1	PT-5D	2B/ A081	2A/ A081	--	--	SH-12	--	X	CR	--
132B	ENGINEERING PREP & STORAGE	3' - 0"	7' - 6"	WD-F	--	WD-1	HM-001	--	PT-5D	6B/ A081	6A/ A081	--	--	HW-3A	--	--	--	--
134A	ENGINEERING LAB	3' - 0"	7' - 6"	WD-NV	GL-1	WD-1	HM-110A	GL-7(T), GL-1	PT-5D	2B/ A081	2A/ A081	10B/ A081	--	SH-2B.3	--	X	CR	ADB
134B	ENGINEERING LAB	6' - 0"	7' - 6"	WD-NV	GL-1	WD-1	HM-100A	GL-1	PT-5D	2B/ A081	2A/ A081	10B/ A081	--	SH-11B	--	--	I/L 134A	EPH, ADB
200-1A	CORRIDOR	6' - 0"	7' - 6"	STL-FR	GL-63	PT-5D	SF3	GL-63	PT-5D	6 / A443	3 / A443	--	60 MIN.	SH-1B	X	X	CR	PH
200-1B	CORRIDOR	3' - 0"	7' - 6"	WD-NV	GL-62	WD-1	HM-001	--	PT-5D	2B/ A081	2A/ A081	--	45 MIN.	HW-7	--	--	--	PH, MHO
200-1C	STAIR #2	3' - 0"	7' - 6"	GATE	--	PT-5E	--	--	--	NOTE 4	NOTE 4	--	--	HW-20	--	--	--	PH
200A	CORRIDOR	6' - 0"	7' - 6"	STL-FR	GL-63	PT-5D	SF5	GL-63	PT-5D	6 / A443	3 / A443	--	60 MIN.	SH-1B	X	X	CR	PH
200B	STAIR #1	3' - 0"	7' - 6"	GATE	--	PT-5E	--	--	--	NOTE 4	NOTE 4	--	--	HW-20	--	--	--	PH
201-1A	OFFICE	3' - 0"	7' - 6"	WD-NV	GL-1	WD-1	HM-100A	GL-1	PT-5D	2B/ A081	2A/ A081	10B/ A081	--	SH-2B.1	--	X	CR	ADB
201-2A	OFFICE	3' - 0"	7' - 6"	WD-NV	GL-1	WD-1	HM-100A	GL-1	PT-5D	2B/ A081	2A/ A081	10B/ A081	--	SH-2B.1	--	X	CR	ADB
201-3A	OFFICE	3' - 0"	7' - 6"	WD-NV	GL-1	WD-1	HM-100A	GL-1	PT-5D	2B/ A081	2A/ A081	10B/ A081	--	SH-2B.1	--	X	CR	ADB
201-4A	OFFICE	3' - 0"	7' - 6"	WD-NV	GL-1	WD-1	HM-100A	GL-1	PT-5D	2B/ A081	2A/ A081	10B/ A081	--	SH-2B.1	--	X	CR	ADB
201-5A	OFFICE	3' - 0"	7' - 6"	WD-NV	GL-1	WD-1	HM-100A	GL-1	PT-5D	2B/ A081	2A/ A081	10B/ A081	--	SH-2B.1	--	X	CR	ADB
201-6A	OFFICE	3' - 0"	7' - 6"	WD-NV	GL-1	WD-1	HM-100A	GL-1	PT-5D	2B/ A081	2A/ A081	10B/ A081	--	SH-2B.1	--	X	CR	ADB
201-7A	OFFICE	3' - 0"	7' - 6"	WD-NV	GL-1	WD-1	HM-100A	GL-1	PT-5D	2B/ A081	2A/ A081	10B/ A081	--	SH-2B.1	--	X	CR	ADB
201A	CORRIDOR	3' - 0"	7' - 6"	WD-NV	GL-1	WD-1	HM-110A	GL-7(T), GL-1	PT-5D	2B/ A081	2A/ A081	10B/ A081	--	SH-2B.1	--	X	CR	ADB
201B	CORRIDOR	3' - 0"	7' - 6"	WD-F	--	WD-1	HM-001	--	PT-5D	6B/ A081	6A/ A081	10B/ A081	--	SH-2.1	--	X	CR	ADB
202A	MEN'S RESTROOM	3' - 0"	7' - 6"	HM-F	--	PT-2D	HM-001	--	PT-5D	6B/ A081	6A/ A081	9 / A081	--	HW-1	--	--	--	--
203A	RESTROOM	3' - 0"	7' - 6"	HM-F	--	PT-2D	HM-001	--	PT-5D	6B/ A081	6A/ A081	9 / A081	--	HW-2	--	--	--	--
204A	WOMEN'S RESTROOM	3' - 0"	7' - 6"	HM-F	--	PT-2D	HM-001	--	PT-5D	6B/ A081	6A/ A081	9 / A081	--	HW-1	--	--	--	--
206A	CUSTODIAL	3' - 0"	7' - 6"	HM-F	--	PT-2D	HM-001	--	PT-5D	6B/ A081	6A/ A081	--	--	HW-5	--	--	--	--
208A	CLASSROOM	3' - 0"	7' - 6"	WD-NV	GL-1	WD-1	HM-110A	GL-7(T), GL-1	PT-5D	2B/ A081	2A/ A081	--	--	SH-2B.1	--	X	CR	ADB
209A	STAFF ROOM	3' - 0"	7' - 6"	HM-F	--	PT-2D	HM-001	--	PT-5D	6B/ A081	6A/ A081	--	--	HW-3C	--	--	--	-- 2
210A	ELEC. CLOSET	3' - 0"	7' - 6"	HM-F	--	PT-2D	HM-001	--	PT-5D	6B/ A081	6A/ A081	--	--	HW-5	--	--	--	--
211A	IDF	4' - 0"	7' - 6"	HM-F	--	PT-2D	HM-001	--	PT-5D	6B/ A081	6A/ A081	--	--	SH-2A	--	X	CR	--
212A	MOLECULAR BIOLOGY LAB	4' - 6"	7' - 6"	WD-NV2	GL-1	WD-1	HM-100A	GL-1	PT-5D	2B/ A081	6A/ A081	10B/ A081	--	SH-7E 2	--	X	CR	ADB, UNEQUAL: 3'-0", 1'-6"
212B	MOLECULAR BIOLOGY LAB	3' - 0"	7' - 6"	WD-NV	GL-1	WD-1	HM-110A	GL-7(T), GL-1	PT-5D	2B/ A081	2A/ A081	10B/ A081	--	SH-2B	--	X	I/L212A	ADB
213A	PHYSIOLOGY LAB	4' - 6"	7' - 6"	WD-NV2	GL-1	WD-1	HM-100A	GL-1	PT-5D	2B/ A081	6A/ A081	10B/ A081	--	SH-7E 2	--	X	CR	ADB, UNEQUAL: 3'-0", 1'-6"
213B	PHYSIOLOGY LAB	3' - 0"	7' - 6"	WD-NV	GL-1	WD-1	HM-110A	GL-7(T), GL-1	PT-5D	2B/ A081	2A/ A081	10B/ A081	--	SH-2B	--	X	I/L213A	ADB
213C	PHYSIOLOGY LAB	3' - 0"	7' - 6"	WD-F	--	WD-1	HM-001	--	PT-5D	6B/ A081	6A/ A081	--	--	HW-3A	--	--	--	--
214A	MOLECULAR BIOLOGY PREP & STORAGE	4' - 6"	7' - 6"	WD-NV2	GL-1	WD-1	HM-100A	GL-1	PT-5D	2B/ A081	6A/ A081	--	--	SH-7B	--	X	CR	UNEQUAL: 3'-0", 1'-6"
214B	MICROBIOLOGY LAB	3' - 0"	7' - 6"	WD-F	--	WD-1	HM-001	--	PT-5D	6B/ A081	6A/ A081	--	--	HW-3A	--	--	--	--
214C	MOLECULAR BIOLOGY LAB	3' - 0"	7' - 6"	WD-F	--	WD-1	HM-001	--	PT-5D	6B/ A081	6A/ A081	--	--	HW-3A	--	--	--	--

IDENTIFICATION		DOOR					FRAME			DETAILS								
DOOR NUMBER	ROOM NAME	WIDTH	HEIGHT	TYPE	GLAZING TYP	FINISH	TYPE	GLAZING TYP	FINISH	HEAD	JAMB	SILL/ THRESHOLD	RATING (MIN)	HDWE GROUP	ELEC	ALARM	SECURITY TYPE	NOTES
215A	ANATOMY & PHYSIOLOGY PREP & STORAGE	3' - 0"	7' - 6"	WD-NV	GL-1	WD-1	HM-110A	GL-7(T)	PT-5D	2B/ A081	2A/ A081	--	--	SH-2D	--	X	CR	--
215B	ANATOMY LAB	3' - 0"	7' - 6"	WD-F	--	WD-1	HM-001	--	PT-5D	6B/ A081	6A/ A081	--	--	HW-3A	--	--	--	--
216A	MICROBIOLOGY LAB	4' - 6"	7' - 6"	WD-NV2	GL-1	WD-1	HM-100A	GL-1	PT-5D	2B/ A081	6A/ A081	--	--	SH-7	--	X	I/L216B	PH, UNEQUAL: 3'-0", 1'-6"
216B	MICROBIOLOGY LAB	3' - 0"	7' - 6"	WD-NV	GL-1	WD-1	HM-110A	GL-7(T), GL-1	PT-5D	2B/ A081	2A/ A081	--	--	SH-2B	--	X	CR	--
217-1A	CADAVER ROOM	3' - 0"	7' - 6"	WD-F	--	WD-1	HM-001	--	PT-5D	6B/ A081	6A/ A081	10B/ A081	--	HW-12A	--	--	--	ADB
217A	ANATOMY LAB	3' - 0"	7' - 6"	WD-NV	GL-1	WD-1	HM-110A	GL-1	PT-5D	2B/ A081	2A/ A081	--	--	SH-2B	--	X	CR	--
217B	ANATOMY LAB	4' - 6"	7' - 6"	WD-NV2	GL-1	WD-1	HM-100A	GL-7(T), GL-1	PT-5D	2B/ A081	6A/ A081	--	--	SH-7	--	X	I/L 217A	UNEQUAL: 3'-0", 1'-6" 2
218A	GENERAL BIOLOGY LAB	3' - 0"	7' - 6"	WD-NV	GL-1	WD-1	HM-110A	GL-7(T), GL-1	PT-5D	2B/ A081	2A/ A081	--	--	SH-2C	--	X	CR	--
218B	GENERAL BIOLOGY LAB	4' - 6"	7' - 6"	WD-NV2	GL-1	WD-1	HM-100A	GL-1	PT-5D	2B/ A081	6A/ A081	--	--	SH-7B	--	X	I/L 218A	DPS, UNEQUAL: 3'-0", 1'-6"
220A	ORGANISMAL BIOLOGY LAB	3' - 0"	7' - 6"	WD-F	--	WD-1	HM-001	--	PT-5D	6B/ A081	6A/ A081	--	--	HW-3A	--	--	--	--
220B	GENERAL BIOLOGY LAB	3' - 0"	7' - 6"	WD-F	--	WD-1	HM-001	--	PT-5D	6B/ A081	6A/ A081	--	--	HW-3A	--	--	--	--
220C	GENERAL & ORGANISMAL PREP & STORAGE	4' - 6"	7' - 6"	WD-NV2	GL-1	WD-1	HM-100A	GL-1	PT-5D	2B/ A081	6A/ A081	--	--	SH-7B	--	X	CR	UNEQUAL: 3'-0", 1'-6"
222A	WASTE	3' - 0"	7' - 6"	HM-F	--	PT-2D	HM-001	--	PT-5D	6B/ A081	6A/ A081	--	--	SH-2B.1	--	X	CR	ADB
224A	ELEC. CLOSET	6' - 0"	7' - 6"	HM-F	--	PT-2D	HM-001	--	PT-5D	6B/ A081	6A/ A081	--	--	SH-14	--	X	--	--
224B	ELEC. CLOSET	6' - 0"	7' - 6"	HM-F	--	PT-2D	HM-001	--	PT-5D	6B/ A081	6A/ A081	--	--	SH-14	--	X	--	--
226A	ORGANISMAL BIOLOGY LAB	3' - 0"	7' - 6"	WD-NV	GL-1	WD-1	HM-110A	GL-7(T), GL-1	PT-5D	2B/ A081	2A/ A081	--	--	SH-2B	--	X	CR	--
226B	ORGANISMAL BIOLOGY LAB	4' - 6"	7' - 6"	WD-NV2	GL-1	WD-1	HM-100A	GL-1	PT-5D	2B/ A081	6A/ A081	--	--	SH-7	--	X	I/L 226A	UNEQUAL PAIR: 3'-0", 1'-6"
300-1A	CORRIDOR	6' - 0"	7' - 6"	STL-FR	GL-63	PT-5D	SF4	GL-63	PT-5D	6 / A443	3 / A443	--	60 MIN.	SH-1B	--	X	CR	PH
300A	CORRIDOR	6' - 0"	7' - 6"	STL-FR	GL-63	PT-5D	SF5	GL-63	PT-5D	6 / A443	3 / A443	--	60 MIN.	SH-1B	--	X	CR	PH
301-1A	OFFICE	3' - 0"	7' - 6"	WD-NV	GL-1	WD-1	HM-100A	GL-1	PT-5D	2B/ A081	2A/ A081	10B/ A081	--	SH-2B.1	--	X	CR	ADB
301-2A	OFFICE	3' - 0"	7' - 6"	WD-NV	GL-1	WD-1	HM-100A	GL-1	PT-5D	2B/ A081	2A/ A081	10B/ A081	--	SH-2B.1	--	X	CR	ADB
301-3A	OFFICE	3' - 0"	7' - 6"	WD-NV	GL-1	WD-1	HM-100A	GL-1	PT-5D	2B/ A081	2A/ A081	10B/ A081	--	SH-2B.1	--	X	CR	ADB
301-4A	OFFICE	3' - 0"	7' - 6"	WD-NV	GL-1	WD-1	HM-100A	GL-1	PT-5D	2B/ A081	2A/ A081	10B/ A081	--	SH-2B.1	--	X	CR	ADB
301-5A	OFFICE	3' - 0"	7' - 6"	WD-NV	GL-1	WD-1	HM-100A	GL-1	PT-5D	2B/ A081	2A/ A081	10B/ A081	--	SH-2B.1	--	X	CR	ADB
301-6A	OFFICE	3' - 0"	7' - 6"	WD-NV	GL-1	WD-1	HM-100A	GL-1	PT-5D	2B/ A081	2A/ A081	10B/ A081	--	SH-2B.1	--	X	CR	ADB
301-7A	OFFICE	3' - 0"	7' - 6"	WD-NV	GL-1	WD-1	HM-100A	GL-1	PT-5D	2B/ A081	2A/ A081	10B/ A081	--	SH-2B.1	--	X	CR	ADB
301A	CORRIDOR	3' - 0"	7' - 6"	WD-NV	GL-1	WD-1	HM-110A	GL-7(T), GL-1	PT-5D	2B/ A081	2A/ A081	10B/ A081	---	SH-2B	--	X	CR	ADB
301B	CORRIDOR	3' - 0"	7' - 6"	WD-F	--	WD-1	HM-001	--	PT-5D	6B/ A081	6A/ A081	10B/ A081	--	SH-2.1	--	X	CR	ADB
302A	MEN'S RESTROOM	3' - 0"	7' - 6"	HM-F	--	PT-2D	HM-001	--	PT-5D	6B/ A081	6A/ A081	9 / A081	--	HW-1	--	--	--	--
303A	RESTROOM	3' - 0"	7' - 6"	HM-F	--	PT-2D	HM-001	--	PT-5D	6B/ A081	6A/ A081	9 / A081	--	HW-2	--	--	--	--
304A	WOMEN'S RESTROOM	3' - 0"	7' - 6"	HM-F	--	PT-2D	HM-001	--	PT-5D	6B/ A081	6A/ A081	9 / A081	--	HW-1	--	--	--	--
306A	CUSTODIAL	3' - 0"	7' - 6"	HM-F	--	PT-2D	HM-001	--	PT-5D	6B/ A081	6A/ A081	--	--	HW-5	--	--	--	--
307A	IDF	4' - 0"	7' - 6"	HM-F	--	PT-2D	HM-001	--	PT-5D	6B/ A081	6A/ A081	--	--	SH-2A	--	X	CR	--
308A	CLASSROOM	3' - 0"	7' - 6"	WD-NV	GL-1	WD-1	HM-110A	GL-7(T), GL-1	PT-5D	2B/ A081	2A/ A081	--	--	SH-2B.1	--	X	CR	ADB 2
309A	CHEMISTRY LAB	3' - 0"	7' - 6"	WD-NV	GL-1	WD-1	HM-110A	GL-7(T), GL-1	PT-5D	2B/ A081	2A/ A081	--	--	2 SH-2B	--	X	CR	ADB
309B	CHEMISTRY LAB	4' - 6"	7' - 6"	WD-NV2	GL-1	WD-1	HM-100A	GL-1	PT-5D	2B/ A081	6A/ A081	--	--	SH-7	--	X	I/L 309A	UNEQUAL: 3'-0", 1'-6"; ADB 2
310A	ELEC. CLOSET	3' - 0"	7' - 6"	HM-F	--	PT-2D	HM-001	--	PT-5D	6B/ A081	6A/ A081	--	--	SH-5A	--	X	--	--
311A	WASTE	3' - 0"	7' - 6"	HM-F	--	PT-2D	HM-001	--	PT-5D	6B/ A081	6A/ A081	--	--	SH-2B.2	--	X	CR	--
312A	PHYSICS LAB	3' - 0"	7' - 6"	WD-NV	GL-1	WD-1	HM-110A	GL-7(T), GL-1	PT-5D	2B/ A081	2A/ A081	10B/ A081	--	SH-2	--	X	CR	ADB
312B	PHYSICS LAB	4' - 6"	7' - 6"	WD-NV2	GL-1	WD-1	HM-100A	GL-1	PT-5D	2B/ A081	6A/ A081	10B/ A081	--	SH-7C.1	--	X	I/L 312A	ADB, UNEQUAL: 3'-0", 1'-6"
313A	CHEMISTRY PREP & STORAGE	3' - 0"	7' - 6"	WD-NV	GL-1	WD-1	HM-110A	GL-7(T), GL-1	PT-5D	2B/ A081	2A/ A081	--	--	SH-2D	--	X	CR	--
313B	CHEMISTRY PREP & STORAGE	3' - 0"	7' - 6"	WD-F	--	WD-1	HM-001	--	PT-5D	6B/ A081	6A/ A081	--	--	HW-3A	--	--	--	--
313C	CHEMISTRY PREP & STORAGE	3' - 0"	7' - 6"	WD-F	--	WD-1	HM-001	--	PT-5D	6B/ A081	6A/ A081	--	--	HW-3A	--	--	--	--
314A	PHYSICS PREP & STORAGE	4' - 6"	7' - 6"	WD-NV2	GL-1	WD-1	HM-100A	GL-1	PT-5D	2B/ A081	6A/ A081	--	--	SH-7B	--	X	CR	UNEQUAL: 3'-0", 1'-6"
314B	PHYSICS LAB	3' - 0"	7' - 6"	WD-F	--	WD-1	HM-001	--	PT-5D	6B/ A081	6A/ A081	--	--	HW-3D	--	--	--	--
315A	CHEMISTRY LAB	3' - 0"	7' - 6"	WD-NV	GL-1	WD-1	HM-110A	GL-7(T), GL-1	PT-5D	2B/ A081	2A/ A081	--	--	SH-2B	--	X	CR	--
315B	CHEMISTRY LAB	4' - 6"	7' - 6"	WD-NV2	GL-1	WD-1	HM-100A	GL-1	PT-5D	2B/ A081	6A/ A081		--	SH-7	--	X	I/L 315A	UNEQUAL: 3'-0", 1'-6"
316A	CHEMISTRY LAB	3' - 0"	7' - 6"	WD-NV	GL-1	WD-1	HM-110A	GL-7(T), GL-1	PT-5D	2B/ A081	2A/ A081	--	--	SH-2B	--	X	CR	--
316B	CHEMISTRY LAB	4' - 6"	7' - 6"	WD-NV2	GL-1	WD-1	HM-100A	GL-1	PT-5D	2B/ A081	6A/ A081	--	--	SH-7	--	X	I/L 316A	UNEQUAL: 3'-0", 1'-6"
318A	CHEMISTRY PREP & STORAGE	4' - 6"	7' - 6"	WD-NV2	GL-1	WD-1	HM-100A	GL-1	PT-5D	2B/ A081	6A/ A081	--	--	SH-7B	--	X	CR	UNEQUAL: 3'-0", 1'-6"
318B	CHEMISTRY LAB	3' - 0"	7' - 6"	WD-F	--	WD-1	HM-001	--	PT-5D	6B/ A081	6A/ A081	--	--	HW-3A	--	--	--	--
320-1A	INSTRUMENT ROOM	3' - 0"	7' - 6"	WD-F	--	WD-1	HM-001	--	PT-5D	6B/ A081	6A/ A081	--	--	SH-2C.1	--	X	CR	--
320A	ORGANIC CHEMISTRY LAB	4' - 6"	7' - 6"	WD-NV2	GL-1	WD-1	HM-100A	GL-1	PT-5D	2B/ A081	6A/ A081	--	--	SH-7B	--	X	CR	UNEQUAL: 3'-0", 1'-6"
320B	ORGANIC CHEMISTRY LAB	3' - 0"	7' - 6"	WD-D	--	WD-1	HM-001	--	PT-5D	6B/ A081	6A/ A081	--	--	HW-5E	--	--	--	DUTCH DOOR
322-1A	CHEMICAL STORAGE	3' - 0"	7' - 6"	WD-F	--	WD-1	HM-001	--	PT-5D	6B/ A081	6A/ A081	--	45 MIN.	HW-5B	--	--	--	--
322-2A	CHEMICAL STORAGE	3' - 0"	7' - 6"	WD-F	--	WD-1	HM-001	--	PT-5D	6B/ A081	6A/ A081	--	45 MIN.	HW-5B	--	--	--	--
322A	CHEMISTRY LAB	3' - 0"	7' - 6"	WD-F	--	WD-1	HM-001	--	PT-5D	6B/ A081	6A/ A081	--	--	HW-3A	--	--	--	--
322B	CENTRALIZED PREP & STORAGE	4' - 6"	7' - 6"	WD-NV2	GL-1	WD-1	HM-100A	GL-1	PT-5D	2B/ A081	6A/ A081	--	--	SH-7B	--	X	CR	UNEQUAL: 3'-0", 1'-6"
324A	ELEC. CLOSET	6' - 0"	7' - 6"	HM-F	--	PT-2D	HM-001	--	PT-5D	6B/ A081	6A/ A081	--	--	SH-14	--	X	--	--
324B	ELEC. CLOSET	6' - 0"	7' - 6"	HM-F	--	PT-2D	HM-001	--	PT-5D	6B/ A081	6A/ A081	--	--	SH-14	--	X	--	--
326A	CHEMISTRY LAB	3' - 0"	7' - 6"	WD-NV	GL-1	WD-1	HM-110A	GL-7(T), GL-1	PT-5D	2B/ A081	2A/ A081	--	--	SH-2B.1	--	X	CR	--
326B	CHEMISTRY LAB	4' - 6"	7' - 6"	WD-NV2	GL-1	WD-1	HM-100A	GL-1	PT-5D	2B/ A081	6A/ A081	--	--	SH-7	--	X	I/L 326A	UNEQUAL: 3'-0", 1'-6"
400A	STAIR #1	4' - 0"	7' - 6"	GATE	--	PT-5E	--	--	--	NOTE 4	NOTE 4	--	--	SH-18	--	X	--	--
S1A		4' - 0"	6' - 10"	HM-F	--	PT-2D	HM-001	--	PT-5D	8A/ A081	8B/ A081	--	--	SH-8	X	X	CR	--
S1B		20' - 0"	8' - 0"	SLIDING GATE	--	PT-5E	--	--	--	NOTE 5	NOTE 5	--	--	HW-13	--	--	--	--
S2A		3' - 0"	7' - 6"	GATE	--	PT-5E	--	--	--	NOTE 4	NOTE 4	--	--	HW-18	--	--	--	--
SC001A	GREENHOUSE	6' - 0"	7' - 10"	AL	GL-21	PT-5D	MFR	GL-24T	PT-5D	5 / A081	5 / A081	--	--	SH-19	X	X	CR	PH
SC001B	GREENHOUSE	3' - 0"	7' - 6"	GATE	--	PT-1	--	--	--	NOTE 4	NOTE 4	--	--	SH-20	--	X	CR	PH
SC001C	GREENHOUSE	3' - 0"	7' - 6"	GATE	--	PT-1	--	--	--	NOTE 4	NOTE 4	--	--	SH-20	--	X	CR	PH

NOTES:

1. REFER TO SHEET A081 FOR ALL HEAD, JAMB, SILL, AND GLAZING DETAILS, UNLESS NOTED OTHERWISE.
2. REFERENCE CW/SF FRAME TYPES ON SHEET A491.
3. REFERENCE F FRAME TYPES ON SHEET A630.
4. REFERENCE SHEET A067 FOR GATE DETAILS.
5. REFERENCE SHEET A065 FOR SLIDING GATE DETAILS.

ABBREVIATIONS

ADB	AUTOMATIC DOOR BOTTOM	I/L	INTERLOCK, CR AT INDICATED DOOR UNLOCKS
ADO	AUTOMATIC DOOR OPERATOR	MFR	MANUFACTURER
AL	CLEAR ANODIZED ALUMINUM	MHO	MAGNETIC HOLD OPEN
CR	CARD READER	MP	METAL PANEL
DPS	DOOR POSITION SWITCH	PH	PANIC HARDWARE
EC	ELECTRONIC HARDWARE WITHOUT A CARD READER	FS	FIRE SHUTTER
EML	OMNI CARD READER STAND ALONE	WMR	WALL-MOUNTED READER
EH	ELECTRIC PANIC HARDWARE		

HGA
1918 Main Street, Third Floor
Santa Monica, California 90405
Telephone 310.557.7600

STRUCTURAL ENGINEER
SAIFUL BOUQUET
155 N LAKE AVE
PASADENA, CA 91101
626-304-2616

MECHANICAL & PLUMBING ENGINEER
STANTEC CONSULTING INC
14130 RIVERSIDE DR. # 201
SHERMAN OAKS, CA 91423
818-377-8220

ELECTRICAL ENGINEER
FBA ENGINEERING
150 PAULARINO AVE. #A120
COSTA MESA, CA 92626
949-852-9995

CIVIL ENGINEER
KPFF CONSULTING ENGINEERS
700 SOUTH FLOWER ST. #2100
LOS ANGELES, CA 90017
213-418-0201

LANDSCAPE ARCHITECT
LYNN CAPOUYA, INC.
17992 MITCHELL SOUTH, #110
IRVINE, CA 92614
949-756-0150

LABORATORY CONSULTANT
RESEARCH FACILITIES DESIGN
3965 FIFTH AVE. #400
SAN DIEGO, CA 92103
619-297-0159

SCIENCE CENTER
SANTA ANA COLLEGE

RANCHO SANTIAGO COMMUNITY COLLEGE DISTRICT

1530 W. 17TH ST.
SANTA ANA, CA 92706

SANTA ANA COLLEGE

I HEREBY CERTIFY THAT THIS PLAN, SPECIFICATION OR REPORT WAS PREPARED BY ME OR UNDER MY DIRECT SUPERVISION AND THAT I AM A DULY LICENSED ARCHITECT UNDER THE LAWS OF THE STATE OF CA.

LICENSED ARCHITECT JAMES G. MATSON C13036 SEPTEMBER 30, 2019 RENEWAL DATE STATE OF CALIFORNIA

NAME: JAMES G. MATSON
DATE: MAY 16, 2017
REGISTRATION NUMBER: C13036

NO	DESCRIPTION	DATE
2	Addendum 2	9/1/17

ISSUANCE HISTORY - THIS SHEET

DRAWN BY: SK | REVIEW BY: TE

HGA NO: 3584-001-00

DOOR AND FRAME SCHEDULE

DATE: JULY 06, 2017

ADDENDA PACKAGE

A082

© COPYRIGHT HAMMEL, GREEN AND ABRAHAMSON, INC.

SK 9/1/2017 2:58:24 PM C:\Users\lsstacyk\Documents\Revit Local Files\A16-3584-001-00 SAC SC lsstacyk.rvt

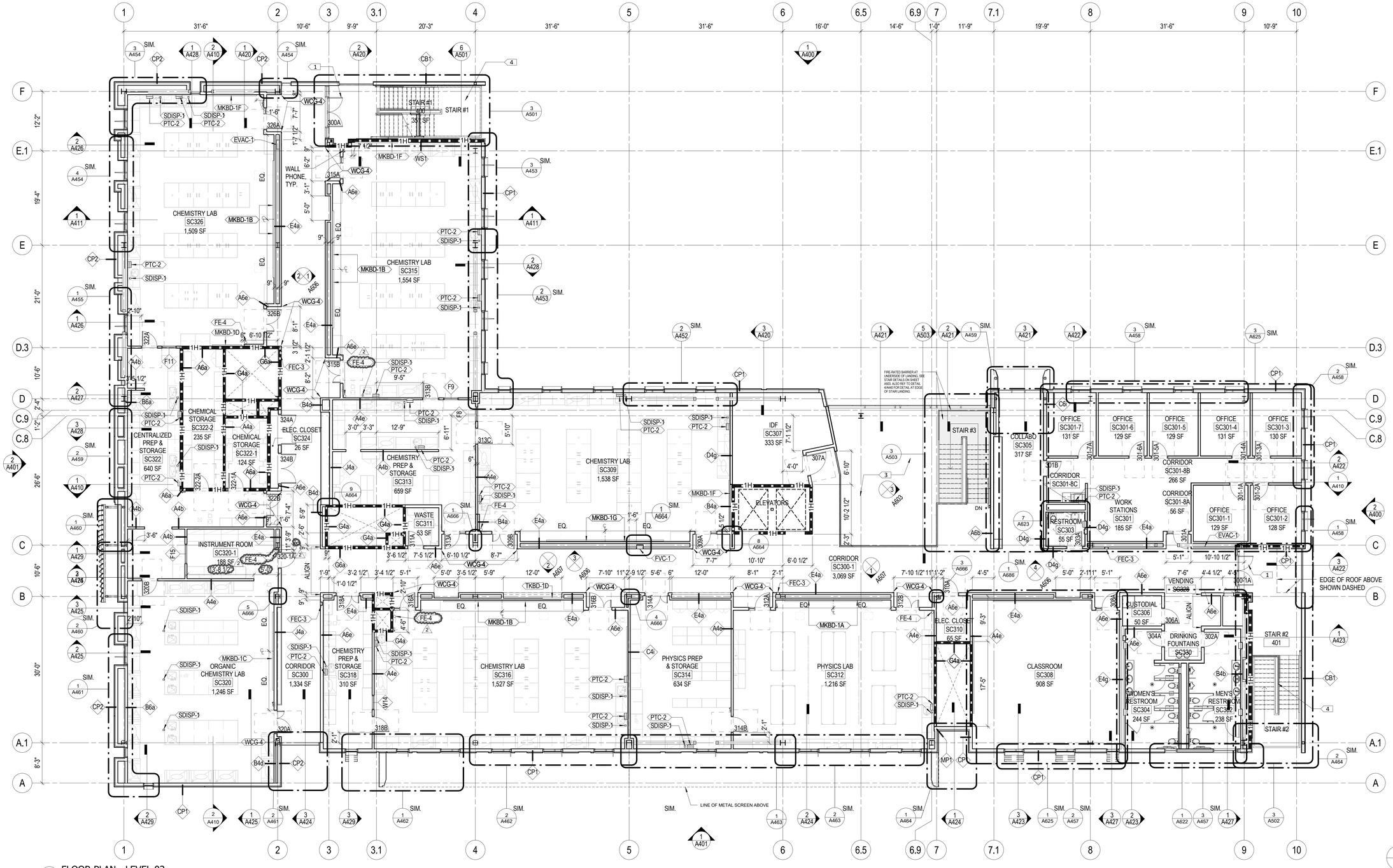

1 FLOOR PLAN - LEVEL 03
1/8" = 1'-0"

TYPICAL CLEARANCE AT DOORS

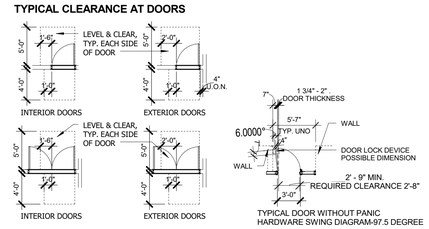

FLOOR PLAN LEGEND

WALL RATINGS

1HR — 1 HR RATED CONSTRUCTION RATING

NOTES AND SYMBOLS

- FLOOR DRAIN PER PLUMBING DRAWINGS
- MB — EXTERIOR WALL TYPE, SEE SHEET A450 FOR DETAILS
- A4 — INTERIOR WALL TYPE, SEE SHEET A660 FOR DETAILS
- 101A — DOOR NUMBER, SEE A082 FOR DOOR SCHEDULE
- AUTOMATIC DOOR OPENER

GENERAL NOTES - CONSTRUCTION PLAN

A. ALL INTERIOR PARTITIONS SHALL BE **"A4 ."** UNLESS NOTED OTHERWISE.
B. ALL DIMENSIONS ARE CLEAR FROM THE FACE OF FINISHED WALL/PARTITION TO FACE OF FINISHED WALL/PARTITION. SEE PARTITION TYPES FOR ACTUAL THICKNESS OF PARTITIONS. MASONRY WALLS ARE DIMENSIONED TO NOMINAL FACE.
C. ENSURE FINISH SURFACES ARE FLUSH AND SEAMLESS WHERE PARTITIONS AND/OR FURRING ARE COPLANAR.
D. ALL PIPING, CONDUITS AND RELATED MECHANICAL AND ELECTRICAL ITEMS SHALL BE CONCEALED WITHIN PARTITION/WALL ASSEMBLY IN FINISHED AREAS UNLESS NOTED OTHERWISE.
E. PROVIDE BACKING/BLOCKING TO SUPPORT ALL WALL-MOUNTED ITEMS. REFER TO DETAIL 1G/S0.50.
F. ALL MECHANICAL EQUIPMENT PADS TO BE 4" HIGH MINIMUM, UNLESS NOTED OTHERWISE. SIZE OF PADS TO BE VERIFIED BY CONTRACTOR
G. REFER TO SHEET A081 FOR DETAIL OF TYPICAL DOOR JAMB AT ABUTTING WALLS OR PARTITIONS.
H. ALL OFFICES TO HAVE A DOUBLE COAT HOOK <CH-2> MOUNTED ON THE DOOR (ROOM SIDE) UNLESS NOTED OTHERWISE.
I. CONTRACTOR TO PROTECT EXPOSED CONCRETE WORK DURING CONSTRUCTION.
J. ALL EXPOSED STRUCTURAL STEEL MEMBERS TO RECEIVE COATING AND FINISHING OF ARCHITECTURALLY EXPOSED METAL FABRICATION STEEL (AES) MATERIALS WITH HIGH PERFORMANCE COATINGS (HPC) PER SPECS SECTION 099600.
K. ALL MAKER BOARDS AND TACK BOARDS ARE TO BE MOUNTED AS TO HAVE THE BOTTOM AT 36" ABOVE FINSIH FLOOR UNLESS NOTED OTHERWISE.
L. BUTT JOINT, TYP. AT WHERE TWO (2) MARKER BOARD (NO FRAME REQUIRED), PROVIDE WALL RAIL <WR-1> ON ALL SIDES (EXCEPT THE FRONT) IN MULTI DISCIPLINARY COMPUTER LAB SC115, LARGE CLASSROOM (DIVISIBLE) SC113-1 AND SC 113-2, LARGE CLASSROOM SC111, AND CLASSROOMS SC208 AND SC308. REFER A600 FOR MOUNTING DETAILS.
M. REFER TO DETAIL 1/667 FOR CORNER GUARD DETAILS.
N. COORDINATE PAPER TOWEL AND SOAP DISPENSERS LOCATIONS WITH LAB PIPING, CASEWORK, AND EQUIPMENT.

KEYNOTES - FLOOR PLAN

#	DESCRIPTION
1	FIRE RATED GLASS DOOR AND SIDELITES
2	OUTLINE OF STRUCTURE ABOVE
3	OPEN TO BELOW
4	REQUIRED EXIT STAIR
5	CONVENIENCE STAIR
8	SINGLE PLY ADHERED ROOF <SPA-1>
9	MODIFIED BITUMEN ROOFING <MBR-3>
10	COMPOSITE METAL PANEL <MP-1>

hGA.
1918 Main Street, Third Floor
Santa Monica , California 90405
Telephone 310.557.7600

STRUCTURAL ENGINEER
SAIFUL BOUQUET
155 N LAKE AVE
PASADENA, CA 91101
626-304-2616

MECHANICAL & PLUMBING ENGINEER
STANTEC CONSULTING INC
14130 RIVERSIDE DR. # 201
SHERMAN OAKS, CA 91423
818-377-8220

ELECTRICAL ENGINEER
FBA ENGINEERING
150 PAULARINO AVE. #A120
COSTA MESA, CA 92626
949-852-9995

CIVIL ENGINEER
KPFF CONSULTING ENGINEERS
700 SOUTH FLOWER ST. #2100
LOS ANGELES, CA 90017
213-418-0201

LANDSCAPE ARCHITECT
LYNN CAPOUYA, INC.
17992 MITCHELL SOUTH, #110
IRVINE, CA 92614
949-756-0150

LABORATORY CONSULTANT
RESEARCH FACILITIES DESIGN
3965 FIFTH AVE. #400
SAN DIEGO, CA 92103
619-297-0159

SCIENCE CENTER
SANTA ANA COLLEGE
RANCHO SANTIAGO COMMUNITY COLLEGE DISTRICT

1530 W. 17TH ST.
SANTA ANA, CA 92706

SANTA ANA COLLEGE

I HEREBY CERTIFY THAT THIS PLAN, SPECIFICATION OR REPORT WAS PREPARED BY ME OR UNDER MY DIRECT SUPERVISION AND THAT I AM A DULY LICENSED ARCHITECT UNDER THE LAWS OF THE STATE OF CA.

NAME: JAMES G. MATSON
DATE: MAY 16, 2017
REGISTRATION NUMBER: C13036

NO	DESCRIPTION	DATE
2	Addendum 2	9/1/17

ISSUANCE HISTORY - THIS SHEET

DRAWN BY: MS | REVIEW BY: Approver

HGA NO: 3584-001-00

THIRD LEVEL FLOOR PLAN

DATE: JULY 06, 2017

A203

ADDENDA PACKAGE

© COPYRIGHT HAMMEL, GREEN AND ABRAHAMSON, INC.

MS 9/1/2017 2:58:46 PM C:\Users\ltsiaos\Documents\Revit Local Files\A16-3584-001-05_SAC-SC_ltsiaos.rvt

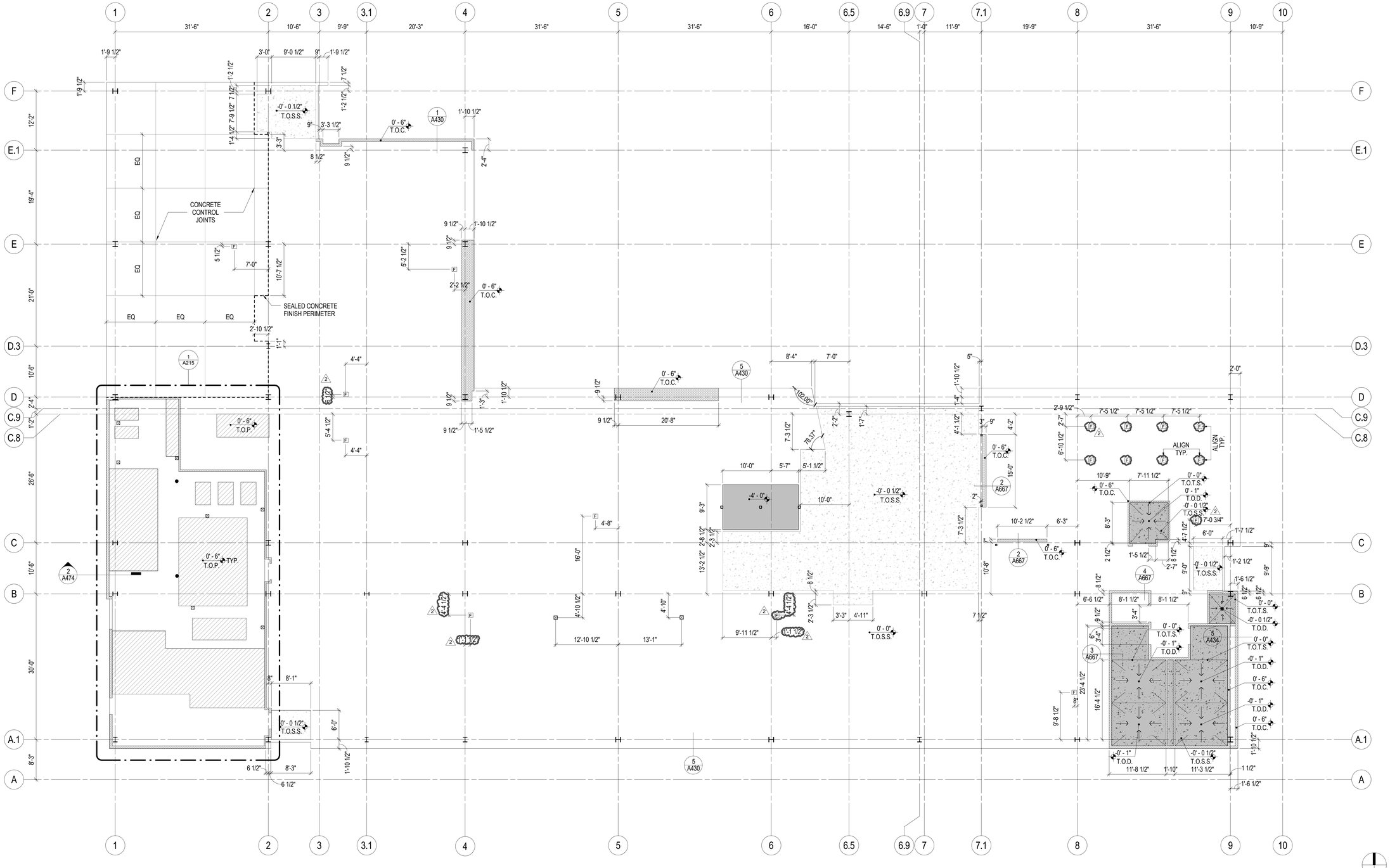

1 SLAB EDGE PLAN - LEVEL 01
1/8" = 1'-0"

SLAB PLAN LEGEND

NOTE:
1. EDGE OF SLAB CONDITION AT EXPOSED SLAB EDGE VARIES - SEE BUILDING ELEVATIONS AND DETAILS
2. TYPICAL STRUCTURAL SLAB DEPRESSION AT TOPPING SLAB LOCATIONS = -2" U.O.N.
3. ALL SLOPES ON WALKABLE SURFACES SHALL BE A MAXIMUM 2%
4. SLAB PLANS ARE INTENDED TO SHOW PRIMARY CURBS, DEPRESSIONS AND PENETRATIONS ON EACH FLOOR AND ROOF LEVELS. HOWEVER THEY ARE NOT INTENED TO BE AN EXHAUSTIVE REPRESENTATION OF EVERY PENETRATION NECESSARY TO ACCOMODATE ALL LINES, UTILITIES, FLOOR BOXES, POKE THROUGHS, ETC FOR MEP, AV, IT, LAB MEP, ETC.
5. DIMENSIONS AT FLOOR BOXES SHOWN ON ALL SLAB PLANS ARE APPROXIMATE. CONTRACTOR TO COORDINATE EXACT LOCATION OF FLOOR BOXES WITH APPROVED FURNITURE PLANS, TYP. ON ALL LEVELS.

STRUCTURAL CONCRETE SLAB OR SLAB ON GRADE PER STRUCTURAL DRAWINGS

SLAB OPENING

CONCRETE PAD - SEE PLAN FOR HEIGHT

DIRECTION OF DOWN SLOPE

SLOPED TOPPING SLAB OVER STRUCTURAL SLAB. SEE PLANS FOR POINT ELEVATIONS

TOP OF TOPPING SLAB, TYPICAL EACH SIDE, U.O.N.

STRUCTURAL CONCRETE SLAB - 48" DEPRESSION REQUIRED FOR ELEVATOR PIT

STRUCTURAL CONCRETE SLAB - SEE PLAN FOR DEPRESSION REQUIRED FOR FLOOR FINISH

CONCRETE CURB - WIDTH TO MATCH WALL STUD SIZE ABOVE, U.O.N.

BUILDING CONTROL POINT - SEE CIVIL DRAWINGS

- 2 1/2" T.O.S.S. POINT ELEVATION

FLOOR DRAIN PER PLUMBING DRAWINGS

FLOOR SINK PER PLUMBING DRAWINGS

F FLOOR BOX PER AV DRAWINGS

T.O.S.S.	TOP OF STRUCTURAL SLAB
T.O.T.S.	TOP OF TOPPING SLAB
T.O.D.	TOP OF DRAIN
T.O.C.	TOP OF CURB
T.O.P.	TOP OF PAD

HGA
1918 Main Street, Third Floor
Santa Monica, California 90405
Telephone 310.557.7600

STRUCTURAL ENGINEER
SAIFUL BOUQUET
155 N LAKE AVE
PASADENA, CA 91101
626-304-2616

MECHANICAL & PLUMBING ENGINEER
STANTEC CONSULTING INC
14130 RIVERSIDE DR. # 201
SHERMAN OAKS, CA 91423
818-377-8220

ELECTRICAL ENGINEER
FBA ENGINEERING
150 PAULARINO AVE. #A120
COSTA MESA, CA 92626
949-852-9995

CIVIL ENGINEER
KPFF CONSULTING ENGINEERS
700 SOUTH FLOWER ST. #2100
LOS ANGELES, CA 90017
213-418-0201

LANDSCAPE ARCHITECT
LYNN CAPOUYA, INC.
17992 MITCHELL SOUTH, #110
IRVINE, CA 92614
949-756-0150

LABORATORY CONSULTANT
RESEARCH FACILITIES DESIGN
3965 FIFTH AVE. #400
SAN DIEGO, CA 92103
619-297-0159

SCIENCE CENTER
SANTA ANA COLLEGE
RANCHO SANTIAGO COMMUNITY COLLEGE DISTRICT
1530 W. 17TH ST.
SANTA ANA, CA 92706

SANTA ANA COLLEGE

I HEREBY CERTIFY THAT THIS PLAN, SPECIFICATION OR REPORT WAS PREPARED BY ME OR UNDER MY DIRECT SUPERVISION AND THAT I AM A DULY LICENSED ARCHITECT UNDER THE LAWS OF THE STATE OF CA.

LICENSED ARCHITECT JAMES G. MATSON C13036 REGISTERED PROFESSIONAL ENGINEER SEPTEMBER 30, 2016 RENEWAL DATE STATE OF CALIFORNIA

NAME: JAMES G. MATSON
DATE: MAY 16, 2017
REGISTRATION NUMBER: C13036

NO	DESCRIPTION	DATE
2	Addendum 2	9/1/17

ISSUANCE HISTORY - THIS SHEET

DRAWN BY: MS | REVIEW BY: Approver

HGA NO: 3584-001-00

FIRST LEVEL SLAB PLAN

DATE: JULY 06, 2017

A211

ADDENDA PACKAGE

© COPYRIGHT HAMMEL, GREEN AND ABRAHAMSON, INC.

MS 9/1/2017 2:58:52 PM C:\Users\lsstacyk\Documents\Revit Local Files\A16-3584-001-00_SAC SC_lsstacyk.rvt

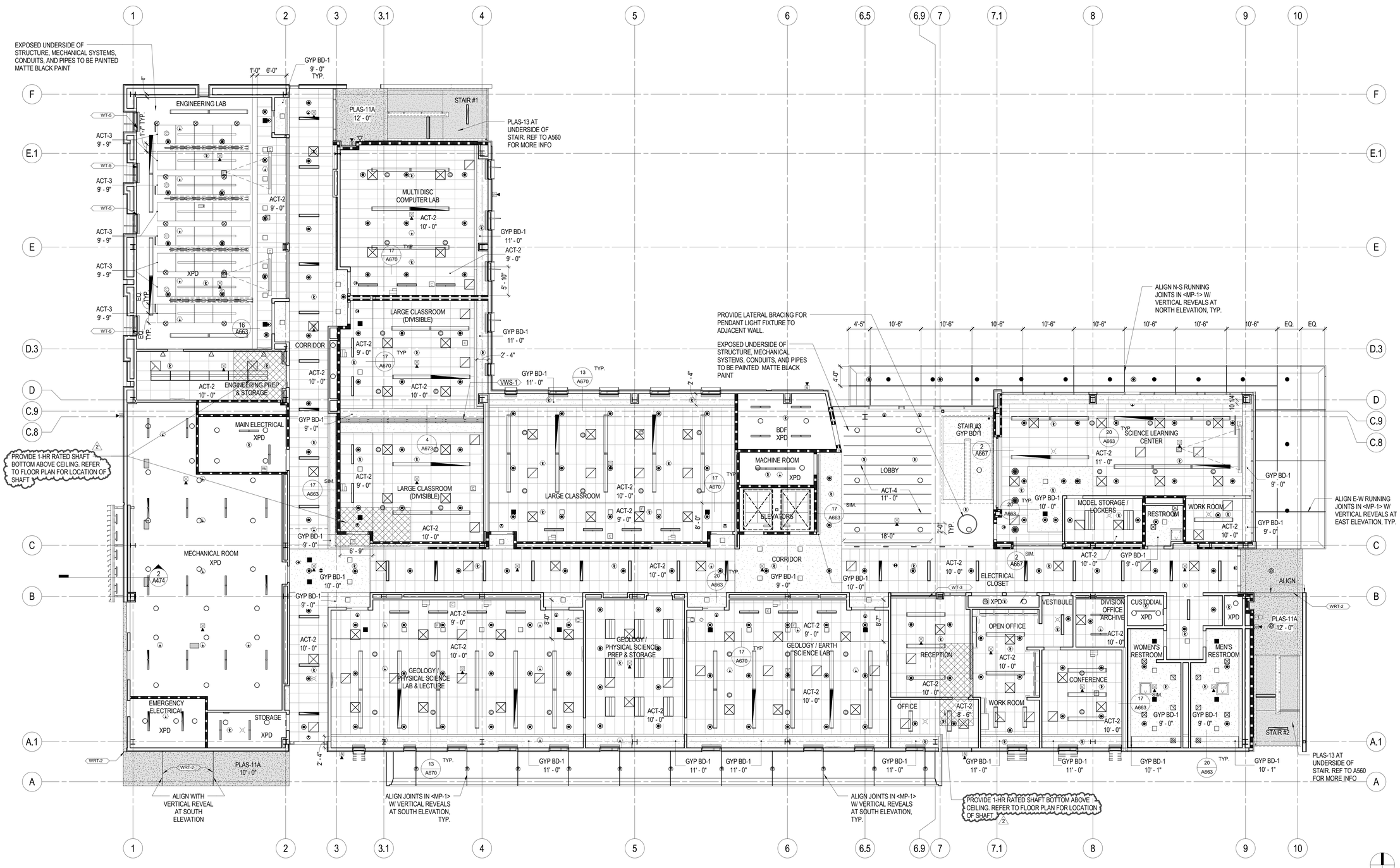

1 REFLECTED CEILING PLAN - LEVEL 01
1/8" = 1'-0"

REFLECTED CEILING PLAN LEGEND

- PLASTER SOFFIT PER 2 / A663 (PLAS-11A) (PLAS-11B) OR (PLAS-13) (WRT-2)
- FRAMED GYPSUM BOARD CEILING (GYP BD-1) PER 8 / A663
- SUSPENDED 2'x4' ACOUSTICAL PANEL CEILING (ACT-2) PER 1 / A670
- SUSPENDED 4'x4' ACOUSTICAL CLOUDS (ACT-3) PER 5 / A671
- SUSPENDED METAL BAFFLES (ACT-4) PER 6 / A671
- SUSPENDED WOOD CEILING (ACT-5) PER 1 / A671
- XPD — NO CEILING / EXPOSED TO STRUCTURE
- OPEN

FOR BOTTOM OF 1-HOUR RATED SHAFT ENCLOSURE, SEE 7 / A661

- SUSPENDED 6" ACOUSTICAL BAFFLES, VARYING LENGTHS (ASB-1)
- A2, A3 — PENDENT LIGHTING FIXTURE, SIZES VARY, SEE ELECTRICAL DWGS FOR MORE INFO.
- C1 — 2' x 4' RECESSED LIGHTING FIXTURE
- CL1, CL2 — COVE LIGHT, SIZES VARY
- D1 — 6" RECESSED DOWNLIGHT
- DL1 — CYLINDER DOWNLIGHT
- E1 — CEILING-MOUNTED STRIP LIGHT
- F1 — COVE LIGHTING FIXTURE
- G1 — 4.5" x 4.5" RECESSED DOWNLIGHT
- J1, J2 — LONG WALL-MOUNTED LIGHTING FIXTURE, SIZES VARY, SEE ELECTRICAL DWGS FOR MORE INFO.
- JL1 — LINEAR WALL-MOUNTED LIGHTING FIXTURE
- K1 — WALL-MOUNTED LIGHTING FIXTURE
- L1 — RECESSED EXTERIOR DOWNLIGHT
- M1 — 48" LONG WALL-MOUNTED LIGHTING FIXTURE
- N1 — 12'-0" RECESSED LINEAR LIGHTING FIXTURE
- PL1 — 48" DIAMETER PENDANT LIGHTING FIXTURE
- PL2 — 6" DIAMETER CYLINDER
- Q1 — 16" DIAMETER PENDANT LIGHTING FIXTURE
- S1 — EXTERIOR WALL WASH LIGHTING FIXTURE
- SL1 — CAMPUS WALKWAY LIGHTING FIXTURE
- SL3 — LIGHTING POLE
- SL4 — TREE UPLIGHTS
- SL5 — LIGHT STRIP-FLEXIBLE
- SL6 — CAMPUS PARKING LOT LIGHT FIXTURE- TWIN HEAD
- W1 — CEILING-MOUNTED STRIP LIGHT
- UNDER CABINET LIGHTING
- X1 — CEILING-MOUNTED EXIT SIGN
- X2 — PENDANT EXIT SIGN
- CEILING-MOUNTED HEAT DETECTOR
- CEILING-MOUNTED SMOKE DETECTOR
- ELECTRONIC VISUAL AND SPEAKER DEVICE
- FIRE ALARM HORN
- UPRIGHT SPRINKLER HEAD
- PENDENT SPRINKLER HEAD
- SIDEWALL SPRINKLER HEAD
- CEILING REGISTER/GRILLE FACE
- ACCESS PANEL
- WALL-MOUNTED ULTRA-SHORT THROW PROJECTOR. FOR ANCHORAGE, REF TO 1/AV701
- CEILING RECESSED / PENDANT LOUDSPEAKER
- CEILING-MOUNTED VIDEO PROJECTOR, REF TO DETAIL 1/AV702. FOR ANCHORAGE DETAIL, REF TO 10/S7.20.
- CEILING-MOUNTED PROJECTOR SCREEN, REF TO DETAIL 1/AV702. FOR ANCHORAGE, REF TO DETAIL 5/S7.20.
- PIPE DROP, REFER TO LAB DWGS FOR MORE INFO
- EYE WASH AND SAFETY SHOWER, REFER TO LAB DWGS FOR MORE INFO
- SNORKEL, REFER TO LAB DWGS FOR MORE INFO. FOR ANCHORAGE, REF 8/S7.20
- EXAM LIGHT, REFER TO LAB DWGS FOR MORE INFO. FOR ANCHORAGE, REF 8/S7.20
- FUME HOOD, REFER TO LAB DWGS FOR MORE INFO.

GENERAL NOTES - CEILING PLAN

A. SEE MECHANICAL AND ELECTRICAL DWGS FOR DEVICE AND FIXTURE TYPES, SIZES, QUANTITY, INSTALLATION & SPECIFICATIONS. DEVICES SHOWN ON THE ARCH PLANS & NOT ON ENGINEERING PLANS SHOULD BE BROUGHT TO ARCHITECT'S ATTENTION FOR CLARIFICATIONS.
B. ACT TILES SHALL BE CENTERED WITHIN ROOM(S) U.N.O. FULL CEILING TILE TO BE ALIGNED TO OTHER CEILING TYPES WITHIN THE ROOMS AS INDICATED ON PLANS.
C. CENTER RECESSED LIGHTS, ELECTRICAL, MECHANICAL DEVICES AND SPRINKLER HEADS WHEN SHOWN IN CEILING TILES. WHERE RECESSED LIGHTS ARE SHOWN OFF-CENTER IN 2X4 SCORED CEILING TILE, CENTER THE FIXTURE WITHIN THE 2X2 PORTION OF THE TILE.
D. PROVIDE ACCESS PANEL(S) AS REQUIRED. REVIEW LOCATION OF ACCESS PANEL(S) NOT SHOWN ON THE DRAWINGS WITH ARCHITECT PRIOR TO INSTALLATION.
E. CEILING FINISHES ADJACENT TO OR WITHIN THE LIMITS OF CONSTRUCTION DISTURBED OR DAMAGED BY CONSTRUCTION SHALL BE PATCHED TO MATCH EXISTING ADJACENT CEILING FINISH.
F. ALL <GYP-BD 1> CEILING TO BE PAINTED <PT-1C>. CEILING AT RESTROOMS TO BE PAINTED <PT-1B>.
G. ALL EXTERIOR WINDOWS TO HAVE SINGLE SHADE <WT-3> U.N.O. REFER TO SHEET A441 FOR MANUAL AND AUTOMATIC SHADES DTLS.
H. ACT TILE TO FRAME AROUND FUME HOODS WHERE OCCURS.
I. SHIFT FIXTURES/CEILING-MOUNTED EQUIPMENT IN THE CEILING OUT OF THE WAY WHERE IT INTERFERE WITH JOINTS IN THE CANOPY AND GYP CEILING. BRING TO THE ARCHITECT'S ATTENTION FOR CLARIFICATINOS.
J. BULKHEAD LOCATED AT THE FRONT OF EACH CLASSROOM AND LAB TO RECEIVE <PT-3C> FINISH.
K. ALL FIXTURES, TERMINALS, AND OTHER DEVICES SHALL BE MOUNTED IN A MANNER THAT WILL NOT COMPROMISE CEILING PERFORMANCE IN ACCORDANCE WITH SECTION 13.5.6.2.2 ITEM 5 OF ASCE 7 AS AMENDED BY CBC SECTION 1616A.1.20 (1616.10.16) AND ASTM E580 SECTIONS 5.3 AND 5.4.
L. CEILING PANELS SHALL NOT SUPPORT ANY LIGHT FIXTURES, AIR TERMINALS OR DEVICES.
M. PENETRATIONS THROUGH THE CEILING FOR SPRINKLER HEADS AND OTHER SIMILAR DEVICES THAT ARE NOT INTEGRALLY TIED TO THE CEILING SYSTEM IN THE LATERAL DIRECTION SHALL HAVE A TWO (2) INCH OVERSIZED RING, SLEEVE OR ADAPTERTHROUGH THE CEILING TILE TO ALLOW FREE MOVEMENT OF ONE (1) INCH IN ALL HORIZONTAL DIRECTIONS. ALTERNATIVELY, PER ASTM E580, SECTION 5.2.8.5, A FLEXIBLE SPRINKLER HOSE FITTING THAT CAN ACCOMMODATE ONE (1) INCH OF CEILING MOVEMENT SHALL BE PERMITTED TO BE USED IN LIEU OF THE OVERSIZED RING, SLEEVE, OR ADAPTER.
N. SLACK SAFETY WIRES SHALL BE CONSIDERED HANGER WIRES FOR INSTALLATION AND TESTING REQUIREMENTS.
O. REF TO DETAIL 5/A673 FOR PENDANT LIGHT FIXTURE MOUNTING AND ANCHORAGE DETAILS.

hga.
1918 Main Street, Third Floor
Santa Monica, California 90405
Telephone 310.557.7600

STRUCTURAL ENGINEER
SAIFUL BOUQUET
155 N LAKE AVE
PASADENA, CA 91101
626-304-2616

MECHANICAL & PLUMBING ENGINEER
STANTEC CONSULTING INC
14130 RIVERSIDE DR. # 201
SHERMAN OAKS, CA 91423
818-377-8220

ELECTRICAL ENGINEER
FBA ENGINEERING
150 PAULARINO AVE. #A120
COSTA MESA, CA 92626
949-852-9995

CIVIL ENGINEER
KPFF CONSULTING ENGINEERS
700 SOUTH FLOWER ST. #2100
LOS ANGELES, CA 90017
213-418-0201

LANDSCAPE ARCHITECT
LYNN CAPOUYA, INC.
17992 MITCHELL SOUTH, #110
IRVINE, CA 92614
949-756-0150

LABORATORY CONSULTANT
RESEARCH FACILITIES DESIGN
3965 FIFTH AVE. #400
SAN DIEGO, CA 92103
619-297-0159

SCIENCE CENTER
SANTA ANA COLLEGE

RANCHO SANTIAGO COMMUNITY COLLEGE DISTRICT

1530 W. 17TH ST.
SANTA ANA, CA 92706

SANTA ANA COLLEGE

I HEREBY CERTIFY THAT THIS PLAN, SPECIFICATION OR REPORT WAS PREPARED BY ME OR UNDER MY DIRECT SUPERVISION AND THAT I AM A DULY LICENSED ARCHITECT UNDER THE LAWS OF THE STATE OF CA.

NAME: JAMES G. MATSON
DATE: MAY 16, 2017
REGISTRATION NUMBER: C13036

NO	DESCRIPTION	DATE
1	Addendum 1	8/23/17
2	Addendum 2	9/1/17

ISSUANCE HISTORY - THIS SHEET
DRAWN BY: SK | REVIEW BY: Approver

HGA NO: 3584-001-00

FIRST LEVEL REFLECTED CEILING PLAN

DATE: JULY 06, 2017

A301

ADDENDA PACKAGE

© COPYRIGHT HAMMEL, GREEN AND ABRAHAMSON, INC.

C:\Users\sbailey\Documents\Revit Local Files\A16-3584-001-03_SAC_SC_bailey5.rvt
9/1/2017 2:49:04 PM
SK

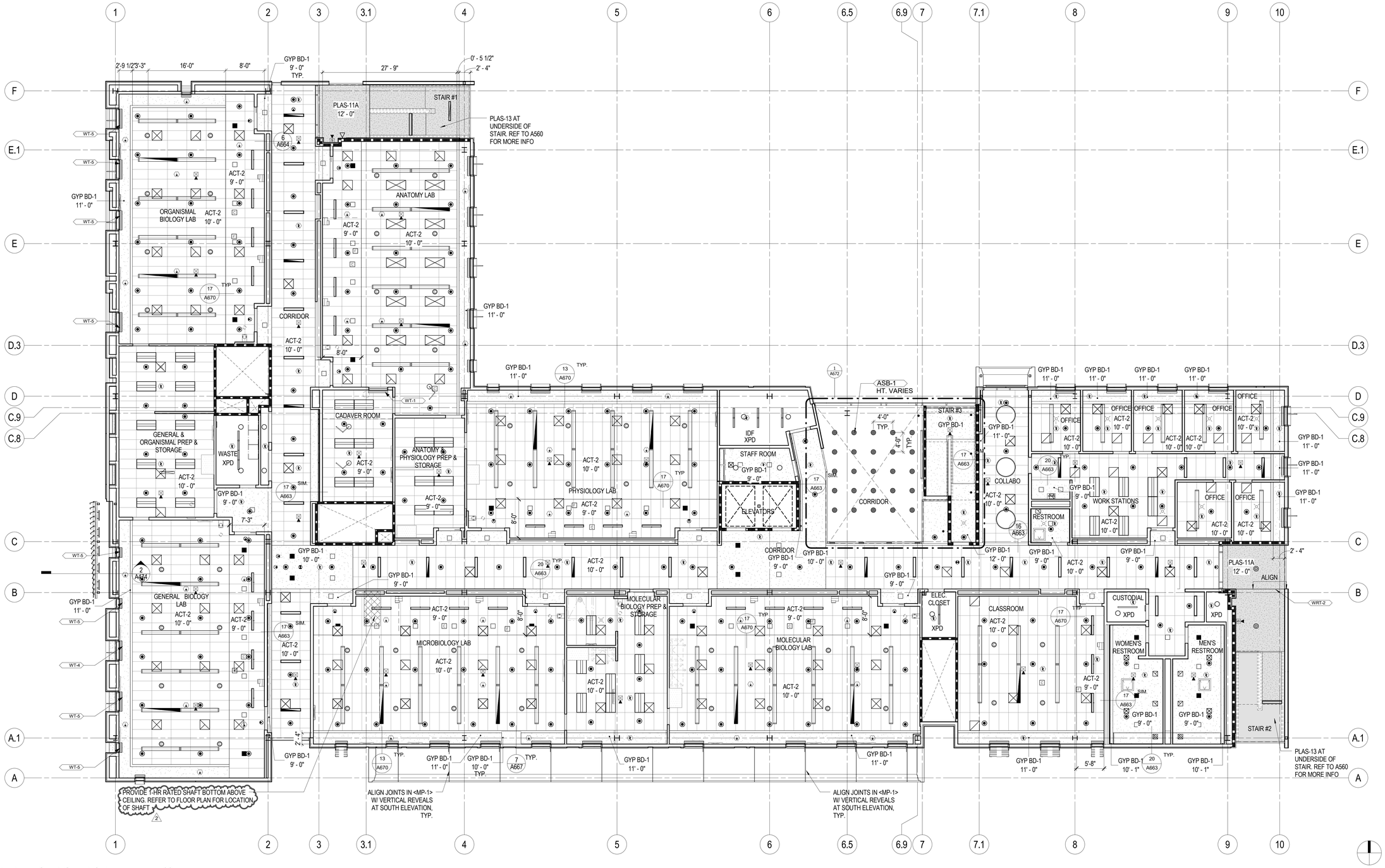

1 REFLECTED CEILING PLAN - LEVEL 02
1/8" = 1'-0"

REFLECTED CEILING PLAN LEGEND

- PLASTER SOFFIT PER 21/A663 (PLAS-11A) (PLAS-11B) OR (PLAS-13) (WRT-2)
- FRAMED GYPSUM BOARD CEILING (GYP BD-1) PER 8/A663
- SUSPENDED 2'x4' ACOUSTICAL PANEL CEILING (ACT-2) PER 1/A670
- SUSPENDED 4'x4' ACOUSTICAL CLOUDS (ACT-3) PER 5/A671
- SUSPENDED METAL BAFFLES (ACT-4) PER 6/A671
- SUSPENDED WOOD CEILING (ACT-5) PER 1/A671
- XPD — NO CEILING / EXPOSED TO STRUCTURE
- OPEN
- FOR BOTTOM OF 1-HOUR RATED SHAFT ENCLOSURE, SEE 7/A661

- SUSPENDED 6" ACOUSTICAL BAFFLES, VARYING LENGTHS (ASB-1)
- A2, A3 — PENDENT LIGHTING FIXTURE, SIZES VARY, SEE ELECTRICAL DWGS FOR MORE INFO.
- C1 — 2' x 4' RECESSED LIGHTING FIXTURE
- CL1, CL2 — COVE LIGHT, SIZES VARY
- D1 — 6" RECESSED DOWNLIGHT
- DL1 — CYLINDER DOWNLIGHT
- E1 — CEILING-MOUNTED STRIP LIGHT
- F1 — COVE LIGHTING FIXTURE
- G1 — 4.5" x 4.5" RECESSED DOWNLIGHT
- J1, J2 / JL1 — LONG WALL-MOUNTED LIGHTING FIXTURE, SIZES VARY, SEE ELECTRICAL DWGS FOR MORE INFO. LINEAR WALL-MOUNTED LIGHTING FIXTURE
- K1 — WALL-MOUNTED LIGHTING FIXTURE
- L1 — RECESSED EXTERIOR DOWNLIGHT
- M1 — 48" LONG WALL-MOUNTED LIGHTING FIXTURE
- N1 — 12'-0" RECESSED LINEAR LIGHTING FIXTURE
- PL1 — 48" DIAMETER PENDANT LIGHTING FIXTURE
- PL2 — 6" DIAMETER CYLINDER
- Q1 — 16" DIAMETER PENDANT LIGHTING FIXTURE
- S1 — EXTERIOR WALL WASH LIGHTING FIXTURE
- SL1 — CAMPUS WALKWAY LIGHTING FIXTURE
- SL3 — LIGHTING POLE
- SL4 — TREE UPLIGHTS
- SL5 — LIGHT STRIP-FLEXIBLE
- SL6 — CAMPUS PARKING LOT LIGHT FIXTURE- TWIN HEAD
- W1 — CEILING-MOUNTED STRIP LIGHT
- UNDER CABINET LIGHTING
- X1 — CEILING-MOUNTED EXIT SIGN
- X2 — PENDANT EXIT SIGN
- CEILING-MOUNTED HEAT DETECTOR
- CEILING-MOUNTED SMOKE DETECTOR
- ELECTRONIC VISUAL AND SPEAKER DEVICE
- FIRE ALARM HORN
- UPRIGHT SPRINKLER HEAD
- PENDENT SPRINKLER HEAD
- SIDEWALL SPRINKLER HEAD
- CEILING REGISTER/GRILLE FACE
- ACCESS PANEL

- WALL-MOUNTED ULTRA-SHORT THROW PROJECTOR. FOR ANCHORAGE, REF TO 1/AV701
- CEILING RECESSED / PENDANT LOUDSPEAKER
- CEILING-MOUNTED VIDEO PROJECTOR, REF TO DETAIL 1/AV702. FOR ANCHORAGE DETAIL, REF TO 10/S7.20.
- CEILING-MOUNTED PROJECTOR SCREEN, REF TO DETAIL 1/AV702. FOR ANCHORAGE, REF TO DETAIL 5/S7.20.
- PIPE DROP, REFER TO LAB DWGS FOR MORE INFO
- EYE WASH AND SAFETY SHOWER, REFER TO LAB DWGS FOR MORE INFO
- SNORKEL, REFER TO LAB DWGS FOR MORE INFO. FOR ANCHORAGE, REF 8/S7.20
- EXAM LIGHT, REFER TO LAB DWGS FOR MORE INFO. FOR ANCHORAGE, REF 8/S7.20
- FUME HOOD, REFER TO LAB DWGS FOR MORE INFO.

GENERAL NOTES - CEILING PLAN

A. SEE MECHANICAL AND ELECTRICAL DWGS FOR DEVICE AND FIXTURE TYPES, SIZES, QUANTITY, INSTALLATION & SPECIFICATIONS. DEVICES SHOWN ON THE ARCH PLANS & NOT ON ENGINEERING PLANS SHOULD BE BROUGHT TO ARCHITECT'S ATTENTION FOR CLARIFICATIONS.
B. ACT TILES SHALL BE CENTERED WITHIN ROOM(S) U.N.O. FULL CEILING TILE TO BE ALIGNED TO OTHER CEILING TYPES WITHIN THE ROOMS AS INDICATED ON PLANS.
C. CENTER RECESSED LIGHTS, ELECTRICAL, MECHANICAL DEVICES AND SPRINKLER HEADS WHEN SHOWN IN CEILING TILES. WHERE RECESSED LIGHTS ARE SHOWN OFF-CENTER IN 2X4 SCORED CEILING TILE, CENTER THE FIXTURE WITHIN THE 2X2 PORTION OF THE TILE.
D. PROVIDE ACCESS PANEL(S) AS REQUIRED. REVIEW LOCATION OF ACCESS PANEL(S) NOT SHOWN ON THE DRAWINGS WITH ARCHITECT PRIOR TO INSTALLATION.
E. CEILING FINISHES ADJACENT TO OR WITHIN THE LIMITS OF CONSTRUCTION DISTURBED OR DAMAGED BY CONSTRUCTION SHALL BE PATCHED TO MATCH EXISTING ADJACENT CEILING FINISH.
F. ALL <GYP-BD 1> CEILING TO BE PAINTED <PT-1C>. CEILING AT RESTROOMS TO BE PAINTED <PT-1B>.
G. ALL EXTERIOR WINDOWS TO HAVE SINGLE SHADE <WT-3> U.N.O. REFER TO SHEET A441 FOR MANUAL AND AUTOMATIC SHADES DTLS.
H. ACT TILE TO FRAME AROUND FUME HOODS WHERE OCCURS.
I. SHIFT FIXTURES/CEILING-MOUNTED EQUIPMENT IN THE CEILING OUT OF THE WAY WHERE IT INTERFERE WITH JOINTS IN THE CANOPY AND GYP CEILING. BRING TO THE ARCHITECT'S ATTENTION FOR CLARIFICATINOS.
J. BULKHEAD LOCATED AT THE FRONT OF EACH CLASSROOM AND LAB TO RECEIVE <PT-3C> FINISH.
K. ALL FIXTURES, TERMINALS, AND OTHER DEVICES SHALL BE MOUNTED IN A MANNER THAT WILL NOT COMPROMISE CEILING PERFORMANCE IN ACCORDANCE WITH SECTION 13.5.6.2.2 ITEM 5 OF ASCE 7 AS AMENDED BY CBC SECTION 1616A.1.20 (1616.10.16) AND ASTM E580 SECTIONS 5.3 AND 5.4.
L. CEILING PANELS SHALL NOT SUPPORT ANY LIGHT FIXTURES, AIR TERMINALS OR DEVICES.
M. PENETRATIONS THROUGH THE CEILING FOR SPRINKLER HEADS AND OTHER SIMILAR DEVICES THAT ARE NOT INTEGRALLY TIED TO THE CEILING SYSTEM IN THE LATERAL DIRECTION SHALL HAVE A TWO (2) INCH OVERSIZED RING, SLEEVE OR ADAPTERTHROUGH THE CEILING TILE TO ALLOW FREE MOVEMENT OF ONE (1) INCH IN ALL HORIZONTAL DIRECTIONS. ALTERNATIVELY, PER ASTM E580, SECTION 5.2.8.5, A FLEXIBLE SPRINKLER HOSE FITTING THAT CAN ACCOMMODATE ONE (1) INCH OF CEILING MOVEMENT SHALL BE PERMITTED TO BE USED IN LIEU OF THE OVERSIZED RING, SLEEVE, OR ADAPTER.
N. SLACK SAFETY WIRES SHALL BE CONSIDERED HANGER WIRES FOR INSTALLATION AND TESTING REQUIREMENTS.
O. REF TO DETAIL 5/A673 FOR PENDANT LIGHT FIXTURE MOUNTING AND ANCHORAGE DETAILS.

hga.
1918 Main Street, Third Floor
Santa Monica, California 90405
Telephone 310.557.7600

STRUCTURAL ENGINEER
SAIFUL BOUQUET
155 N LAKE AVE
PASADENA, CA 91101
626-304-2616

MECHANICAL & PLUMBING ENGINEER
STANTEC CONSULTING INC
14130 RIVERSIDE DR. # 201
SHERMAN OAKS, CA 91423
818-377-8220

ELECTRICAL ENGINEER
FBA ENGINEERING
150 PAULARINO AVE. #A120
COSTA MESA, CA 92626
949-852-9995

CIVIL ENGINEER
KPFF CONSULTING ENGINEERS
700 SOUTH FLOWER ST. #2100
LOS ANGELES, CA 90017
213-418-0201

LANDSCAPE ARCHITECT
LYNN CAPOUYA, INC.
17992 MITCHELL SOUTH, #110
IRVINE, CA 92614
949-756-0150

LABORATORY CONSULTANT
RESEARCH FACILITIES DESIGN
3965 FIFTH AVE. #400
SAN DIEGO, CA 92103
619-297-0159

SCIENCE CENTER
SANTA ANA COLLEGE
RANCHO SANTIAGO COMMUNITY COLLEGE DISTRICT
1530 W. 17TH ST.
SANTA ANA, CA 92706

SANTA ANA COLLEGE

I HEREBY CERTIFY THAT THIS PLAN, SPECIFICATION OR REPORT WAS PREPARED BY ME OR UNDER MY DIRECT SUPERVISION AND THAT I AM A DULY LICENSED ARCHITECT UNDER THE LAWS OF THE STATE OF CA.

JAMES G. MATSON — LICENSED ARCHITECT — No. C13036 — EXPIRATION: SEPTEMBER 30, 2019 — RENEWAL DUE — STATE OF CALIFORNIA

NAME: JAMES G. MATSON
DATE: MAY 16, 2017
REGISTRATION NUMBER: C13036

NO	DESCRIPTION	DATE
2	Addendum 2	9/1/17

ISSUANCE HISTORY - THIS SHEET
DRAWN BY: SK | REVIEW BY: Approver

HGA NO: 3584-001-00

SECOND LEVEL REFLECTED CEILING PLAN

DATE: JULY 06, 2017

A302

ADDENDA PACKAGE

© COPYRIGHT HAMMEL, GREEN AND ABRAHAMSON, INC.

C:\Users\sktatsuo\Documents\Revit Local Files\16-3584-001-09_SAC-SC_tatsuo.rvt
9/1/2017 2:59:14 PM
SK

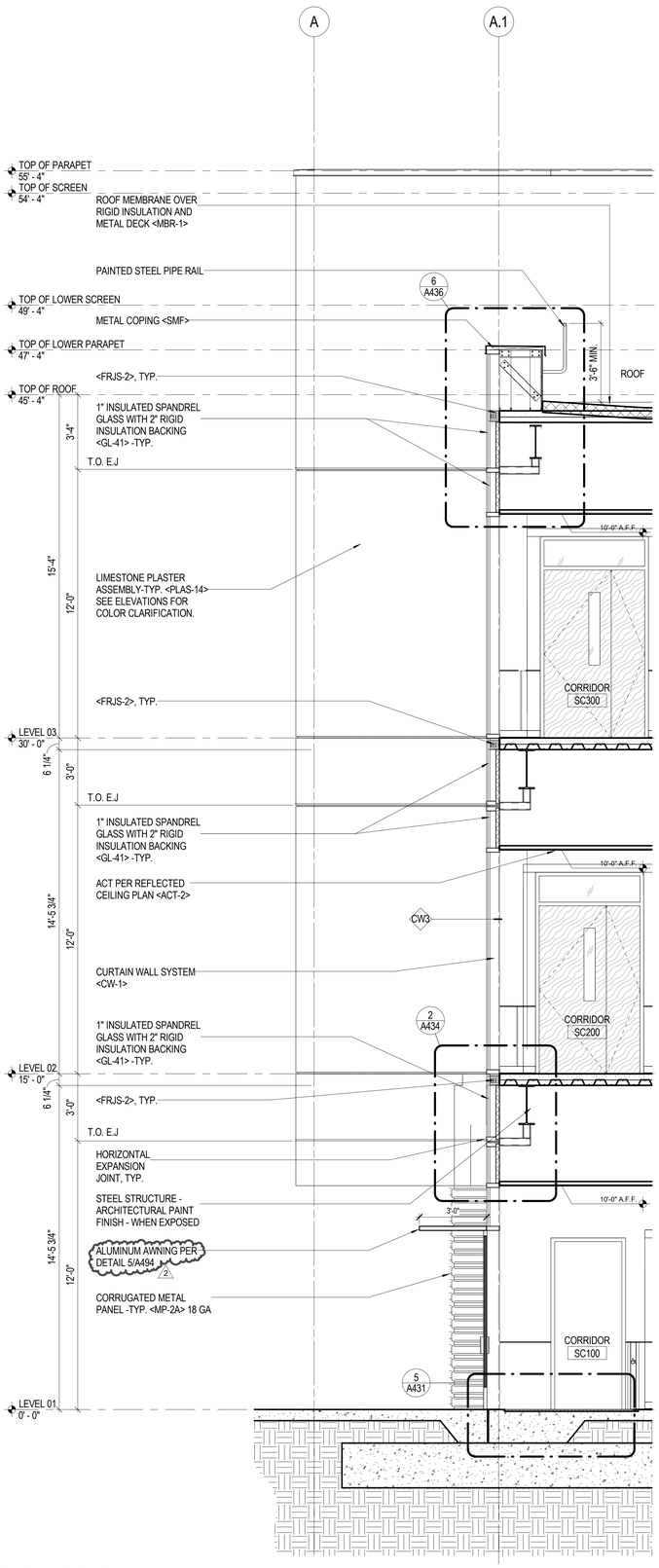

3 WALL SECTION
3/8" = 1'-0"

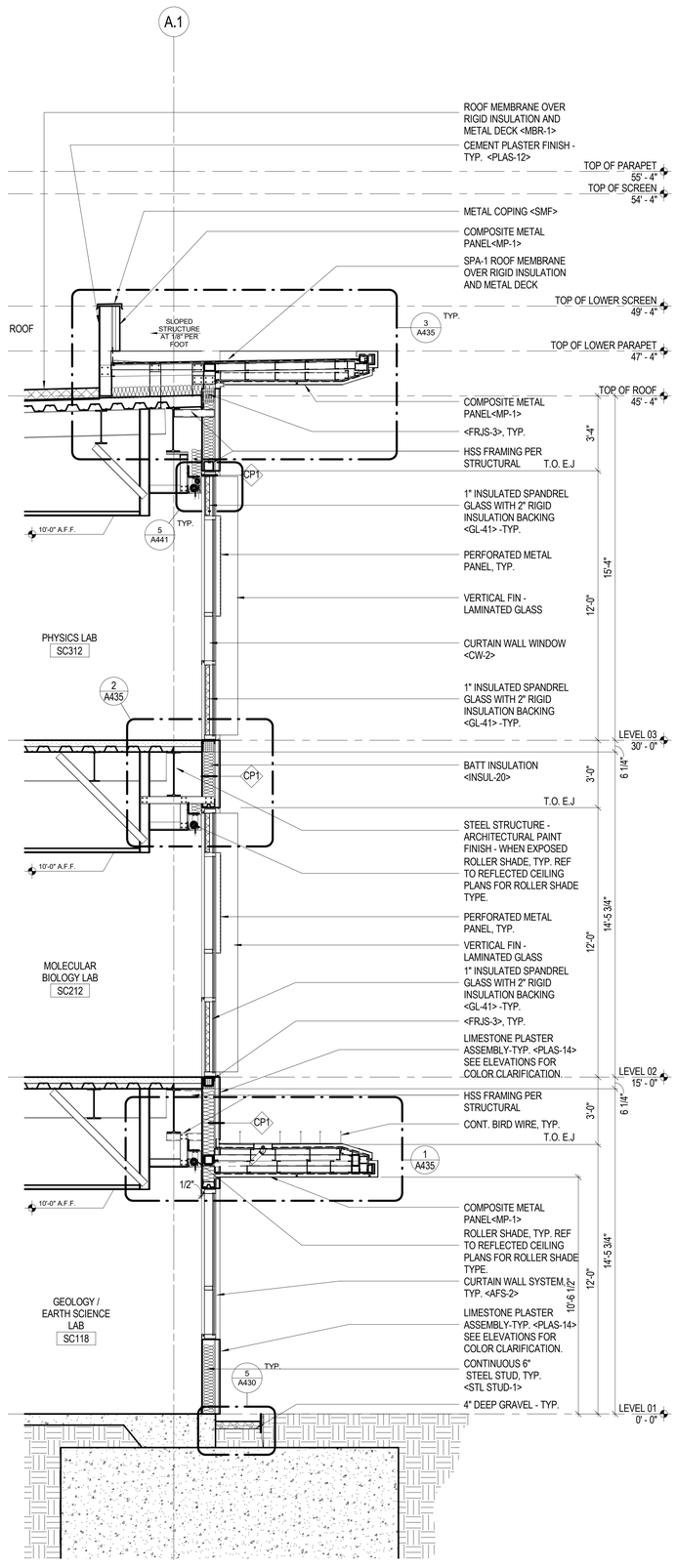

2 WALL SECTION
3/8" = 1'-0"

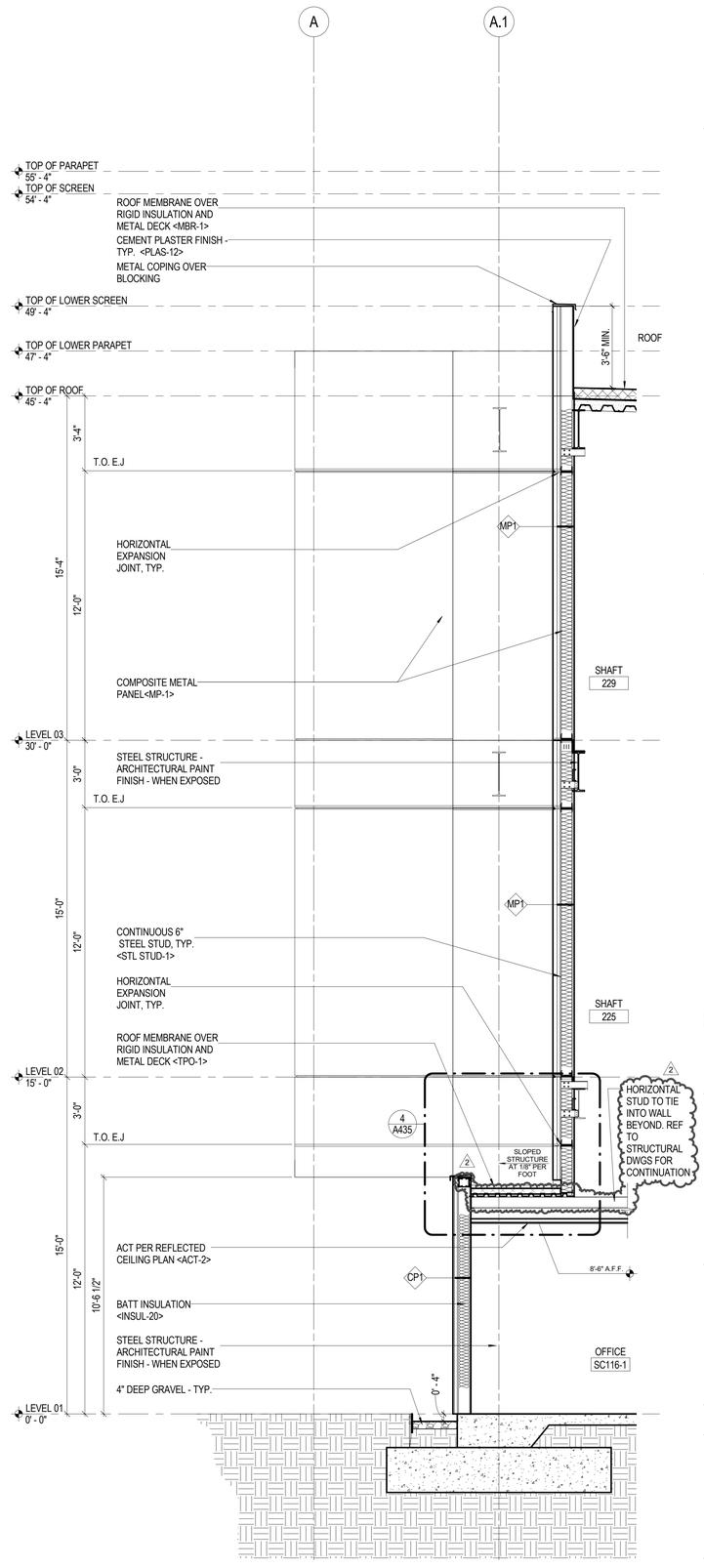

1 WALL SECTION
3/8" = 1'-0"

hga.
1918 Main Street, Third Floor
Santa Monica, California 90405
Telephone 310.557.7600

STRUCTURAL ENGINEER
SAIFUL BOUQUET
155 N LAKE AVE
PASADENA, CA 91101
626-304-2616

MECHANICAL & PLUMBING ENGINEER
STANTEC CONSULTING INC
14130 RIVERSIDE DR. # 201
SHERMAN OAKS, CA 91423
818-377-8220

ELECTRICAL ENGINEER
FBA ENGINEERING
150 PAULARINO AVE. #A120
COSTA MESA, CA 92626
949-852-9995

CIVIL ENGINEER
KPFF CONSULTING ENGINEERS
700 SOUTH FLOWER ST. #2100
LOS ANGELES, CA 90017
213-418-0201

LANDSCAPE ARCHITECT
LYNN CAPOUYA, INC.
17992 MITCHELL SOUTH, #110
IRVINE, CA 92614
949-756-0150

LABORATORY CONSULTANT
RESEARCH FACILITIES DESIGN
3965 FIFTH AVE. #400
SAN DIEGO, CA 92103
619-297-0159

SCIENCE CENTER
SANTA ANA COLLEGE

RANCHO SANTIAGO COMMUNITY COLLEGE DISTRICT

1530 W. 17TH ST.
SANTA ANA, CA 92706

SANTA ANA COLLEGE

I HEREBY CERTIFY THAT THIS PLAN, SPECIFICATION OR REPORT WAS PREPARED BY ME OR UNDER MY DIRECT SUPERVISION AND THAT I AM A DULY LICENSED ARCHITECT UNDER THE LAWS OF THE STATE OF CA.

LICENSED ARCHITECT JAMES G. MATSON No. C13036 REGISTERED PROFESSIONAL ENGINEER

SEPTEMBER 30, 2019
RENEWAL DATE

NAME: JAMES G. MATSON
DATE: MAY 16, 2017
REGISTRATION NUMBER: C13036

NO	DESCRIPTION	DATE
2	Addendum 2	9/1/17

ISSUANCE HISTORY - THIS SHEET

DRAWN BY: RE | REVIEW BY: TE

HGA NO: 3584-001-00

WALL SECTIONS

DATE: JULY 06, 2017

A424

ADDENDA PACKAGE

© COPYRIGHT HAMMEL, GREEN AND ABRAHAMSON, INC.

9/1/2017 2:59:22 PM C:\Users\rlastas\AppData\Local\Temp\AcPublish_9440\3584-001-00_SAC SC_rlastas.rvt RE

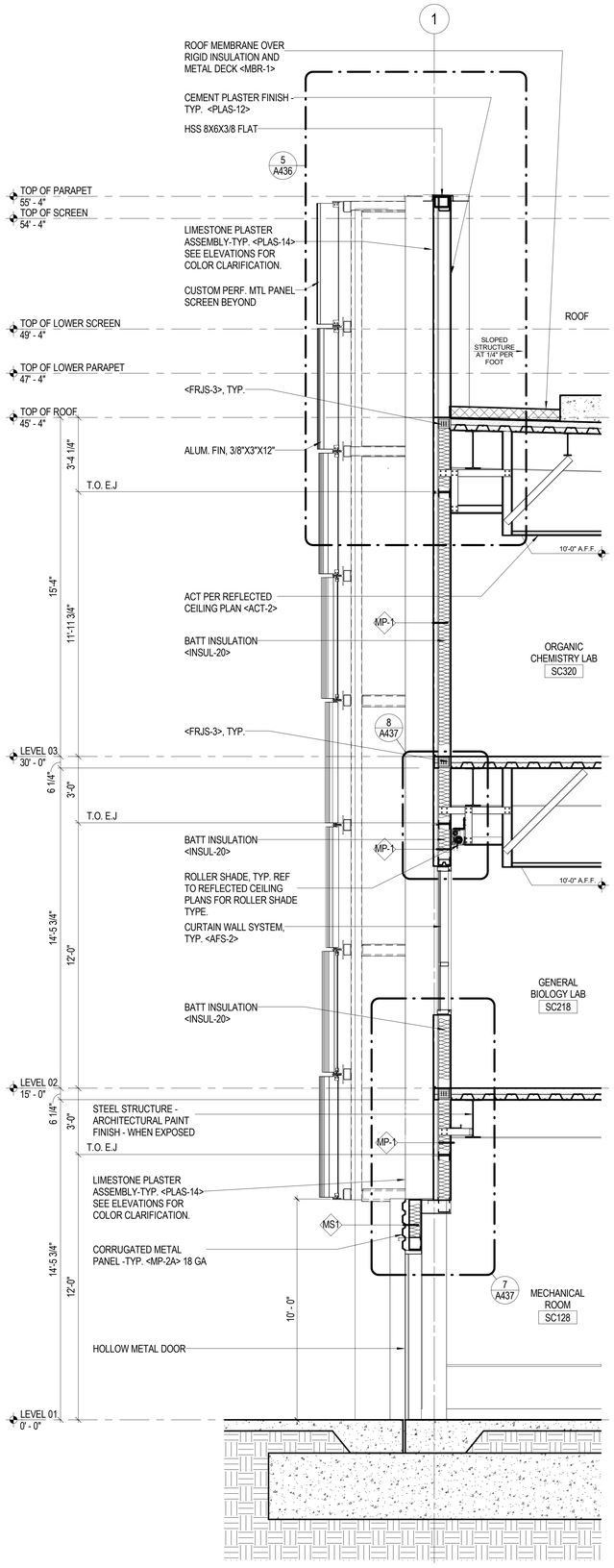

3 WALL SECTION
3/8" = 1'-0"

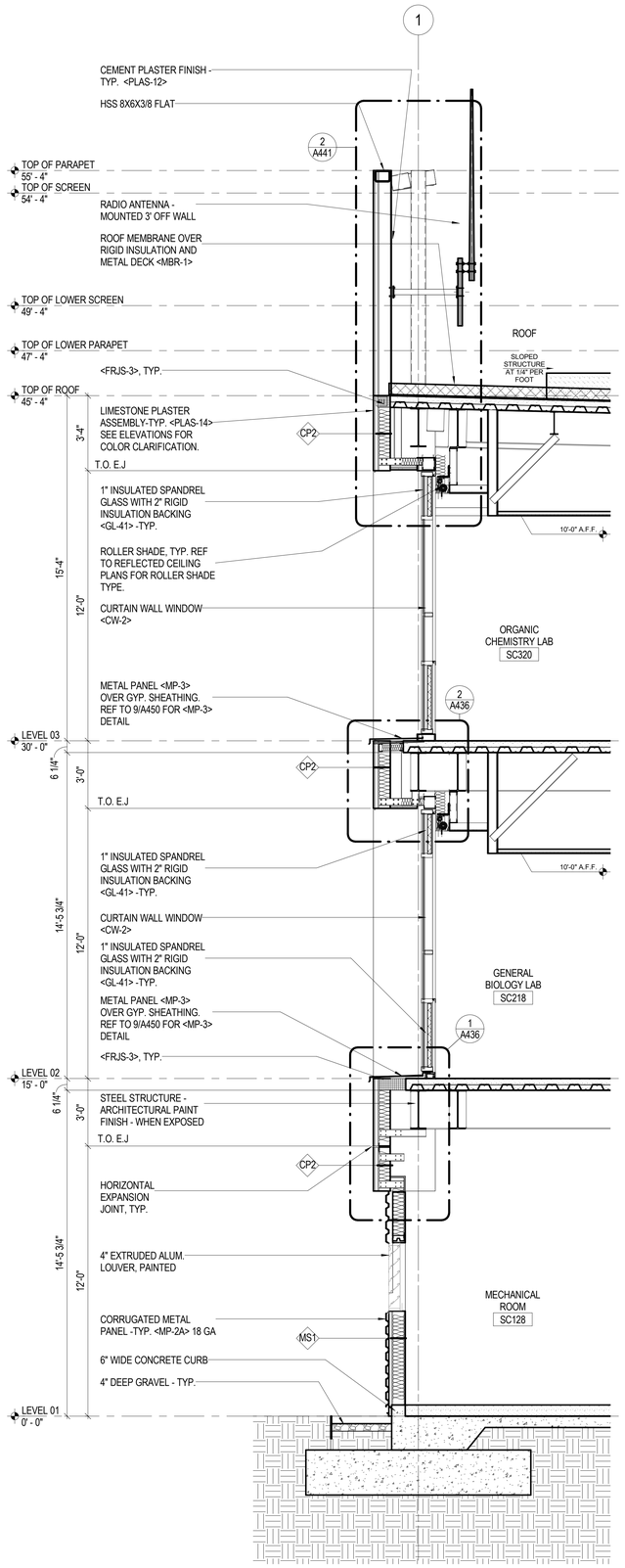

2 WALL SECTION
3/8" = 1'-0"

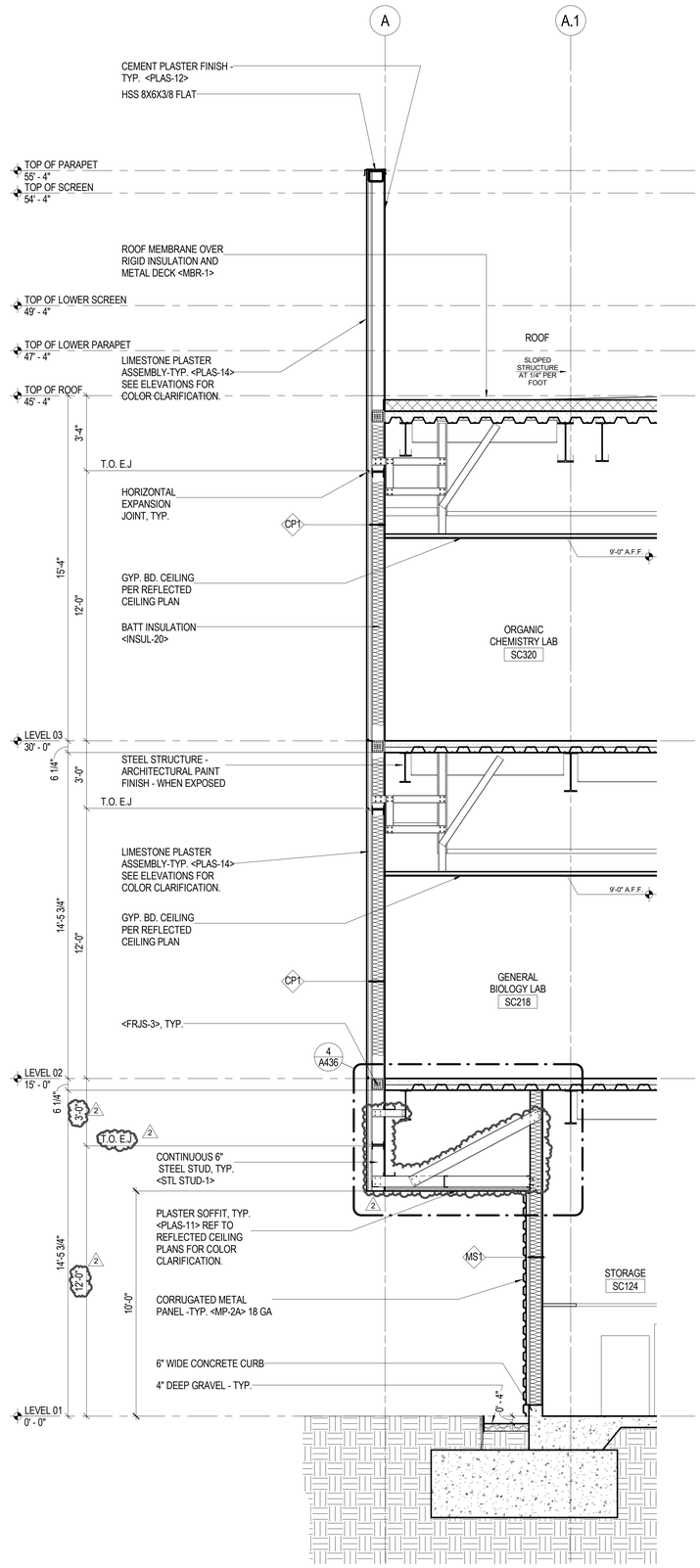

1 WALL SECTION
3/8" = 1'-0"

hGA.
1918 Main Street, Third Floor
Santa Monica , California 90405
Telephone 310.557.7600

STRUCTURAL ENGINEER
SAIFUL BOUQUET
155 N LAKE AVE
PASADENA, CA 91101
626-304-2616

MECHANICAL & PLUMBING ENGINEER
STANTEC CONSULTING INC
14130 RIVERSIDE DR. # 201
SHERMAN OAKS, CA 91423
818-377-8220

ELECTRICAL ENGINEER
FBA ENGINEERING
150 PAULARINO AVE. #A120
COSTA MESA, CA 92626
949-852-9995

CIVIL ENGINEER
KPFF CONSULTING ENGINEERS
700 SOUTH FLOWER ST. #2100
LOS ANGELES, CA 90017
213-418-0201

LANDSCAPE ARCHITECT
LYNN CAPOUYA, INC.
17992 MITCHELL SOUTH, #110
IRVINE, CA 92614
949-756-0150

LABORATORY CONSULTANT
RESEARCH FACILITIES DESIGN
3965 FIFTH AVE. #400
SAN DIEGO, CA 92103
619-297-0159

SCIENCE CENTER
SANTA ANA COLLEGE

RANCHO SANTIAGO COMMUNITY COLLEGE DISTRICT

1530 W. 17TH ST.
SANTA ANA, CA 92706

SANTA ANA COLLEGE

I HEREBY CERTIFY THAT THIS PLAN, SPECIFICATION OR REPORT WAS PREPARED BY ME OR UNDER MY DIRECT SUPERVISION AND THAT I AM A DULY LICENSED ARCHITECT UNDER THE LAWS OF THE STATE OF CA.

NAME: JAMES G. MATSON
DATE: MAY 15, 2017
REGISTRATION NUMBER: C13036

NO	DESCRIPTION	DATE
2	Addendum 2	9/1/17

ISSUANCE HISTORY - THIS SHEET

DRAWN BY: RE | REVIEW BY: TE

HGA NO: 3584-001-00

WALL SECTIONS

DATE: JULY 06, 2017

A425

ADDENDA PACKAGE

© COPYRIGHT HAMMEL, GREEN AND ABRAHAMSON, INC.

RE
9/1/2017 2:59:36 PM
C:\Users\tstacy\ADocuments\Revit Local Files\A16-3584-001-05_SAC-SC_tstacy.rvt

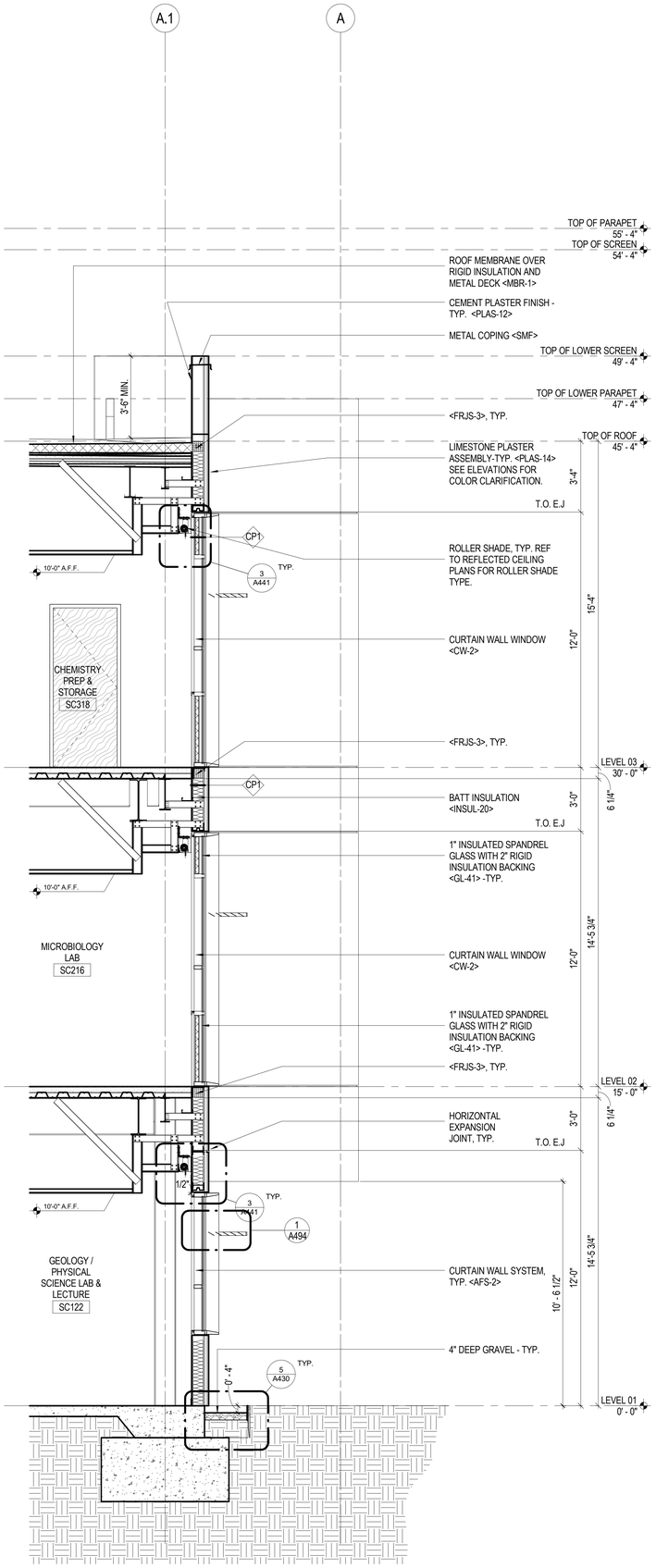

3 WALL SECTION
3/8" = 1'-0"

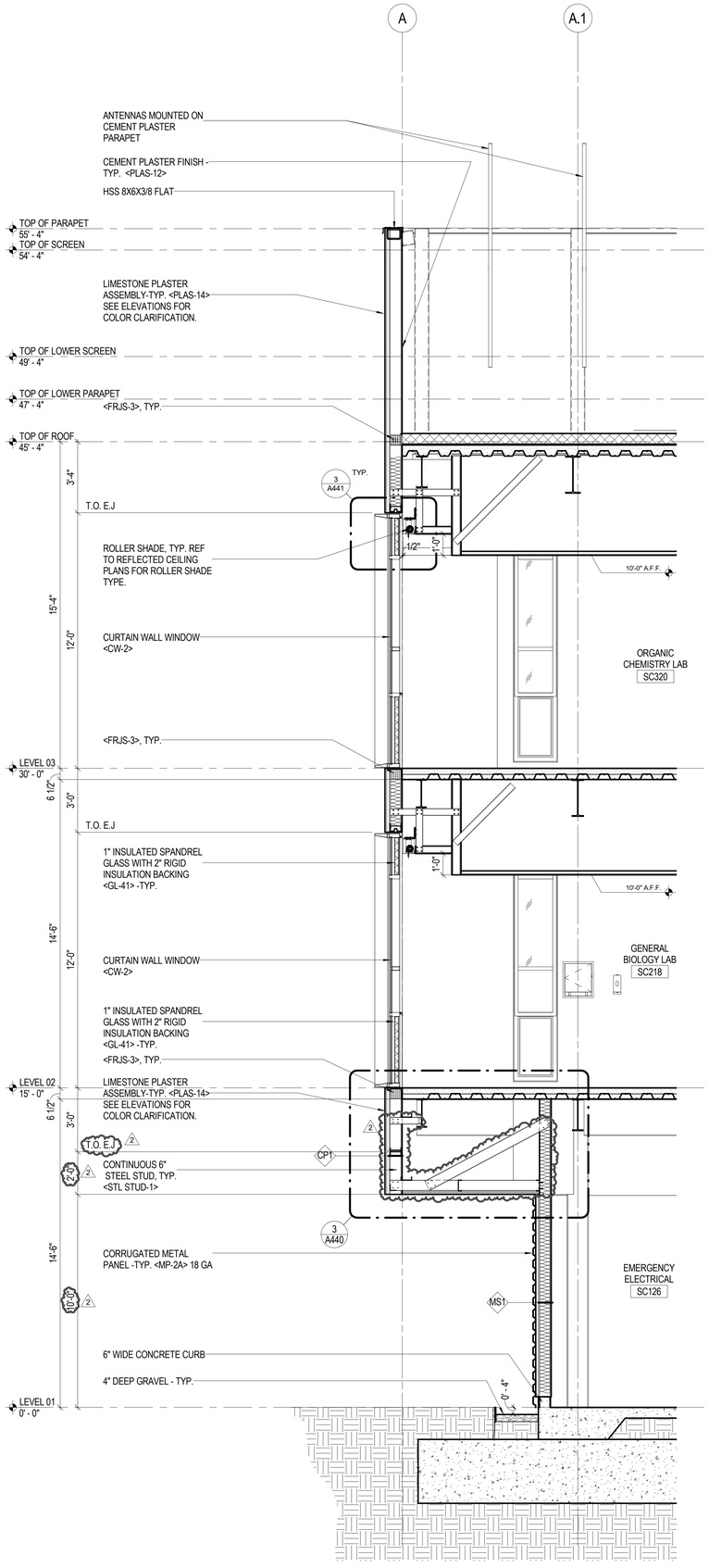

2 WALL SECTION
3/8" = 1'-0"

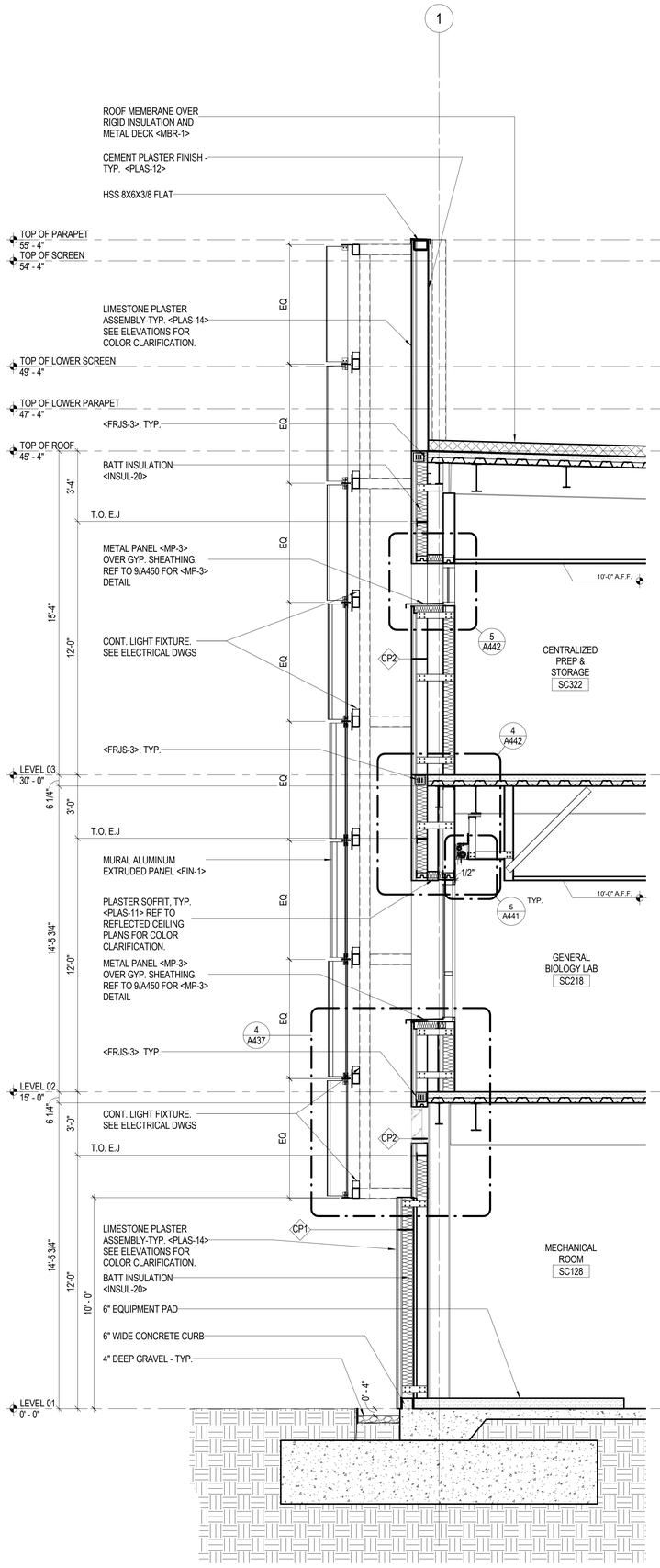

1 WALL SECTION (AT MURAL)
3/8" = 1'-0"

1918 Main Street, Third Floor
Santa Monica, California 90405
Telephone 310.557.7600

STRUCTURAL ENGINEER
SAIFUL BOUQUET
155 N LAKE AVE
PASADENA, CA 91101
626-304-2616

MECHANICAL & PLUMBING ENGINEER
STANTEC CONSULTING INC
14130 RIVERSIDE DR. # 201
SHERMAN OAKS, CA 91423
818-377-8220

ELECTRICAL ENGINEER
FBA ENGINEERING
150 PAULARINO AVE. #A120
COSTA MESA, CA 92626
949-852-9995

CIVIL ENGINEER
KPFF CONSULTING ENGINEERS
700 SOUTH FLOWER ST. #2100
LOS ANGELES, CA 90017
213-418-0201

LANDSCAPE ARCHITECT
LYNN CAPOUYA, INC.
17992 MITCHELL SOUTH, #110
IRVINE, CA 92614
949-756-0150

LABORATORY CONSULTANT
RESEARCH FACILITIES DESIGN
3965 FIFTH AVE. #400
SAN DIEGO, CA 92103
619-297-0159

SCIENCE CENTER
SANTA ANA COLLEGE

RANCHO SANTIAGO COMMUNITY COLLEGE DISTRICT

1530 W. 17TH ST.
SANTA ANA, CA 92706

SANTA ANA COLLEGE

I HEREBY CERTIFY THAT THIS PLAN, SPECIFICATION OR REPORT WAS PREPARED BY ME OR UNDER MY DIRECT SUPERVISION AND THAT I AM A DULY LICENSED ARCHITECT UNDER THE LAWS OF THE STATE OF CA.

JAMES G. MATSON
No. C13036
REGISTERED ARCHITECT
STATE OF CALIFORNIA

NAME: JAMES G. MATSON
DATE: MAY 15, 2017
REGISTRATION NUMBER: C13036

NO	DESCRIPTION	DATE
2	Addendum 2	9/1/17

ISSUANCE HISTORY - THIS SHEET

DRAWN BY: RE | REVIEW BY: TE

HGA NO: 3584-001-00

WALL SECTIONS

DATE: JULY 06, 2017

A429

ADDENDA PACKAGE

© COPYRIGHT HAMMEL, GREEN AND ABRAHAMSON, INC.

RE
9/1/2017 2:59:53 PM
C:\Users\tstacy\Documents\Revit Local Files\A16-3584-001-00_SAC-SC_tstacy.rvt

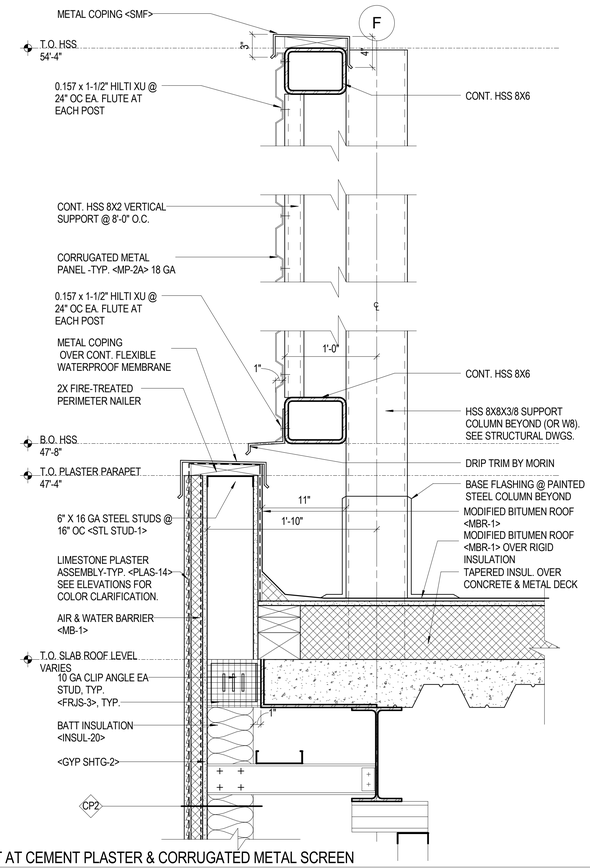

7 PARAPET AT CEMENT PLASTER & CORRUGATED METAL SCREEN
1 1/2" = 1'-0"

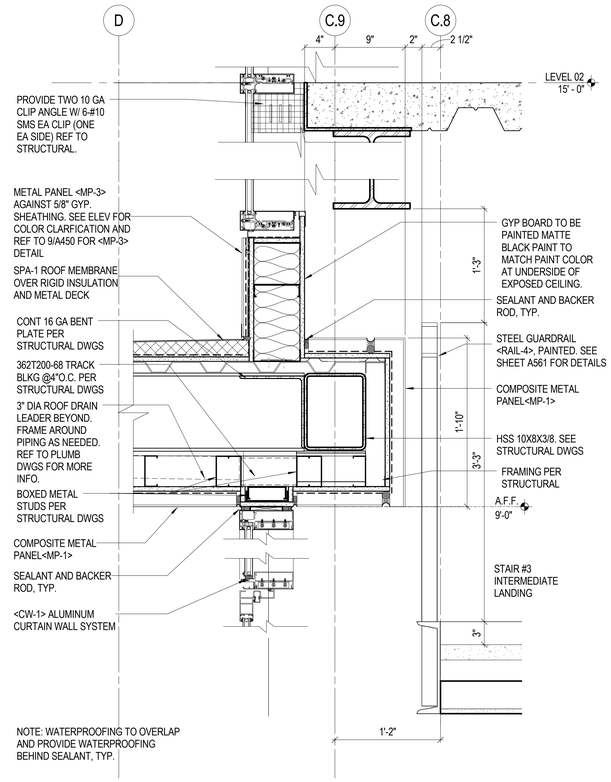

4 EXTERIOR DETAIL AT STAIR LANDING
1 1/2" = 1'-0"

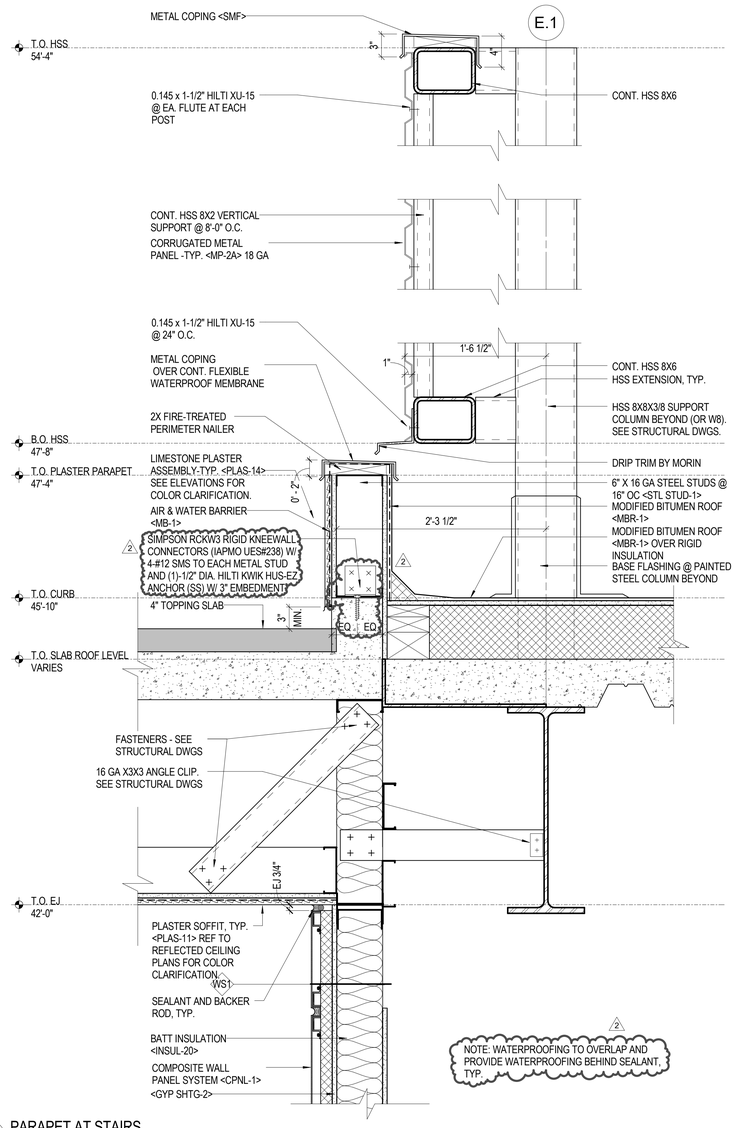

2 PARAPET AT STAIRS
1 1/2" = 1'-0"

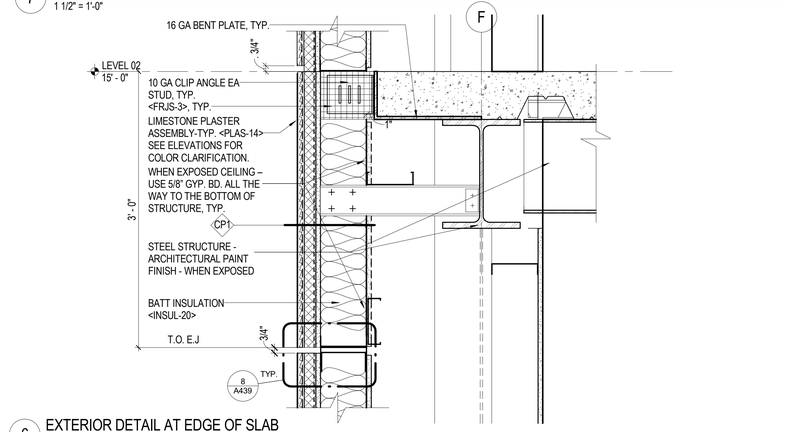

6 EXTERIOR DETAIL AT EDGE OF SLAB
1 1/2" = 1'-0"

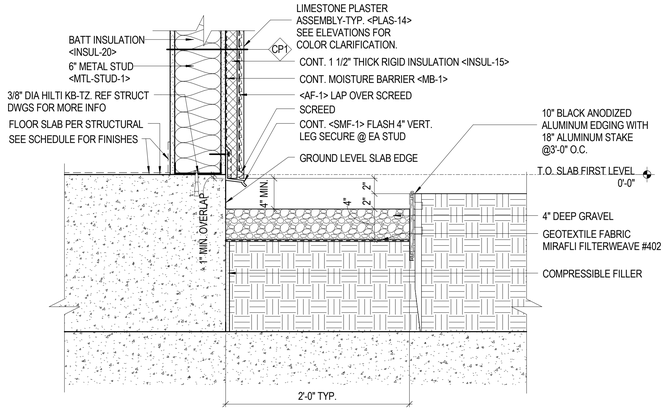

5 EXTERIOR DETAIL AT GRAVEL BED
1 1/2" = 1'-0"

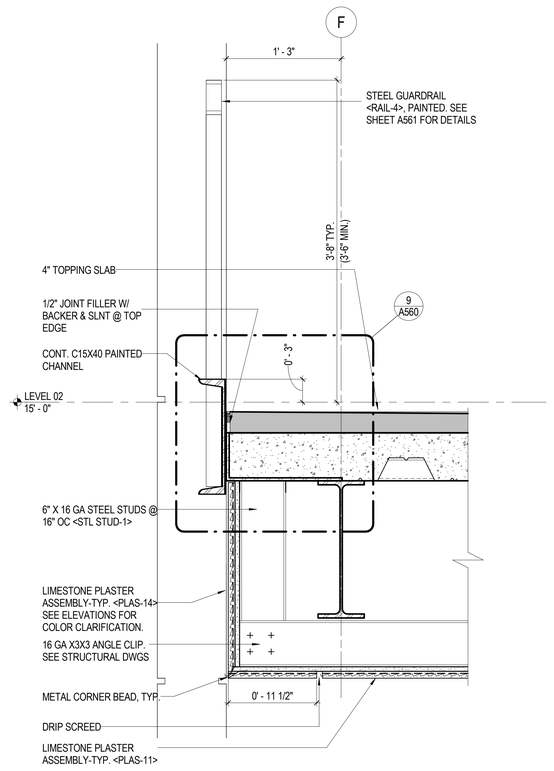

3 EXTERIOR DETAIL AT GUARDRAIL
1 1/2" = 1'-0"

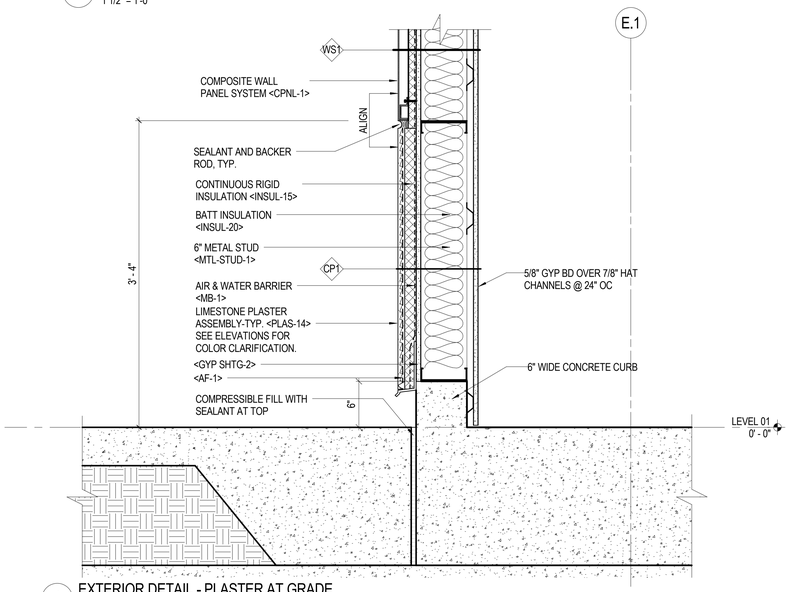

1 EXTERIOR DETAIL - PLASTER AT GRADE
1 1/2" = 1'-0"

hga.
1918 Main Street, Third Floor
Santa Monica, California 90405
Telephone 310.557.7600

STRUCTURAL ENGINEER
SAIFUL BOUQUET
155 N LAKE AVE
PASADENA, CA 91101
626-304-2616

MECHANICAL & PLUMBING ENGINEER
STANTEC CONSULTING INC
14130 RIVERSIDE DR. # 201
SHERMAN OAKS, CA 91423
818-377-8220

ELECTRICAL ENGINEER
FBA ENGINEERING
150 PAULARINO AVE. #A120
COSTA MESA, CA 92626
949-852-9995

CIVIL ENGINEER
KPFF CONSULTING ENGINEERS
700 SOUTH FLOWER ST. #2100
LOS ANGELES, CA 90017
213-418-0201

LANDSCAPE ARCHITECT
LYNN CAPOUYA, INC.
17992 MITCHELL SOUTH, #110
IRVINE, CA 92614
949-756-0150

LABORATORY CONSULTANT
RESEARCH FACILITIES DESIGN
3965 FIFTH AVE. #400
SAN DIEGO, CA 92103
619-297-0159

SCIENCE CENTER
SANTA ANA COLLEGE

RANCHO SANTIAGO COMMUNITY COLLEGE DISTRICT

1530 W. 17TH ST.
SANTA ANA, CA 92706

SANTA ANA COLLEGE

I HEREBY CERTIFY THAT THIS PLAN, SPECIFICATION OR REPORT WAS PREPARED BY ME OR UNDER MY DIRECT SUPERVISION AND THAT I AM A DULY LICENSED ARCHITECT UNDER THE LAWS OF THE STATE OF CA.

JAMES G. MATSON — LICENSED ARCHITECT — No. C13036 — REGISTERED PROFESSIONAL ENGINEER — SEPTEMBER 30, 2019 — STATE OF CALIFORNIA

NAME: JAMES G. MATSON
DATE: MAY 16, 2017
REGISTRATION NUMBER: C13036

NO	DESCRIPTION	DATE
1	Addendum 1	8/23/17
2	Addendum 2	9/1/17

ISSUANCE HISTORY - THIS SHEET

DRAWN BY: RE | REVIEW BY: TE

HGA NO: 3584-001-00

EXTERIOR SECTION DETAILS

DATE: JULY 06, 2017

A430

ADDENDA PACKAGE

© COPYRIGHT HAMMEL, GREEN AND ABRAHAMSON, INC.

9/1/2017 2:59:59 PM C:\Users\tstaso\Documents\Revit Local Files\A16-3584-001-09_SAC SC_tstaso.rvt RE

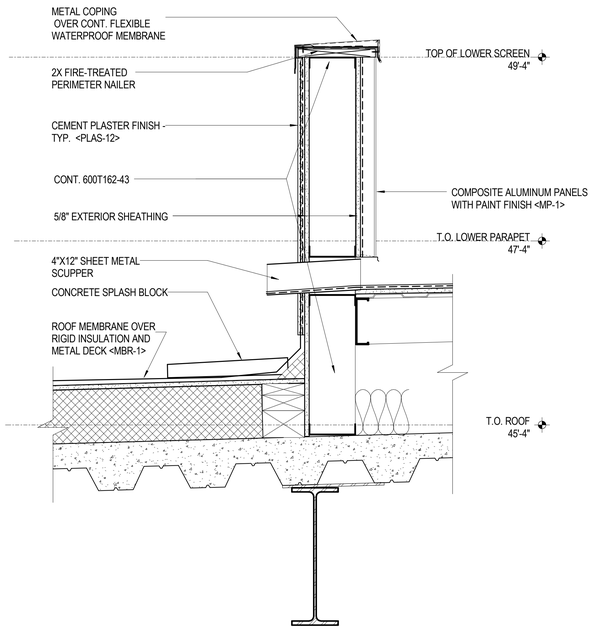

7 SOUTH CANOPY BOX ROOF SCUPPER DETAIL
1 1/2" = 1'-0"

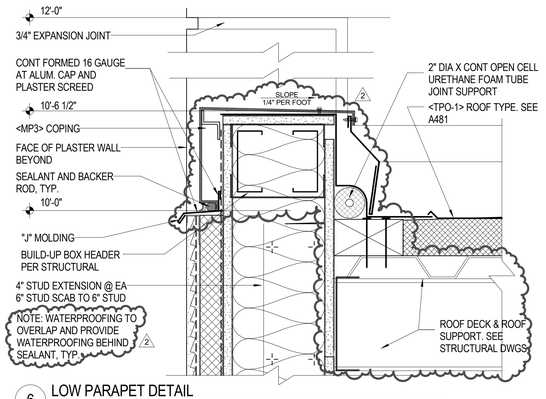

6 LOW PARAPET DETAIL
3" = 1'-0"

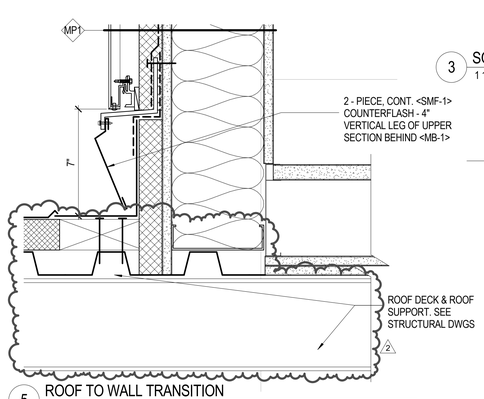

5 ROOF TO WALL TRANSITION
3" = 1'-0"

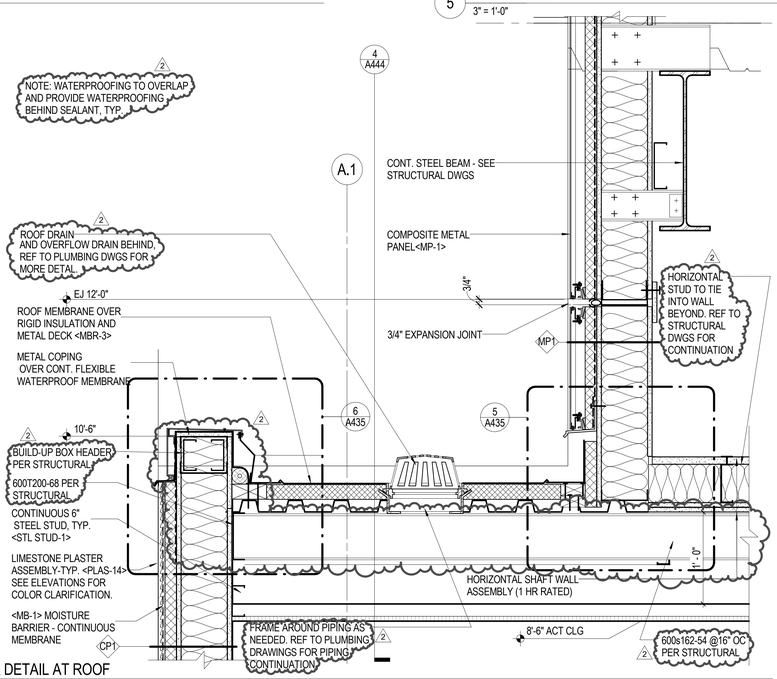

4 EXTERIOR DETAIL AT ROOF
1 1/2" = 1'-0"

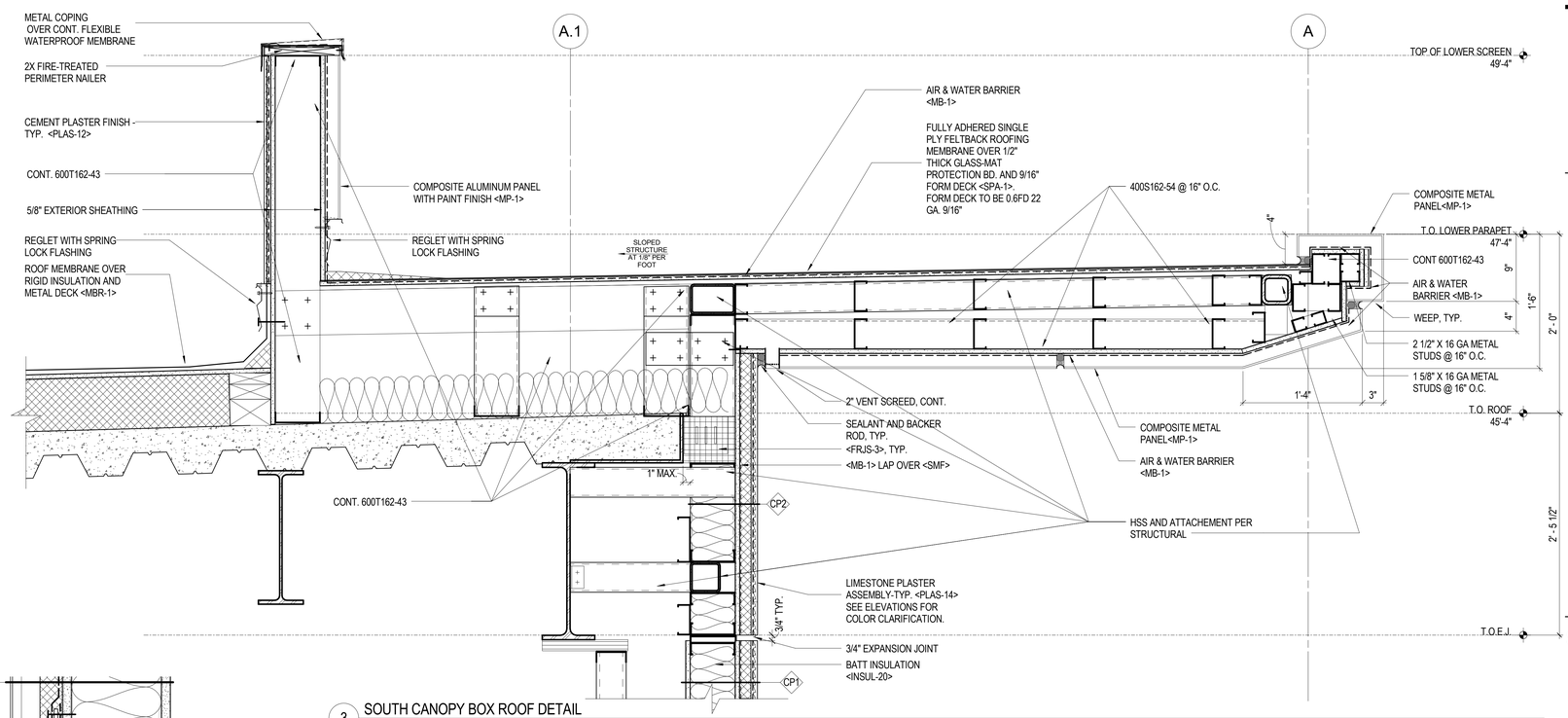

3 SOUTH CANOPY BOX ROOF DETAIL
1 1/2" = 1'-0"

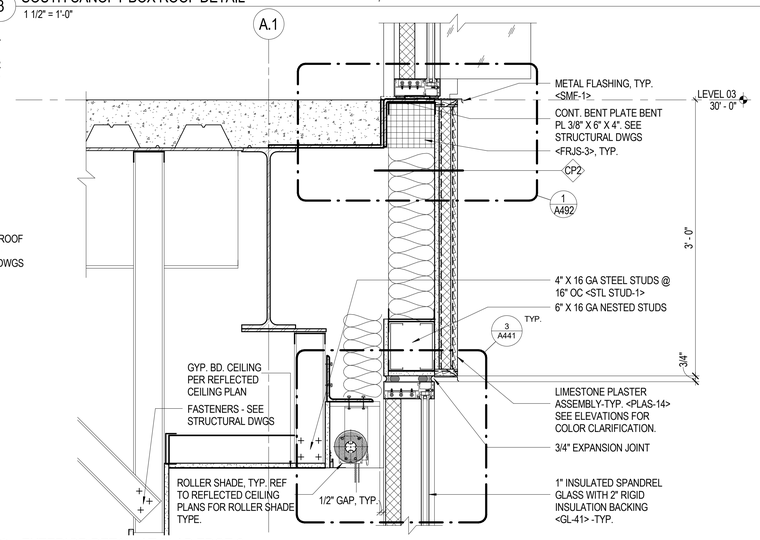

2 EXTERIOR DETAIL AT SLAB EDGE 2
1 1/2" = 1'-0"

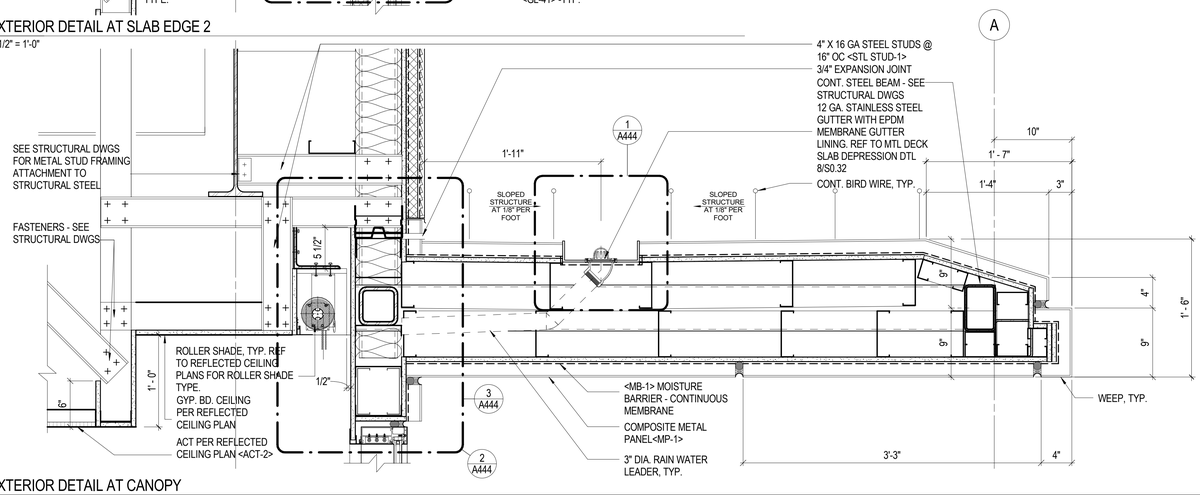

1 EXTERIOR DETAIL AT CANOPY
1 1/2" = 1'-0"

hga.
1918 Main Street, Third Floor
Santa Monica, California 90405
Telephone 310.557.7600

STRUCTURAL ENGINEER
SAIFUL BOUQUET
155 N LAKE AVE
PASADENA, CA 91101
626-304-2616

MECHANICAL & PLUMBING ENGINEER
STANTEC CONSULTING INC
14130 RIVERSIDE DR. # 201
SHERMAN OAKS, CA 91423
818-377-8220

ELECTRICAL ENGINEER
FBA ENGINEERING
150 PAULARINO AVE. #A120
COSTA MESA, CA 92626
949-852-9995

CIVIL ENGINEER
KPFF CONSULTING ENGINEERS
700 SOUTH FLOWER ST. #2100
LOS ANGELES, CA 90017
213-418-0201

LANDSCAPE ARCHITECT
LYNN CAPOUYA, INC.
17992 MITCHELL SOUTH, #110
IRVINE, CA 92614
949-756-0150

LABORATORY CONSULTANT
RESEARCH FACILITIES DESIGN
3965 FIFTH AVE. #400
SAN DIEGO, CA 92103
619-297-0159

SCIENCE CENTER
SANTA ANA COLLEGE
RANCHO SANTIAGO
COMMUNITY COLLEGE
DISTRICT

1530 W. 17TH ST.
SANTA ANA, CA 92706

SANTA ANA
COLLEGE

I HEREBY CERTIFY THAT THIS PLAN, SPECIFICATION OR REPORT WAS PREPARED BY ME OR UNDER MY DIRECT SUPERVISION AND THAT I AM A DULY LICENSED ARCHITECT UNDER THE LAWS OF THE STATE OF CA.

LICENSED ARCHITECT JAMES G. MATSON C-13036 SEPTEMBER 30 2019 RENEWAL DATE STATE OF CALIFORNIA

NAME: JAMES G. MATSON
DATE: MAY 16, 2017
REGISTRATION NUMBER: C13036

NO	DESCRIPTION	DATE
2	Addendum 2	9/1/17

ISSUANCE HISTORY - THIS SHEET

DRAWN BY: RE | REVIEW BY: TE

HGA NO: 3584-001-00

EXTERIOR SECTION DETAILS

DATE: JULY 06, 2017

A435

ADDENDA PACKAGE

© COPYRIGHT HAMMEL, GREEN AND ABRAHAMSON, INC.

C:\Users\tatsky\Documents\Revit Local Files\A16-3584-001-00_SAC-SC_tatsky.rvt
9/1/2017 3:00:01 PM
RE

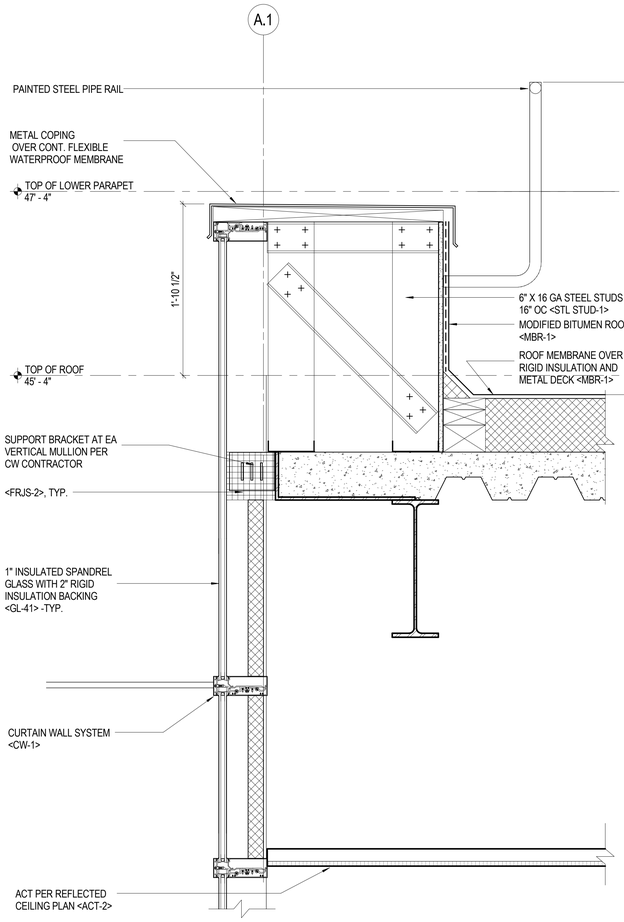

6 EXTERIOR DETAIL AT PARAPET 2
1 1/2" = 1'-0"

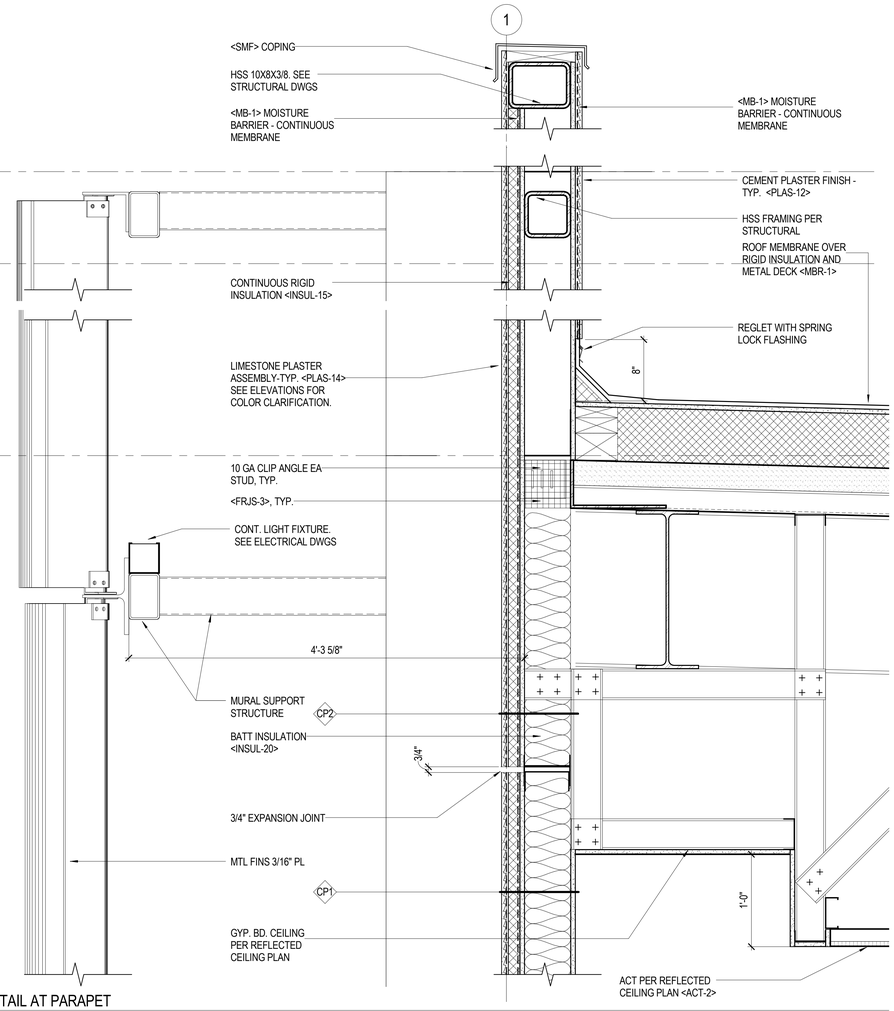

5 EXTERIOR DETAIL AT PARAPET
1 1/2" = 1'-0"

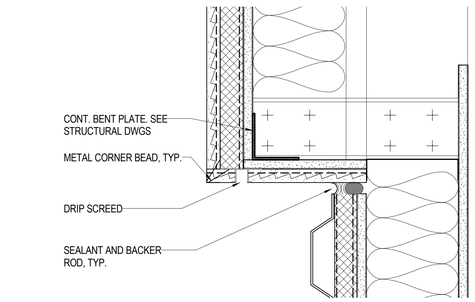

3 ENLARGED DETAIL EXTERIOR WALL TRANSITION
3" = 1'-0"

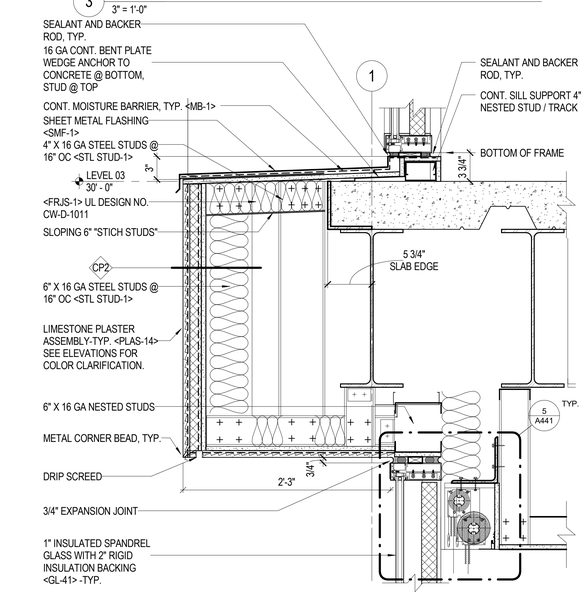

2 EXTERIOR DETAIL AT SLAB EDGE 3
1 1/2" = 1'-0"

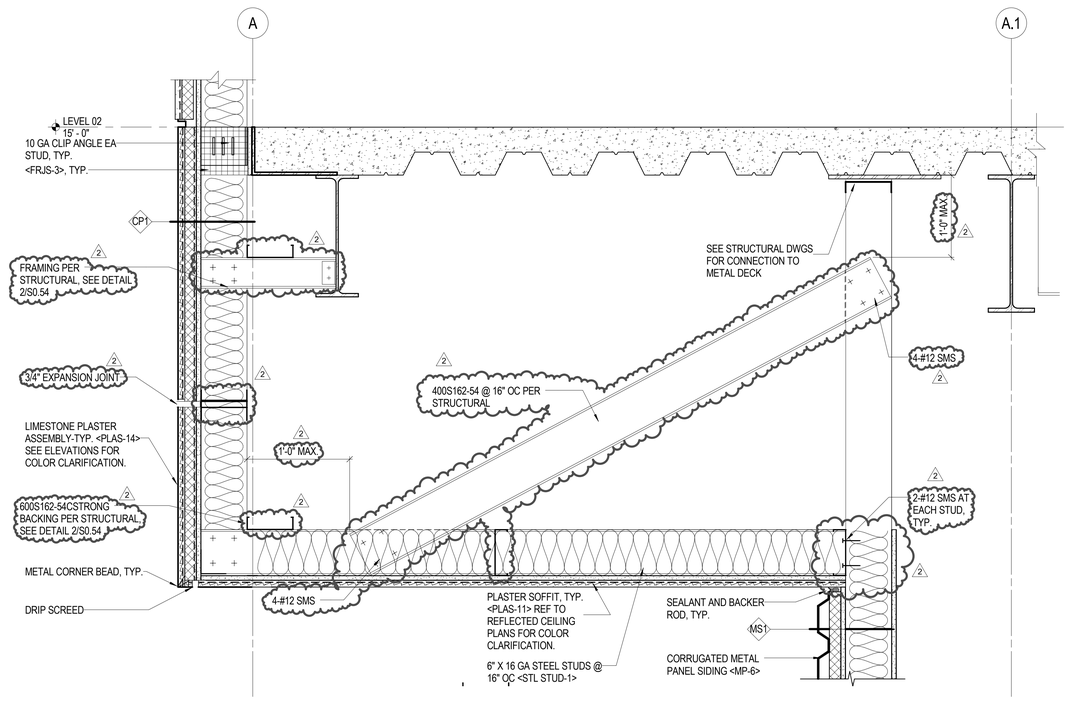

4 EXTERIOR DETAIL AT CLG
1 1/2" = 1'-0"

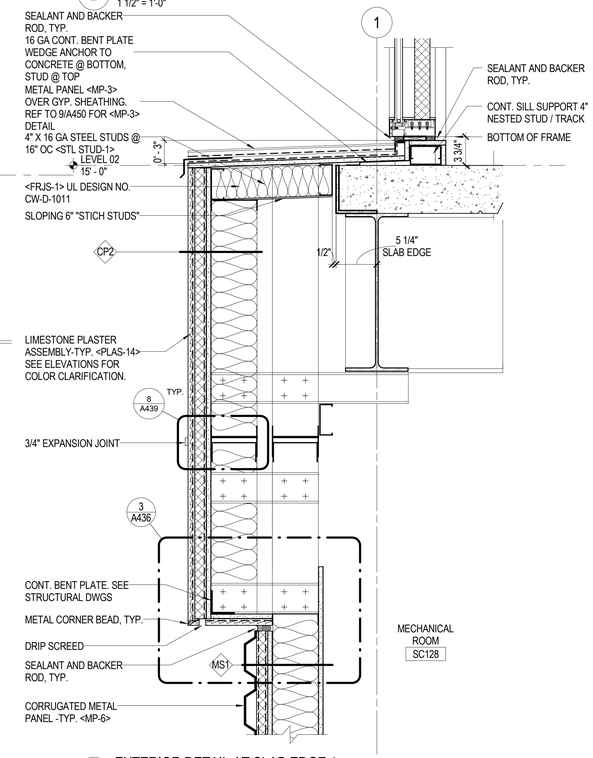

1 EXTERIOR DETAIL AT SLAB EDGE 1
1 1/2" = 1'-0"

hGA.
1918 Main Street, Third Floor
Santa Monica, California 90405
Telephone 310.557.7600

STRUCTURAL ENGINEER
SAIFUL BOUQUET
155 N LAKE AVE
PASADENA, CA 91101
626-304-2616

MECHANICAL & PLUMBING ENGINEER
STANTEC CONSULTING INC
14130 RIVERSIDE DR. # 201
SHERMAN OAKS, CA 91423
818-377-8220

ELECTRICAL ENGINEER
FBA ENGINEERING
150 PAULARINO AVE. #A120
COSTA MESA, CA 92626
949-852-9995

CIVIL ENGINEER
KPFF CONSULTING ENGINEERS
700 SOUTH FLOWER ST. #2100
LOS ANGELES, CA 90017
213-418-0201

LANDSCAPE ARCHITECT
LYNN CAPOUYA, INC.
17992 MITCHELL SOUTH, #110
IRVINE, CA 92614
949-756-0150

LABORATORY CONSULTANT
RESEARCH FACILITIES DESIGN
3965 FIFTH AVE. #400
SAN DIEGO, CA 92103
619-297-0159

SCIENCE CENTER
SANTA ANA COLLEGE

RANCHO SANTIAGO COMMUNITY COLLEGE DISTRICT

1530 W. 17TH ST.
SANTA ANA, CA 92706

SANTA ANA COLLEGE

I HEREBY CERTIFY THAT THIS PLAN, SPECIFICATION OR REPORT WAS PREPARED BY ME OR UNDER MY DIRECT SUPERVISION AND THAT I AM A DULY LICENSED ARCHITECT UNDER THE LAWS OF THE STATE OF CA

LICENSED ARCHITECT JAMES G. MATSON No. 18,911 REGISTERED PROFESSIONAL ENGINEER SEPTEMBER 30, 2017 RENEWAL DATE STATE OF CALIFORNIA

NAME: JAMES G. MATSON
DATE: MAY 16, 2017
REGISTRATION NUMBER: C13036

NO	DESCRIPTION	DATE
2	Addendum 2	9/1/17

ISSUANCE HISTORY - THIS SHEET

DRAWN BY: RE | REVIEW BY: TE

HGA NO: 3584-001-00

EXTERIOR SECTION DETAILS

DATE: JULY 06, 2017

A436

DSA APPROVAL SET

© COPYRIGHT HAMMEL, GREEN AND ABRAHAMSON, INC.

RE 9/1/2017 3:00:02 PM C:\Users\tstacy\Documents\Revit Local Files\A16-3584-001-00_SAC-SC_tstacy.rvt

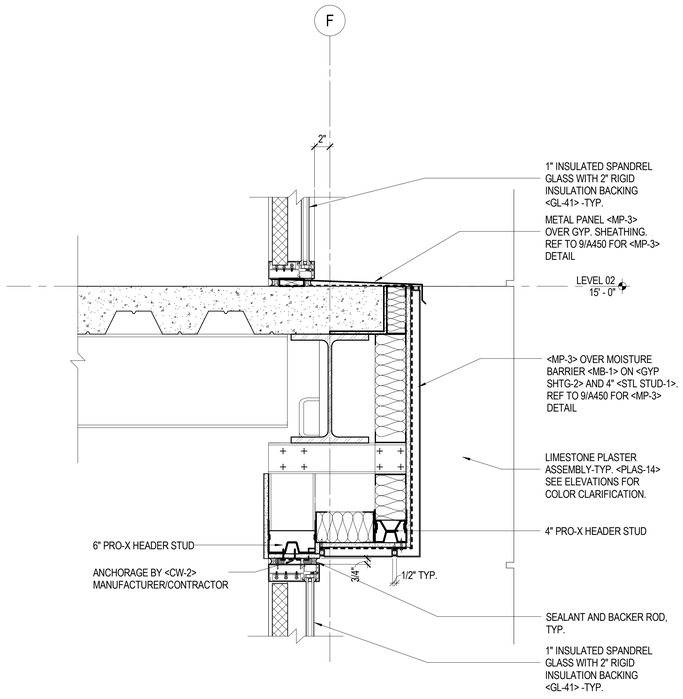

5 EXTERIOR DETAIL
1 1/2" = 1'-0"

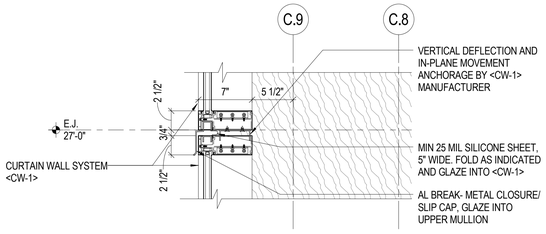

6 HORIZONTAL DRIFT JOINT DETAIL AT CW1
1 1/2" = 1'-0"

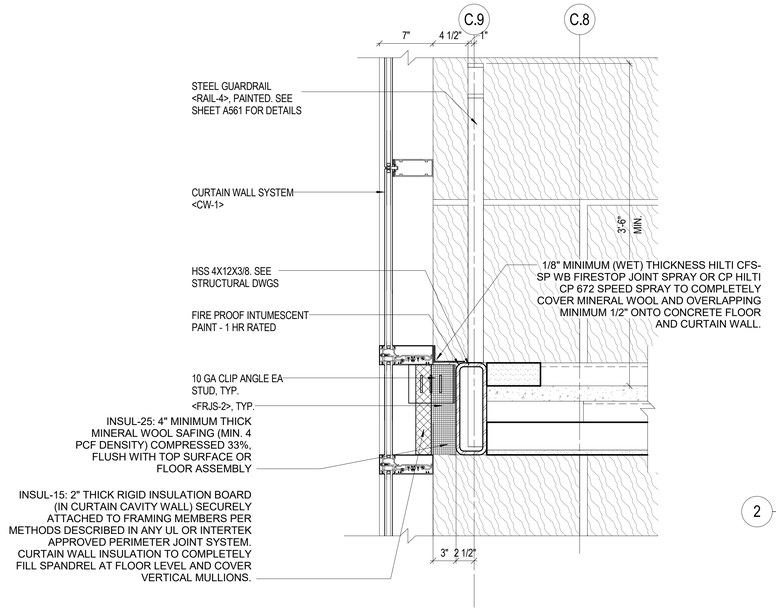

4 EXTERIOR DETAIL AT STAIR #3 INTERMEDIATE LANDING
1 1/2" = 1'-0"

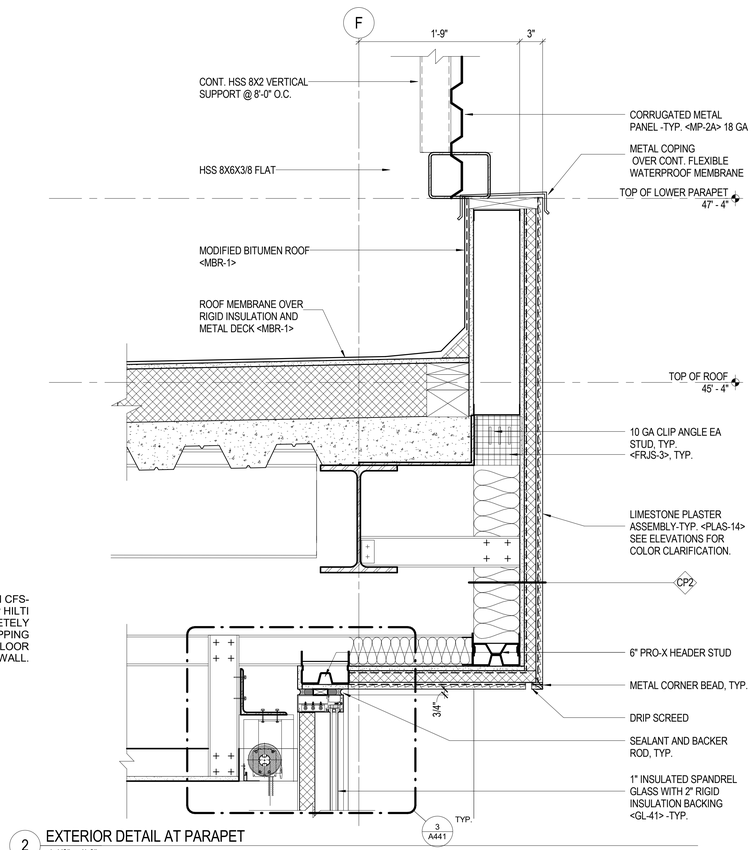

2 EXTERIOR DETAIL AT PARAPET
1 1/2" = 1'-0"

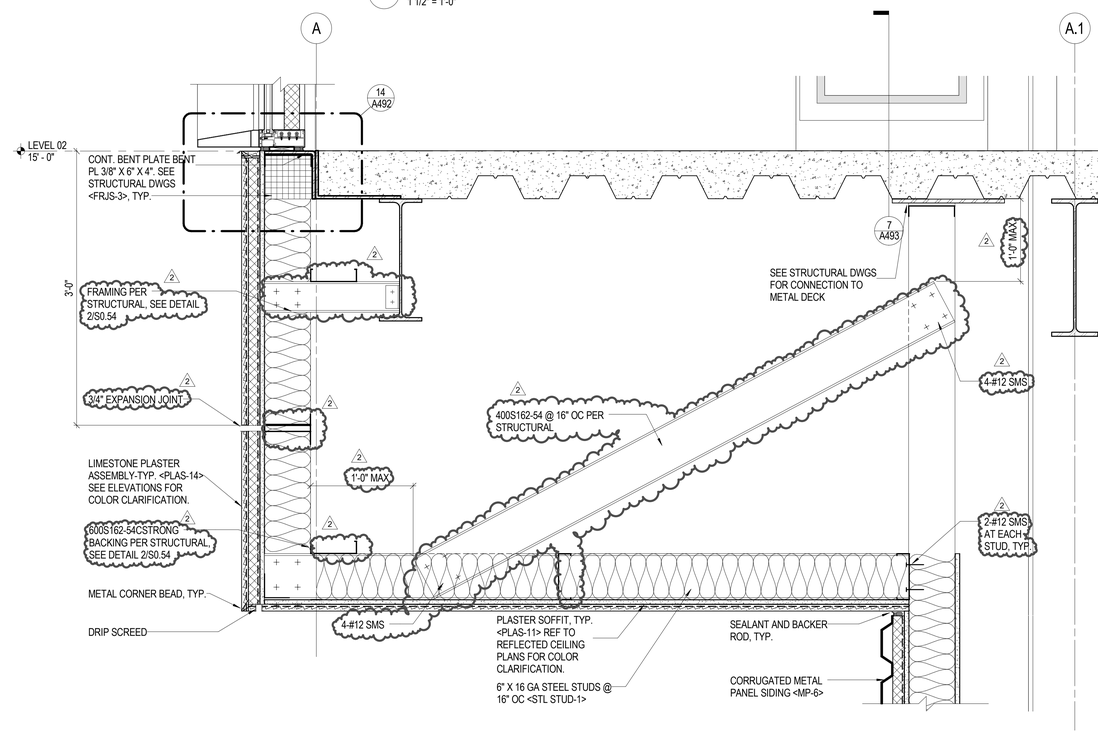

3 EXTERIOR DETAIL PLASTER CEILING
1 1/2" = 1'-0"

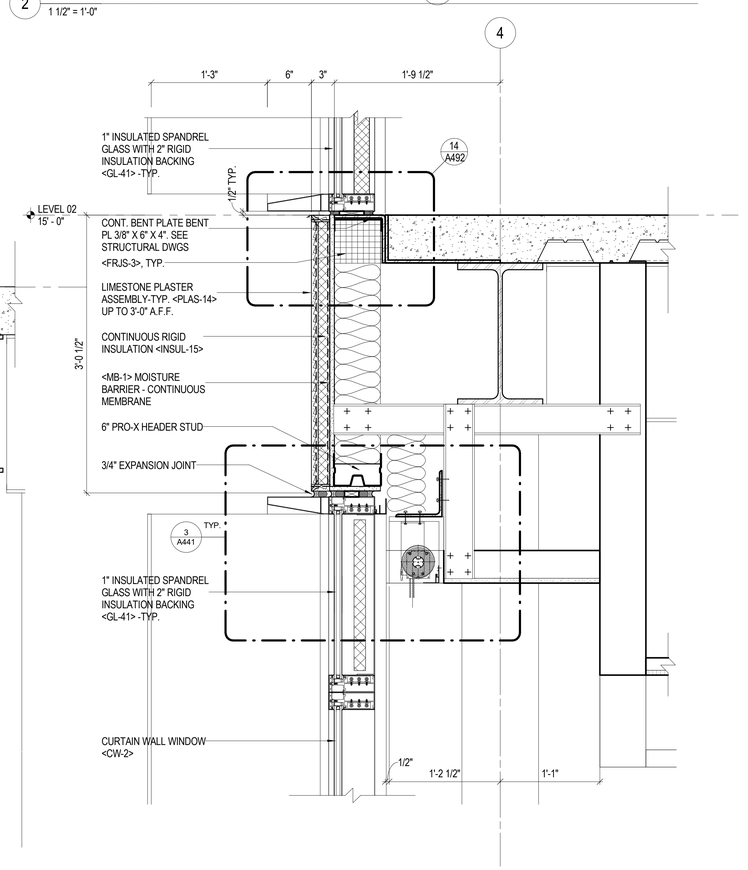

1 EXTERIOR DETAIL AT WINDOW HEAD
1 1/2" = 1'-0"

hga.
1918 Main Street, Third Floor
Santa Monica, California 90405
Telephone 310.557.7600

STRUCTURAL ENGINEER
SAIFUL BOUQUET
155 N LAKE AVE
PASADENA, CA 91101
626-304-2616

MECHANICAL & PLUMBING ENGINEER
STANTEC CONSULTING INC
14130 RIVERSIDE DR. # 201
SHERMAN OAKS, CA 91423
818-377-8220

ELECTRICAL ENGINEER
FBA ENGINEERING
150 PAULARINO AVE. #A120
COSTA MESA, CA 92626
949-852-9995

CIVIL ENGINEER
KPFF CONSULTING ENGINEERS
700 SOUTH FLOWER ST. #2100
LOS ANGELES, CA 90017
213-418-0201

LANDSCAPE ARCHITECT
LYNN CAPOUYA, INC.
17992 MITCHELL SOUTH, #110
IRVINE, CA 92614
949-756-0150

LABORATORY CONSULTANT
RESEARCH FACILITIES DESIGN
3965 FIFTH AVE. #400
SAN DIEGO, CA 92103
619-297-0159

SCIENCE CENTER
SANTA ANA COLLEGE
RANCHO SANTIAGO COMMUNITY COLLEGE DISTRICT
1530 W. 17TH ST.
SANTA ANA, CA 92706

SANTA ANA COLLEGE

I HEREBY CERTIFY THAT THIS PLAN, SPECIFICATION OR REPORT WAS PREPARED BY ME OR UNDER MY DIRECT SUPERVISION AND THAT I AM A DULY LICENSED ARCHITECT UNDER THE LAWS OF THE STATE OF CALIFORNIA

LICENSED ARCHITECT JAMES G. MATSON No. C13036 REGISTERED PROFESSIONAL ENGINEER CIVIL STATE OF CALIFORNIA
SEPTEMBER 30, 2019 RENEWAL DATE

NAME: JAMES G. MATSON
DATE: MAY 16, 2017
REGISTRATION NUMBER: C13036

NO	DESCRIPTION	DATE
1	Addendum 1	8/23/17
2	Addendum 2	9/1/17

ISSUANCE HISTORY - THIS SHEET

DRAWN BY: RE | REVIEW BY: TE

HGA NO: 3584-001-00

EXTERIOR SECTION DETAILS

DATE: JULY 06, 2017

A440

ADDENDA PACKAGE

© COPYRIGHT HAMMEL, GREEN AND ABRAHAMSON, INC.

RE 9/1/2017 3:00:03 PM C:\Users\tstack\Documents\Revit Local Files\A16-3584-001-09_SAC-SC_tstackv1.rvt

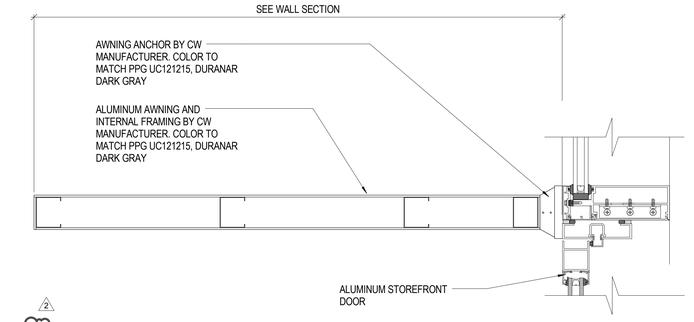

5 ALUMINUM AWNING DETAIL
3" = 1'-0"

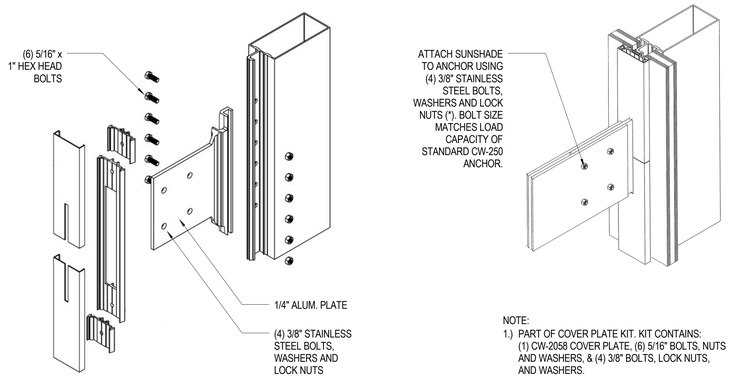

4 SUNSHADE ANCHOR DETAIL
6" = 1'-0"

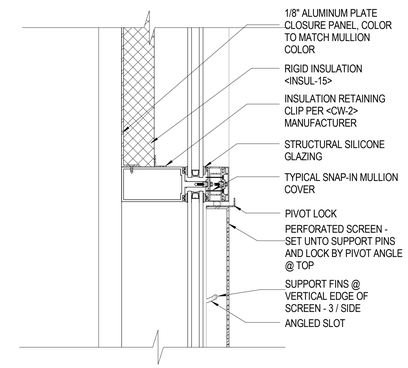

2 INTERMEDIATE HORIZONTAL MULLION AT PERFORATED METAL SCREEN
3" = 1'-0"

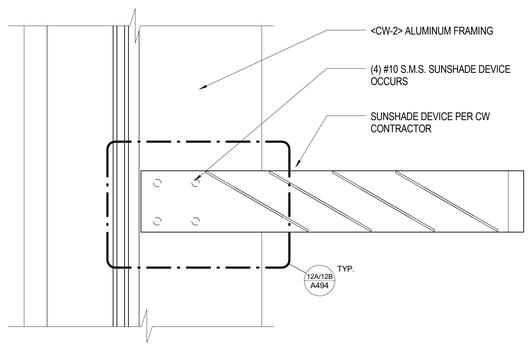

1 WINDOW SUNSHADE DETAIL
3" = 1'-0"

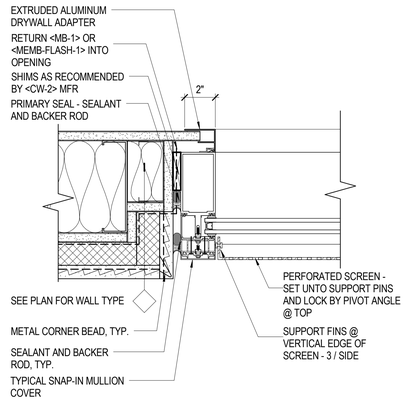

3 WINDOW JAMB AT PERFORATED SCREEN
3" = 1'-0"

hga.
1918 Main Street, Third Floor
Santa Monica , California 90405
Telephone 310.557.7600

STRUCTURAL ENGINEER
SAIFUL BOUQUET
155 N LAKE AVE
PASADENA, CA 91101
626-304-2616

MECHANICAL & PLUMBING ENGINEER
STANTEC CONSULTING INC
14130 RIVERSIDE DR. # 201
SHERMAN OAKS, CA 91423
818-377-8220

ELECTRICAL ENGINEER
FBA ENGINEERING
150 PAULARINO AVE. #A120
COSTA MESA, CA 92626
949-852-9995

CIVIL ENGINEER
KPFF CONSULTING ENGINEERS
700 SOUTH FLOWER ST. #2100
LOS ANGELES, CA 90017
213-418-0201

LANDSCAPE ARCHITECT
LYNN CAPOUYA, INC.
17992 MITCHELL SOUTH, #110
IRVINE, CA 92614
949-756-0150

LABORATORY CONSULTANT
RESEARCH FACILITIES DESIGN
3965 FIFTH AVE. #400
SAN DIEGO, CA 92103
619-297-0159

SCIENCE CENTER
SANTA ANA COLLEGE

RANCHO SANTIAGO COMMUNITY COLLEGE DISTRICT

1530 W. 17TH ST.
SANTA ANA, CA 92706

SANTA ANA COLLEGE

I HEREBY CERTIFY THAT THIS PLAN, SPECIFICATION OR REPORT WAS PREPARED BY ME OR UNDER MY DIRECT SUPERVISION AND THAT I AM A DULY LICENSED ARCHITECT UNDER THE LAWS OF THE STATE OF CA.

LICENSED ARCHITECT JAMES G. MATSON C-13036 SEPTEMBER 30, 2017 RENEWAL DATE STATE OF CALIFORNIA

NAME: JAMES G. MATSON
DATE: MAY 16, 2017
REGISTRATION NUMBER: C13036

NO	DESCRIPTION	DATE
2	Addendum 2	9/1/17

ISSUANCE HISTORY - THIS SHEET

DRAWN BY: Author | REVIEW BY: Approver

HGA NO: 3584-001-00

WINDOW DETAILS

DATE: JULY 06, 2017

A494

ADDENDA PACKAGE

© COPYRIGHT HAMMEL, GREEN AND ABRAHAMSON, INC.

Author 9/1/2017 3:00:04 PM C:\Users\tstacy\Documents\Revit Local Files\A16-3584-001-00_SAC-SC_tstacy.rvt

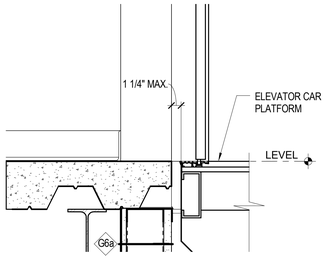

12 ELEVATOR - HOISTWAY LANDING DETAIL
1 1/2" = 1'-0"

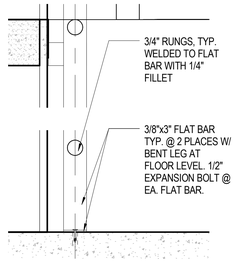

10 ELEVATOR PIT LADDER DETAIL 2
1 1/2" = 1'-0"

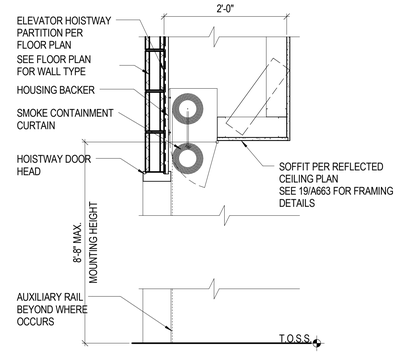

7 SMOKE GUARD HEAD
1" = 1'-0"

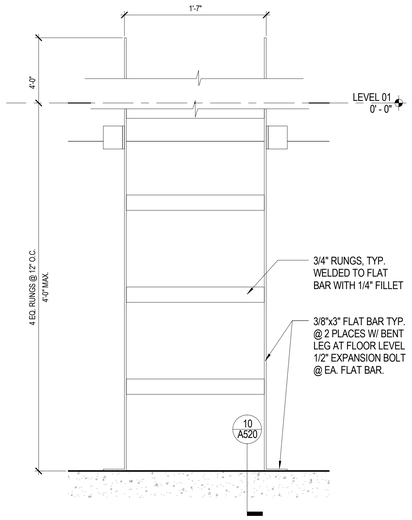

11 ELEVATOR PIT LADDER DETAIL
1 1/2" = 1'-0"

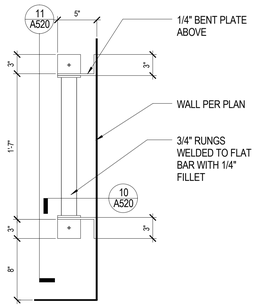

9 PLAN OF LADDER
1 1/2" = 1'-0"

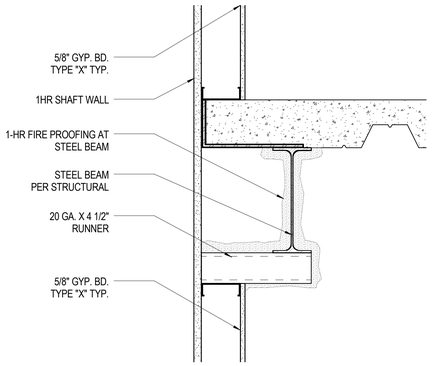

6 WALL DETAIL AT ELEVATOR 2
1 1/2" = 1'-0"

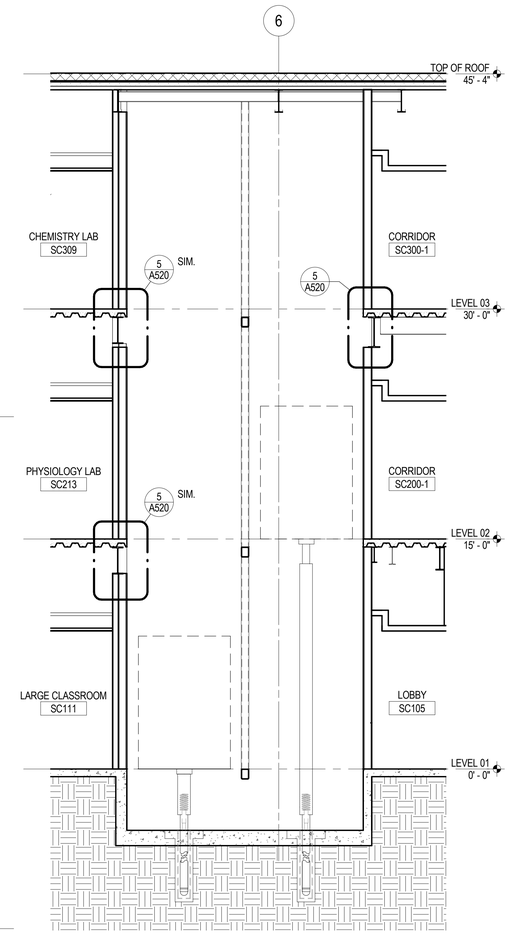

3 ELEVATOR - SECTION 2
1/4" = 1'-0"

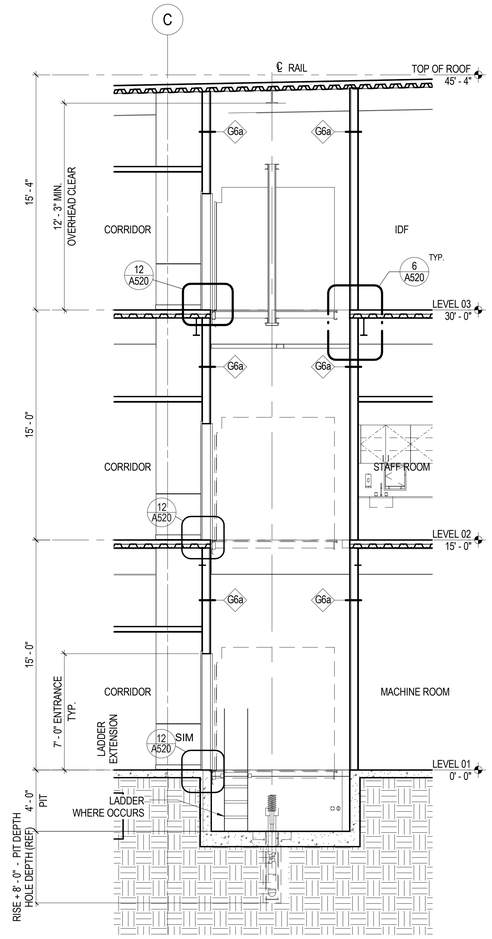

2 ELEVATOR - SECTION 1
1/4" = 1'-0"

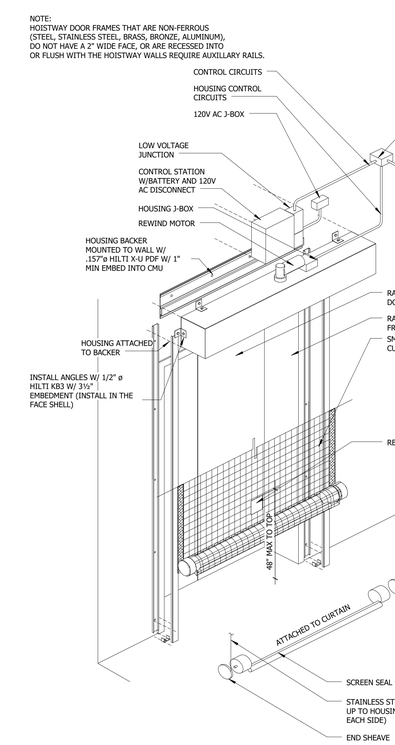

8 SMOKE GUARD
1" = 1'-0"

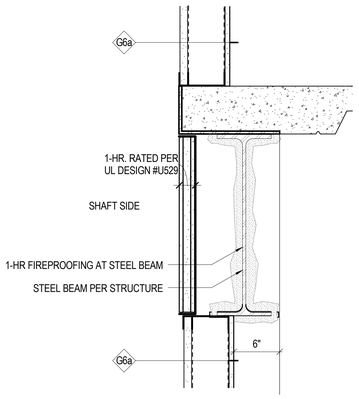

5 WALL DETAIL AT ELEVATOR 1
1 1/2" = 1'-0"

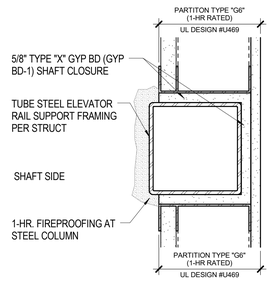

4 PLAN DETAIL AT ELEV. RAIL SUPPORT FRAMING
3" = 1'-0"

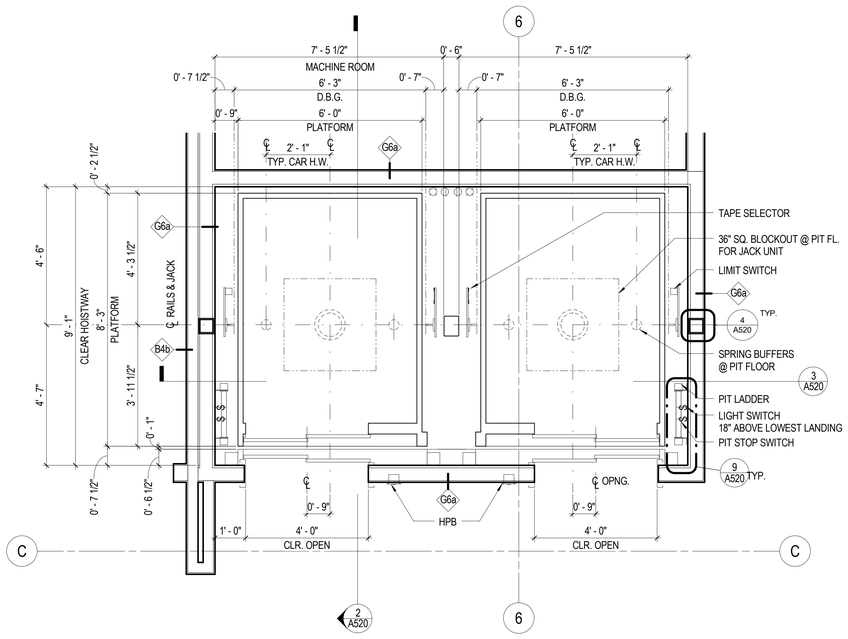

1 ELEVATOR #1 AND #2 PLAN- ENLARGED
1/2" = 1'-0"

GENERAL NOTES:

1. ELEVATOR PUMPS TO BE MOUNTED ON 1" STATIC DEFLECTION SPRING.
2. ALL HYDRAULIC LINES FOR THE ELEVATORS SHALL BE INSTALLED ON NEOPRENE ISOLATORS IF SUSPENDED FROM THE CEILING OR ON SPRING ISOLATORS WITH 0.3" STATIC DEFLECTION IF FLOOR-MOUNTED.
3. PROVIDE MUFFLER ON DISCHARGE OIL LINE FOR THE ELEVATORS.
4. PROVIDE OVERSIZE OPENING IN THE SLAB OR WALL FOR THE OIL LINE PENETRATION THROUGH A SLEEVE FILLED WITH RESILIENT FIRESTOPPING MATERIAL, TYP. FOR THE ELEVATORS.
5. ELEVATOR CYLINDER TO BE MOUNTED ON NEOPRENE PADS (MASON INDUSTRIES TYPE SUPER W OR APPROVED EQUAL) WITH 0.1" STATIC DEFLECTION, TYP.
6. ALL ELECTRICAL CONNECTIONS SHOULD HAVE FLEXIBLE CONDUIT CONNECTING TO THE ELECTRICAL EQUIPMENT, TYP.
7. ELEVATORS TO BE CONNECTED TO EMERGENCY POWER. REF TO ELECTRICAL DWGS FOR MORE INFO.

hga.
1918 Main Street, Third Floor
Santa Monica, California 90405
Telephone 310.557.7600

STRUCTURAL ENGINEER
SAIFUL BOUQUET
155 N LAKE AVE
PASADENA, CA 91101
626-304-2616

MECHANICAL & PLUMBING ENGINEER
STANTEC CONSULTING INC
14130 RIVERSIDE DR. # 201
SHERMAN OAKS, CA 91423
818-377-8220

ELECTRICAL ENGINEER
FBA ENGINEERING
150 PAULARINO AVE. #A120
COSTA MESA, CA 92626
949-852-9995

CIVIL ENGINEER
KPFF CONSULTING ENGINEERS
700 SOUTH FLOWER ST. #2100
LOS ANGELES, CA 90017
213-418-0201

LANDSCAPE ARCHITECT
LYNN CAPOUYA, INC.
17992 MITCHELL SOUTH, #110
IRVINE, CA 92614
949-756-0150

LABORATORY CONSULTANT
RESEARCH FACILITIES DESIGN
3965 FIFTH AVE. #400
SAN DIEGO, CA 92103
619-297-0159

SCIENCE CENTER
SANTA ANA COLLEGE
RANCHO SANTIAGO COMMUNITY COLLEGE DISTRICT
1530 W. 17TH ST.
SANTA ANA, CA 92706

SANTA ANA COLLEGE

I HEREBY CERTIFY THAT THIS PLAN, SPECIFICATION OR REPORT WAS PREPARED BY ME OR UNDER MY DIRECT SUPERVISION AND THAT I AM A DULY LICENSED ARCHITECT UNDER THE LAWS OF THE STATE OF CALIFORNIA

LICENSED ARCHITECT JAMES G. MATSON No. C13036 REGISTERED PROFESSIONAL ENGINEER CIVIL STRUCTURAL MECHANICAL ELECTRICAL
SEPTEMBER 30, 2019 RENEWAL DATE
STATE OF CALIFORNIA

NAME: JAMES G. MATSON
DATE: MAY 16, 2017
REGISTRATION NUMBER: C13036

NO	DESCRIPTION	DATE
2	Addendum 2	9/1/17

ISSUANCE HISTORY - THIS SHEET

DRAWN BY: SK | REVIEW BY: TE

HGA NO: 3584-001-00

ELEVATOR 1 & 2 - PLANS AND SECTIONS

DATE: JULY 06, 2017

A520

ADDENDA PACKAGE

© COPYRIGHT HAMMEL, GREEN AND ABRAHAMSON, INC.

9/1/2017 3:00:15 PM C:\Users\sktaylor\Documents\Revit Local Files\A16-3584-001-00_SAC-SC_sktaylor.rvt SK

THROUGH PENETRATION FIRESTOP - UL SYSTEMS

CONCRETE FLOORS		
TYPE OF PENETRANT	F-RATING (HR)	UL-CLASSIFIED SYSTEM
CIRCULAR BLANK OPENINGS	1	F-A-0006, C-AJ-0055, C-AJ-0090
	2	F-A-0006, C-AJ-0055, C-AJ-0090
	3	F-A-0006, C-AJ-0055, C-AJ-0086, F-A-0014
SINGLE METAL PIPES OR CONDUIT	1	C-AJ-1226, F-A-1028
	2	C-AJ-1226, F-A-1028
	3	C-AJ-1226, F-A-1017
	4	C-BJ-1037, C-BJ-1034
SINGLE NON-METALLIC PIPE OR CONDUIT (I.E. PVC, CPVC, ABS, FRP, ENT)	1	F-A-2053, F-A-2025, C-AJ-2109, C-AJ-2098, C-AJ-2271, C-AJ-2167, C-BJ-2021, C-AJ-2342
	2	F-A-2053, F-A-2025, C-AJ-2109, C-AJ-2098, C-AJ-2271, C-AJ-2167, C-BJ-2021, C-AJ-2371, C-AJ-2342
	3	F-A-2054, C-AJ-2109, C-AJ-2098, C-AJ-2371, C-AJ-2342
	4	C-BJ-2016, C-AJ-2017
SINGLE OR BUNDLED CABLES	1	F-A-3007, C-AJ-3095, C-AJ-3180
	2	F-A-3007, C-AJ-3095, C-AJ-3180, F-A-3060
	3	F-A-3007, C-AJ-3095, C-AJ-3180
CABLE TRAY	1	C-AJ-4034, C-AJ-4035
	2	C-AJ-4034, C-AJ-4035
	3	C-AJ-4034, C-AJ-4035
SINGLE INSULATED PIPES	1	F-A-5015, F-A-5017, C-AJ-5090, C-AJ-5091, C-AJ-5098
	2	F-A-5015, F-A-5017, C-AJ-5090, C-AJ-5091, C-AJ-5090
	3	F-A-5016, C-AJ-5090, F-A-5018
	4	C-BJ-5006
ELECTRICAL BUSWAY	1	C-AJ-6006, C-AJ-6017, F-A-6002, C-AJ-6036
	2	C-AJ-6006, C-AJ-6017, F-A-6002, C-AJ-6036
	3	C-AJ-6006, C-AJ-6017
NON-INSULATED MECHANICAL DUCTWORK WITHOUT DAMPERS	1	C-AJ-7046, C-AJ-7051, C-AJ-7084
	2	C-AJ-7046, C-AJ-7051, C-AJ-7084
	3	C-AJ-7046, C-AJ-7051
INSULATED MECHANICAL DUCTWORK WITHOUT DAMPERS	N/A**	N/A**
MIXED PENETRANTS	1	C-AJ-8099, C-AJ-8056, C-AJ-8143
	2	C-AJ-8099, C-AJ-8056, C-AJ-8143
	3	C-AJ-8099, C-AJ-8056
	4	C-AJ-8095

GYPSUM WALLBOARD ASSEMBLIES		
TYPE OF PENETRANT	F-RATING (HR)	UL-CLASSIFIED SYSTEM
METAL PIPES OR CONDUIT	1	W-L-1054, W-L-1058, W-L-1164
	2	W-L-1054, W-L-1058, W-L-1164
	4	W-L-1110, W-L-1111, W-L-1165
NON-METALLIC PIPE OR CONDUIT	1	W-L-2078, W-L-2075, W-L-2128
	2	W-L-2078, W-L-2075, W-L-2128
	4	W-L-2184, W-L-2245
SINGLE OR BUNDLED CABLES	1	W-L-3065, W-L-3111, W-L-3112
	2	W-L-3065, W-L-3111, W-L-3112, W-L-3334, W-L-3414, W-L-3396
	4	W-L-3139
CABLE TRAY	1	W-L-4011, W-L-4019
	2	W-L-4011, W-L-4019
	4	W-L-8014
INSULATED PIPES	1	W-L-5028, W-L-5029, W-L-5047
	2	W-L-5028, W-L-5029, W-L-5047
	4	W-L-5073
NON-INSULATED MECHANICAL DUCTWORK WITHOUT DAMPERS	1	W-L-7017, W-L-7040, W-L-7042, W-L-7155
	2	W-L-7040, W-L-7042, W-L-7155
INSULATED MECHANICAL DUCTWORK WITHOUT DAMPERS	1	W-L-7059, W-L-7153, W-L-7156, W-L-7151
	2	W-L-7059, W-L-7153, W-L-7156, W-L-7151
MIXED PENETRANTS	1	W-L-1095, W-L-8013
	2	W-L-1095, W-L-8013
	4	W-L-8014

Fire Resistive Joint Schedule – UL Listed Assemblies

Joint Type	Assembly Hr. Rating	UL System Reference
HEAD OF PARTITION - PARALLEL TO FLUTED DECK	1 and 2 Hr.	HW-D-0264
HEAD OF PARTITION - PARALLEL TO FLUTED DECK	1 and 2 Hr.	HW-D-0539
HEAD OF PARTITION - PARALLEL TO FLUTED DECK WITH CATILEVERED RUNNER	1 and 2 Hr.	HW-D-0687
HEAD OF PARTITION - PERPENDICULAR TO FLUTED DECK	1 and 2 Hr.	HW-D-0538
HEAD OF PARTITION - CONCRETE SLAB	1 and 2 Hr.	HW-D-0540
HEAD OF PARTITION - PARALLEL OR PERPENDICULAR WITH STRUCTURAL STEEL OBSTRUCTION	1 and 2 Hr.	HW-D-0388
HEAD OF PARTITION - OFFSET I-BEAM WITH Z-CHANNEL	1 and 2 Hr.	HW-D-0634, HW-D-0635
HEAD OF PARTITION - ONE SIDE ACCESS DUE TO STRUCTURAL MEMBER	1 and 2 Hr.	HW-D-0639
HEAD OF PARTITION - PARALLEL TO FIREPROOFED STEEL BEAM	1 and 2 Hr.	HW-D-0259
HEAD OF PARTITION - FLUTED DECK WITH STRUCTURAL STEEL BEAM THROUGH PENETRATING	1 and 2 Hr.	HW-D-0218
HEAD OF PARTITION – FLAT CONCRETE SLAB	1 and 2 Hr.	HW-D-0757
HEAD OF PARTITION DEMISING – FLAT CONCRETE SLAB	1 and 2 Hr.	HW-D-0758
HEAD OF SHAFT WALL - TO CONCRETE SLAB	2 hr.	HW-D-0342
HEAD OF SHAFT WALL - TO CONCRETE SLAB	1 and 2 Hr.	HW-D-0572
HEAD OF SHAFT WALL - PERPENDICULAR TO FLUTED DECK	1 and 2 Hr.	HW-D-0569
HEAD OF SHAFT WALL - PARALLEL TO FLUTED DECK	1 and 2 Hr.	HW-D-0570
HEAD OF SHAFT WALL - PARALLEL TO FIREPROOFED STEEL BEAM	1 and 2 Hr.	HW-D-0571
HEAD OF SHAFT WALL - OFFSET I BEAM WITH Z CHANNEL	1 and 2 Hr.	HW-D-0636
HEAD OF SHAFT WALL - ONE SIDE ACCESS DUE TO STRUCTURAL MEMBER	1 and 2 Hr.	HW-D-0639, shaft HW-D-0640
BOTTOM OF PARTITION	1 and 2 Hr.	BW-S-0001, BW-S-0002
BOTTOM OF SHAFT WALL PARTITION	1 and 2 Hr.	BW-S-0023

10 TYPICAL RATED PENETRATION DESIGN NUMBERS (2)

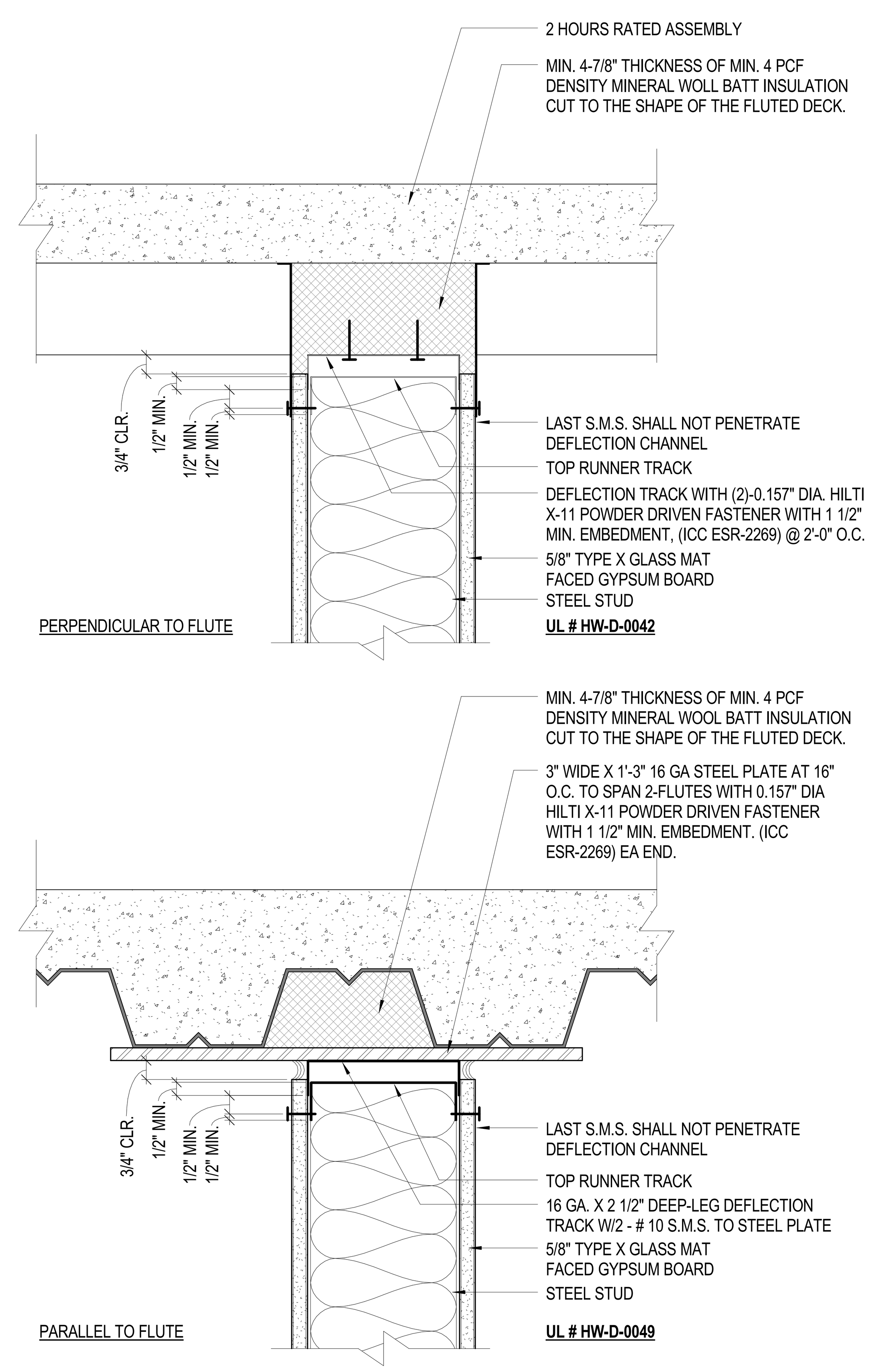

9 FIRESTOP AT STEEL DECK (1-HR)
3" = 1'-0"

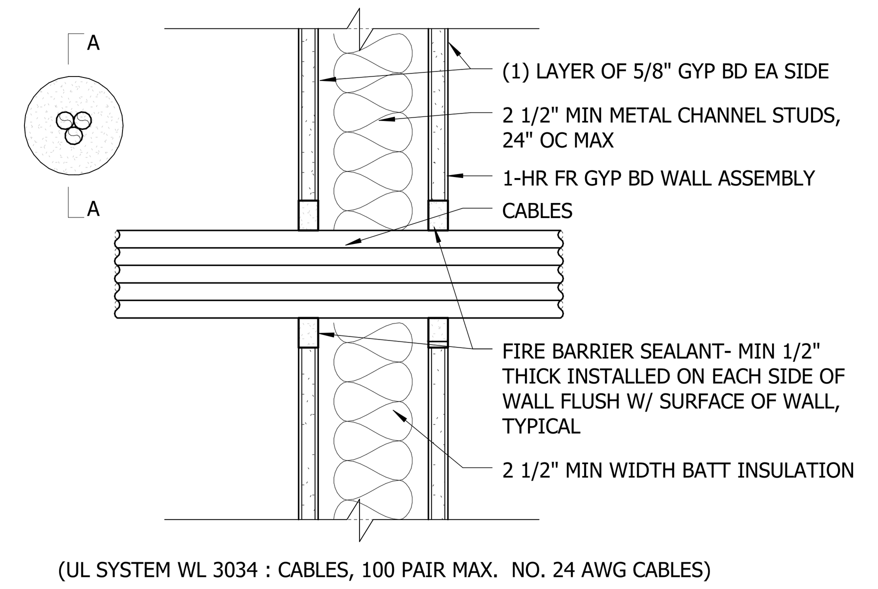

(UL SYSTEM WL 3034 : CABLES, 100 PAIR MAX. NO. 24 AWG CABLES)

C CABLE PENETRATION FIRE-STOPPING @ 1 HR. WALL ASSEMBLY

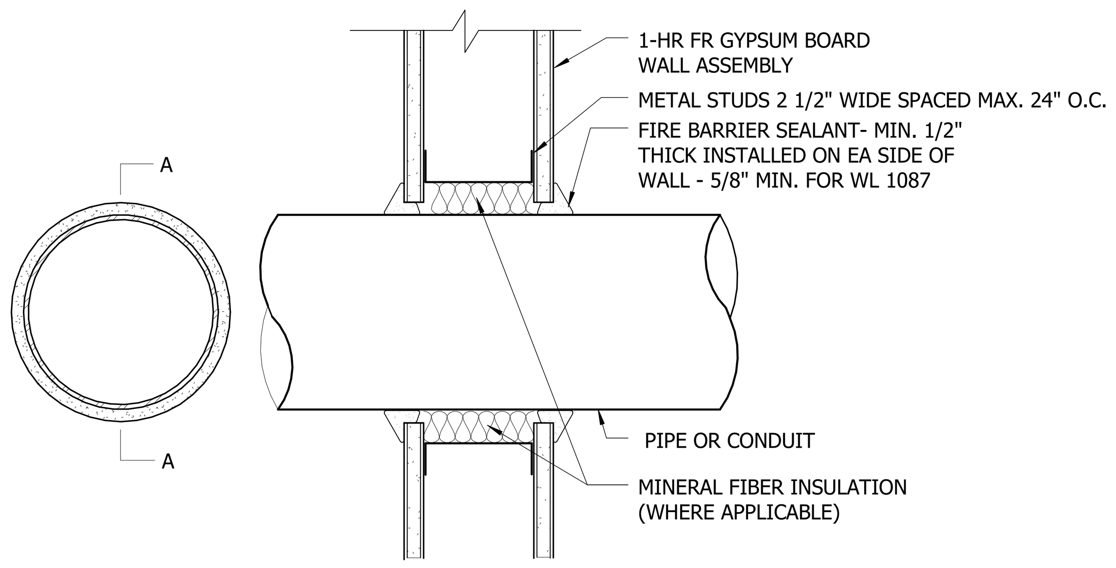

(UL WL 1087 < 4"⌀ - (1) OR (2) COMPONENT FILL)
(UL WL 1039 < 4"⌀ - MINERAL FIBER PACKING W/ SEALANT FILL)
(UL WL 2036 < 4"⌀ - NONE METALLIC PIPE; MINERAL WOOL PACKING, SEALANT, WRAP STRIP & COLLAR)

B TYPICAL PIPE/ CONDUIT FIRE-STOPPING @1-HR WALL ASSEMBLY

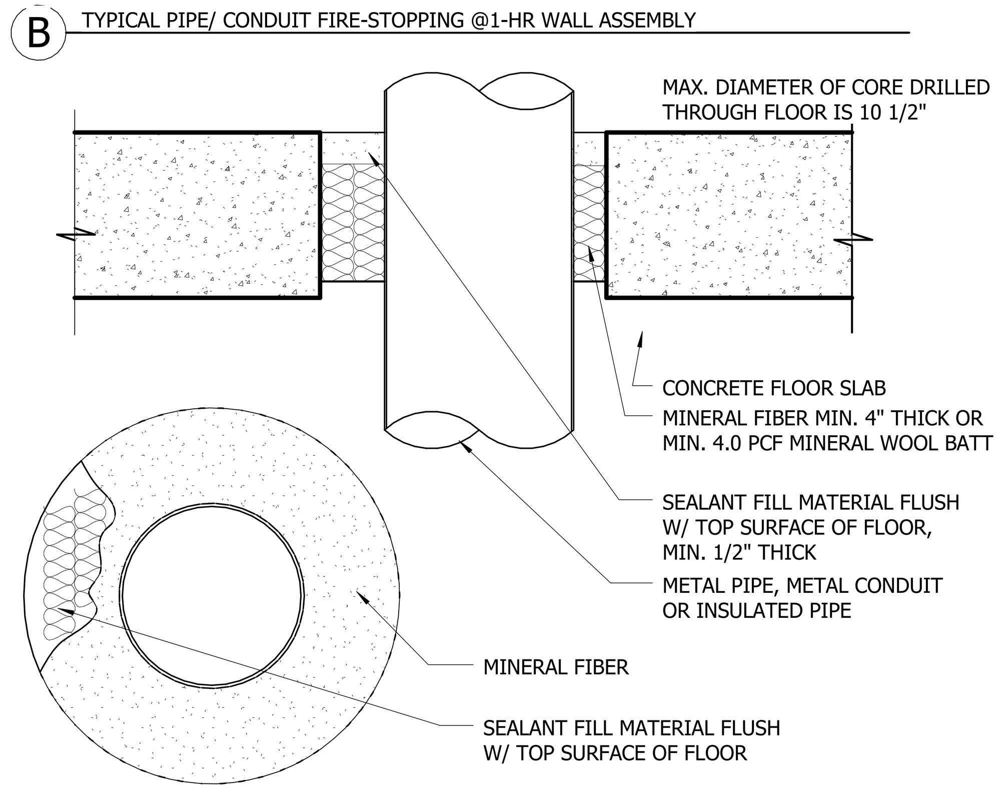

(UL DES F-A-1020; MINERAL FIBER PACKING AND SEALANT FILL)
(UL DES F-A-5014; MINERAL FIBER PACKING AND SEALANT FILL)

A FLUTED METAL/ STEEL DECK ASSEMBLY

8 UL DES FIRE RATED PIPE PENETRATION
3" = 1'-0"

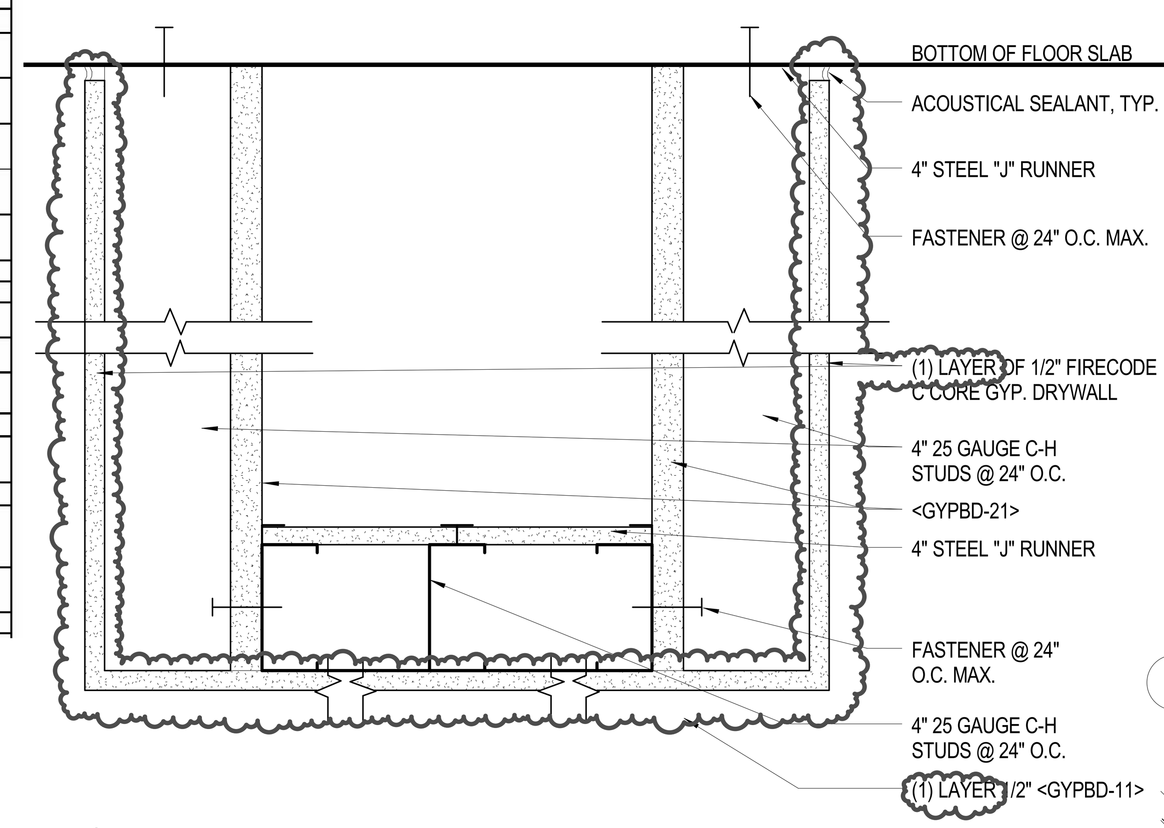

7 1 HR. DUCT ENCLOSURE
3" = 1'-0"

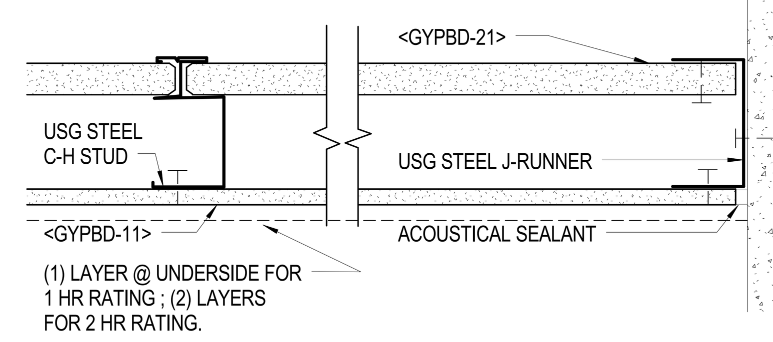

6 RATED HORIZONTAL PARTITION
3" = 1'-0"

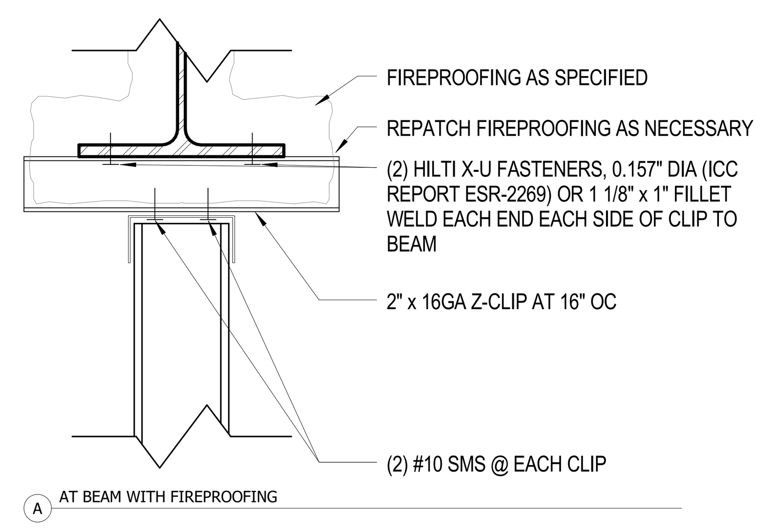

A AT BEAM WITH FIREPROOFING

5 SPECIAL ATTACHMENT (REQUIREMENTS AT FULL HT PTN)
3" = 1'-0"

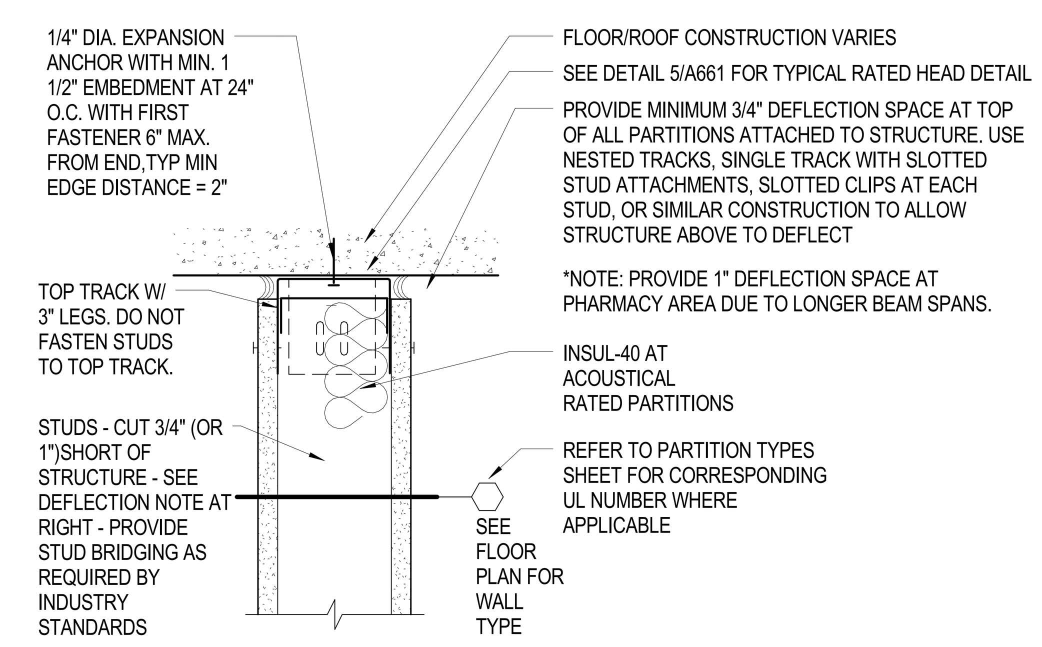

A TOP OF WALL

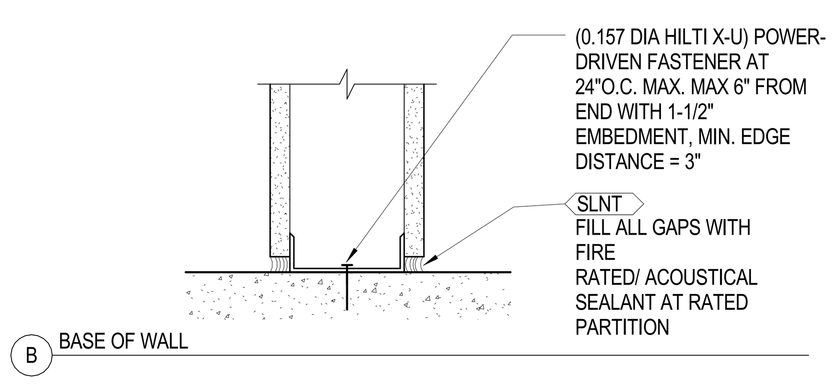

B BASE OF WALL

4 TYP DEFLECTION JOINT & FLOOR CLOSURE AT PARTITIONS
3" = 1'-0"

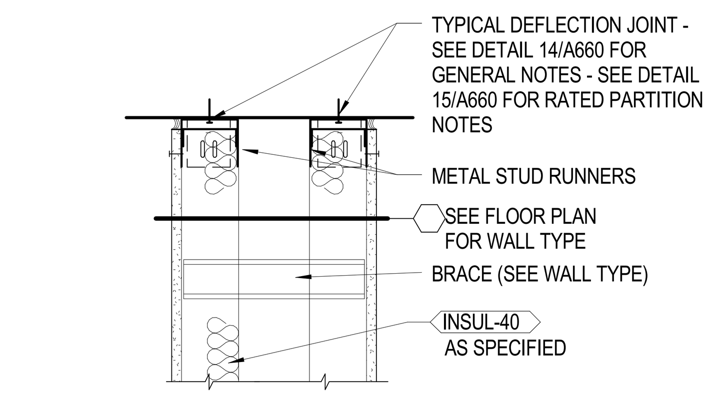

A CHASE PARTITION AT STRUCTURE

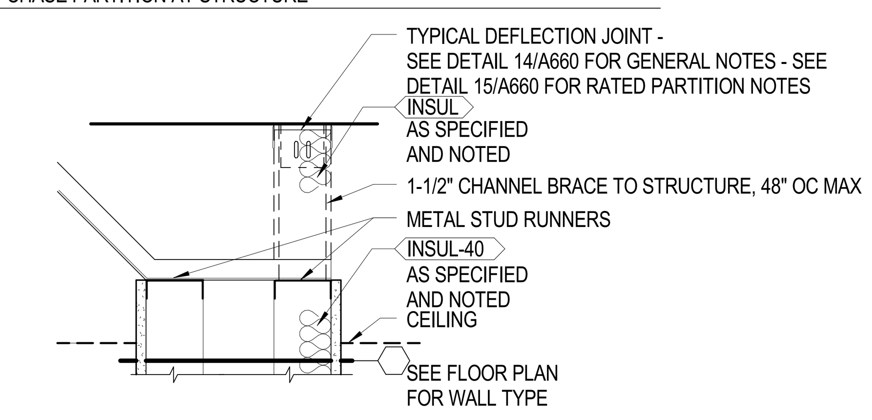

B CHASE PARTITION AT CEILING

3 CHASE PARTITION TERMINATION DETAILS
1 1/2" = 1'-0"

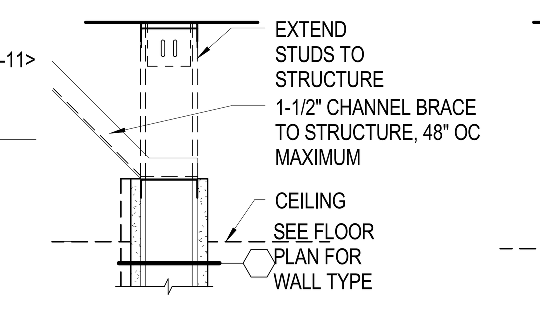

B PTN AT CLG/STRUCT (NON RTD PTN)
1 1/2" = 1'-0"

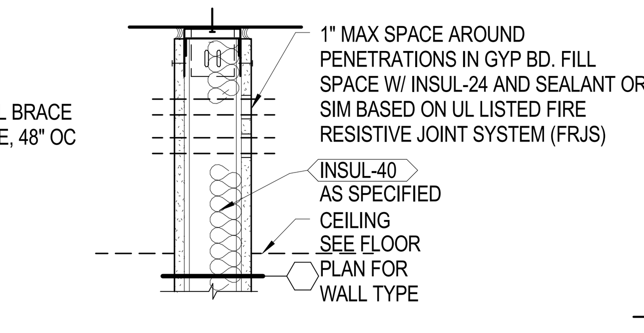

D PTN AT CLG/STRUCT (SOUND RTD PTN)

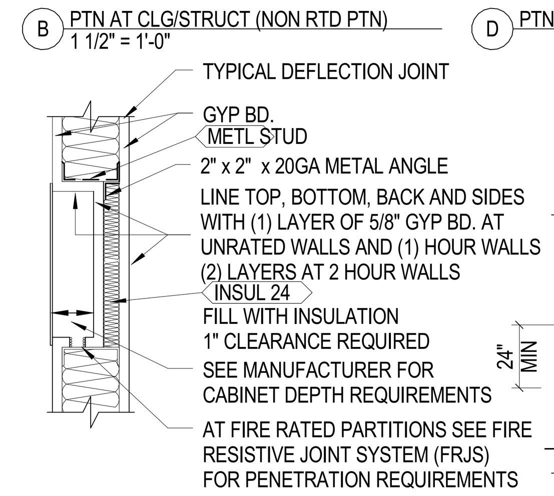

E PTN AT CABINET (FIRE/SOUND RTD)

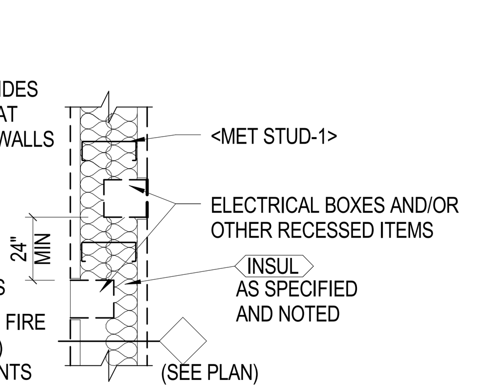

F PTN AT PENETRATION (FIRE/SOUND RTD)

2 TYPICAL PARTITION DETAILS
1 1/2" = 1'-0"

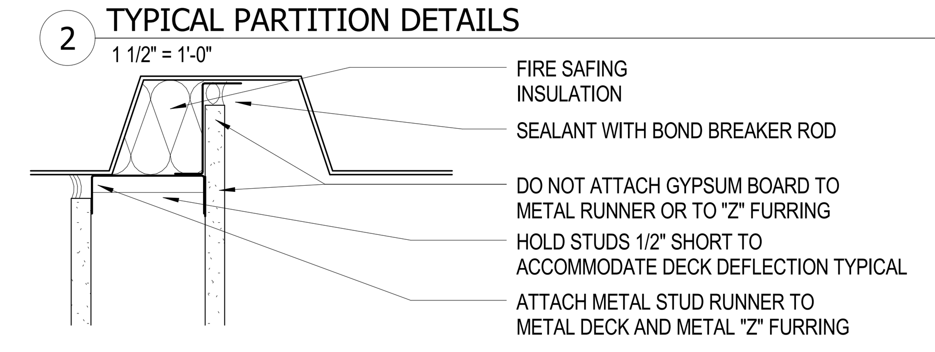

C PARTITION PARALLEL TO DECK FLUTES (PARTITION AT HIGH POINT OF DECK FLUTE)- OPTION 2

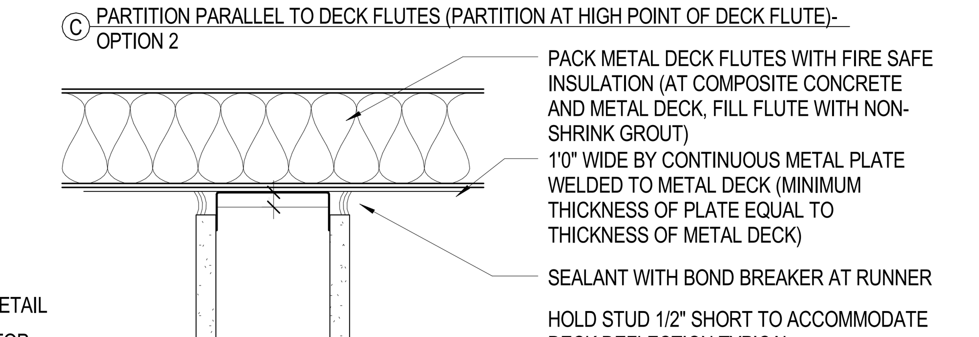

D PARTITION PERPENDICULAR TO DECK FLUTES- OPTION 1

GYPSUM BOAR AND METAL STUD FIRE RATED PARTITIONS AT METAL DECK (COMPOSITE AND CELLULAR DECK SIMILAR)

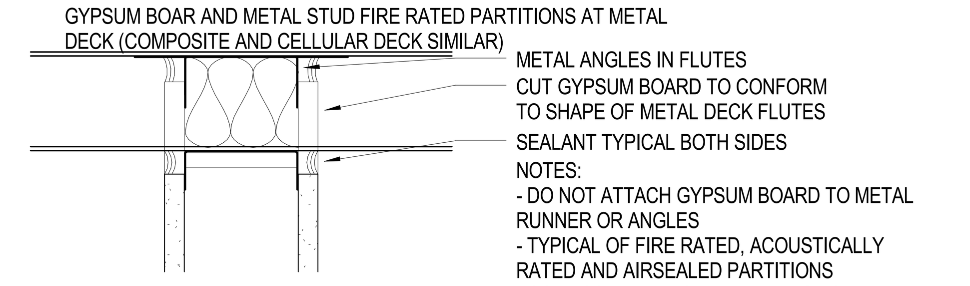

E PARTITION PERPENDICULAR TO DECK FLUTES- OPTION 2

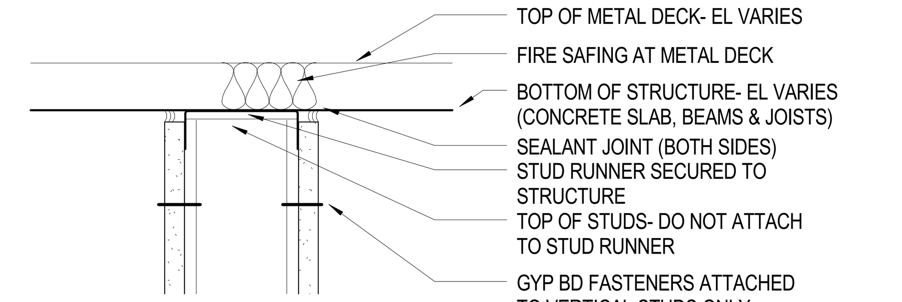

F PARTITION AT ABOVE FLOOR STRUCTURE

NOTE: REFER TO FLOOR PLANS FOR PARTITION TYPES

GENERAL NOTES:
1. FRJS TO ACCOMODATE L/360 DELECTION.
2. DETAILS INDICATE GYPSUM BOARD AND METAL STUD AT FIRE RATED, ACOUSTIC AND SMOKE SEALED PARTITIONS WITH COMPOSITE AND CELLULAR DECK CONNECTIONS.
3. THESE DETAILS ARE ILLUSTRATIVE OF TYPICAL CONDITIONS. OTHER CONDITIONS MAY OCCUR WHICH SHALL BE TREATED IN SIMILAR FASHION TO THOSE SHOWN HERE.
4. ACOUSTICAL RATED DETAILS SIM

1 GYPSUM BOARD PARTITION HEAD DETAILS
3" = 1'-0"

HGA
1918 Main Street, Third Floor
Santa Monica, California 90405
Telephone 310.557.7600

STRUCTURAL ENGINEER
SAIFUL BOUQUET
155 N LAKE AVE
PASADENA, CA 91101
626-304-2616

MECHANICAL & PLUMBING ENGINEER
STANTEC CONSULTING INC
14130 RIVERSIDE DR. # 201
SHERMAN OAKS, CA 91423
818-377-8220

ELECTRICAL ENGINEER
FBA ENGINEERING
150 PAULARINO AVE. #A120
COSTA MESA, CA 92626
949-852-9995

CIVIL ENGINEER
KPFF CONSULTING ENGINEERS
700 SOUTH FLOWER ST. #2100
LOS ANGELES, CA 90017
213-418-0201

LANDSCAPE ARCHITECT
LYNN CAPOUYA, INC.
17992 MITCHELL SOUTH, #110
IRVINE, CA 92614
949-756-0150

LABORATORY CONSULTANT
RESEARCH FACILITIES DESIGN
3965 FIFTH AVE. #400
SAN DIEGO, CA 92103
619-297-0159

SCIENCE CENTER
SANTA ANA COLLEGE
RANCHO SANTIAGO COMMUNITY COLLEGE DISTRICT
1530 W. 17TH ST.
SANTA ANA, CA 92706

SANTA ANA COLLEGE

I HEREBY CERTIFY THAT THIS PLAN, SPECIFICATION OR REPORT WAS PREPARED BY ME OR UNDER MY DIRECT SUPERVISION AND THAT I AM A DULY LICENSED ARCHITECT UNDER THE LAWS OF THE STATE OF CA.

LICENSED ARCHITECT JAMES G. MATSON C13036 SEPTEMBER 30, 2019 RENEWAL DATE STATE OF CALIFORNIA

NAME: JAMES G. MATSON
DATE: MAY 16, 2017
REGISTRATION NUMBER: C13036

NO	DESCRIPTION	DATE
2	Addendum 2	9/1/17

ISSUANCE HISTORY - THIS SHEET

DRAWN BY: SK REVIEW BY: Approver

HGA NO: 3584-001-00

FIRE RATED PARTITION DETAILS

DATE: JULY 06, 2017

A661

ADDENDA PACKAGE

© COPYRIGHT HAMMEL, GREEN AND ABRAHAMSON, INC.

SK 9/1/2017 3:00:16 PM C:\Users\lsstacyk\Documents\Revit Local Files\A16-3584-001-00_SAC SC_lsstacyk.rvt

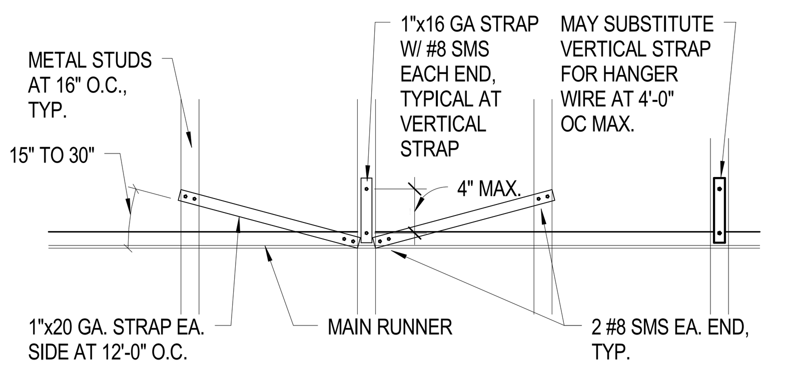

18 ALT. CORR. HANGER AND BRACING SLIP CONN.
3" = 1'-0"

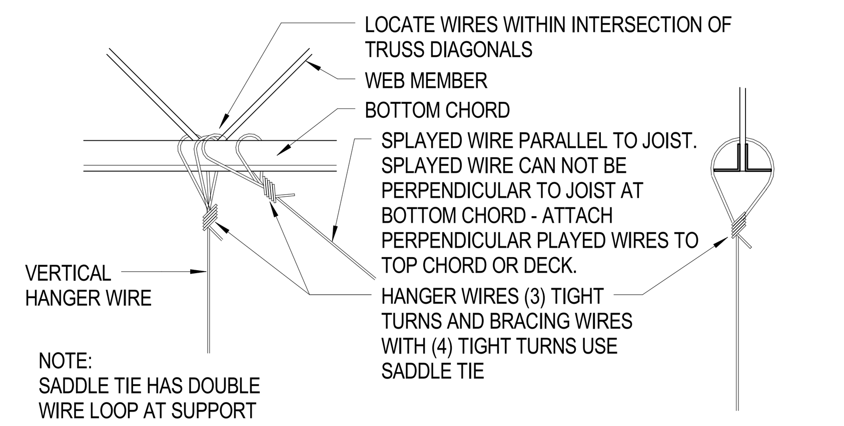

14 AT OPEN WEB MEMBER
3" = 1'-0"

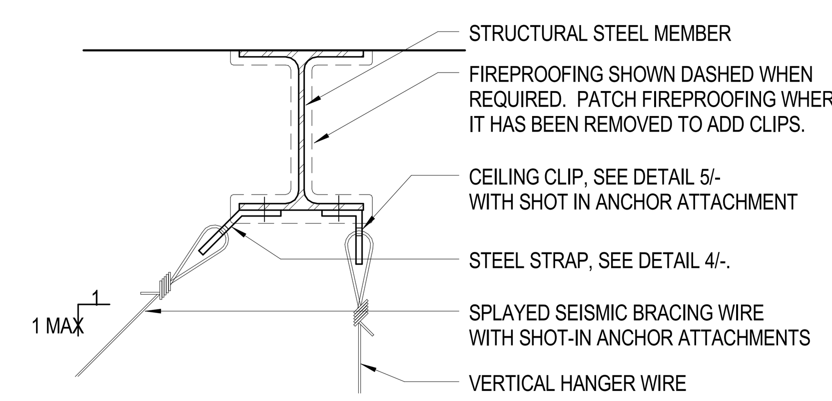

9 AT STEEL BEAMS
3" = 1'-0"

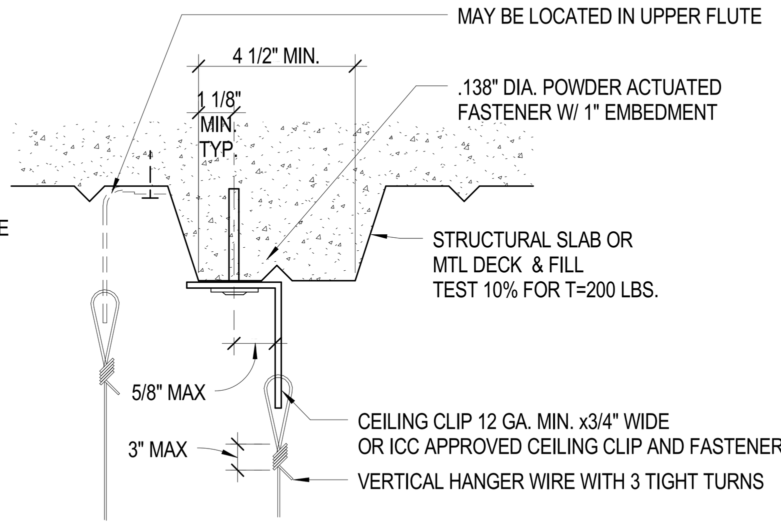

5 VERTICAL HANGER WIRE ATTACHMENT
3" = 1'-0"

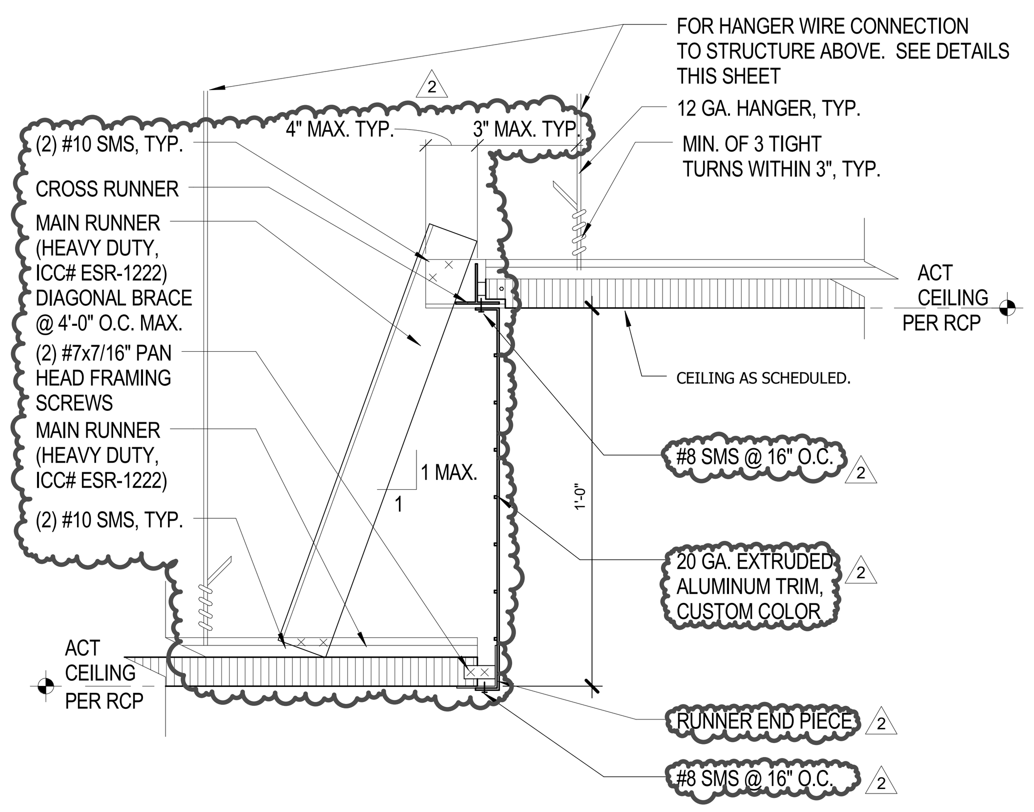

17 TYPICAL STEPPED SOFFIT WITH METAL TRIM
3" = 1'-0"

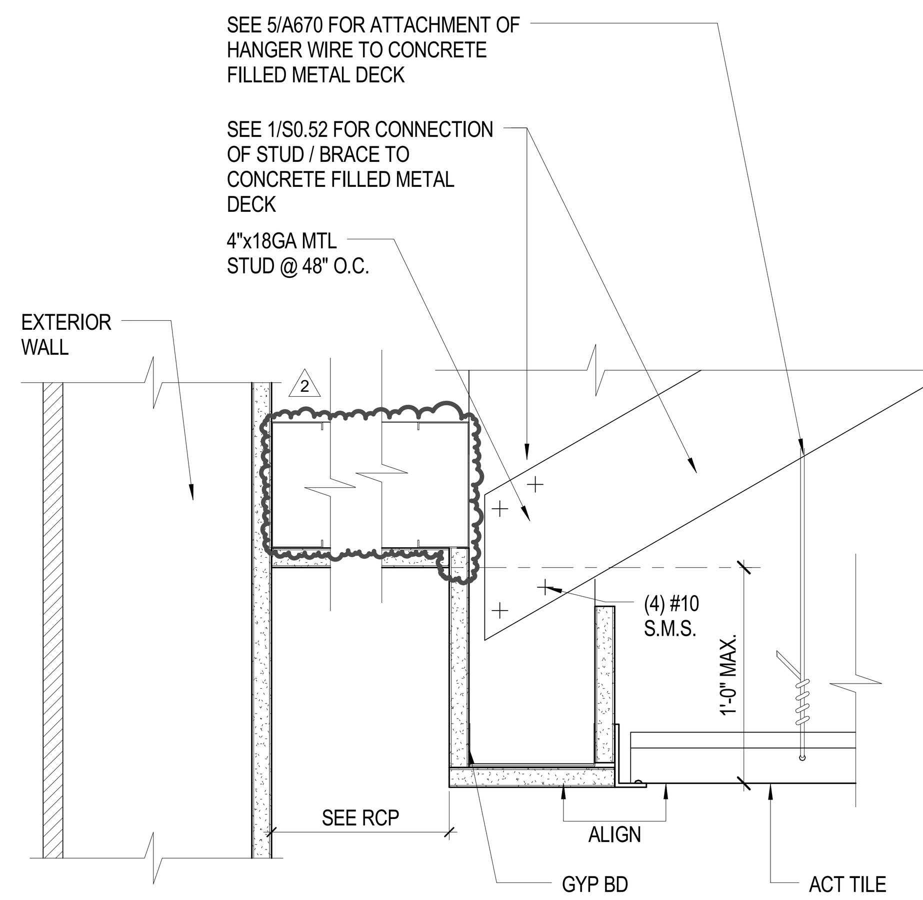

13 BULKHEAD AT EXTERIOR SOFFIT
3" = 1'-0"

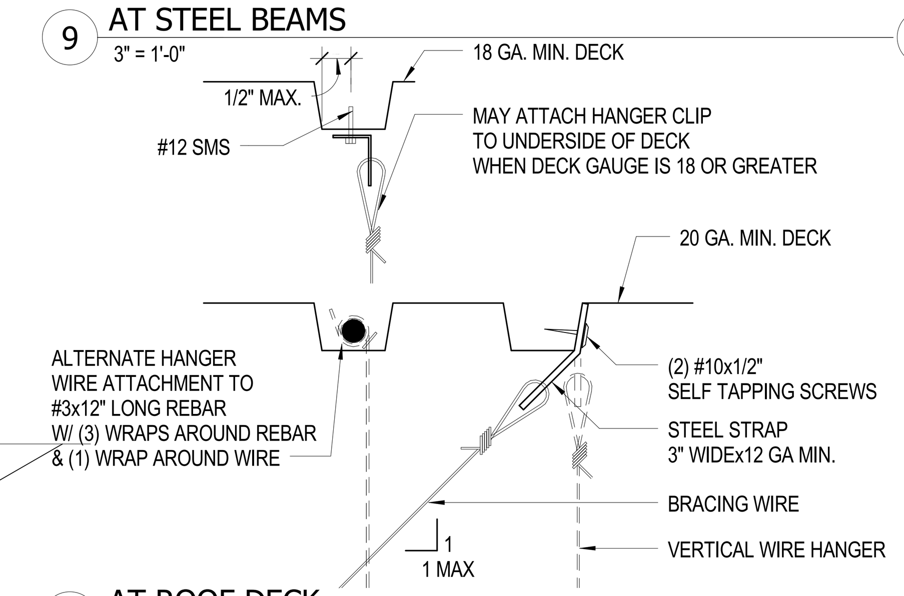

8 AT ROOF DECK
3" = 1'-0"

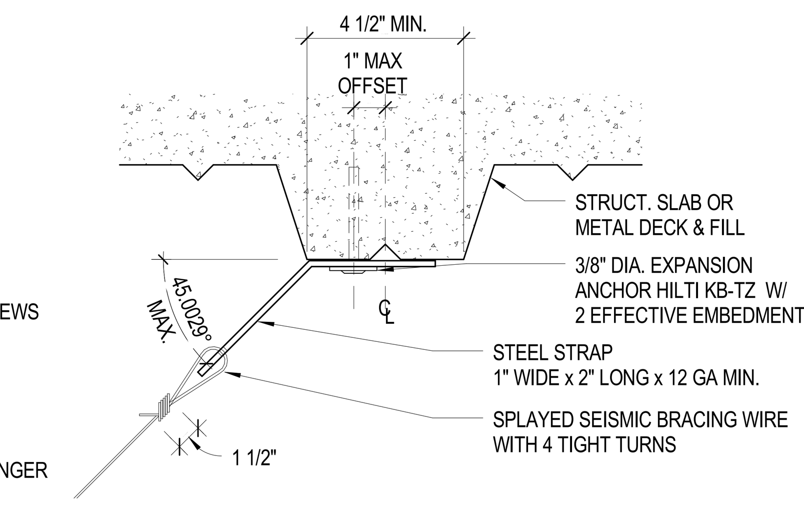

4 SPLAYED SEISMIC BRACING
3" = 1'-0"

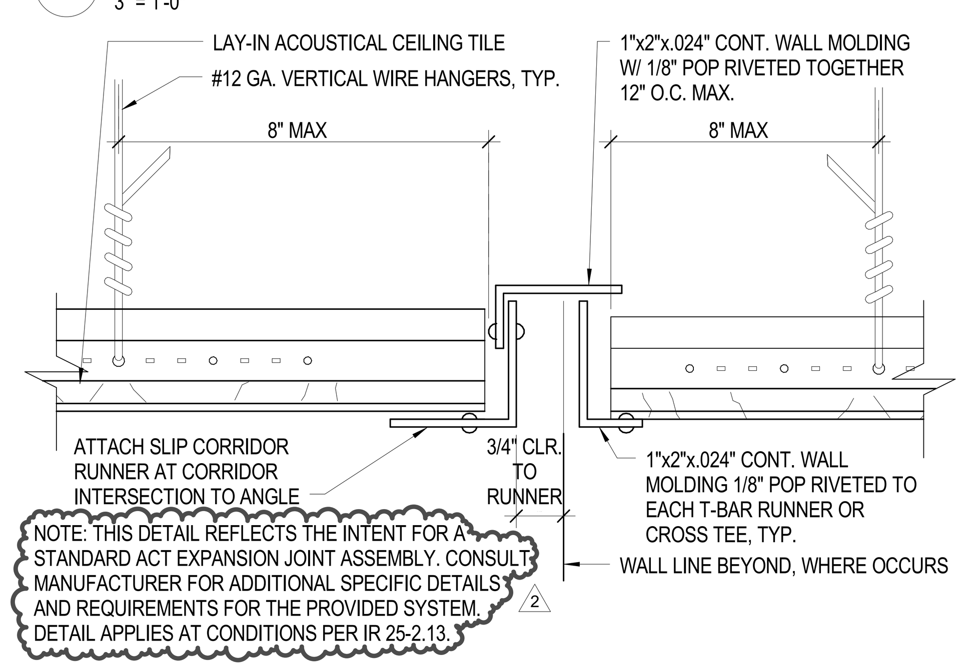

16 EXP. JOINT AT SUSP. CEILING
6" = 1'-0"

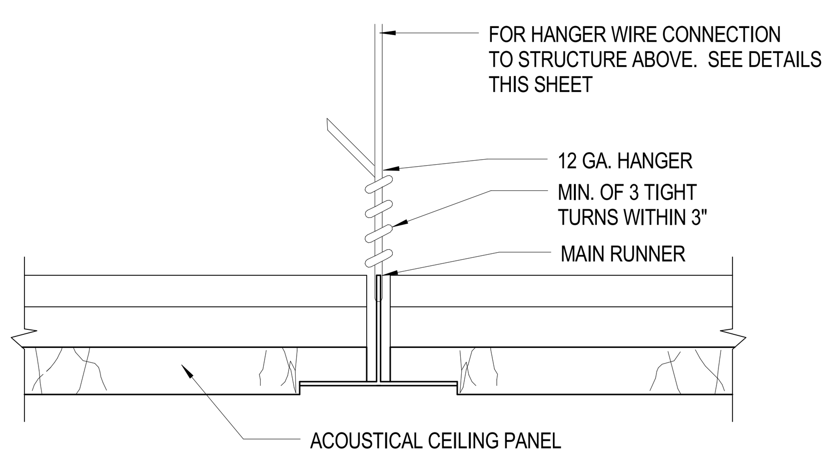

12 HANGER WIRE CONNECTION TO GRID
6" = 1'-0"

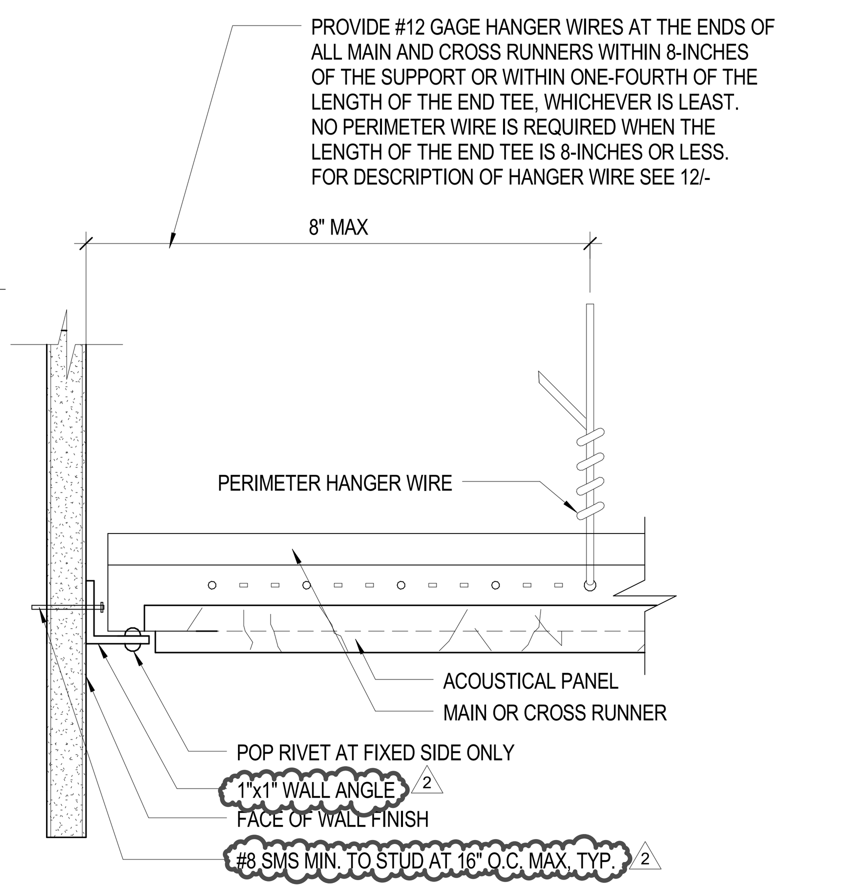

7 ACT FIX-END WALL ATTACHMENT
6" = 1'-0"

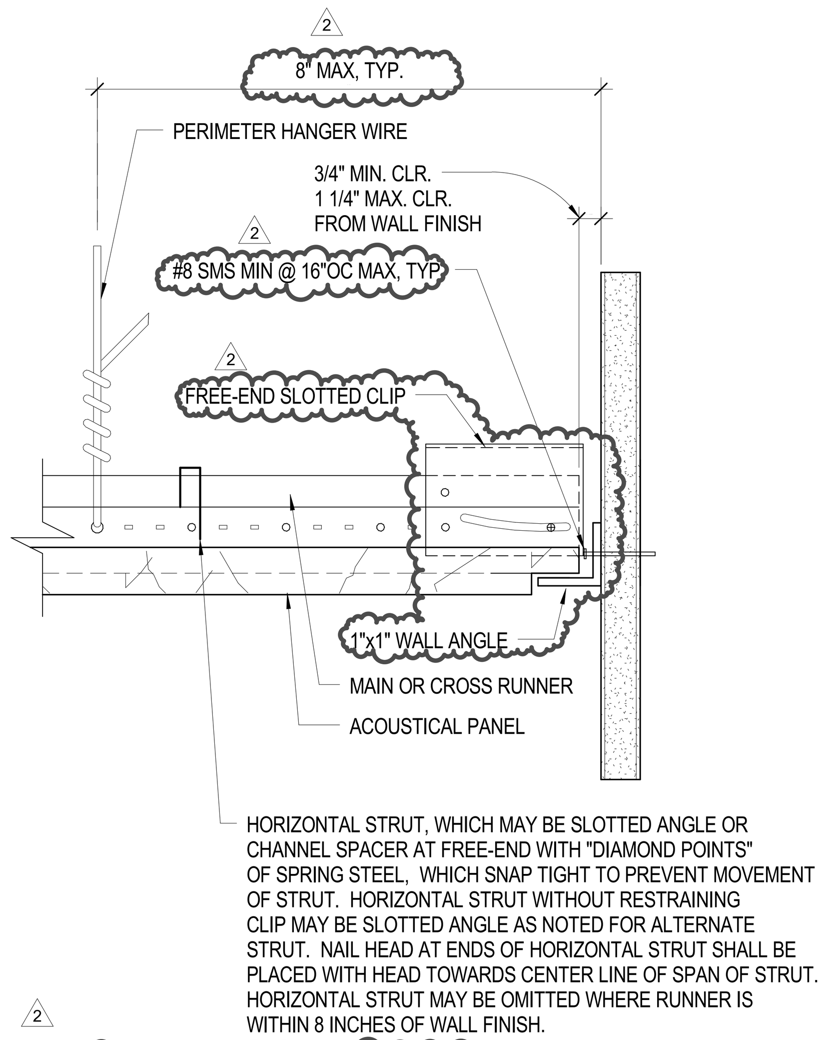

3 ACT FREE-END WALL ATTACHMENT
6" = 1'-0"

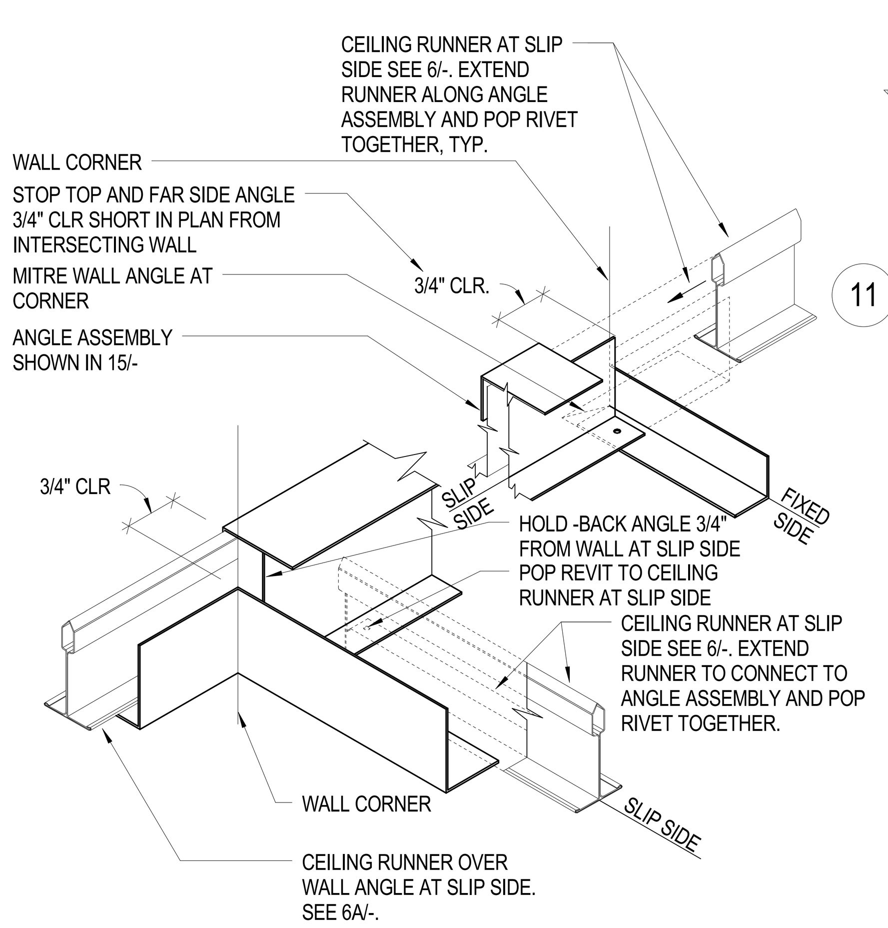

15 ISOMETRIC OF ANGLE ASSEMBLY AT EXP. JT.
3" = 1'-0"

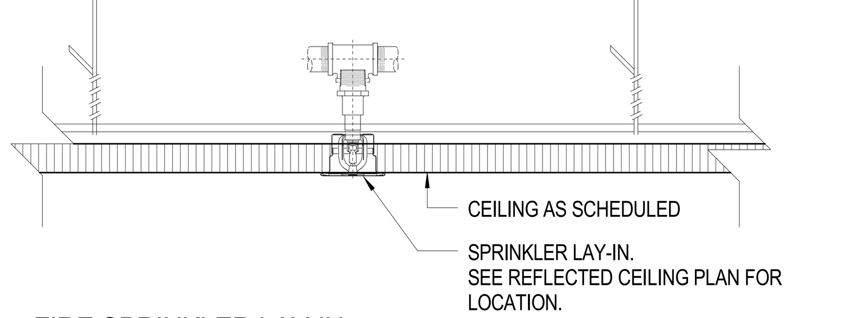

11 FIRE SPRINKLER LAY-IN
3" = 1'-0"

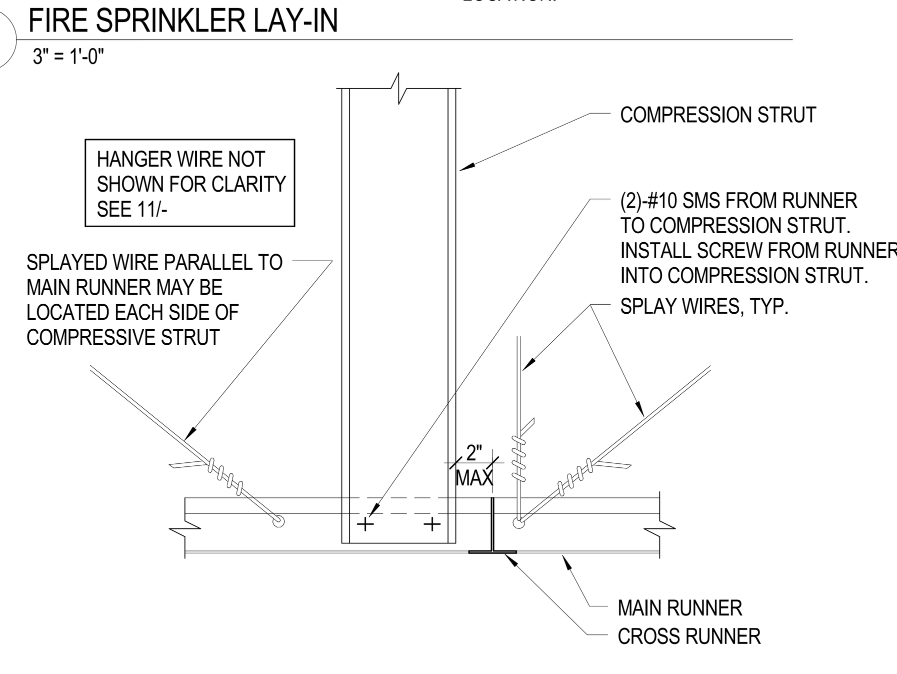

10 COMPRESSION STRUT CONNECTION TO GRID
3" = 1'-0"

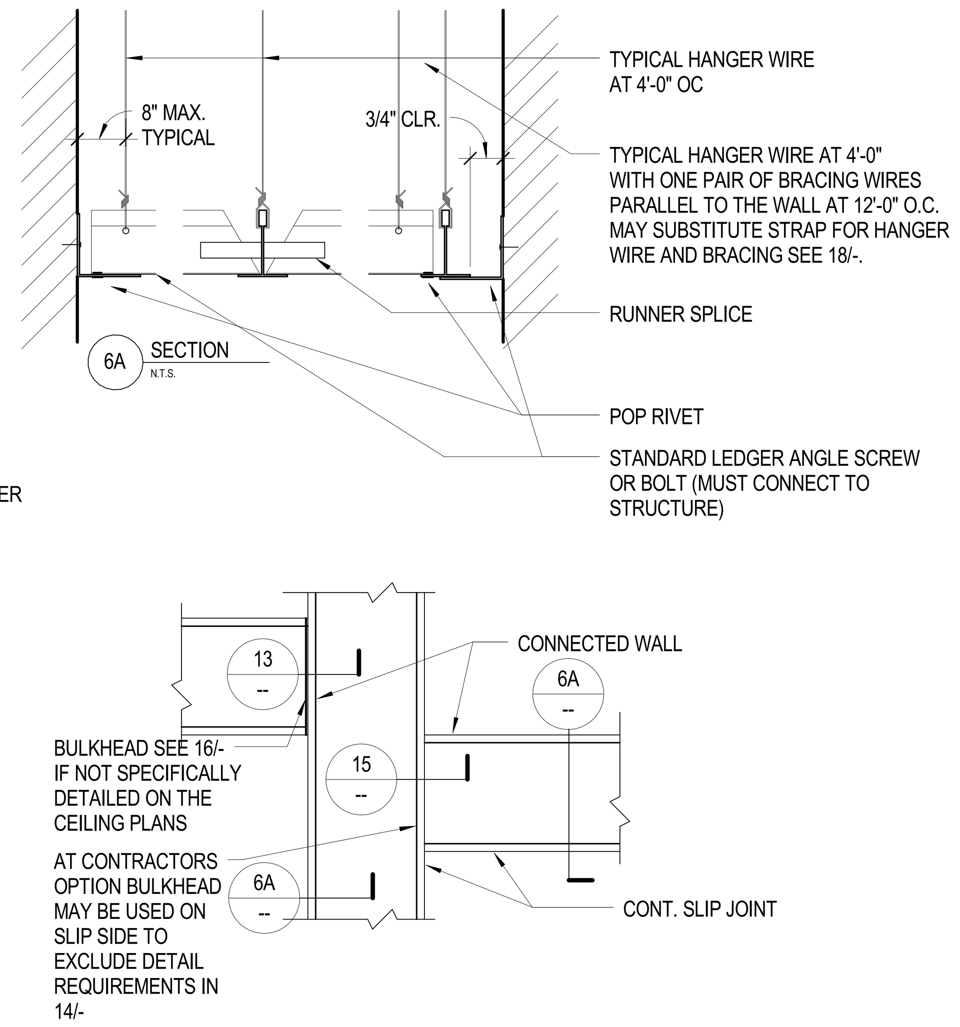

6 PLAN - ACCEPTABLE EXIT WAY DETAIL
3" = 1'-0"

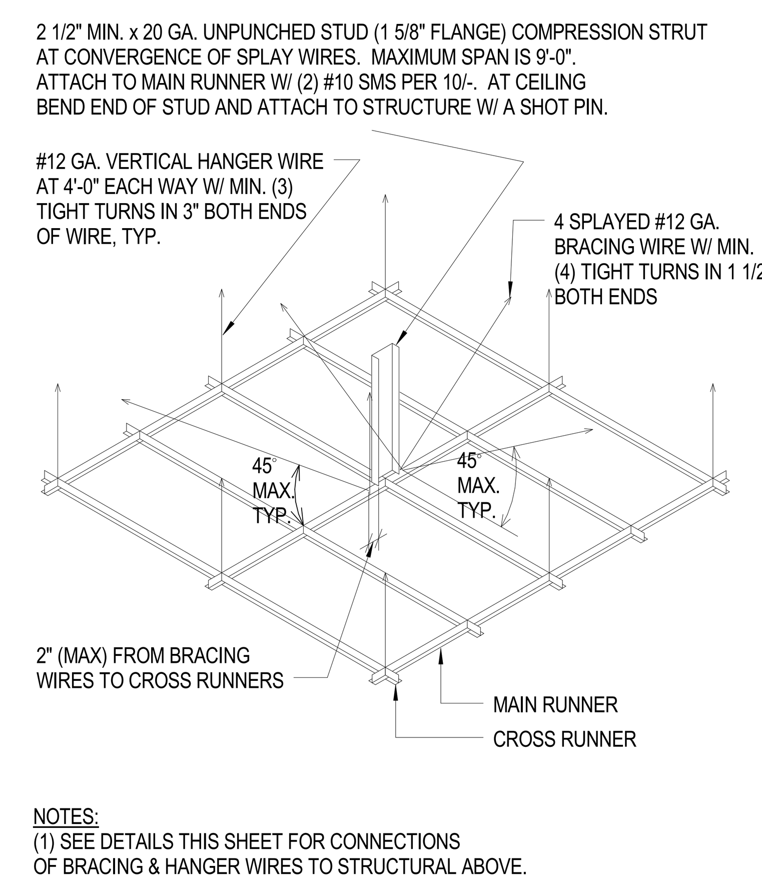

2 BRACING AT ACOUSTICAL CEILING
3" = 1'-0"

1. CEILING SYSTEM GENERAL NOTES:
1.01 Ceiling system components shall comply with ASTM C635-07 and Section 5.1 of ASTM E580-10a.
1.02 The ceiling grid system must be rated heavy duty as defined by ASTM C635-08.
1.03 Ceiling systems. The following ceiling system(s) is/are part of the scope of this project: [For each system used, the RDP shall indicate in the construction documents, the information that follows] Manufacturer's Name _____________ __. Product Evaluation Report Type and Number _________________. Manufacturer's Model Number -main runner ______________ __ . Manufacturer's catalog number -cross runner ________________ . Please see sheet A671 for ceiling system product information.
1.04 Seismic Wall Clip: [RDP to specify if used] Manufacturer's Model ____________ __ . See note above.
1.05 Ceiling panels shall not support any light fixtures, air terminals or devices.
1.06 For ceiling installations utilizing acoustical tile panels of mineral or glass fiber, it is not mandatory to provide ¾" clearance between the acoustical tile panels and the wall on the sides of the ceiling which are free to slip. For all other ceiling panel types, provide ¾" clearance between the ceiling panel and the wall on the sides of the ceiling free to slip.

Please see sheet A671 for specific information on different ceiling systems.

2. MATERIALS:
2.01 Ceiling wire shall be Class 1 zinc coated (galvanized) carbon steel conforming to ASTM A641-09a. Wire shall be #12 gage (0.106" diameter) with soft temper and minimum tensile strength = 70 ksi.
2.02 Galvanized sheet steel (including that used for metal stud and track compression struts/post) shall conform to ASTM A653-11, or other equivalent sheet steel listed in Section A2.1 of the North American Specification for the Design of Cold-Formed Steel Structural Members 2007, including supplement 2 dated 2010 (AISI S100-07/S2-10). Material 43 mil (18 gage) and lighter shall have minimum yield strength of 33 ksi. Material 54 mil (16 gage) and heavier shall have a minimum yield strength of 50 ksi.
2.03 Electrical metallic tube (EMT) shall be ANSI C80.3/UL 797 carbon steel with G90 galvanizing. EMT shall have minimum yield strength (Fy) of 30 ksi and minimum ultimate strength (Fu) of 48 ksi.
Members 2007, including supplement 2 dated 2010 (AISI S100-07/S2-10). Material 43 mil (18 gage) and lighter shall have minimum yield strength of 33 ksi. Material 54 mil (16 gage) and heavier shall have a minimum yield strength of 50 ksi. 2.03 Electrical metallic tube (EMT) shall be ANSI C80.3/UL 797 carbon steel with G90 galvanizing. EMT shall have minimum yield strength (Fy) of 30 ksi and minimum ultimate strength (Fu) of 48 ksi.

3. ATTACHMENT OF HANGER AND BRACING WIRES:
3.01 Separate all ceiling hanger and bracing wires at least six (6) inches from all unbraced ducts, pipes, conduit, etc.
3.02 Hanger and bracing wires shall not attach to or bend around obstructions including but not limited to: piping, ductwork, conduit and equipment.
3.03 Hanger wires that are more than one (horizontal) in six (vertical) out of plumb shall have counter-sloping wires.
3.04 Slack safety wires shall be considered hanger wires for installation and testing requirements.
3.05 Hanger and bracing wire anchorage to the structure shall be installed in such a manner that the direction of the anchorage aligns closely with the direction of the wire. (e.g. bracing wire ceiling clips must be bent as shown in the details and rotated as required to align closely with the direction of the wire, screw eyes in wood must be installed so they align closely with the direction of the wire, etc.)

4. FASTENERS AND WELDING:
4.01 Sheet metal screws shall comply with ASTM C1513-10, ASME B18.6.4-89 (R2005). Penetration of screws through joined material shall not be less than three exposed threads.
4.02 Expansion anchors shall be: [RDP to indicate manufacturer, product, evaluation report number and load for each size specified per CBC 1913A.7.2.]
4.03 Power-Actuated Fasteners shall be: [RDP to indicate manufacturer, product, evaluation report number] 4.04 If not otherwise specified in the evaluation report, power-actuated fasteners installed in steel shall be installed so the entire pointed end of the fastener is driven through the steel member.
4.05 Power-actuated fasteners in concrete are not permitted for bracing wires.
4.06 Concrete reinforcement and prestressing tendons shall be located by non-destructive means prior to installing post - installed anchor.
4.07 Welding shall be in accordance with AWS D1.3 using E60XX series electrodes.

5. TESTING: All field testing must be performed in the presence of the project inspector.
5.01 Post-installed anchors in concrete used to support hanger wires shall be tested at a frequency of 10 percent. Power actuated fasteners in concrete shall be field tested for 200 lbs. in tension. All other post-installed anchors in concrete shall be tested in accordance with CBC Section 1913A.7.
5.02 Post-installed anchors in concrete used to attach bracing wires shall be tested at a frequency of 50 percent in accordance with CBC Section 1913A.7.

6. LIGHT FIXTURES:
6.01 All light fixtures shall be positively attached to the ceiling suspension systems by mechanical means to resist a horizontal force equal to the weight of the fixture. A minimum of two screws or approved fasteners are required at each light fixture, per ASTM E580, Section 5.3.1.
6.02 Surface-mounted light fixtures shall be attached to the main runner with at least two positive clamping devices. The clamping device shall completely surround the supporting ceiling runner and be made of steel with a minimum thickness of #14 gage. Rotational spring catches do not comply. A #12 gage slack safety wire shall be connected from each clamping device to the structure above. Provide additional supports when light fixtures are eight (8) feet or longer or exceed 56 lb. Maximum spacing between supports shall not exceed eight (8) feet.
6.03 Light fixtures weighing less than or equal to 10 lb. shall have a minimum of one (1) #12 gage slack safety wire connected from the fixture housing to the structure above.
6.04 Light fixtures weighing less than or equal to 10 lb. shall have a minimum of one (1) #12 gage slack safety wire connected from the fixture housing to the structure above.
6.05 Light fixtures weighing greater than 10 lb. but less than or equal to 56 lbs. may be supported directly on the ceiling runners, but they shall have a minimum of two (2) #12 gage slack safety wires connected from the fixture housing at diagonal corners to the structure above. Exception: All light fixtures greater than two by four feet weighing less than 56 lbs. shall have a #12 gage slack safety wire at each corner.
6.06 All Light fixtures weighing greater than 56 lb. shall be independently supported by not less than four (4) taut #12 gage hanger wires (one at each corner) attached from the fixture housing to the structure above or other approved hangers. The four (4) taut #12 gage wires or other approved hangers, including their attachment to the structure above, shall be capable of supporting four (4) times the weight of the fixture.

7. SERVICES WITHIN THE CEILING:
7.01 All flexible sprinkler hose fitting mounting brackets, ceiling-mounted air terminals or other services shall be positively attached to the ceiling suspension systems by mechanical means. Screws or approved fasteners are required. A minimum of two attachments are required at each component.
7.02 Ceiling-mounted air terminals or other services weighing less than or equal to 20 lb. shall have one (1) #12 gage slack safety wire attached from the terminal or service to the structure above.
7.03 Flexible sprinkler hose fittings, ceiling-mounted air terminals or other services weighing more than 20 lb. but less than or equal to 56 lb. shall have two (2) #12 gage slack safety wires (at diagonal corners) connected from the terminal or service to the structure above.
7.04 Flexible sprinkler hose fittings, ceiling-mounted air terminals or other services weighing more than 56 lb. shall be supported directly from the structure above by not less than four (4) taut #12 gage hanger wires attached from the terminal or service to the structure above or other approved hangers.

8. OTHER DEVICES WITHIN THE CEILING:
8.01 All lightweight miscellaneous devices, such as strobe lights, occupancy sensors, speakers, exit signs, etc., shall be attached to the ceiling grid. In addition, devices weighing more than 10 lbs. shall have a #12 gage slack safety wire anchored to the structure above. Devices weighing more than 20 lb. shall be supported independently from the structure above.

19 DSA IR 25-2.13 CEILING NOTES

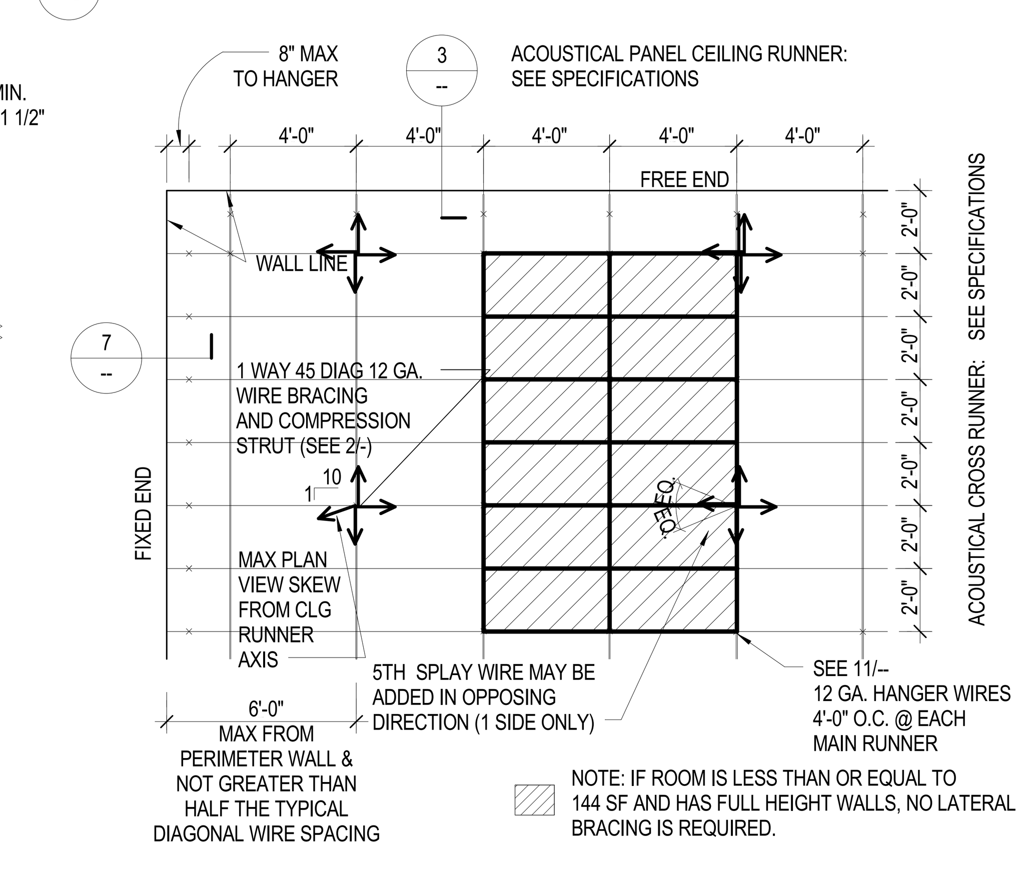

1 DIAGRAMMATIC PLAN ACOUSTICAL CEILING
3" = 1'-0"

HGA.
1918 Main Street, Third Floor
Santa Monica, California 90405
Telephone 310.557.7600

STRUCTURAL ENGINEER
SAIFUL BOUQUET
155 N LAKE AVE
PASADENA, CA 91101
626-304-2616

MECHANICAL & PLUMBING ENGINEER
STANTEC CONSULTING INC
14130 RIVERSIDE DR. # 201
SHERMAN OAKS, CA 91423
818-377-8220

ELECTRICAL ENGINEER
FBA ENGINEERING
150 PAULARINO AVE. #A120
COSTA MESA, CA 92626
949-852-9995

CIVIL ENGINEER
KPFF CONSULTING ENGINEERS
700 SOUTH FLOWER ST. #2100
LOS ANGELES, CA 90017
213-418-0201

LANDSCAPE ARCHITECT
LYNN CAPOUYA, INC.
17992 MITCHELL SOUTH, #110
IRVINE, CA 92614
949-756-0150

LABORATORY CONSULTANT
RESEARCH FACILITIES DESIGN
3965 FIFTH AVE. #400
SAN DIEGO, CA 92103
619-297-0159

SCIENCE CENTER
SANTA ANA COLLEGE
RANCHO SANTIAGO COMMUNITY COLLEGE DISTRICT
1530 W. 17TH ST.
SANTA ANA, CA 92706

SANTA ANA COLLEGE

I HEREBY CERTIFY THAT THIS PLAN, SPECIFICATION OR REPORT WAS PREPARED BY ME OR UNDER MY DIRECT SUPERVISION AND THAT I AM A DULY LICENSED ARCHITECT UNDER THE LAWS OF THE STATE OF CA.

LICENSED ARCHITECT JAMES G. MATSON C13036 SEPTEMBER 30, 2019 RENEWAL DATE STATE OF CALIFORNIA

NAME: JAMES G. MATSON
DATE: MAY 16, 2017
REGISTRATION NUMBER: C13036

NO	DESCRIPTION	DATE
2	Addendum 2	9/1/17

ISSUANCE HISTORY - THIS SHEET

DRAWN BY: SK REVIEW BY: TE

HGA NO: 3584-001-00

TYPICAL ACOUSTICAL CEILING NOTES AND DETAILS

DATE: JULY 06, 2017

A670

ADDENDA PACKAGE

© COPYRIGHT HAMMEL, GREEN AND ABRAHAMSON, INC.

9/1/2017 3:00:17 PM C:\Users\lsstacyk\Documents\Revit Local Files\A16-3584-001-00_SAC SC_lsstacyk.rvt SK

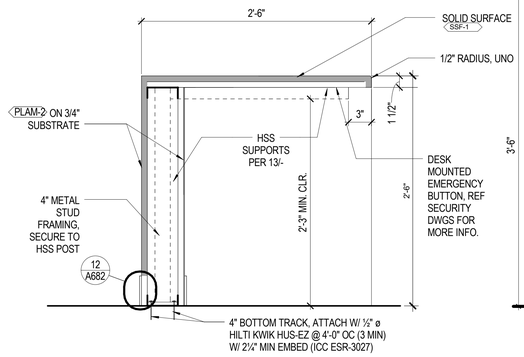

16 RECEPTION DESK COUNTER DETAIL WITH BRACKET
1 1/2" = 1'-0"

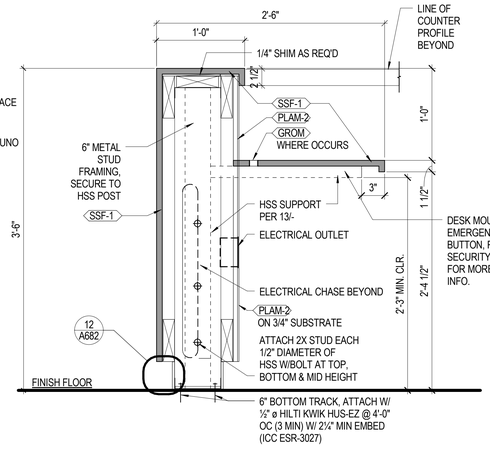

15 RECEPTION COUNTER
1 1/2" = 1'-0"

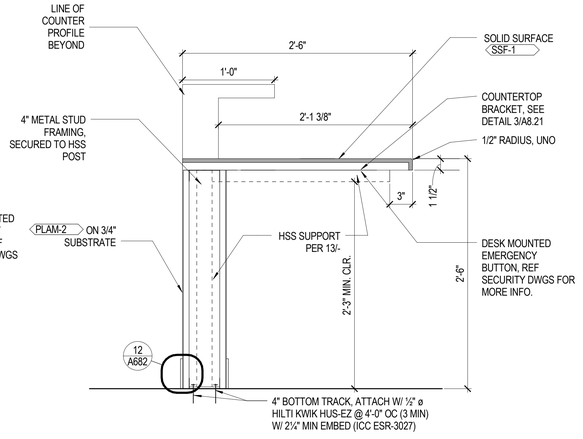

14 RECEPTION COUNTER (ACCESSIBLE)
1 1/2" = 1'-0"

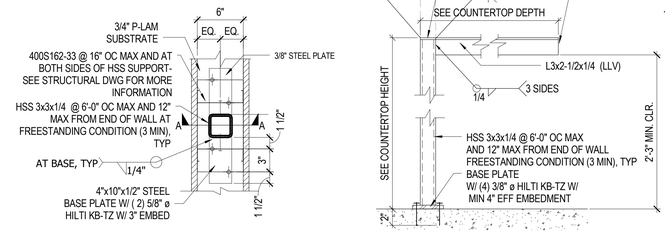

13 HSS @ RECEPTION DESK COUNTER
1 1/2" = 1'-0"

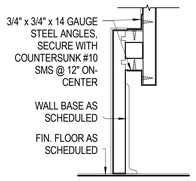

12 CASEWORK INTEGRATED TOE KICK
3" = 1'-0"

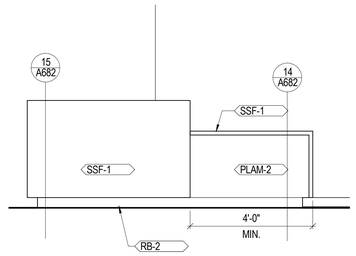

11 RECEPTION DESK SC103 - WEST ELEVATION
1/2" = 1'-0"

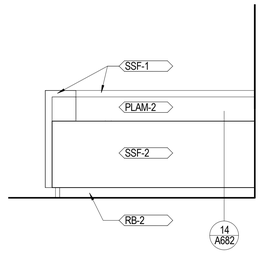

10 RECEPTION DESK SC103 - SOUTH ELEVATION
1/2" = 1'-0"

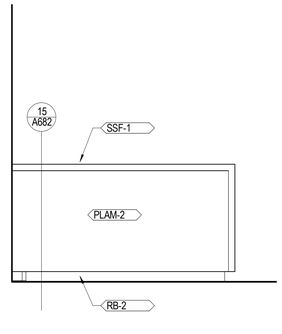

9 RECEPTION DESK SC103 - NORTH ELEVATION
1/2" = 1'-0"

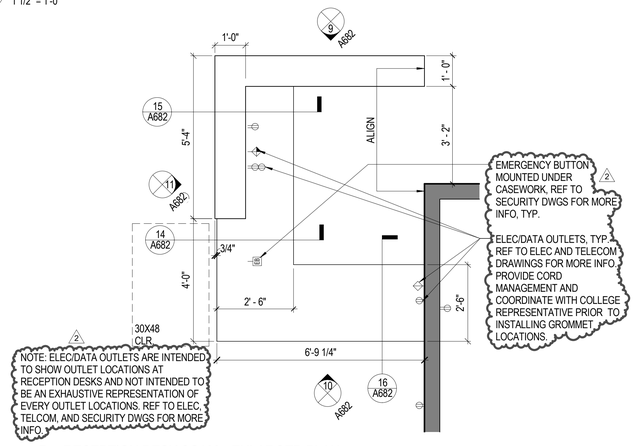

8 RECEPTION DESK SC103 - ENLARGED PLAN
1/2" = 1'-0"

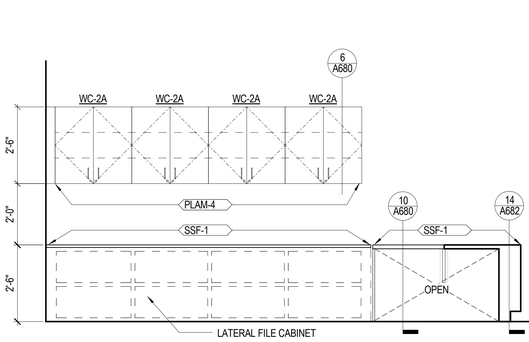

7 RECEPTION DESKS SC116 - WEST ELEVATION
1/2" = 1'-0"

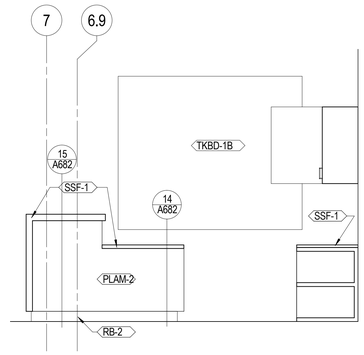

6 RECEPTION DESKS SC116 - SOUTH ELEVATION
1/2" = 1'-0"

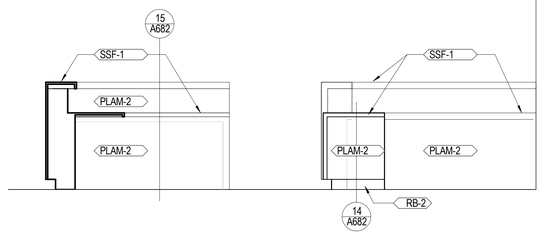

5 RECEPTION DESKS SC116 - EAST ELEVATION
1/2" = 1'-0"

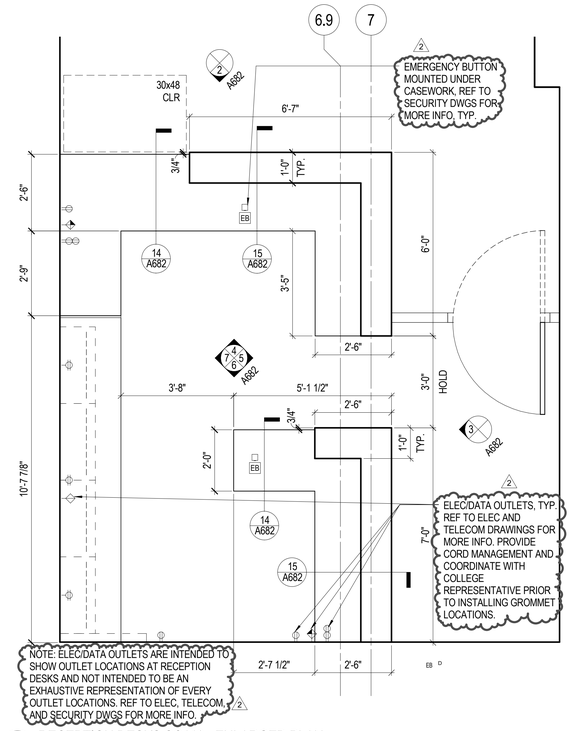

1 RECEPTION DESKS SC116 - ENLARGED PLAN
1/2" = 1'-0"

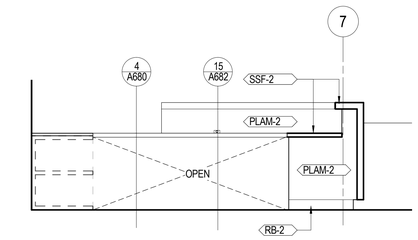

4 FIRST FLOOR - RECEPTION SC116 - NORTH ELEVATION
1/2" = 1'-0"

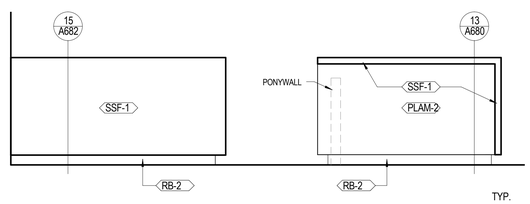

3 RECEPTION DESKS SC116- WEST ELEVATION
1/2" = 1'-0"

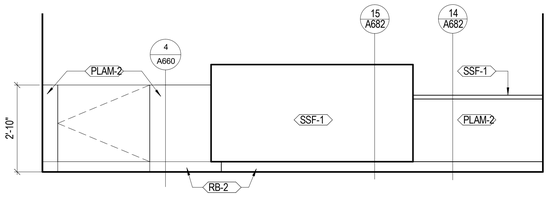

2 RECEPTION DESKS SC116 - NORTH ELEVATION
1/2" = 1'-0"

hGA.
1918 Main Street, Third Floor
Santa Monica, California 90405
Telephone 310.557.7600

STRUCTURAL ENGINEER
SAIFUL BOUQUET
155 N LAKE AVE
PASADENA, CA 91101
626-304-2616

MECHANICAL & PLUMBING ENGINEER
STANTEC CONSULTING INC
14130 RIVERSIDE DR. # 201
SHERMAN OAKS, CA 91423
818-377-8220

ELECTRICAL ENGINEER
FBA ENGINEERING
150 PAULARINO AVE. #A120
COSTA MESA, CA 92626
949-852-9995

CIVIL ENGINEER
KPFF CONSULTING ENGINEERS
700 SOUTH FLOWER ST. #2100
LOS ANGELES, CA 90017
213-418-0201

LANDSCAPE ARCHITECT
LYNN CAPOUYA, INC.
17992 MITCHELL SOUTH, #110
IRVINE, CA 92614
949-756-0150

LABORATORY CONSULTANT
RESEARCH FACILITIES DESIGN
3965 FIFTH AVE. #400
SAN DIEGO, CA 92103
619-297-0159

SCIENCE CENTER
SANTA ANA COLLEGE
RANCHO SANTIAGO COMMUNITY COLLEGE DISTRICT
1530 W. 17TH ST.
SANTA ANA, CA 92706

SANTA ANA COLLEGE

I HEREBY CERTIFY THAT THIS PLAN, SPECIFICATION OR REPORT WAS PREPARED BY ME OR UNDER MY DIRECT SUPERVISION AND THAT I AM A DULY LICENSED ARCHITECT UNDER THE LAWS OF THE STATE OF CALIFORNIA

LICENSED ARCHITECT JAMES G. MATSON No. C13036 REGISTERED PROFESSIONAL ENGINEER SEPTEMBER 30, 2019 RENEWAL DATE STATE OF CALIFORNIA

NAME: JAMES G. MATSON
DATE: MAY 16, 2017
REGISTRATION NUMBER: C13036

NO	DESCRIPTION	DATE
2	Addendum 2	9/1/17

ISSUANCE HISTORY - THIS SHEET

DRAWN BY: MS | REVIEW BY: Approver

HGA NO: 3584-001-00

CASEWORK AND RECEPTION DESKS DETAILS

DATE: JULY 06, 2017

A682 ADDENDA PACKAGE

© COPYRIGHT HAMMEL, GREEN AND ABRAHAMSON, INC.

C:\Users\kstasik\Documents\Revit Local Files\A16-3584-001-09_SAC-SC_kstasik.rvt
9/1/2017 3:00:29 PM
MS

Symbol Legend

X.XX.X

- Level / Floor
- Sign No.
- Sign Type

Sign Legend

S1	Accessible Parking Stall Sign	5
S2	Van Accessible Parking Stall Sign	1
S3	Fire Lane Access Sign	2
S3A	Fire Lane Sign	6
S4	(Not Used)	0
S5	Exit / Do Not Enter Sign	1
S6	Accessible Directional Sign	12
S7	No Parking / Passenger Drop-off	1
S7A	ADA Passenger Drop-off	1
S8	Carpool Parking Only	3
S9	Clean Air Vehicle Parking Only	3
S10	Generator Sign	1
S11	(Not Used)	1
S12	Campus Directional Sign	TBD

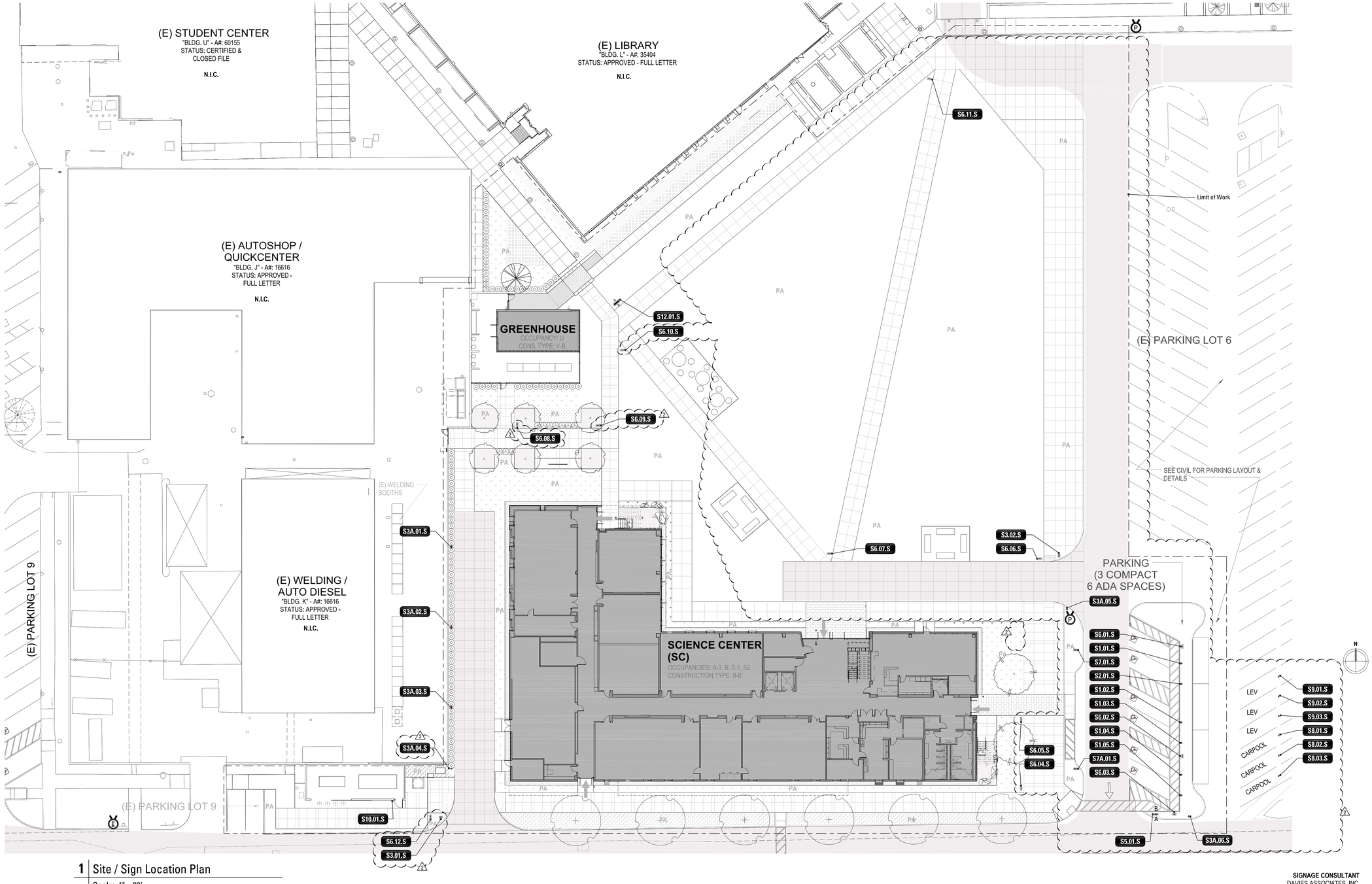

1 Site / Sign Location Plan
Scale: 1" = 20'

hga.
1918 Main Street, Third Floor
Santa Monica , California 90405
Telephone 310.557.7600

STRUCTURAL ENGINEER
SAIFUL BOUQUET
155 N LAKE AVE
PASADENA, CA 91101
626-304-2616

MECHANICAL & PLUMBING ENGINEER
STANTEC CONSULTING INC
14130 RIVERSIDE DR. # 201
SHERMAN OAKS, CA 91423
818-377-8220

ELECTRICAL ENGINEER
FBA ENGINEERING
150 PAULARINO AVE. #A120
COSTA MESA, CA 92626
949-852-9995

CIVIL ENGINEER
KPFF CONSULTING ENGINEERS
700 SOUTH FLOWER ST. #2100
LOS ANGELES, CA 90017
213-418-0201

LANDSCAPE ARCHITECT
LYNN CAPOUYA, INC.
17992 MITCHELL SOUTH, #110
IRVINE, CA 92614
949-756-0150

LABORATORY CONSULTANT
RESEARCH FACILITIES DESIGN
3965 FIFTH AVE, #400
SAN DIEGO, CA 92103
619-297-0159

SCIENCE CENTER
SANTA ANA COLLEGE

RANCHO SANTIAGO COMMUNITY COLLEGE DISTRICT

1530 W. 17TH ST.
SANTA ANA, CA 92706

SANTA ANA COLLEGE

I HEREBY CERTIFY THAT THIS PLAN, SPECIFICATION OR REPORT WAS PREPARED BY ME, OR UNDER MY DIRECT SUPERVISION AND THAT I AM A DULY LICENSED ARCHITECT UNDER THE LAWS OF THE STATE OF CA

LICENSED ARCHITECT JAMES G. MATHIS No. 26000 REGISTERED PROFESSIONAL ENGINEER STATE OF CALIFORNIA
SEPTEMBER 30, 2017 RENEWAL 08.31.2017

NAME: NOEL DAVIES
DATE: JULY 06, 2017
REGISTRATION NUMBER: N/A

NO	DESCRIPTION	DATE
2	Addendum 2	9/01/17

ISSUANCE HISTORY - THIS SHEET

DRAWN BY: BD / LN | REVIEW BY: ND

HGA NO: 3584-001-00

SITE / SIGN LOCATION PLAN

DATE: JULY 06, 2017

GS.01

ADDENDA PACKAGE

SIGNAGE CONSULTANT
DAVIES ASSOCIATES, INC.
9424 DAYTON WAY, #217
BEVERLY HILLS, CA 90210
310-247-9572

©COPYRIGHT HAMMEL, GREEN AND ABRAHAMSON, INC.

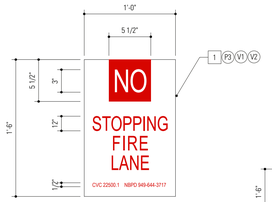

4 PARTIAL SIGN ELEVATION/COPY DETAIL
SCALE: 1 1/2" = 1'-0"

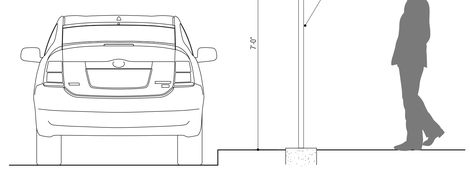

1 ELEVATION - SIGN TYPE 3A - NO STOPPING FIRE LANE SIGN - POST MOUNTED
SCALE: 1/2" = 1'-0"

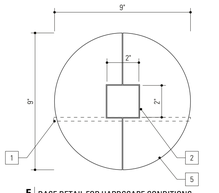

5 BASE DETAIL FOR HARDSCAPE CONDITIONS
SCALE: 3" = 1'-0"

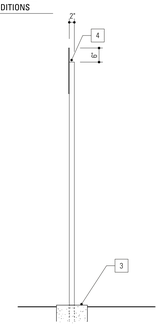

2 SIDE VIEW - LANDSCAPE CONDITION
SCALE: 1/2" = 1'-0"

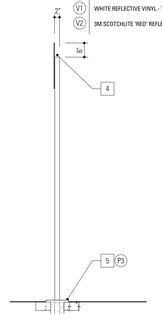

3 SIDE VIEW - HARDSCAPE CONDITION
SCALE: 1/2" = 1'-0"

NOTES SAC_ST3A_Fnd.ane.ai

1. 3/16" THK. ALUMINUM SIGN PANEL WITH PAINT FINISH AND APPLIED VINYL GRAPHICS WITH MATTHEWS SATIN CLEAR OVERCOAT. BACK AND SIDES OF PANEL TO BE PAINTED TO MATCH POST. SIGN PANEL TO BE ADHERED TO POST WITH LORDS ADHESIVE.
2. 2" SHARP CORNER SQUARE ALUMINUM TUBE WITH PAINT FINISH. TUBE WALL THICKNESS TO BE MINIMUM .125" THK. CORNERS TO BE SLIGHTLY EASED TO ENSURE PAINT ADHESION.
3. CONCRETE FOOTING AS REQUIRED BY SIGN CONTRACTORS STRUCTURAL ENGINEERING CALCULATIONS. CONCRETE COLOR AND FINISH TO MATCH PROJECT STANDARDS.
4. CLOSED POST CAP WITH PAINT FINISH TO MATCH POST.
5. 3/8" THK. ALUMINUM X 9" DIAM. ROUND BEAUTY PLATE IN 2 SECTIONS TO FIT AROUND POST. PLATE TO BE EPOXIED TO HARDSCAPE.

COLORS

- P3 WHITE PAINT FINISH (TBD)
- V1 WHITE REFLECTIVE VINYL - TBD
- V2 3M SCOTCHLITE 'RED' REFLECTIVE VINYL FILM NO. 680-72

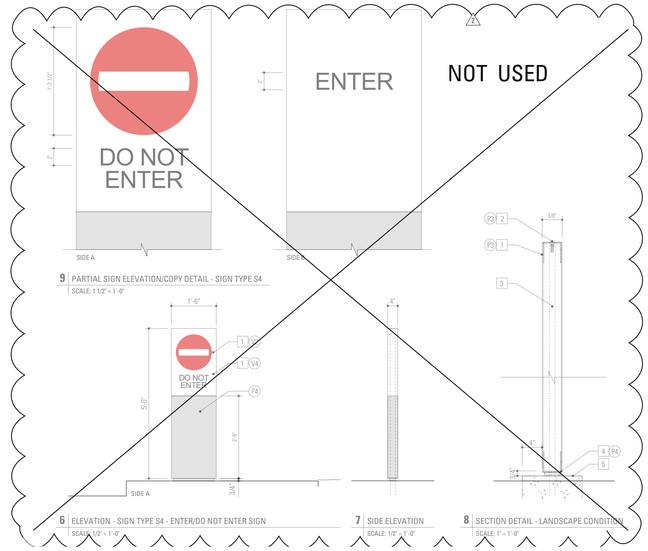

9 PARTIAL SIGN ELEVATION/COPY DETAIL - SIGN TYPE S4
SCALE: 1 1/2" = 1'-0"

6 ELEVATION - SIGN TYPE S4 - ENTER/DO NOT ENTER SIGN
SCALE: 1/2" = 1'-0"

7 SIDE ELEVATION
SCALE: 1/2" = 1'-0"

8 SECTION DETAIL - LANDSCAPE CONDITION
SCALE: 1" = 1'-0"

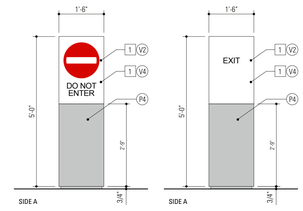

10 ELEVATION - SIGN TYPE S5 - DO NOT ENTER / EXIT SIGN
SCALE: 1/2" = 1'-0"

NOTES SDC_ST11_DoNotEnter.ai

1. .125" THICK FABRICATED ALUMINUM CABINET WITH INTERNAL STRUCTURAL FRAMING AND PAINT FINISH. APPLIED VINYL GRAPHICS WITH MATTHEWS CLEAR ACRYLIC POLYURETHANE FINISH COAT. WELD, GRIND AND SAND SMOOTH ALL EXPOSED JOINTS PRIOR TO PAINTING.
2. FLUSH/COUNTERSUNK SCREWS PAINTED TO MATCH SURROUNDING METAL.
3. INTERNAL STRUCTURAL VERTICAL SUPPORT AND/OR STRUCTURAL FRAMING AS REQUIRED BY SIGN CONTRACTORS STRUCTURAL ENGINEERING CALCULATIONS.
4. 3/4" HIGH BASE REVEAL
5. 4" COUNTINUOUS CONCRETE MOW STRIP WITH EASED EDGES. COLOR AND FINISH OF CONCRETE TO MATCH PROJECT STANDARDS.

- P2 COLOR TBD
- P4 COLOR (TBD)
- V2 3M SCOTCHLITE 'RED' REFLECTIVE VINYL FILM NO. 680-72
- V4 3M SCOTCHLITE 'BLACK' REFLECTIVE VINYL FILM NO. 180C-12

NOTES SAC_ST3A_Aa3Dr.ai

1. .125 THK. FABRICATED ALUMINUM SIGN CABINET WITH PAINT FINISH WELD, GRIND, FILL AND SAND SMOOTH ALL JOINTS PRIOR TO PAINTING.
2. BLACK VINYL GRAPHICS APPLIED TO SIGN FACE WITH MATTHEWS CLEAR ACRYLIC POLYURETHANE FINISH COAT.
3. 4" COUNTINUOUS CONCRETE MOW STRIP WITH EASED EDGES. COLOR AND FINISH OF CONCRETE TO MATCH PROJECT STANDARDS.
4. FLUSH/COUNTERSUNK SCREWS PAINTED TO MATCH SURROUNDING METAL.
5. INTERNAL STRUCTURAL VERTICAL SUPPORT AND/OR STRUCTURAL FRAMING AS REQUIRED.
6. 3/4" HIGH BASE REVEAL

- P3 COLOR TBD
- V4 3M SCOTCHLITE 'BLACK' REFLECTIVE VINYL FILM NO. 180C-12

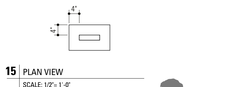

15 PLAN VIEW
SCALE: 1/2" = 1'-0"

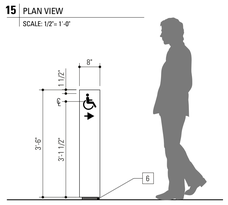

11 ELEVATION - SIGN TYPE S6 - ACCESSIBLE DIRECTIONAL
SCALE: 1/2" = 1'-0"

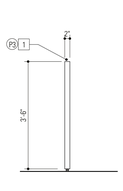

12 SIDE ELEVATION
SCALE: 1/2" = 1'-0"

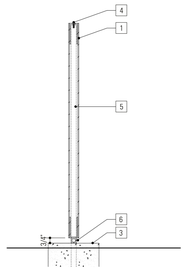

13 SECTION DETAIL - LANDSCAPE CONDITION
SCALE: 1" = 1'-0"

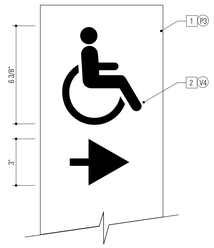

14 DETAIL
SCALE: 3" = 1'-0"

19 PARTIAL SIGN ELEVATION/COPY DETAIL
SCALE: 1 1/2" = 1'-0"

20 SIGN TYPE S7A - ADA DROP-OFF SIGN
SCALE: 1 1/2" = 1'-0"

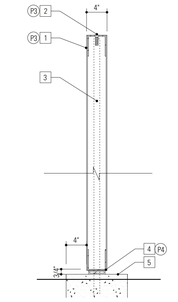

18 SECTION DETAIL - LANDSCAPE CONDITION
SCALE: 1" = 1'-0"

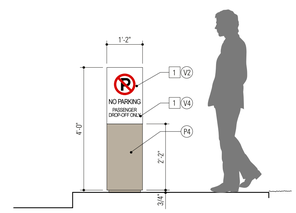

16 ELEVATION - SIGN TYPE S7 - PASSENGER DROP OFF ONLY
SCALE: 1/2" = 1'-0"

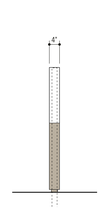

17 SIDE ELEVATION
SCALE: 1/2" = 1'-0"

NOTES SDC_ST11_PostDropoff.ai

1. .125" THICK FABRICATED ALUMINUM CABINET WITH INTERNAL STRUCTURAL FRAMING AND PAINT FINISH. APPLIED VINYL GRAPHICS WITH MATTHEWS CLEAR ACRYLIC POLYURETHANE FINISH COAT. WELD, GRIND AND SAND SMOOTH ALL EXPOSED JOINTS PRIOR TO PAINTING.
2. FLUSH/COUNTERSUNK SCREWS PAINTED TO MATCH SURROUNDING METAL.
3. INTERNAL STRUCTURAL VERTICAL SUPPORT AND/OR STRUCTURAL FRAMING AS REQUIRED BY SIGN CONTRACTORS STRUCTURAL ENGINEERING CALCULATIONS.
4. 3/4" HIGH BASE REVEAL.
5. 4" COUNTINUOUS CONCRETE MOW STRIP WITH EASED EDGES. COLOR AND FINISH OF CONCRETE TO MATCH PROJECT STANDARDS.
6. 1/4" THK. ALUMINUM PANEL WITH PAINT FINISH. PANEL TO BE FLUSH MOUNTED TO WALL WITH VHB TAPE AND SILICONE ADHESIVE SUITABLE FOR EXTERIOR APPLICATIONS.

- P2 MATTHEWS PAINT TO MATCH BENJAMIN MOORE BM0C-31 'FOG MIST' - SATIN FINISH
- P4 MATTHEWS PAINT TO MATCH DURANAR UCS763XL 'BRIGHT SILVER' SATIN FINISH
- V1 WHITE REFLECTIVE VINYL - TBD
- V2 3M SCOTCHCAL "RED " REFLECTIVE VINYL FILM NO. 680-72
- V3 3M SCOTCHCAL 'INTENSE BLUE' VINYL FILM NO. 188C
- V4 3M SCOTCHLITE 'BLACK' REFLECTIVE VINYL FILM NO. 180C-12

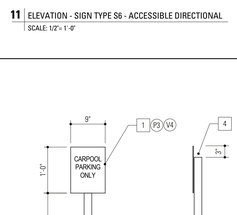

LANDSCAPE CONDITION

21 ELEVATION - SIGN TYPE S8 - CARPOOL PARKING ONLY & S9 - CLEAN AIR VEHICLE PARKING
SCALE: 3/4" = 1'-0"

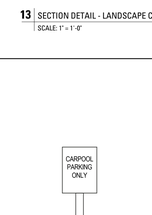

22 HARDSCAPE CONDITION
SCALE: 3/4" = 1'-0"

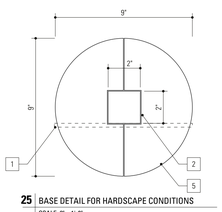

25 BASE DETAIL FOR HARDSCAPE CONDITIONS
SCALE: 3" = 1'-0"

NOTES SAC_ST3A-S_Carpool-CAV_Pkg.ai

1. 3/16" THK. ALUMINUM SIGN PANEL WITH PAINT FINISH AND APPLIED VINYL GRAPHICS WITH MATTHEWS SATIN CLEAR OVERCOAT. BACK AND SIDES OF PANEL TO BE PAINTED TO MATCH POST. SIGN PANEL TO BE ADHERED TO POST WITH LORDS ADHESIVE.
2. 2" SHARP CORNER SQUARE ALUMINUM TUBE WITH PAINT FINISH. TUBE WALL THICKNESS TO BE MINIMUM .125" THK. CORNERS TO BE SLIGHTLY EASED TO ENSURE PAINT ADHESION.
3. CONCRETE FOOTING AS REQUIRED BY SIGN CONTRACTORS STRUCTURAL ENGINEERING CALCULATIONS. CONCRETE COLOR AND FINISH TO MATCH PROJECT STANDARDS.
4. CLOSED POST CAP WITH PAINT FINISH TO MATCH POST.
5. 3/8" THK. ALUMINUM X 9" DIAM. ROUND BEAUTY PLATE IN 2 SECTIONS TO FIT AROUND POST. PLATE TO BE EPOXIED TO HARDSCAPE.

COLORS

- P3 WHITE PAINT FINISH (TBD)
- V4 3M SCOTCHLITE 'BLACK' REFLECTIVE VINYL FILM NO. 180C-12

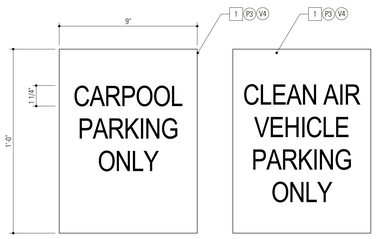

23 DETAIL - SIGN TYPE S8
SCALE: 3" = 1'-0"

24 DETAIL - SIGN TYPE S9
SCALE: 3" = 1'-0"

29 ELEVATION - SIGN TYPE S10 - GENERATOR SIGN
SCALE: HALF

NOTES SAC_ST10_Generator.ai

1. 1/16" THK. ACRYLIC PANEL WITH PAINT FINISH. SIGN PANEL TO BE ADHERED TO GENERATOR ENCLOSURE WITH VHB TAPE AND ADHESIVE AS REQUIRED.

COLORS

- P1 CHARCOAL GRAY - COLOR TBD
- V1 WHITE VINYL - COLOR TBD

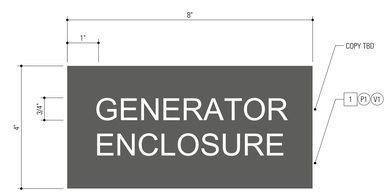

26 ELEVATION - SIGN TYPE S10 - GENERATOR SIGN
SCALE: HALF

27 SIDE VIEW
SCALE: HALF

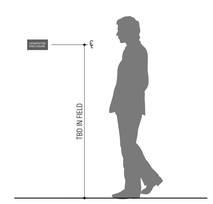

28 LOCATION ELEVATION
SCALE: 1/2" = 1'-0"

hGA.
1918 Main Street, Third Floor
Santa Monica , California 90405
Telephone 310.557.7600

STRUCTURAL ENGINEER
SAIFUL BOUQUET
155 N LAKE AVE
PASADENA, CA 91101
626-304-2616

MECHANICAL & PLUMBING ENGINEER
STANTEC CONSULTING INC
14130 RIVERSIDE DR. # 201
SHERMAN OAKS, CA 91423
818-377-8220

ELECTRICAL ENGINEER
FBA ENGINEERING
150 PAULARINO AVE. #A120
COSTA MESA, CA 92626
949-852-9995

CIVIL ENGINEER
KPFF CONSULTING ENGINEERS
700 SOUTH FLOWER ST. #2100
LOS ANGELES, CA 90017
213-418-0201

LANDSCAPE ARCHITECT
LYNN CAPOUYA, INC.
17992 MITCHELL SOUTH, #110
IRVINE, CA 92614
949-756-0150

LABORATORY CONSULTANT
RESEARCH FACILITIES DESIGN
3965 FIFTH AVE. #400
SAN DIEGO, CA 92103
619-297-0159

SCIENCE CENTER
SANTA ANA COLLEGE

RANCHO SANTIAGO COMMUNITY COLLEGE DISTRICT

1530 W. 17TH ST.
SANTA ANA, CA 92706

SANTA ANA COLLEGE

I HEREBY CERTIFY THAT THIS PLAN, SPECIFICATION OR REPORT WAS PREPARED BY ME OR UNDER MY DIRECT SUPERVISION AND THAT I AM A DULY LICENSED ARCHITECT UNDER THE LAWS OF THE STATE OF CA

LICENSED ARCHITECT NOEL G. MATTHEW DAVIES RENEWAL DATE SEPTEMBER 30, 2017 STATE OF CALIFORNIA

NAME: NOEL DAVIES
DATE: JULY 06, 2017
REGISTRATION NUMBER: N/A

NO	DESCRIPTION	DATE
2	Addendum 2	9/01/17

ISSUANCE HISTORY - THIS SHEET

DRAWN BY: BD / LN | REVIEW BY: ND

HGA NO: 3584-001-00

SIGNAGE DETAILS

DATE: JULY 06, 2017

GS.12

ADDENDA PACKAGE

SIGNAGE CONSULTANT
DAVIES ASSOCIATES, INC.
9424 DAYTON WAY, #217
BEVERLY HILLS, CA 90210
310-247-9572

©COPYRIGHT HAMMEL, GREEN AND ABRAHAMSON, INC.

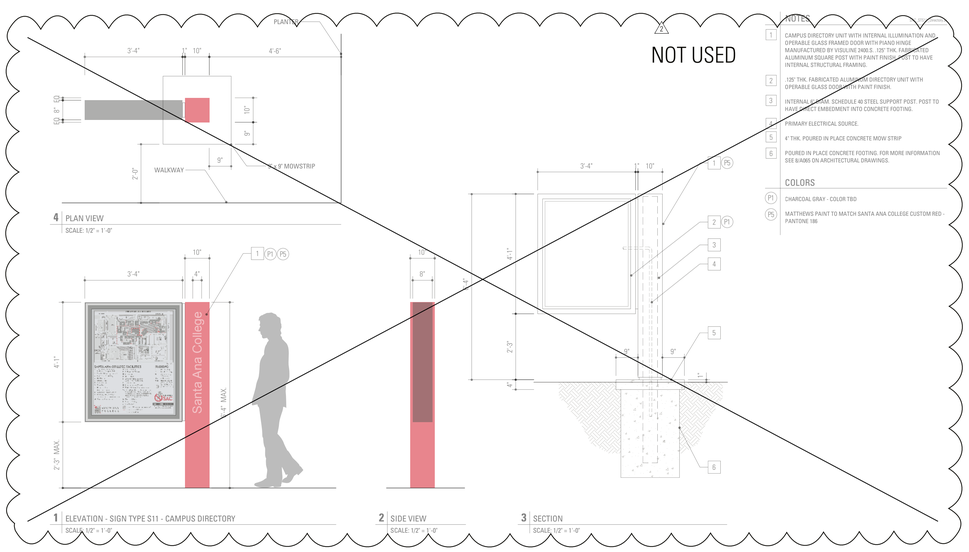

NOT USED

4 PLAN VIEW
SCALE: 1/2" = 1'-0"

1 ELEVATION - SIGN TYPE S11 - CAMPUS DIRECTORY
SCALE: 1/2" = 1'-0"

2 SIDE VIEW
SCALE: 1/2" = 1'-0"

3 SECTION
SCALE: 1/2" = 1'-0"

NOTES

1. CAMPUS DIRECTORY UNIT WITH INTERNAL ILLUMINATION AND OPERABLE GLASS FRAMED DOOR WITH PIANO HINGE MANUFACTURED BY VISUALINE 2400 S. .125" THK. FABRICATED ALUMINUM SQUARE POST WITH PAINT FINISH. POST TO HAVE INTERNAL STRUCTURAL FRAMING.
2. .125" THK. FABRICATED ALUMINUM DIRECTORY UNIT WITH OPERABLE GLASS DOOR WITH PAINT FINISH.
3. INTERNALLY SEAL SCHEDULE 40 STEEL SUPPORT POST. POST TO HAVE DIRECT EMBEDMENT INTO CONCRETE FOOTING.
4. PRIMARY ELECTRICAL SOURCE.
5. 4" THK. POURED IN PLACE CONCRETE MOW STRIP
6. POURED IN PLACE CONCRETE FOOTING. FOR MORE INFORMATION SEE 9/A065 ON ARCHITECTURAL DRAWINGS.

COLORS

P1 CHARCOAL GRAY - COLOR TBD

P5 MATTHEWS PAINT TO MATCH SANTA ANA COLLEGE CUSTOM RED - PANTONE 186

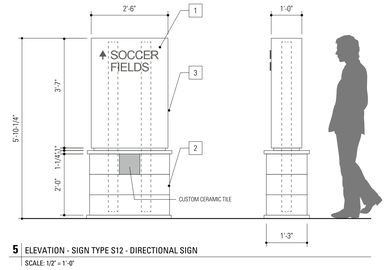

5 ELEVATION - SIGN TYPE S12 - DIRECTIONAL SIGN
SCALE: 1/2" = 1'-0"

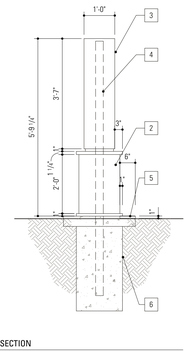

6 SECTION
SCALE: 1/2" = 1'-0"

NOTES SAC_ST012_Directional.ai

1. 1/2" THK. ALUMINUM FLAT CUT LETTERS/ARROW MECHANICALLY FASTENED TO CABINET FACE.
2. .125" THK. FABRICATED ALUMINUM BASE WITH CUSTOM TILE CLADDING.
3. .125" THK. FABRICATED ALUMINUM SIGN CABINET WITH PAINT FINISH AND INTERNAL STRUCTURAL FRAMING.
4. 3" DIAM. STEEL SUPPORT POSTS. POST TO HAVE DIRECT EMBEDMENT INTO CONCRETE FOOTING.
5. 4" THK. POURED IN PLACE CONCRETE MOW STRIP
6. POURED IN PLACE CONCRETE FOOTING. FOR MORE INFORMATION SEE 9/A065 ON ARCHITECTURAL DRAWINGS.

ALL DIMENSIONS TO BE VERIFIED IN FIELD BASED ON EXISTING DIRECTIONAL SIGN

SAC_Type.ai

ABCDEFGHIJKLMN
OPQRSTUVWXYZ
1234567890

8 PROJECT TYPEFACE - ARIAL REGULAR
SCALE: NTS

ABCDEFGHIJKLMN
OPQRSTUVWXYZ
1234567890

9 PROJECT TYPEFACE - ARIAL NARROW REGULAR (SIGN TYPES S1, S2, S3, S3A, S7, S8 & S9 ONLY)
SCALE: NTS

7 PROJECT SYMBOLS
SCALE: NTS

hGA.
1918 Main Street, Third Floor
Santa Monica , California 90405
Telephone 310.557.7600

STRUCTURAL ENGINEER
SAIFUL BOUQUET
155 N LAKE AVE
PASADENA, CA 91101
626-304-2616

MECHANICAL & PLUMBING ENGINEER
STANTEC CONSULTING INC
14130 RIVERSIDE DR. # 201
SHERMAN OAKS, CA 91423
818-377-8220

ELECTRICAL ENGINEER
FBA ENGINEERING
150 PAULARINO AVE. #A120
COSTA MESA, CA 92626
949-852-9995

CIVIL ENGINEER
KPFF CONSULTING ENGINEERS
700 SOUTH FLOWER ST. #2100
LOS ANGELES, CA 90017
213-418-0201

LANDSCAPE ARCHITECT
LYNN CAPOUYA, INC.
17992 MITCHELL SOUTH, #110
IRVINE, CA 92614
949-756-0150

LABORATORY CONSULTANT
RESEARCH FACILITIES DESIGN
3965 FIFTH AVE. #400
SAN DIEGO, CA 92103
619-297-0159

SCIENCE CENTER
SANTA ANA COLLEGE

RANCHO SANTIAGO COMMUNITY COLLEGE DISTRICT

1530 W. 17TH ST.
SANTA ANA, CA 92706

SANTA ANA COLLEGE

I HEREBY CERTIFY THAT THIS PLAN, SPECIFICATION OR REPORT WAS PREPARED BY ME OR UNDER MY DIRECT SUPERVISION AND THAT I AM A DULY LICENSED ARCHITECT UNDER THE LAWS OF THE STATE OF CA.

NAME: NOEL DAVIES
DATE: JULY 06, 2017
REGISTRATION NUMBER: N/A

NO	DESCRIPTION	DATE
2	Addendum 2	9/01/17

ISSUANCE HISTORY - THIS SHEET

DRAWN BY: BD / LN | REVIEW BY: ND

HGA NO: 3584-001-00

SIGNAGE DETAILS

DATE: JULY 06, 2017

GS.13

ADDENDA PACKAGE

SIGNAGE CONSULTANT
DAVIES ASSOCIATES, INC.
9424 DAYTON WAY, #217
BEVERLY HILLS, CA 90210
310-247-9572

©COPYRIGHT HAMMEL, GREEN AND ABRAHAMSON, INC.

GENERAL NOTES

1. ALL WALL BENCHTOPS AND MOVABLE TABLES SHALL BE 30" DEEP INCLUDING WALL BENCH BACK SPLASH (UNLESS OTHERWISE NOTED).
2. ALL ISLAND/PENINSULA BENCHTOPS SHALL BE 60" DEEP (UNLESS OTHERWISE NOTED).
3. ALL BENCHES AND TABLES SHALL BE 36" HIGH (UNLESS OTHERWISE NOTED).
4. ALL BENCH/TABLE TOPS TO BE 1" THICK EPOXY RESIN (UNLESS OTHERWISE NOTED).
5. ALL BACK AND SIDE SPLASHES TO BE 3/4" THICK AND 4" HIGH, PIPEDROP CURBS TO BE 3/4" THICK AND 5" HIGH (UNLESS OTHERWISE NOTED).
6. PROVIDE SIDESPLASHES AT ALL BENCH TOPS AGAINST FUME HOODS AND/OR ADJACENT WALLS.
7. OVERALL LENGTH OF BENCHTOPS SHALL BE DETERMINED BY CASEWORK SIZES AND DIMENSIONS AS INDICATED ON PLANS. TOPS SHALL OVERHANG 1/2" AT EACH END AND 1" FROM FRONT OF BASE CABINETS AND TABLES. WHEN OVERALL DIMENSIONS ARE GIVEN, 1/2" OVERHANG IS NOT INCLUDED.
8. ALL CASEWORK, FUME HOODS AND ANY OTHER FURNISHINGS WITH EXPOSED-TO-VIEW BACKS AND SIDES SHALL BE FINISHED.
9. INSTALL CLOSURE PANELS BETWEEN BACK OF HOODS AND WALLS AT EXPOSED ENDS AND BETWEEN BASE CABINETS AND/OR HOODS THAT ARE SET BACK TO BACK. FOR BASE CABINETS, PROVIDE EXTENDED ENDS AT THESE LOCATIONS.
10. ALL PENETRATIONS THROUGH BENCHTOP SHALL BE SEALED WITH SEALANT.
11. BACKS OF COUNTERTOPS AND SPLASHES AGAINST WALLS SHALL BE SEALED TO THE WALL WITH SEALANT.
12. CONTRACTOR SHALL FIELD VERIFY ALL DIMENSIONS PRIOR TO FABRICATION.
13. OWNER'S REPRESENTATIVE WILL SELECT COLORS FOR ALL COMPONENTS OF PROJECT INDICATED ON THESE DRAWINGS. COLOR SELECTION WILL BE FROM THE CASEWORK MANUFACTURER'S STANDARD COLOR LINE.
14. FREE STANDING SHELVING AND CASEWORK LESS THAN 18" DEEP SHALL BE SECURED TO PREVENT TIPPING. SUBMIT SHOP DRAWINGS OF ATTACHMENT PRIOR TO INSTALLATION.
15. SAFETY SHOWER/EYEWASH UNITS SHALL COMPLY WITH ANSI STANDARDS FOR USABILITY BY THE PHYSICALLY DISABLED. SAFETY SHOWER/EYEWASH UNITS SHALL BE FURNISHED UNDER DIVISION 11 FOR INSTALLATION UNDER DIVISION 22.
16. FOR LABORATORY SERVICE FITTING TYPES, LOCATIONS AND ORDER, SEE LABORATORY FURNISHINGS PLANS. THESE FITTINGS SHALL BE PROVIDED UNDER DIVISION 11, FOR INSTALLATION UNDER DIVISION 22 U.O.N.
17. AT ALL TALL FREESTANDING VENTED, CORROSIVE, OR SOLVENT STORAGE CABINETS, VENT PIPING WILL BE PROVIDED AND INSTALLED FROM THE CABINET POINT OF CONNECTION TO THE EXHAUST DUCT SYSTEM PER DIVISION 23.
18. WHERE NO FUME HOOD OCCURS ADJACENT TO UNDER COUNTER CORROSIVE STORAGE CABINETS, ROUTE VENT PIPE (IN PIPE CHASE) UP NEAREST PIPE DROP ENCLOSURE TO EXHAUST DUCT SYSTEM FOR CONNECTION UNDER DIVISION 23.
19. WHERE FUME HOOD OCCURS ADJACENT TO UNDER COUNTER CORROSIVE STORAGE CABINETS, ROUTE VENT PIPE (IN PIPE CHASE) TO FUME HOOD AND EXTEND 4" ABOVE FUME HOOD WORK SURFACE BEHIND BAFFLE.
20. SNORKEL EXHAUST EQUIPMENT SHOWN ON THESE DRAWINGS SHALL BE PROVIDED UNDER DIVISION 11. DIVISION 23 SHALL PROVIDE DUCTWORK ROUTING AND MAKE FINAL CONNECTION TO SNORKEL EQUIPMENT.
21. LOCATION OF EQUIPMENT, SUCH AS FUME HOODS, OVERHEAD SERVICE CARRIERS, BRACES OR ANY OTHER ITEMS THAT MAY INTERFERE WITH LIGHTING, STRUCTURAL OR MECHANICAL SYSTEMS, SHALL BE CAREFULLY COORDINATED. NOTIFY OWNER'S REPRESENTATIVE OF DISCREPANCIES PRIOR TO PROCEEDING WITH WORK.
22. UNLESS OTHERWISE NOTED, ALL MISCELLANEOUS CHANNELS, BRACKETS AND FITTINGS INDICATED ON ALL LABORATORY FURNISHINGS DRAWINGS SHALL BE SUPPLIED, INSTALLED AND PAINTED UNDER DIVISION 11.
23. CONTRACTOR SHALL EXAMINE ALL LABORATORY FURNISHINGS PLANS AND COORDINATE WITH REFLECTED CEILING PLANS FOR PROPER CEILING HEIGHTS & PIPE DROP ENCLOSURE HEIGHTS AND LOCATIONS.
24. OVERHEAD SERVICE CARRIERS, HEAVY DUTY UNISTRUT AND OTHER STRUCTURALLY ANCHORED AND SUSPENDED DEVICES WHICH REQUIRE COORDINATION WITH OTHER TRADES SHALL BE THE RESPONSIBILITY OF THIS DIVISION (UNLESS OTHERWISE NOTED). ADDITIONAL FRAMING MAY BE REQUIRED TO ACCOMMODATE ANCHORAGE AROUND DUCTWORK OR OTHER OBSTRUCTIONS.
25. ALL BULLETIN BOARDS, MARKER BOARDS, CHALKBOARDS, PROJECTION SCREENS, COAT RACKS AND FIRE EXTINGUISHERS ARE INDICATED ON THE "LF" DRAWINGS FOR COORDINATION ONLY.
26. SERVICE FITTINGS SHOWN ON THE "LF" PLAN DRAWINGS ARE FOR LOCATION ONLY. REFER TO DETAILS AND SPECIFICATIONS FOR ACTUAL FITTINGS.
27. ELECTRICAL DEVICES SHALL BE PROVIDED UNDER DIVISION 26. ELECTRICAL DEVICES SHOWN ON THE "LF" DRAWINGS ARE FOR THE LOCATION OF CASEWORK CUTOUTS. DEVICES SHOWN AT CONTROLLED ENVIRONMENTAL ROOMS, FUME HOODS AND LAMINAR FLOW HOODS SHALL BE PROVIDED BY THE EQUIPMENT SUPPLIER.
28. ALL WALL MOUNTED RACEWAYS SHALL BE MOUNTED 41" A.F.F. TO THE BOTTOM OF THE RACEWAY U.O.N.
29. PAPER TOWEL AND SOAP DISPENSERS SHOWN FOR COORDINATION PURPOSES. REFER TO ARCHITECTURAL FOR ALL FINAL LOCATIONS, DETAILS, AND OTHER REQUIREMENTS.

/2

LABORATORY SYMBOLS LEGEND

	SYMBOL LEGEND	DESCRIPTION	DETAIL
1		PIPE DROP ENCLOSURE	1 LF4.02 / 2 LF4.02 / 3 LF4.02
2		DRYING RACK	8 LF4.01
3		ADJUSTABLE WALL SHELVES (2 TIER U.O.N.)	9 LF4.03
4		ADJUSTABLE ISLAND BENCH SHELVING (2 TIER U.O.N.)	7 LF4.03 / 8 LF4.03
5		HEAVY DUTY ADJUSTABLE SHELVES (5 TIER U.O.N.)	1 LF4.04
6		WIRE SHELVING UNIT	4 LF4.04
7		CYLINDER RESTRAINT	5 LF4.02
8		CYLINDER RACK ASSEMBLY	6 LF4.02
9		SNORKEL FUME EXHAUST - SEE EXHAUST SCHEDULE	9 LF4.00
10		OVERHEAD SERVICE CARRIER	1 LF4.03
11		OVERHEAD UNISTRUT	4 LF4.03
12	SS EW	SAFETY SHOWER WITH EYEWASH UNIT	2 LF5.02
13	SS	RECESSED SAFETY SHOWER WITH EYEWASH UNIT	1 LF5.02
14		GARBAGE DISPOSAL (BY DIV. 22, SHOWN FOR COORDINATION ONLY)	
15		COAT HOOKS - (SEE ARCHITECTURAL DRAWINGS - SHOWN FOR COORDINATION ONLY)	
16		WATER PURIFIER - OWNER FURNISHED, OWNER INSTALLED	
17		PROJECTION SCREEN (SEE ARCHITECTURAL DOCUMENTS, SHOWN FOR COORDINATION ONLY)	
18		WHITE PROJECTION MARKER BOARD (SEE ARCHITECTURAL DOCUMENTS, SHOWN FOR COORDINATION ONLY)	
19		TACK BOARD (SEE ARCHITECTURAL DOCUMENTS, SHOWN FOR COORDINATION ONLY)	
20		CANOPY HOOD - SEE EXHAUST SCHEDULE	8 LF4.00
21		EXAM LIGHT WITH STEM HANDLE - REFER TO SPECIFICATION SECTION 115350	
22		FIXED REAGENT SHELVES - (1 TIER U.O.N.)	2 LF4.04
23		LASER EXHAUST - SEE EXHAUST SCHEDULE	
	WCxx	WALL CABINET - SEE CASEWORK MENU	
	TAxx	TALL STORAGE CABINET - SEE CASEWORK MENU	
	MT	MOVABLE TABLE - SEE CASEWORK MENU	
		LEG POST UNDER BENCH/TABLE TOP	
	6'CFH	CHEMICAL FUME HOOD - SEE EXHAUST SCHEDULE	1 LF4.00 / 2 LF4.00
		OWNER FURNISHED, OWNER INSTALLED EQUIPMENT	
		EPOXY RESIN SINK - SEE SINK SCHEDULE	
		STAINLESS STEEL SINK - SEE SINK SCHEDULE	
		CUP SINK - SEE SINK SCHEDULE	
		STAINLESS STEEL SCULLERY SINK - SEE SINK SCHEDULE	
		ADA COMPLIANT AREA	
	FD	FLOOR DRAIN (SHOWN FOR COORDINATION ONLY)	
	FS	FLOOR SINK (SHOWN FOR COORDINATION ONLY)	

30"X36" CLEAR ADA/CBC AREA

LABORATORY BENCHTOP SCHEDULE

E EPOXY RESIN BENCHTOP

S STAINLESS STEEL BENCHTOP

+30", +34", +36" INDICATES BENCHTOP HEIGHT ABOVE FINISHED FLOOR

NOTE:

FOR BENCHTOP TRANSITION HEIGHT REFER TO DETAILS: 7 LF4.01

DETAIL SYMBOLS LEGEND

DETAIL NUMBER / SHEET NUMBER

SECTION NUMBER / SHEET NUMBER

ELEVATION NUMBER / SHEET NUMBER

ELECTRICAL SYMBOLS (SHOWN FOR LOCATION OF CASEWORK AND BENCH TOP CUT-OUTS)

- 120V, 1PH, 20A SINGLE RECEPTACLE
- 120V, 1PH, 20A DUPLEX RECEPTACLE
- DOUBLE DUPLEX RECEPTACLE
- PEDESTAL BOX
- SURFACE RACEWAY

TYPICAL ABBREVIATIONS

(NOTE: NOT ALL ABBREVIATIONS SHOWN ARE USED. REFER TO FLOOR PLANS FOR ACTUAL ABBREVIATION TYPES.)

ADA/CBC	AMERICAN DISABILITIES ACT/ CALIFORNIA BUILDING CODE
A.F.F.	ABOVE FINISHED FLOOR
ARCH	ARCHITECTURAL DOCUMENTS
CFM	CUBIC FEET/MINUTE
CENT	CENTRIFUGE
CLG.	CEILING
CLR.	CLEARANCE
DIA	DIAMETER
DIV.	DIVISION
EQUIP	EQUIPMENT
FZR	FREEZER
GA.	GAUGE
G.C.	GENERAL CONTRACTOR
G.W.	GLASSWARE WASHER
H.D.	HEAVY DUTY
INC	INCUBATOR
MAX.	MAXIMUM
MIN.	MINIMUM
MTD.	MOUNTED
N.T.S.	NOT TO SCALE
O.C.	ON CENTER
OFOI	OWNER FURNISHED, OWNER INSTALLED
OFCI	OWNER FURNISHED, CONTRACTOR INSTALLED
O.H.	OVERHEAD
OHSC	OVERHEAD SERVICE CARRIER
PH	PHASE
P.T.D.	PAPER TOWEL DISPENSER
S.D.	SOAP DISPENSER
REF	REFRIGERATOR
SIM.	SIMILAR
SPEC	SPECIFICATIONS
ST.STL.	STAINLESS STEEL
TEMP	TEMPERATURE
TYP.	TYPICAL
UC	UNDER COUNTER
U.O.N.	UNLESS OTHERWISE NOTED
WP	WEATHERPROOF

LABORATORY SERVICE ABBREVIATIONS

CA	COMPRESSED LAB AIR (100 PSIG)
CO2	CARBON DIOXIDE
EW	EYEWASH
ICW	INDUSTRIAL COLD WATER
IHW	INDUSTRIAL HOT WATER
LG	LABORATORY GAS
LV	LABORATORY VACUUM
PW	PURIFIED WATER
SS	SAFETY SHOWER
(HB)	HOSE BIBB
(IR)	INFRA-RED
(FT)	FOOT OPERATED
__(VB)	VALVE BOX - PROVIDED UNDER DIV. 22
__(V)	SERVICE VALVE - PROVIDED UNDER DIV. 22

hga.
1918 Main Street, Third Floor
Santa Monica, California 90405
Telephone 310.557.7600

STRUCTURAL ENGINEER
SAIFUL BOUQUET
155 N LAKE AVE
PASADENA, CA 91101
626-304-2616

MECHANICAL & PLUMBING ENGINEER
STANTEC CONSULTING INC
14130 RIVERSIDE DR. # 201
SHERMAN OAKS, CA 91423
818-377-8220

ELECTRICAL ENGINEER
FBA ENGINEERING
150 PAULARINO AVE. #A120
COSTA MESA, CA 92626
949-852-9995

CIVIL ENGINEER
KPFF CONSULTING ENGINEERS
700 SOUTH FLOWER ST. #2100
LOS ANGELES, CA 90017
213-418-0201

LANDSCAPE ARCHITECT
LYNN CAPOUYA, INC.
17992 MITCHELL SOUTH, #110
IRVINE, CA 92614
949-756-0150

LABORATORY CONSULTANT
RESEARCH FACILITIES DESIGN
3965 FIFTH AVE. #400
SAN DIEGO, CA 92103
619-297-0159

SCIENCE CENTER
SANTA ANA COLLEGE
RANCHO SANTIAGO COMMUNITY COLLEGE DISTRICT
1530 W. 17TH ST.
SANTA ANA, CA 92706

SANTA ANA COLLEGE

I HEREBY CERTIFY THAT THIS PLAN, SPECIFICATION OR REPORT WAS PREPARED BY ME OR UNDER MY DIRECT SUPERVISION AND THAT I AM A DULY LICENSED ARCHITECT UNDER THE LAWS OF THE STATE OF CA

JAMES G. MATSON — LICENSED ARCHITECT — No. C13036 — EXPIRATION 08.31.2017 — STATE OF CALIFORNIA

NAME: JAMES G. MATSON
DATE: MAY 16, 2017
REGISTRATION NUMBER: C13036

NO	DESCRIPTION	DATE
2	Addendum 2	08-30-17

ISSUANCE HISTORY - THIS SHEET

DRAWN BY: Author | REVIEW BY: Approver

HGA NO: 3584-001-00

GENERAL NOTES

DATE: JULY 06, 2017

LF1.00

ADDENDA PACKAGE

C:\Users\mrodr\Documents\LF-CENTRAL-SAC-2016_mrodr@hfad.com.rvt
8/30/2017 3:39:09 PM
Author

© COPYRIGHT HAMMEL, GREEN AND ABRAHAMSON, INC.

EXHAUST EQUIPMENT SCHEDULES

CHEMICAL FUME HOODS

DRAWING REFERENCE	HOOD SIZE AND TYPE	TYPE OF SASH	TYPE OF SILL	NUMBER OF VERTICAL SASHES	NOMINAL VERTICAL SASH HEIGHT	HORIZONTAL SASH CONFIGURATION		DESIGN OPERATING CONDITIONS			MAXIMUM OPERATING CONDITIONS			MINIMUM VAV AIR FLOW (NOTE 1)	MAX HOOD STATIC PRESSURE DROP	EXHAUST CONNECTION BY MECHANICAL (NOTE 2)	REMARKS
								SASH OPENING	FACE VELOCITY	AIRFLOW	SASH OPENING	FACE VELOCITY	AIRFLOW				
					INCH	NUMBER OF SASHES	NUMBER OF TRACKS	INCH	FPM	CFM	INCH	FPM	CFM	CFM	INCH OF WATER	INCH DIAMETER	2
4' CFH	4' CHEMICAL FUME HOOD	VERTICAL	AIRFOIL	1	30	-	-	18	100	500	28.5	100	800	200	0.25	10	
4' ACFH	4' ADA CHEMICAL FUME HOOD	VERTICAL	AIRFOIL	1	30	-	-	18	100	500	28.5	100	800	200	0.25	10	
5' CFH	5' CHEMICAL FUME HOOD	VERTICAL	AIRFOIL	1	30	-	-	18	100	650	28.5	100	1,050	250	0.25	12	
5' ACFH	5' ADA CHEMICAL FUME HOOD	VERTICAL	AIRFOIL	1	30	-	-	18	100	650	28.5	100	1,050	250	0.25	12	

NOTES:
1. MINIMUM VARIABLE AIR VOLUME (VAV) EXHAUST AIRFLOW CORRESPONDS TO 25" DEEP WORK SURFACE. FOR EXTENDED DEPTHS, APPLY AIRFLOW CORRECTION PER MANUFACTURER'S RECOMMENDATIONS.
2. PROVIDE EXHAUST DUCT TRANSITION PIECE TO TRANSITION FROM FUME HOOD COLLAR SIZE TO SCHEDULED EXHAUST CONNECTION SIZE.

OTHER EXHAUST EQUIPMENT

DRAWING REFERENCE	EQUIPMENT	EXHAUST AIR FLOW	STATIC PRESSURE	EXHAUST DUCT CONNECTION SIZE	REMARKS
		CFM	INCH OF WATER	INCH	
8 (E)	SNOREL EXHAUST	60	0.8	4	BASED ON MOVEX MODEL TERFU MT-1500-75 SNORKEL.
23 (E)	EQUIPMENT CEILING EXHAUST - LASER SYSTEM	400	6.0	6	TERMINATE EXHAUST DUCT 6-INCH BELOW CEILING WITH TRIM COLLAR. PROVIDE MANUAL VOLUME DAMPER ABOVE CEILING. BASED ON EPILOG MODEL ZING.
TCS (E)	CORROSIVE STORAGE CABINET	UNREGULATED	-	2	PROVIDE SCHEDULE 80 PVC/CPVC PIPE FOR EXHAUST DUCT PIPE.
TSS (E)	FLAMMABLE STORAGE CABINET	UNREGULATED	-	2	PROVIDE 2"Ø MAKEUP AIR PIPE CONNECTION FROM ROOM SUPPLY AIR SYSTEM. PROVIDE BLACK IRON PIPE FOR SUPPLY & EXHAUST DUCT.
TAV	TALL VENTED CABINET	UNREGULATED	-	2	PROVIDE SCHEDULE 80 PVC/CPVC PIPE FOR EXHAUST DUCT PIPE.
REFER TO PLANS	DOWNDRAFT DISSECTION TABLE	340	0.5	6	BASED ON MOPEC MODEL HB400 - USER CONTROLLABLE EXHAUST
20	CANOPY HOOD EXHAUST (66"X60")	860	0.2	16	BASED ON 75 CFM/LINEAR FOOT OF EXPOSED PERIMETER OF CANOPY.

LABORATORY SERVICE FITTING SCHEDULE

ABBREV.	FITTING TYPE	MOUNTING	NOTES	DETAIL
CA	COMPRESSED AIR FITTING W/REGULATOR & QUICK DISCONNECT	DECK	SINGLE OUTLET AT BENCH (PROVIDE WRIST BLADE HANDLES AT ADA LOCATIONS)	5 LF5.01
		PANEL	WALL MOUNTED	8 LF5.01
		OVERHEAD	AT OVERHEAD SERVICE CARRIER	7 LF5.01
EW	EYEWASH	DECK	PULL-DOWN	9 LF5.01
ICW	INDUSTRIAL COLD WATER	HOOD	REMOTE AT FUME HOOD CUP SINK (PROVIDE BALL VALVE LEVER HANDLES AT ADA HOODS)	7 LF5.00
IHWICW	INDUSTRIAL HOT WATER/ INDUSTRIAL COLD WATER	DECK	AT LABORATORY SINK (PROVIDE WRIST BLADE HANDLES AT ADA SINK)	5 LF5.00
		PANEL	AT SCULLERY SINK	6 LF5.00
		PANEL	AT SCULLERY SINK (PRE-RINSE SPRAY)	4 LF5.00
		DECK	AT LABORATORY SINK (PRE-RINSE SPRAY) (PROVIDE WRIST BLADE HANDLE AT ADA SINK)	3 LF5.00
		DECK	AT LABORATORY SINK (FOOT OPERATED)	1 LF5.00
		DECK	AT LABORATORY SINK (INFRA-RED)	2 LF5.00
PW	PURIFIED WATER	DECK	AT LABORATORY SINK (PROVIDE WRIST BLADE HANDLE AT ADA SINK)	9 LF5.00
		PANEL	AT OFOI PURIFICATION UNIT	1 LF5.01 / 2 LF5.01
		PANEL	AT SCULLERY SINK	4 LF5.01
LG	LABORATORY GAS	DECK	AT WALL BENCH AND ISLAND BENCH	3 LF5.01
		HOOD	REMOTE PROVIDE BALL VALVE LEVER HANDLES AT ADA HOODS)	5 LF5.01
LV	LABORATORY VACUUM	DECK	AT WALL BENCH AND ISLAND BENCH	3 LF5.01
		HOOD	REMOTE (PROVIDE BALL VALVE LEVER HANDLES AT ADA HOODS)	5 LF5.01
SS/EW	SAFETY SHOWER/ EYEWASH UNIT	WALL	BOWL AND SKIRT	2 LF5.02
		WALL (RECESSED)	PULL-DOWN EYEWASH	1 LF5.02

NOTES:
1. FOR INDUSTRIAL WATER 'DO NOT DRINK' SIGN AT FAUCETS. REFER TO DETAIL: 8 LF5.00
2. FOR FIXTURE SPACING REFER TO DETAILS: 1 LF4.05, 2 LF4.05, 3 LF4.05, 4 LF4.05, 5 LF4.05, 6 LF4.05
3. FOR FIXTURE SPACING AT OVERHEAD SERVICE CARRIERS AND WALL MOUNTED LOCATIONS. REFER TO WALL BENCH FIXTURE SPACING DETAIL: 3 LF4.05
4. SERVICE ABBREVIATION __(V) REFERS TO SERVICE VALVE - PROVIDED UNDER DIVISION 22.
5. SERVICE ABBREVIATION __(VB) REFERS TO SERVICE VALVE BOX - PROVIDED UNDER DIVISION 22.

INTERIOR DOOR CLEARANCES (ADA COMPLIANT)

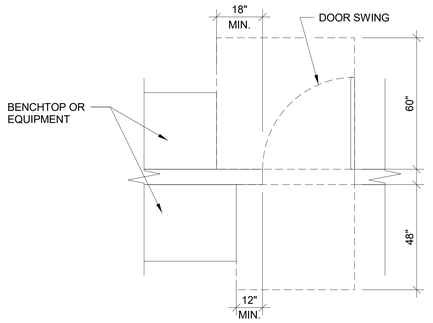

ELECTRICAL AND ADA APPROACH CLEARANCES AT SS/EW

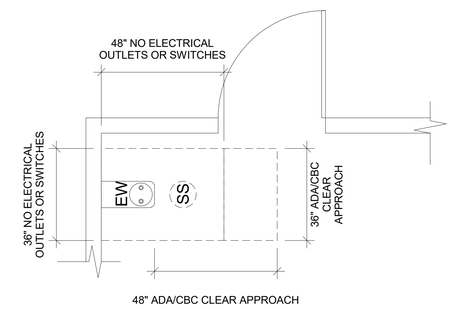

LABORATORY SINK SCHEDULE

SINK NUMBER	DESCRIPTION	OUTLET	WIDTH x DEPTH x HEIGHT (INSIDE DIMENSIONS)	SINK OUTLET SIZE	REMARKS	DETAIL
SK1	EPOXY RESIN	SIDE	21" x 17" x 10"	1-1/2"	DROP-IN	6 LF4.04
SK2	EPOXY RESIN	SIDE	28" x 15" x 12"	1-1/2"	DROP-IN	6 LF4.04
SK2S	STAINLESS STEEL	CENTER	28" x 15" x 12"	1-1/2"	DROP-IN	9 LF4.04
SK3	EPOXY RESIN	CORNER	18" x 15" x 5"	1-1/2"	REQUIRES ADA FITTINGS	6 LF4.04
SK3S	STAINLESS STEEL	CENTER	28" x 15" x 5"	1-1/2"	REQUIRES ADA FITTINGS	9 LF4.04
SK4	EPOXY RESIN	CENTER	25" x 15" x 5"	1-1/2"	REQUIRES ADA FITTINGS	6 LF4.04
SK4S	STAINLESS STEEL	CENTER	30" x 18" x 10"	1-1/2"	INTEGRAL WITH TOP	9 LF4.04
SK5	EPOXY RESIN	CORNER	25" x 15" x 18"	1-1/2"	DROP-IN	6 LF4.04
SK6	EPOXY RESIN	CENTER	(2) 21" x 17" x 10" BOWLS	1-1/2"	DROP-IN	6 LF4.04
SK7	STAINLESS STEEL	CENTER	20" x 16" x 5"	1-1/2"	HANDWASH WALL HUNG	9 LF4.01
SK8	STAINLESS STEEL	CENTER	(2) 24" x 24" x 12" BOWLS	1-1/2"	@ 10'-0" LONG SCULLERY SINK	7 LF4.04
CS1	EPOXY RESIN	CENTER	3" x 6"	1-1/2"	OVAL, TYPICAL @ FUME HOOD W/ RAISED LIP	5 LF4.04

HGA
1918 Main Street, Third Floor
Santa Monica, California 90405
Telephone 310.557.7600

STRUCTURAL ENGINEER
SAIFUL BOUQUET
155 N LAKE AVE
PASADENA, CA 91101
626-304-2616

MECHANICAL & PLUMBING ENGINEER
STANTEC CONSULTING INC
14130 RIVERSIDE DR. # 201
SHERMAN OAKS, CA 91423
818-377-8220

ELECTRICAL ENGINEER
FBA ENGINEERING
150 PAULARINO AVE. #A120
COSTA MESA, CA 92626
949-852-9995

CIVIL ENGINEER
KPFF CONSULTING ENGINEERS
700 SOUTH FLOWER ST. #2100
LOS ANGELES, CA 90017
213-418-0201

LANDSCAPE ARCHITECT
LYNN CAPOUYA, INC.
17992 MITCHELL SOUTH, #110
IRVINE, CA 92614
949-756-0150

LABORATORY CONSULTANT
RESEARCH FACILITIES DESIGN
3965 FIFTH AVE. #400
SAN DIEGO, CA 92103
619-297-0159

SCIENCE CENTER
SANTA ANA COLLEGE
RANCHO SANTIAGO COMMUNITY COLLEGE DISTRICT
1530 W. 17TH ST.
SANTA ANA, CA 92706

SANTA ANA COLLEGE

I HEREBY CERTIFY THAT THIS PLAN, SPECIFICATION OR REPORT WAS PREPARED BY ME OR UNDER MY DIRECT SUPERVISION AND THAT I AM A DULY LICENSED ARCHITECT UNDER THE LAWS OF THE STATE OF CA

JAMES G. MATSON — LICENSED ARCHITECT — No. C13036 — EXPIRATION 08-31-2017 — STATE OF CALIFORNIA
KEN TORGERSON — LICENSED ARCHITECT — REN 8-30-2017 — STATE OF CALIFORNIA

NAME: JAMES G. MATSON
DATE: MAY 16, 2017
REGISTRATION NUMBER: C13036

NO	DESCRIPTION	DATE
2	Addendum 2	08-30-17

ISSUANCE HISTORY - THIS SHEET
DRAWN BY: Author | REVIEW BY: Approver

HGA NO: 3584-001-00

SCHEDULES

DATE: JULY 06, 2017

LF1.01

ADDENDA PACKAGE

© COPYRIGHT HAMMEL, GREEN AND ABRAHAMSON, INC.

C:\Users\mroot\Documents\F-CENTRAL-SAC-2016_mroot@ef.com.txt
8/30/2017 3:39:10 PM
Author

D24
- BASE CABINET TYPE
- WIDTH (INCHES - TYPICAL)

A24L
- BASE CABINET TYPE
- WIDTH
- DOOR HINGE ON LEFT SIDE

A24R
- BASE CABINET TYPE
- WIDTH
- DOOR HINGE ON RIGHT SIDE

LD24
- SITTING HEIGHT AT BASE CABINET & KO
- BASE CABINET TYPE
- WIDTH

KO24
- KNEE OPENING
- WIDTH

KOX24
- KNEE OPENING
- KNEE OPENING TYPE (SEE KNEE OPENINGS SECTION)
- WIDTH
- (X = A, D, OR E)

MT60X
- MOVABLE TABLE
- WIDTH (NOTE: 30"/33" DEPTH ASSUMED PER GENERAL NOTES)
- MOVABLE TABLE TYPE (C) ON CASTERS & (D) W/ DRAWER
- (X = C AND/ OR D)

MT6024
- MOVABLE TABLE
- WIDTH
- DEPTH

WA36
- WALL-HUNG CABINET
- WALL CABINET DOOR TYPE
- WIDTH

TD48
- TALL STORAGE CABINET
- TALL CABINET DOOR TYPE
- WIDTH

TAV48
- DESIGNATES VENTED CABINET WITH 2"DIA CONNECTION

FP — FILLER PANEL

* — DESIGNATES KEY LOCKABLE CASEWORK

** — DESIGNATES PADLOCK HASP

NOTES:

1. FOR CABINET BACKING HEIGHTS REFER TO: (1 LF4.06)

2. FOR SHELVING AND CYLINDER RESTRAINT BACKING HEIGHTS REFER TO: (2 LF4.06)

CASEWORK LEGEND & NOTES

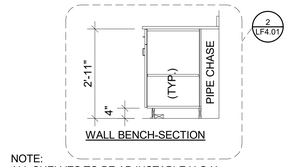

STANDING HEIGHT BASE CABINETS (+36)

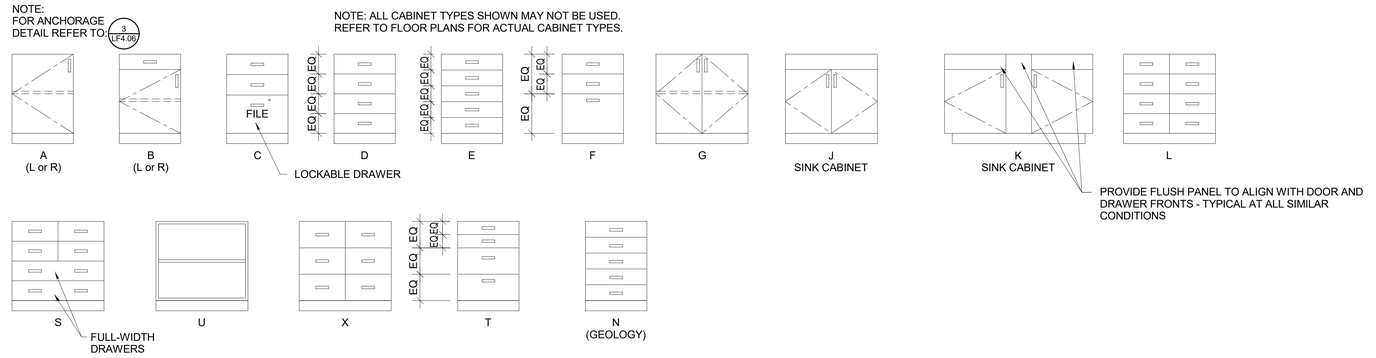

STANDING HEIGHT BASE CABINETS (WOOD - U.O.N.)

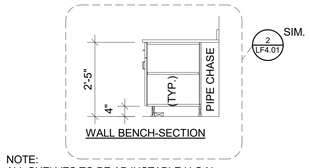

SITTING HEIGHT BASE CABINETS (+30)

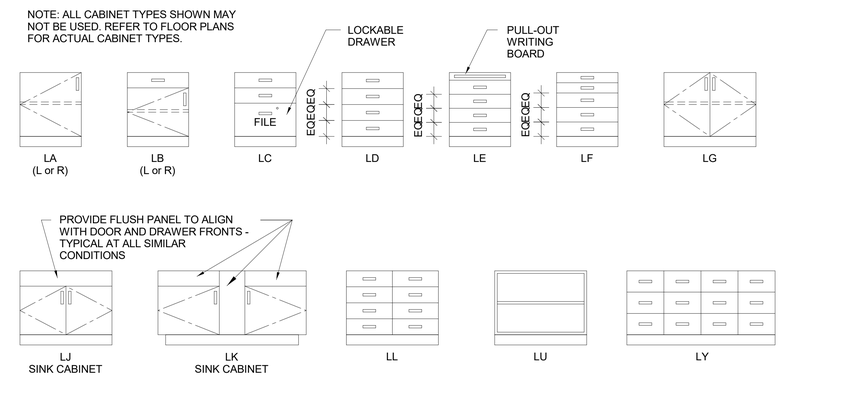

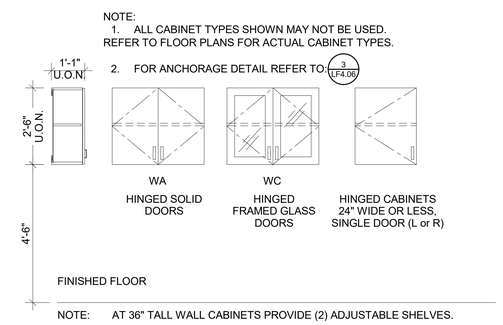

WALL CABINETS (WOOD - U.O.N.)

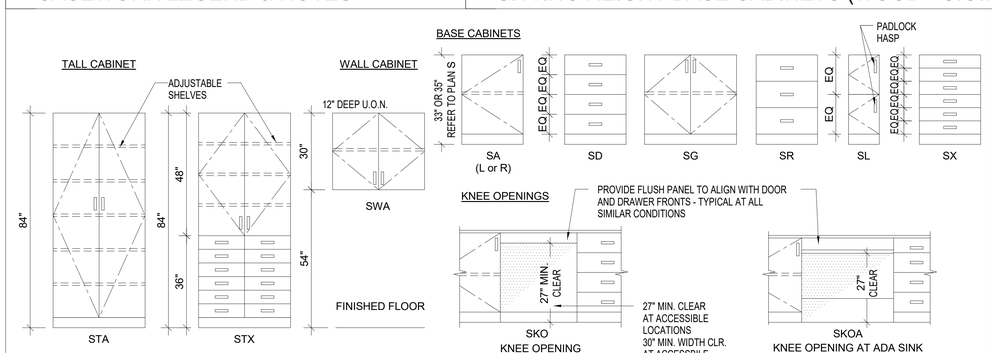

SITTING HEIGHT BASE CABINETS (WOOD - U.O.N)

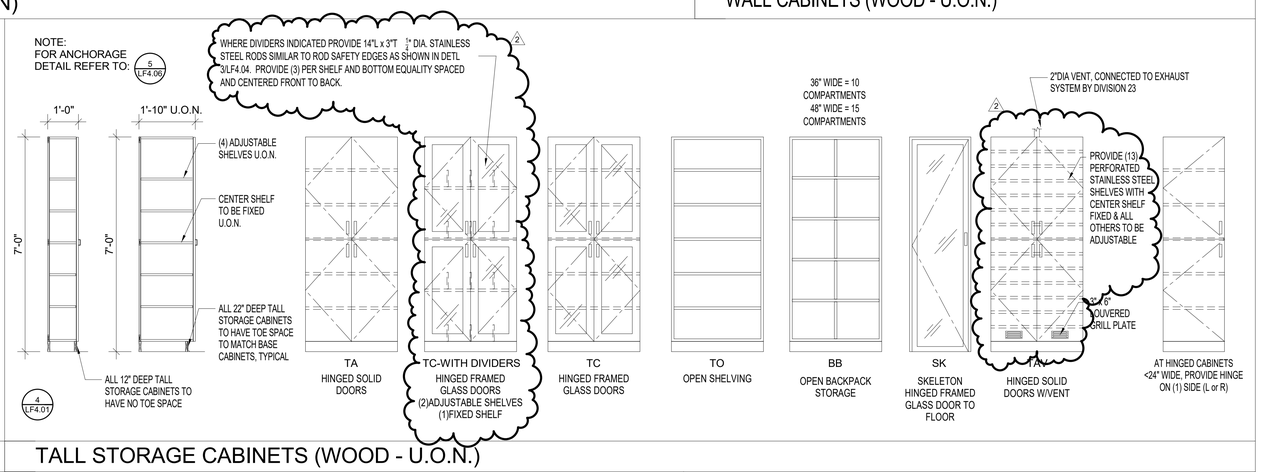

SHOP CABINETS (METAL - U.O.N.)

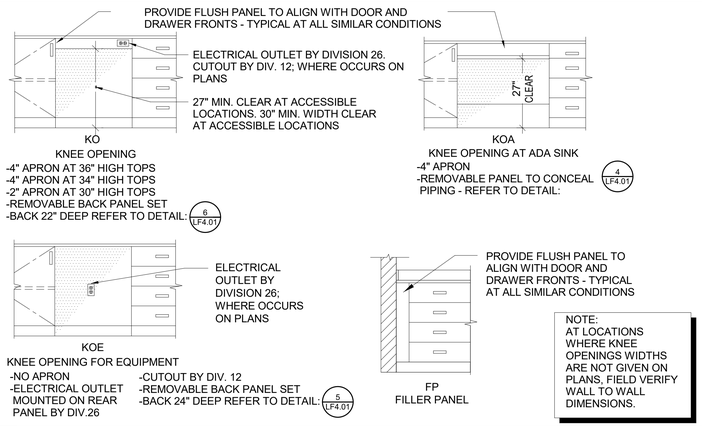

KNEE OPENINGS

TALL STORAGE CABINETS (WOOD - U.O.N.)

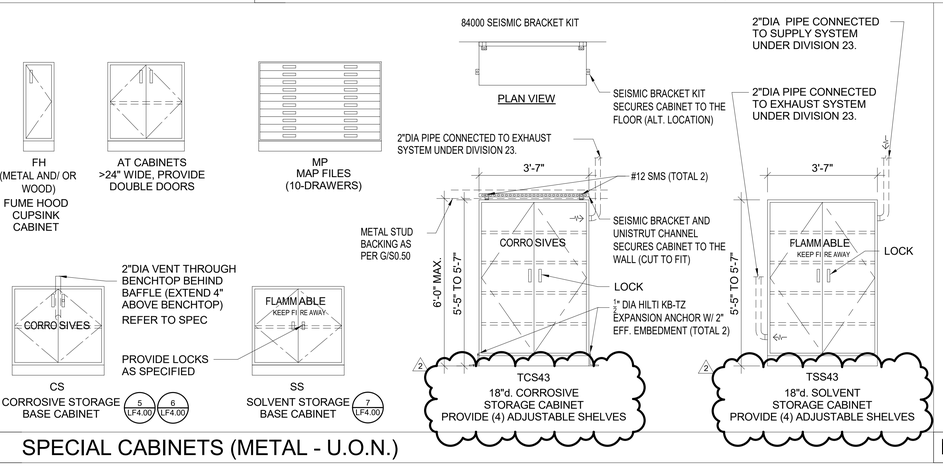

SPECIAL CABINETS (METAL - U.O.N.)

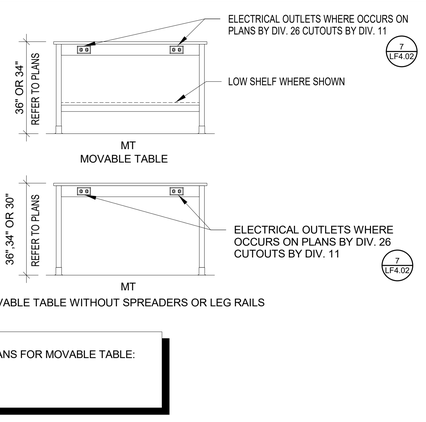

MOVABLE TABLES (METAL OR WOOD - U.O.N.)

1918 Main Street, Third Floor
Santa Monica, California 90405
Telephone 310.557.7600

STRUCTURAL ENGINEER
SAIFUL BOUQUET
155 N LAKE AVE
PASADENA, CA 91101
626-304-2616

MECHANICAL & PLUMBING ENGINEER
STANTEC CONSULTING INC
14130 RIVERSIDE DR. # 201
SHERMAN OAKS, CA 91423
818-377-8220

ELECTRICAL ENGINEER
FBA ENGINEERING
150 PAULARINO AVE. #A120
COSTA MESA, CA 92626
949-852-9995

CIVIL ENGINEER
KPFF CONSULTING ENGINEERS
700 SOUTH FLOWER ST. #2100
LOS ANGELES, CA 90017
213-418-0201

LANDSCAPE ARCHITECT
LYNN CAPOUYA, INC.
17992 MITCHELL SOUTH, #110
IRVINE, CA 92614
949-756-0150

LABORATORY CONSULTANT
RESEARCH FACILITIES DESIGN
3965 FIFTH AVE. #400
SAN DIEGO, CA 92103
619-297-0159

SCIENCE CENTER
SANTA ANA COLLEGE
RANCHO SANTIAGO COMMUNITY COLLEGE DISTRICT
1530 W. 17TH ST.
SANTA ANA, CA 92706

SANTA ANA COLLEGE

I HEREBY CERTIFY THAT THIS PLAN, SPECIFICATION OR REPORT WAS PREPARED BY ME OR UNDER MY DIRECT SUPERVISION AND THAT I AM A DULY LICENSED ARCHITECT UNDER THE LAWS OF THE STATE OF CA

NAME: JAMES G. MATSON
DATE: MAY 16, 2017
REGISTRATION NUMBER: C13036

NO	DESCRIPTION	DATE
2	Addendum 2	08-30-17

ISSUANCE HISTORY - THIS SHEET

DRAWN BY: Author | REVIEW BY: Approver

HGA NO: 3584-001-00

CASEWORK MENU

DATE: JULY 06, 2017

LF1.02

ADDENDA PACKAGE

© COPYRIGHT HAMMEL, GREEN AND ABRAHAMSON, INC.

C:\Users\mrivas\Documents\F-CENTRAL-SAC2016_mrivas@hga.com.vb 8/30/2017 3:30:11 PM Author

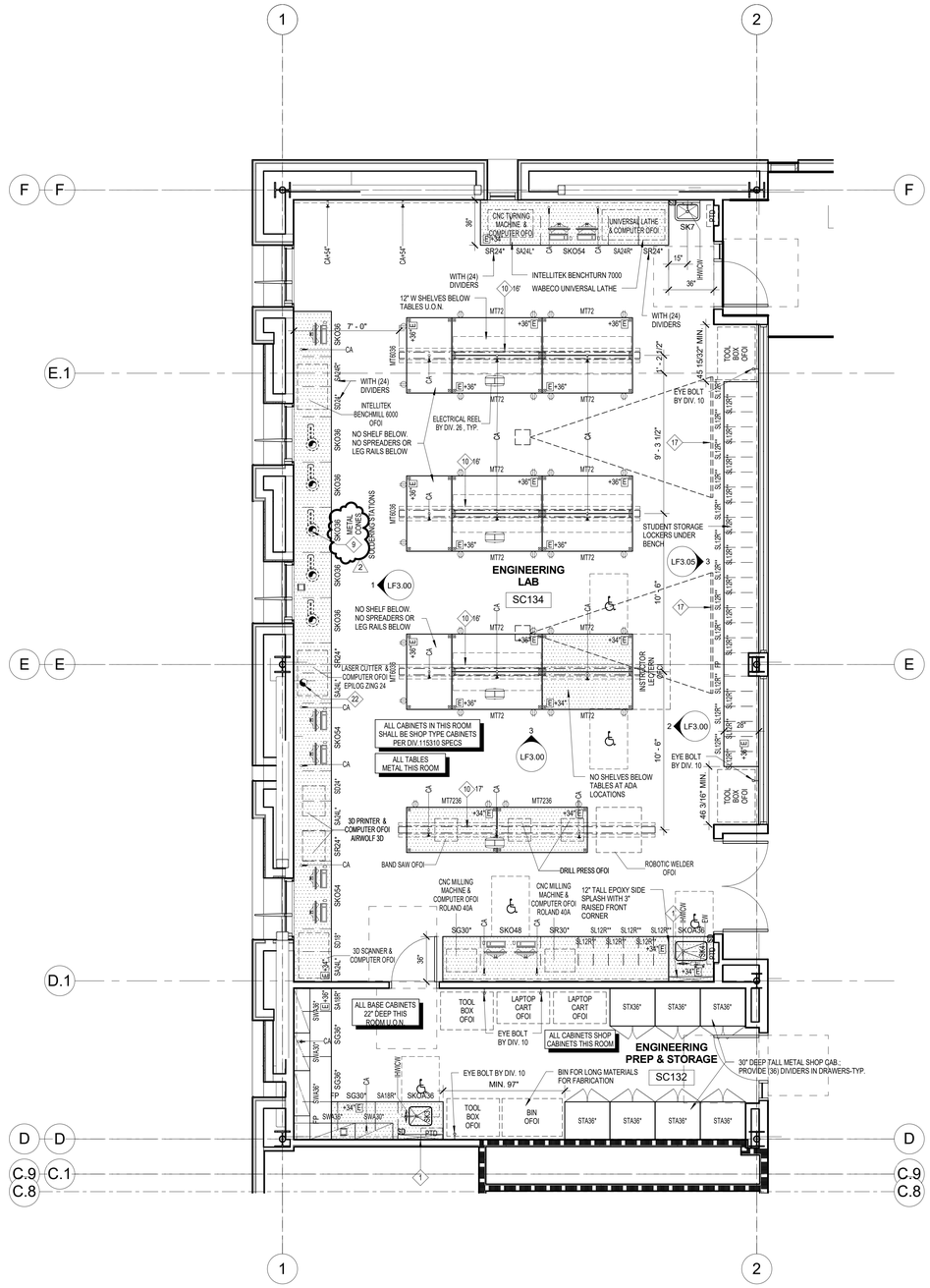

1 FIRST LEVEL PARTIAL PLAN
1/4" = 1'-0"

ALL LOCKABLE CABINETS IN EACH ROOM SHALL BE KEYED ALIKE W/ MASTER KEY SYSTEM - (NO KEY LOCKS AT PAD LOCK HASP LOCATIONS) - TYP AT ALL FLOORS

2

hga.
1918 Main Street, Third Floor
Santa Monica , California 90405
Telephone 310.557.7600

STRUCTURAL ENGINEER
SAIFUL BOUQUET
155 N LAKE AVE
PASADENA, CA 91101
626-304-2616

MECHANICAL & PLUMBING ENGINEER
STANTEC CONSULTING INC
14130 RIVERSIDE DR. # 201
SHERMAN OAKS, CA 91423
818-377-8220

ELECTRICAL ENGINEER
FBA ENGINEERING
150 PAULARINO AVE. #A120
COSTA MESA, CA 92626
949-852-9995

CIVIL ENGINEER
KPFF CONSULTING ENGINEERS
700 SOUTH FLOWER ST. #2100
LOS ANGELES, CA 90017
213-418-0201

LANDSCAPE ARCHITECT
LYNN CAPOUYA, INC.
17992 MITCHELL SOUTH, #110
IRVINE, CA 92614
949-756-0150

LABORATORY CONSULTANT
RESEARCH FACILITIES DESIGN
3965 FIFTH AVE. #400
SAN DIEGO, CA 92103
619-297-0159

SCIENCE CENTER
SANTA ANA COLLEGE

RANCHO SANTIAGO COMMUNITY COLLEGE DISTRICT

1530 W. 17TH ST.
SANTA ANA, CA 92706

SANTA ANA COLLEGE

I HEREBY CERTIFY THAT THIS PLAN, SPECIFICATION OR REPORT WAS PREPARED BY ME OR UNDER MY DIRECT SUPERVISION AND THAT I AM A DULY LICENSED ARCHITECT UNDER THE LAWS OF THE STATE OF CA

LICENSED ARCHITECT JAMES G. MATSON — EXPIRATION DATE SEPTEMBER 30, 2017 — STATE OF CALIFORNIA

LICENSED ARCHITECT LYNN TERUYA — REN 8-30-2017 — STATE OF CALIFORNIA

NAME: JAMES G. MATSON
DATE: MAY 16, 2017
REGISTRATION NUMBER: C13036

NO	DESCRIPTION	DATE
2	Addendum 2	08-30-17

ISSUANCE HISTORY - THIS SHEET

DRAWN BY: Author | REVIEW BY: Approver

HGA NO: 3584-001-00

FIRST LEVEL PARTIAL PLAN

DATE: JULY 06, 2017

LF2.01A

ADDENDA PACKAGE

© COPYRIGHT HAMMEL, GREEN AND ABRAHAMSON, INC.

Author 8/30/2017 3:39:14 PM C:\Users\mricci\Documents\LF-CENTRAL-SAC-2016_mricci@hga.com.rvt

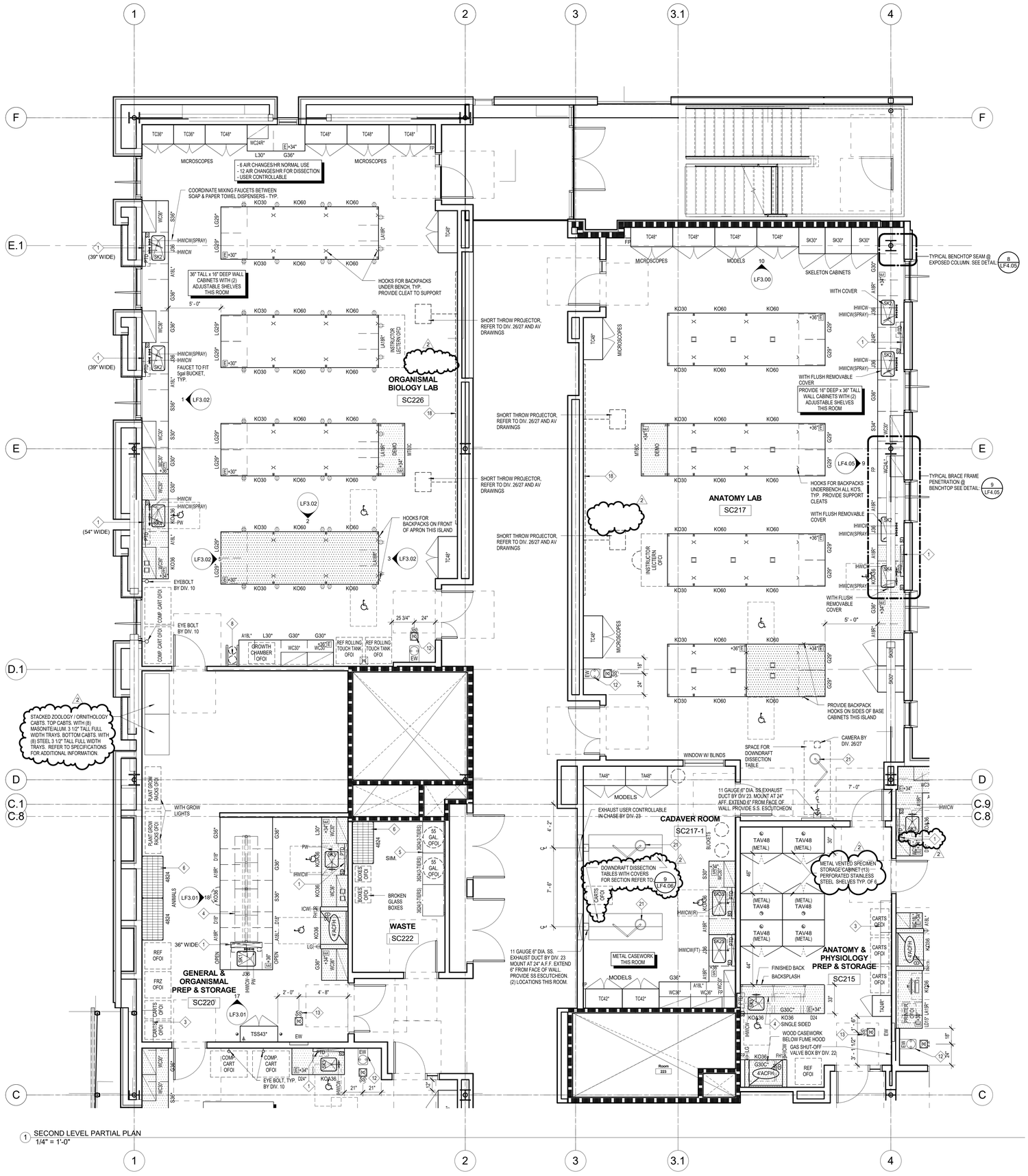

1 SECOND LEVEL PARTIAL PLAN
1/4" = 1'-0"

hga.
1918 Main Street, Third Floor
Santa Monica, California 90405
Telephone 310.557.7600

STRUCTURAL ENGINEER
SAIFUL BOUQUET
155 N LAKE AVE
PASADENA, CA 91101
626-304-2616

MECHANICAL & PLUMBING ENGINEER
STANTEC CONSULTING INC
14130 RIVERSIDE DR. # 201
SHERMAN OAKS, CA 91423
818-377-8220

ELECTRICAL ENGINEER
FBA ENGINEERING
150 PAULARINO AVE. #A120
COSTA MESA, CA 92626
949-852-9995

CIVIL ENGINEER
KPFF CONSULTING ENGINEERS
700 SOUTH FLOWER ST. #2100
LOS ANGELES, CA 90017
213-418-0201

LANDSCAPE ARCHITECT
LYNN CAPOUYA, INC.
17992 MITCHELL SOUTH, #110
IRVINE, CA 92614
949-756-0150

LABORATORY CONSULTANT
RESEARCH FACILITIES DESIGN
3965 FIFTH AVE. #400
SAN DIEGO, CA 92103
619-297-0159

SCIENCE CENTER
SANTA ANA COLLEGE

RANCHO SANTIAGO COMMUNITY COLLEGE DISTRICT

1530 W. 17TH ST.
SANTA ANA, CA 92706

SANTA ANA COLLEGE

I HEREBY CERTIFY THAT THIS PLAN, SPECIFICATION OR REPORT WAS PREPARED BY ME OR UNDER MY DIRECT SUPERVISION AND THAT I AM A DULY LICENSED ARCHITECT UNDER THE LAWS OF THE STATE OF CALIFORNIA

LICENSED ARCHITECT JAMES G. MATSON No. C13036 RENEWAL DATE SEPTEMBER 30, 2017 STATE OF CALIFORNIA

LICENSED ARCHITECT KEN TOMIYASU No. C27643 RENEWAL DATE 8-30-2017 STATE OF CALIFORNIA

NAME: JAMES G. MATSON
DATE: MAY 16, 2017
REGISTRATION NUMBER: C13036

NO	DESCRIPTION	DATE
2	Addendum 2	08-30-17

ISSUANCE HISTORY - THIS SHEET

DRAWN BY: Author | REVIEW BY: Approver

HGA NO: 3584-001-00

SECOND LEVEL PARTIAL PLAN

DATE: JULY 06, 2017

LF2.02A

ADDENDA PACKAGE

© COPYRIGHT HAMMEL, GREEN AND ABRAHAMSON, INC.

Author 8/30/2017 3:39:17 PM C:\Users\mlos\Documents\F-CENTRAL-SAC-2016_mlos@sfad.com.rvt

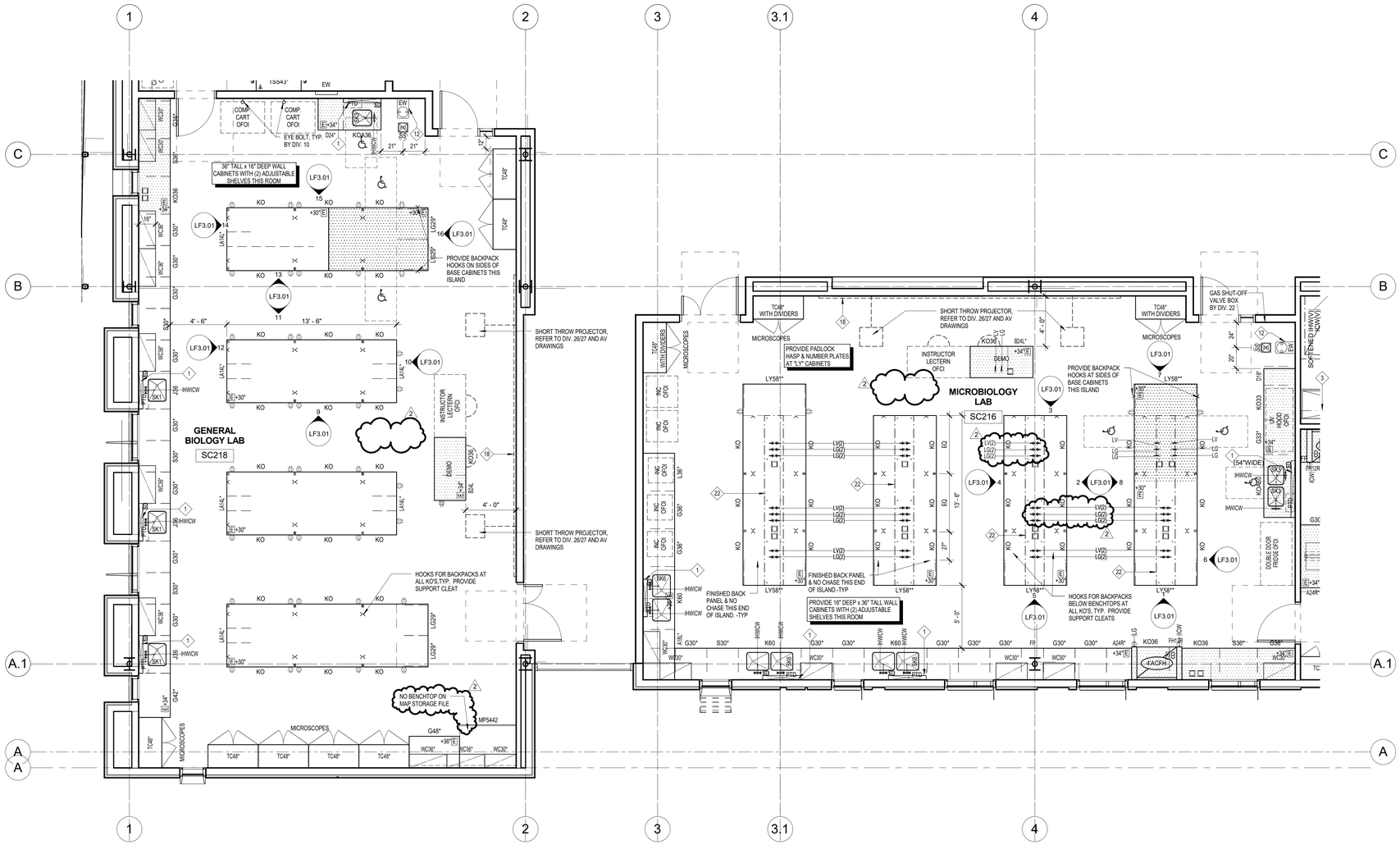

1 SECOND LEVEL PARTIAL PLAN
1/4" = 1'-0"

HGA
1918 Main Street, Third Floor
Santa Monica, California 90405
Telephone 310.557.7600

STRUCTURAL ENGINEER
SAIFUL BOUQUET
155 N LAKE AVE
PASADENA, CA 91101
626-304-2616

MECHANICAL & PLUMBING ENGINEER
STANTEC CONSULTING INC
14130 RIVERSIDE DR. # 201
SHERMAN OAKS, CA 91423
818-377-8220

ELECTRICAL ENGINEER
FBA ENGINEERING
150 PAULARINO AVE. #A120
COSTA MESA, CA 92626
949-852-9995

CIVIL ENGINEER
KPFF CONSULTING ENGINEERS
700 SOUTH FLOWER ST. #2100
LOS ANGELES, CA 90017
213-418-0201

LANDSCAPE ARCHITECT
LYNN CAPOUYA, INC.
17992 MITCHELL SOUTH, #110
IRVINE, CA 92614
949-756-0150

LABORATORY CONSULTANT
RESEARCH FACILITIES DESIGN
3965 FIFTH AVE. #400
SAN DIEGO, CA 92103
619-297-0159

SCIENCE CENTER
SANTA ANA COLLEGE

RANCHO SANTIAGO COMMUNITY COLLEGE DISTRICT

1530 W. 17TH ST.
SANTA ANA, CA 92706

SANTA ANA COLLEGE

I HEREBY CERTIFY THAT THIS PLAN, SPECIFICATION OR REPORT WAS PREPARED BY ME OR UNDER MY DIRECT SUPERVISION AND THAT I AM A DULY LICENSED ARCHITECT UNDER THE LAWS OF THE STATE OF CA.

NAME: JAMES G. MATSON
DATE: MAY 16, 2017
REGISTRATION NUMBER: C13036

NO	DESCRIPTION	DATE
2	Addendum 2	08-30-17

ISSUANCE HISTORY - THIS SHEET

DRAWN BY: Author | REVIEW BY: Approver

HGA NO: 3584-001-00

SECOND LEVEL PARTIAL PLAN

DATE: JULY 06, 2017

LF2.02B

ADDENDA PACKAGE

© COPYRIGHT HAMMEL, GREEN AND ABRAHAMSON, INC.

Author 8/30/2017 3:39:22 PM C:\Users\mrico\Documents\LF-CENTRAL-SAC-2016_mrico@rfd.com.rvt

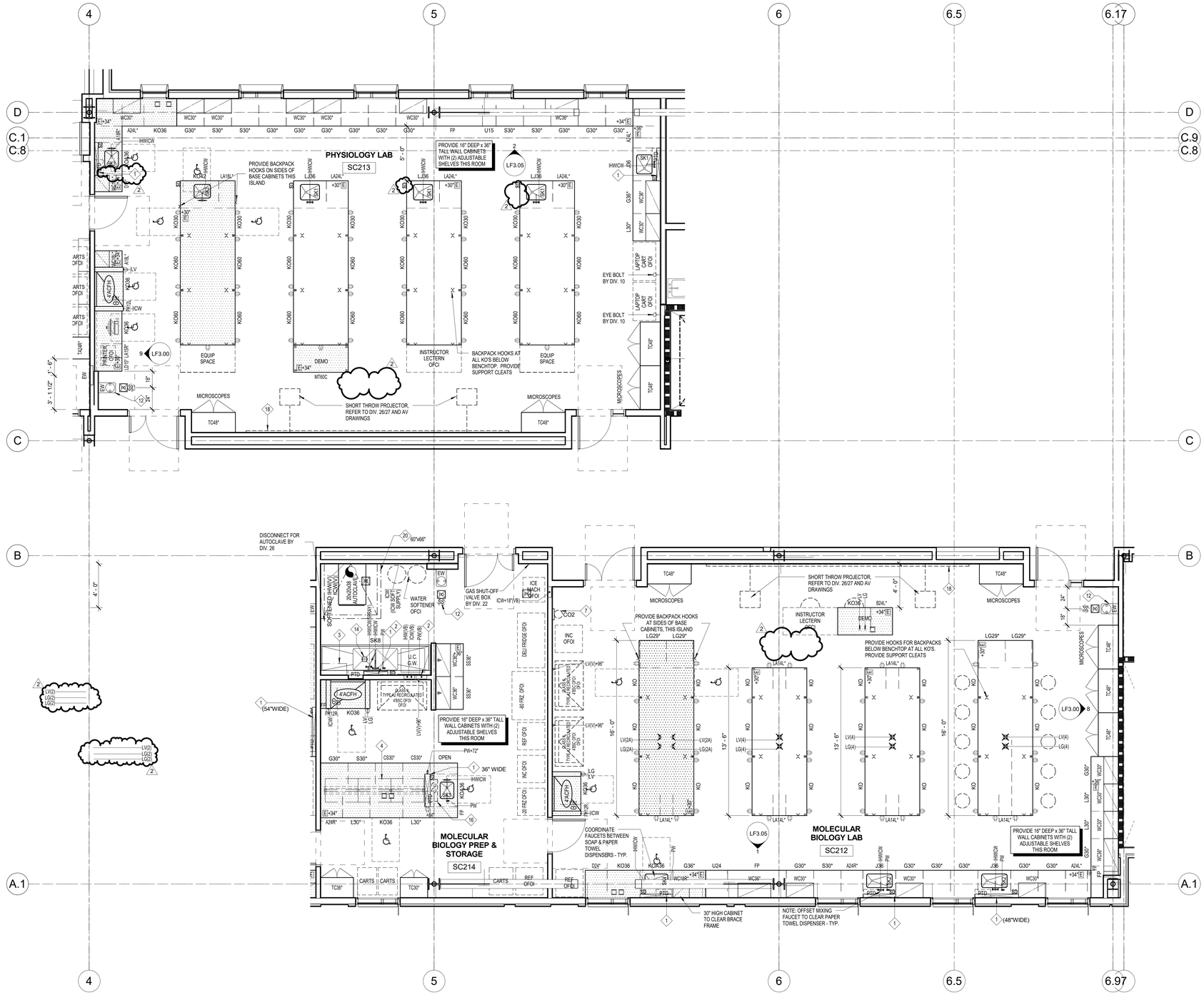

1 SECOND LEVEL PARTIAL PLAN
1/4" = 1'-0"

HGA
1918 Main Street, Third Floor
Santa Monica, California 90405
Telephone 310.557.7600

STRUCTURAL ENGINEER
SAIFUL BOUQUET
155 N LAKE AVE
PASADENA, CA 91101
626-304-2616

MECHANICAL & PLUMBING ENGINEER
STANTEC CONSULTING INC
14130 RIVERSIDE DR. # 201
SHERMAN OAKS, CA 91423
818-377-8220

ELECTRICAL ENGINEER
FBA ENGINEERING
150 PAULARINO AVE. #A120
COSTA MESA, CA 92626
949-852-9995

CIVIL ENGINEER
KPFF CONSULTING ENGINEERS
700 SOUTH FLOWER ST. #2100
LOS ANGELES, CA 90017
213-418-0201

LANDSCAPE ARCHITECT
LYNN CAPOUYA, INC.
17992 MITCHELL SOUTH, #110
IRVINE, CA 92614
949-756-0150

LABORATORY CONSULTANT
RESEARCH FACILITIES DESIGN
3965 FIFTH AVE. #400
SAN DIEGO, CA 92103
619-297-0159

SCIENCE CENTER
SANTA ANA COLLEGE
RANCHO SANTIAGO COMMUNITY COLLEGE DISTRICT
1530 W. 17TH ST.
SANTA ANA, CA 92706

SANTA ANA COLLEGE

I HEREBY CERTIFY THAT THIS PLAN, SPECIFICATION OR REPORT WAS PREPARED BY ME OR UNDER MY DIRECT SUPERVISION AND THAT I AM A DULY LICENSED ARCHITECT UNDER THE LAWS OF THE STATE OF CA

LICENSED ARCHITECT JAMES G. MATSON No. C13036 REGISTERED 10-31-2017 VENTURA, CA 93001 STATE OF CALIFORNIA

LICENSED ARCHITECT SAN TOMAS No. C-14749 REN 9-30-2017 STATE OF CALIFORNIA

NAME: JAMES G. MATSON
DATE: MAY 16, 2017
REGISTRATION NUMBER: C13036

NO	DESCRIPTION	DATE
2	Addendum 2	08-30-17

ISSUANCE HISTORY - THIS SHEET

DRAWN BY: Author | REVIEW BY: Approver

HGA NO: 3584-001-00

SECOND LEVEL PARTIAL PLAN

DATE: JULY 06, 2017

LF2.02C

ADDENDA PACKAGE

© COPYRIGHT HAMMEL, GREEN AND ABRAHAMSON, INC.

Author 8/30/2017 3:39:27 PM C:\Users\mrico\Documents\LF-CENTRAL-SAC-2016_mrico@rfd.com.rvt

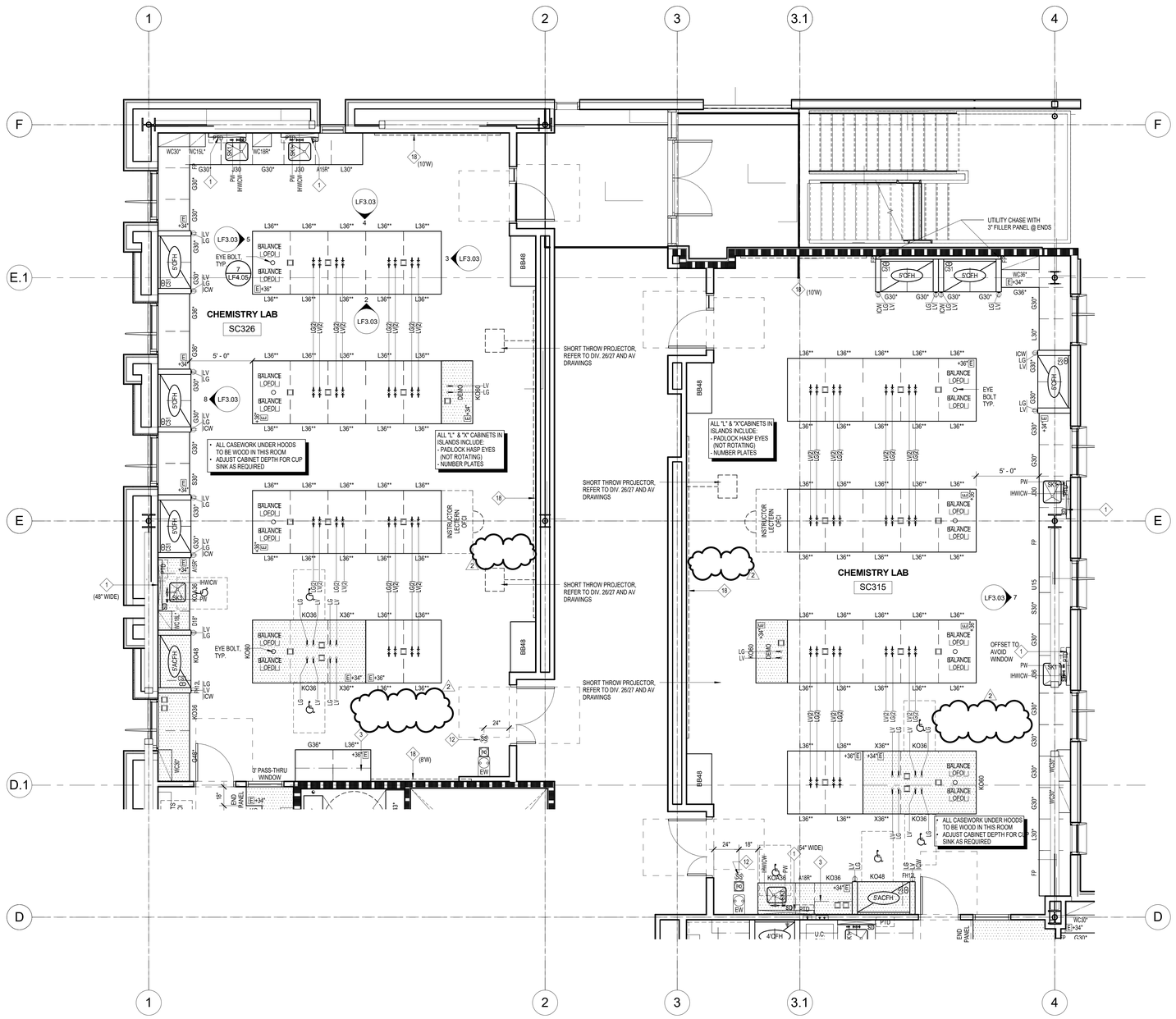

1 THIRD LEVEL PARTIAL PLAN
1/4" = 1'-0"

hga.
1918 Main Street, Third Floor
Santa Monica, California 90405
Telephone 310.557.7600

STRUCTURAL ENGINEER
SAIFUL BOUQUET
155 N LAKE AVE
PASADENA, CA 91101
626-304-2616

MECHANICAL & PLUMBING ENGINEER
STANTEC CONSULTING INC
14130 RIVERSIDE DR. # 201
SHERMAN OAKS, CA 91423
818-377-8220

ELECTRICAL ENGINEER
FBA ENGINEERING
150 PAULARINO AVE. #A120
COSTA MESA, CA 92626
949-852-9995

CIVIL ENGINEER
KPFF CONSULTING ENGINEERS
700 SOUTH FLOWER ST. #2100
LOS ANGELES, CA 90017
213-418-0201

LANDSCAPE ARCHITECT
LYNN CAPOUYA, INC.
17992 MITCHELL SOUTH, #110
IRVINE, CA 92614
949-756-0150

LABORATORY CONSULTANT
RESEARCH FACILITIES DESIGN
3965 FIFTH AVE. #400
SAN DIEGO, CA 92103
619-297-0159

SCIENCE CENTER
SANTA ANA COLLEGE
RANCHO SANTIAGO COMMUNITY COLLEGE DISTRICT
1530 W. 17TH ST.
SANTA ANA, CA 92706

SANTA ANA COLLEGE

I HEREBY CERTIFY THAT THIS PLAN, SPECIFICATION OR REPORT WAS PREPARED BY ME OR UNDER MY DIRECT SUPERVISION AND THAT I AM A DULY LICENSED ARCHITECT UNDER THE LAWS OF THE STATE OF CA

NAME: JAMES G. MATSON
DATE: MAY 16, 2017
REGISTRATION NUMBER: C13036

NO	DESCRIPTION	DATE
2	Addendum 2	08-30-17

ISSUANCE HISTORY - THIS SHEET

DRAWN BY: Author | REVIEW BY: Approver

HGA NO: 3584-001-00

THIRD LEVEL PARTIAL PLAN

DATE: JULY 06, 2017

LF2.03A ADDENDA PACKAGE

© COPYRIGHT HAMMEL, GREEN AND ABRAHAMSON, INC.

Author 8/30/2017 3:39:32 PM C:\Users\mricci\Documents\LF-CENTRAL-SAC-2016_mricci@hkf.com.rvt

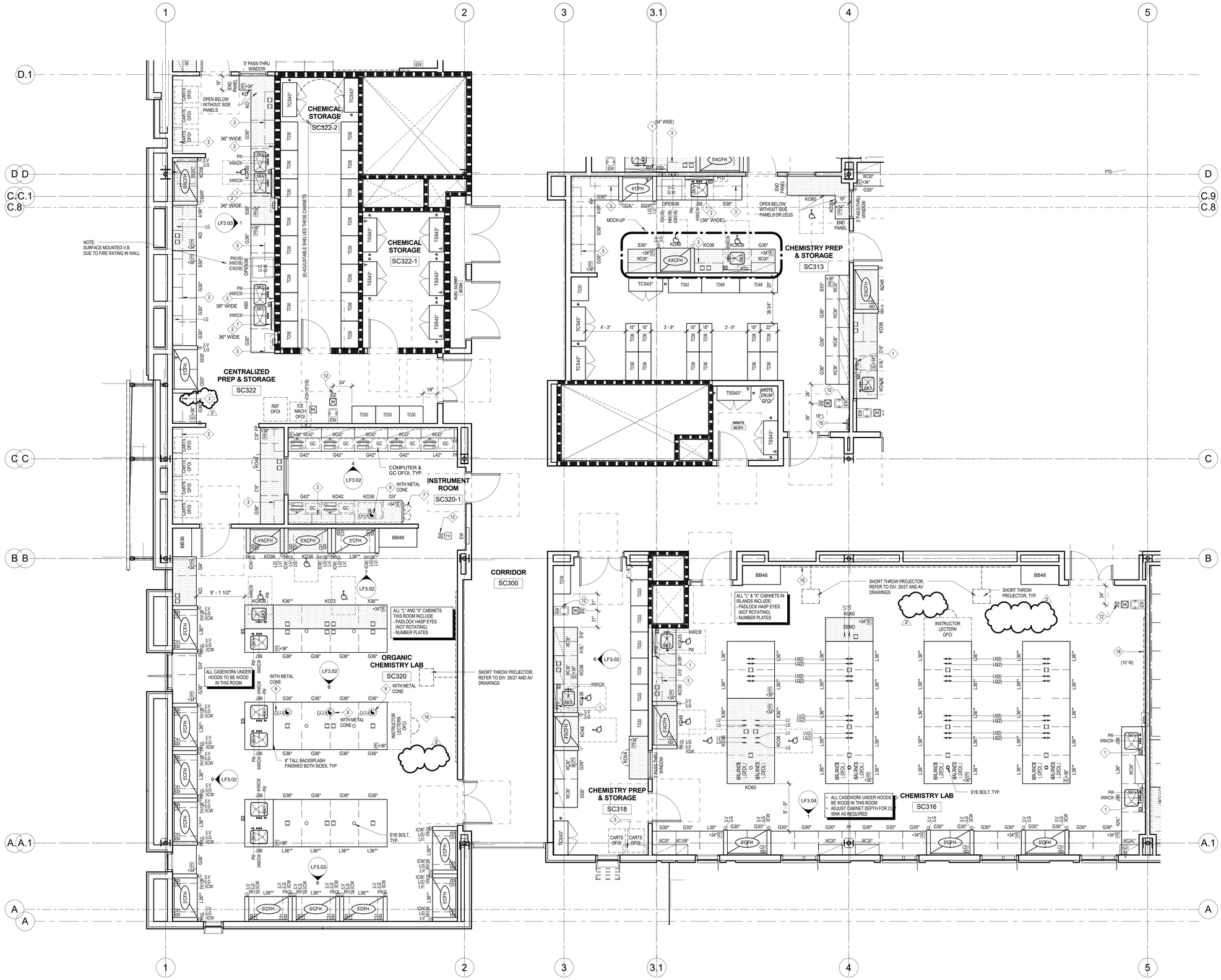

1 THIRD LEVEL PARTIAL PLAN
1/4" = 1'-0"

HGA
1918 Main Street, Third Floor
Santa Monica, California 90405
Telephone 310.557.7600

STRUCTURAL ENGINEER
SAIFUL BOUQUET
155 N LAKE AVE
PASADENA, CA 91101
626-304-2616

MECHANICAL & PLUMBING ENGINEER
STANTEC CONSULTING INC
14130 RIVERSIDE DR. # 201
SHERMAN OAKS, CA 91423
818-377-8220

ELECTRICAL ENGINEER
FBA ENGINEERING
150 PAULARINO AVE. #A120
COSTA MESA, CA 92626
949-852-9995

CIVIL ENGINEER
KPFF CONSULTING ENGINEERS
700 SOUTH FLOWER ST. #2100
LOS ANGELES, CA 90017
213-418-0201

LANDSCAPE ARCHITECT
LYNN CAPOUYA, INC.
17992 MITCHELL SOUTH, #110
IRVINE, CA 92614
949-756-0150

LABORATORY CONSULTANT
RESEARCH FACILITIES DESIGN
3965 FIFTH AVE. #400
SAN DIEGO, CA 92103
619-297-0159

SCIENCE CENTER
SANTA ANA COLLEGE
RANCHO SANTIAGO COMMUNITY COLLEGE DISTRICT
1530 W. 17TH ST.
SANTA ANA, CA 92706

SANTA ANA COLLEGE

I HEREBY CERTIFY THAT THIS PLAN, SPECIFICATION OR REPORT WAS PREPARED BY ME OR UNDER MY DIRECT SUPERVISION AND THAT I AM A DULY LICENSED ARCHITECT UNDER THE LAWS OF THE STATE OF CA.

NAME: JAMES G. MATSON
DATE: MAY 16, 2017
REGISTRATION NUMBER: C13036

NO	DESCRIPTION	DATE
2	Addendum 2	08-30-17

ISSUANCE HISTORY - THIS SHEET
DRAWN BY: Author | REVIEW BY: Approver

HGA NO: 3584-001-00

THIRD LEVEL PARTIAL PLAN

DATE: JULY 06, 2017

LF2.03B

ADDENDA PACKAGE

© COPYRIGHT HAMMEL, GREEN AND ABRAHAMSON, INC.

Author 8/30/2017 3:39:38 PM C:\Users\mrico\Documents\LF-CENTRAL-SAC-2016_mrico@rfd.com.rvt

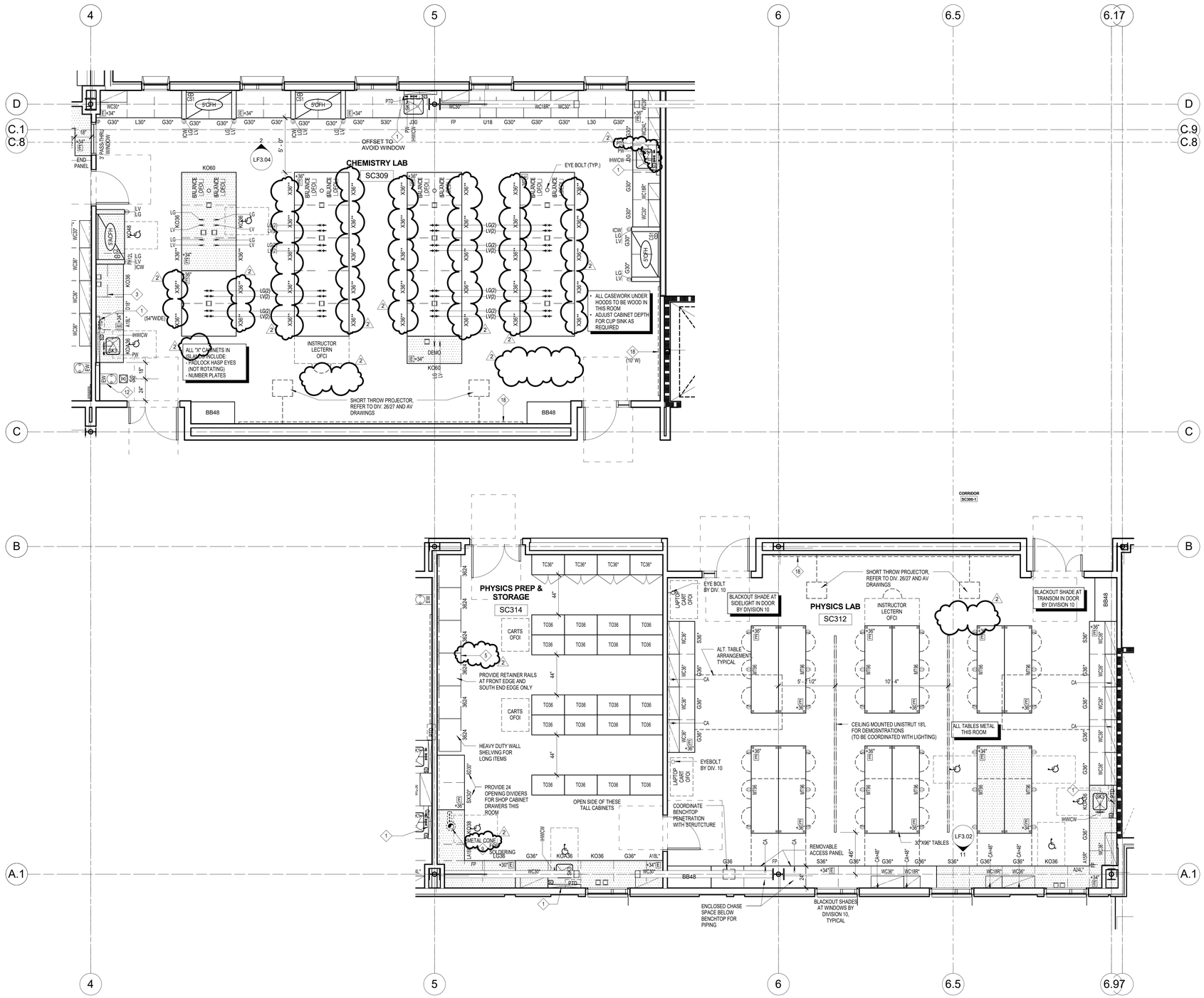

1 THIRD LEVEL PARTIAL PLAN
1/4" = 1'-0"

hga.
1918 Main Street, Third Floor
Santa Monica, California 90405
Telephone 310.557.7600

STRUCTURAL ENGINEER
SAIFUL BOUQUET
155 N LAKE AVE
PASADENA, CA 91101
626-304-2616

MECHANICAL & PLUMBING ENGINEER
STANTEC CONSULTING INC
14130 RIVERSIDE DR. # 201
SHERMAN OAKS, CA 91423
818-377-8220

ELECTRICAL ENGINEER
FBA ENGINEERING
150 PAULARINO AVE. #A120
COSTA MESA, CA 92626
949-852-9995

CIVIL ENGINEER
KPFF CONSULTING ENGINEERS
700 SOUTH FLOWER ST. #2100
LOS ANGELES, CA 90017
213-418-0201

LANDSCAPE ARCHITECT
LYNN CAPOUYA, INC.
17992 MITCHELL SOUTH, #110
IRVINE, CA 92614
949-756-0150

LABORATORY CONSULTANT
RESEARCH FACILITIES DESIGN
3965 FIFTH AVE. #400
SAN DIEGO, CA 92103
619-297-0159

SCIENCE CENTER
SANTA ANA COLLEGE

RANCHO SANTIAGO COMMUNITY COLLEGE DISTRICT

1530 W. 17TH ST.
SANTA ANA, CA 92706

SANTA ANA COLLEGE

I HEREBY CERTIFY THAT THIS PLAN, SPECIFICATION OR REPORT WAS PREPARED BY ME OR UNDER MY DIRECT SUPERVISION AND THAT I AM A DULY LICENSED ARCHITECT UNDER THE LAWS OF THE STATE OF CALIFORNIA

LICENSED ARCHITECT JAMES G. MATSON No. C13036 SEPTEMBER 30, 2017 RENEWAL DATE STATE OF CALIFORNIA

LICENSED ARCHITECT BRENT TOSHIO HAGIWARA No. C-27415 REN: 8-30-2017 STATE OF CALIFORNIA

NAME: JAMES G. MATSON
DATE: MAY 16, 2017
REGISTRATION NUMBER: C13036

NO	DESCRIPTION	DATE
2	Addendum 2	08-30-17

ISSUANCE HISTORY - THIS SHEET

DRAWN BY: Author | REVIEW BY: Approver

HGA NO: 3584-001-00

THIRD LEVEL PARTIAL PLAN

DATE: JULY 06, 2017

LF2.03C

DSA APPROVAL SET

© COPYRIGHT HAMMEL, GREEN AND ABRAHAMSON, INC.

Author 8/30/2017 3:39:43 PM C:\Users\mtos\Documents\F-CENTRAL-SAC-2016_mtos@sf.stant.vt

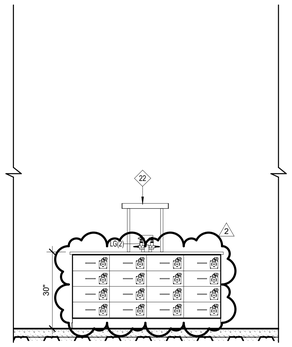

1 SC216_MICROBIOLOGY_01
1/2" = 1'-0"

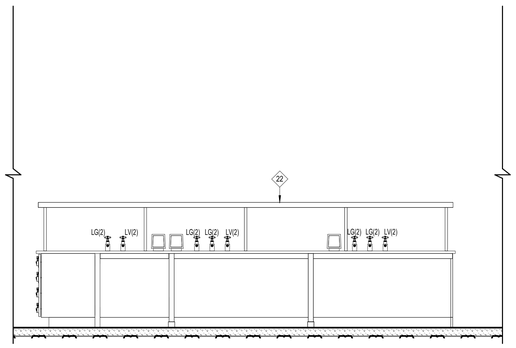

2 SC216_MICROBIOLOGY_02
1/2" = 1'-0"

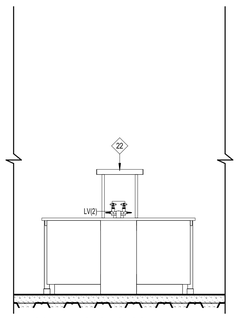

3 SC216_MICROBIOLOGY_03
1/2" = 1'-0"

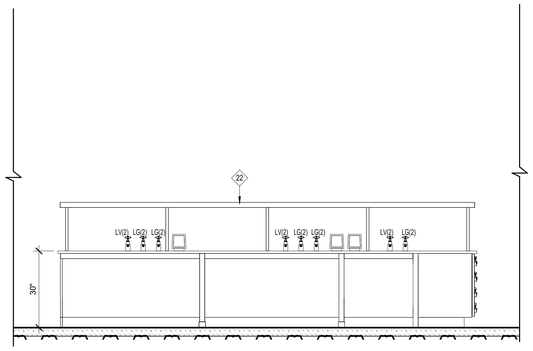

4 SC216_MICROBIOLOGY_04
1/2" = 1'-0"

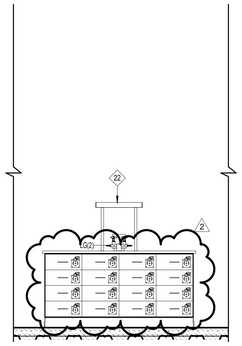

5 SC216_MICROBIOLOGY_05
1/2" = 1'-0"

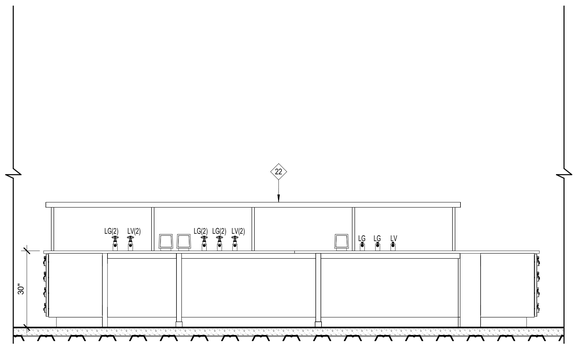

6 SC216_MICROBIOLOGY_06
1/2" = 1'-0"

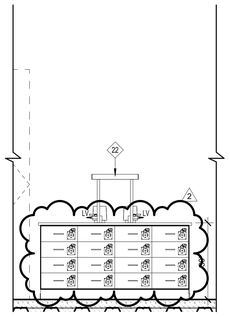

7 SC216_MICROBIOLOGY_07
1/2" = 1'-0"

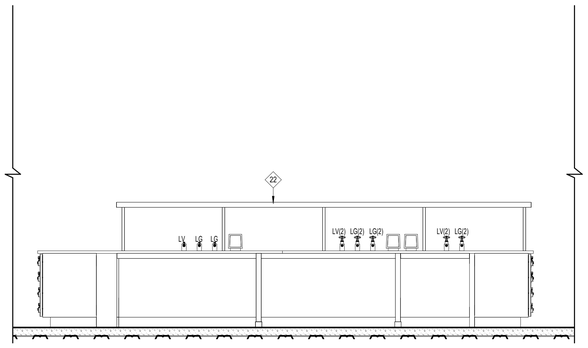

8 SC216_MICROBIOLOGY_08
1/2" = 1'-0"

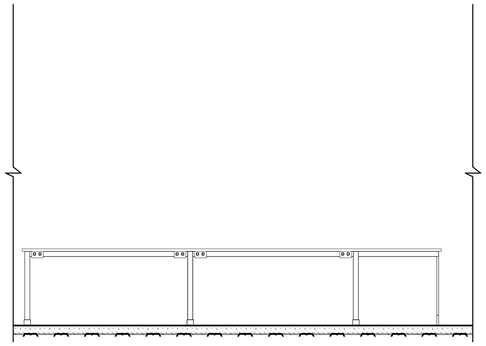

9 SC218 GENERAL BIOLOGY LAB_01
1/2" = 1'-0"

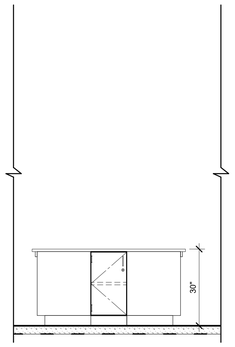

10 SC218 GENERAL BIOLOGY LAB_02
1/2" = 1'-0"

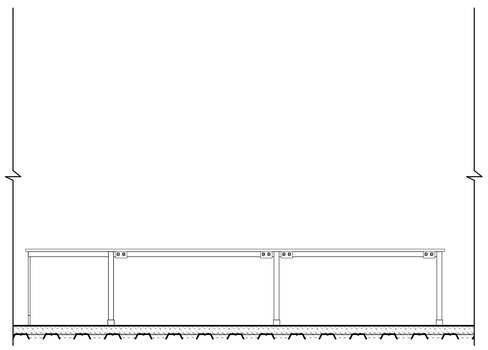

11 SC218 GENERAL BIOLOGY LAB_03
1/2" = 1'-0"

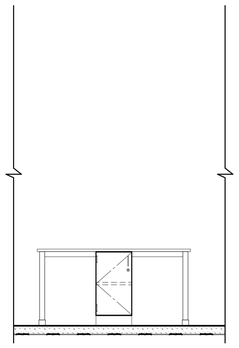

12 SC218 GENERAL BIOLOGY LAB_04
1/2" = 1'-0"

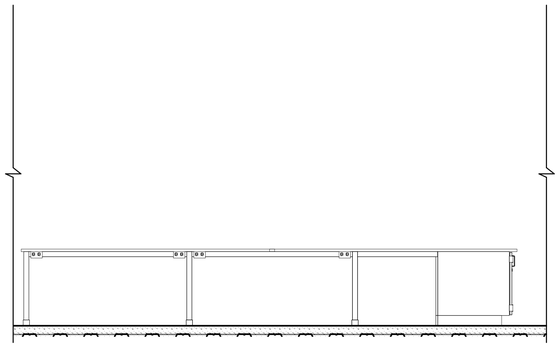

13 SC218 GENERAL BIOLOGY LAB_05
1/2" = 1'-0"

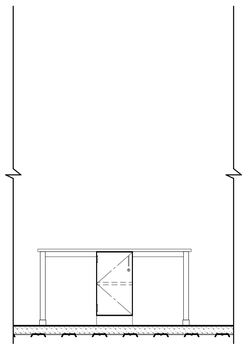

14 SC218 GENERAL BIOLOGY LAB_06
1/2" = 1'-0"

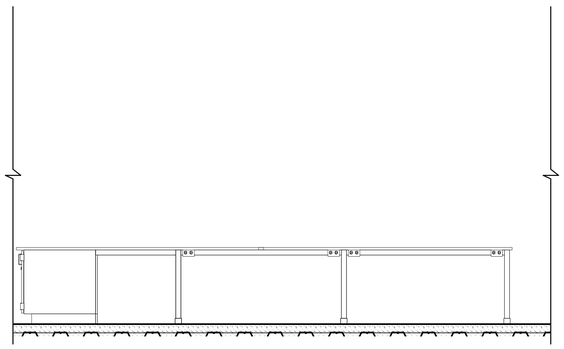

15 SC218 GENERAL BIOLOGY LAB_07
1/2" = 1'-0"

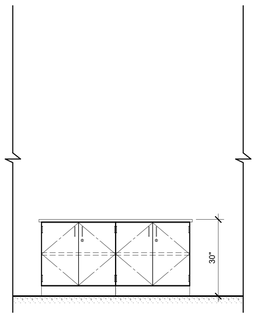

16 SC218 GENERAL BIOLOGY LAB_08
1/2" = 1'-0"

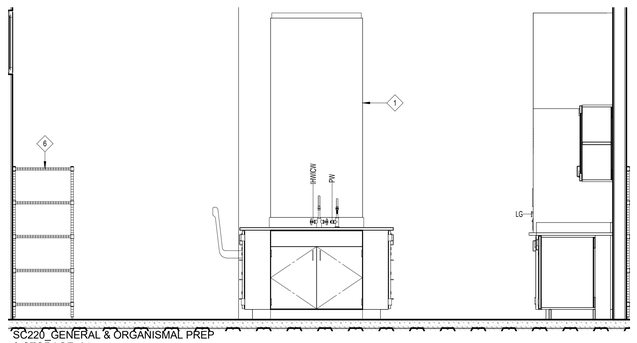

17 SC220_GENERAL & ORGANISMAL PREP & STORAGE_01
1/2" = 1'-0"

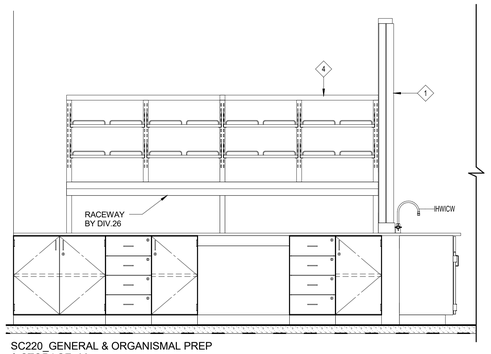

18 SC220_GENERAL & ORGANISMAL PREP & STORAGE_02
1/2" = 1'-0"

hga.
1918 Main Street, Third Floor
Santa Monica , California 90405
Telephone 310.557.7600

STRUCTURAL ENGINEER
SAIFUL BOUQUET
155 N LAKE AVE
PASADENA, CA 91101
626-304-2616

MECHANICAL & PLUMBING ENGINEER
STANTEC CONSULTING INC
14130 RIVERSIDE DR. # 201
SHERMAN OAKS, CA 91423
818-377-8220

ELECTRICAL ENGINEER
FBA ENGINEERING
150 PAULARINO AVE. #A120
COSTA MESA, CA 92626
949-852-9995

CIVIL ENGINEER
KPFF CONSULTING ENGINEERS
700 SOUTH FLOWER ST. #2100
LOS ANGELES, CA 90017
213-418-0201

LANDSCAPE ARCHITECT
LYNN CAPOUYA, INC.
17992 MITCHELL SOUTH, #110
IRVINE, CA 92614
949-756-0150

LABORATORY CONSULTANT
RESEARCH FACILITIES DESIGN
3965 FIFTH AVE. #400
SAN DIEGO, CA 92103
619-297-0159

SCIENCE CENTER
SANTA ANA COLLEGE
RANCHO SANTIAGO COMMUNITY COLLEGE DISTRICT

1530 W. 17TH ST.
SANTA ANA, CA 92706

SANTA ANA COLLEGE

I HEREBY CERTIFY THAT THIS PLAN, SPECIFICATION OR REPORT WAS PREPARED BY ME OR UNDER MY DIRECT SUPERVISION AND THAT I AM A DULY LICENSED ARCHITECT UNDER THE LAWS OF THE STATE OF CALIFORNIA

LICENSED ARCHITECT JAMES G. MATSON RENEWAL 31/2017 PROFESSIONAL SEAL STATE OF CALIFORNIA

LICENSED ARCHITECT KENT TOMITSUKA No. C13036 REN. 8-31-2017 STATE OF CALIFORNIA

NAME: JAMES G. MATSON
DATE: MAY 16, 2017
REGISTRATION NUMBER: C13036

NO	DESCRIPTION	DATE
2	Addendum 2	08-30-17

ISSUANCE HISTORY - THIS SHEET

DRAWN BY: Author | REVIEW BY: Approver

HGA NO: 3584-001-00

ELEVATIONS

DATE: JULY 06, 2017

LF3.01 ADDENDA PACKAGE

© COPYRIGHT HAMMEL, GREEN AND ABRAHAMSON, INC.

Author 8/30/2017 3:40:04 PM C:\Users\mricci\Documents\F-CENTRAL-SAC-2016_mricci@hd.com.rvt

NOTES:
1. FOR FUME HOOD PRE-PIPING REFER TO DETAIL 3 LF4.00
2. FOR FUME HOOD SAFETY LABEL REFER TO DETAIL 4 LF4.00
3. FOR ANCHORAGE DETAIL REFER TO: 8 LF4.06

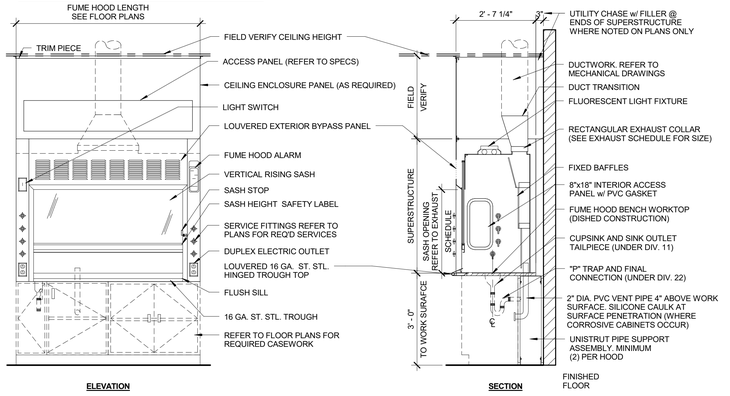

FUME HOOD - FLUSH SILL - VERTICAL SASH - (TYP.) 1/2" = 1'-0" 1

NOTES:
1. FOR FUME HOOD PRE-PIPING REFER TO DETAIL 3 LF4.00
2. FOR FUME HOOD SAFETY LABEL REFER TO DETAIL 4 LF4.00
3. WATER FITTING REQUIRED TO ALIGN WITH CENTER OF CUP SINK. COORDINATE WITH FUME HOOD AND BENCHTOP MANUFACTURER.
4. FOR ANCHORAGE DETAIL REFER TO: 8 LF4.06

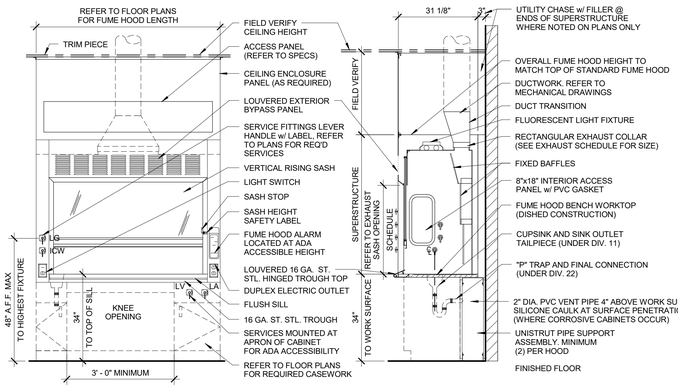

FUME HOOD - FLUSH SILL - ACCESSIBLE 1/2" = 1'-0" 2

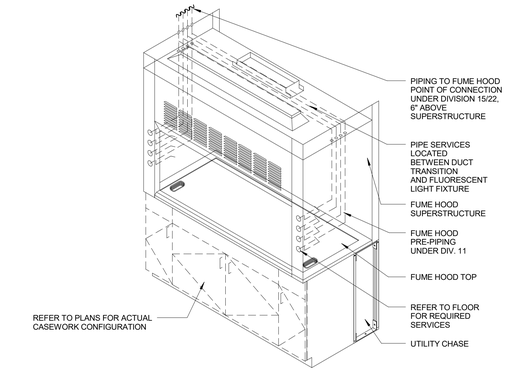

FUME HOOD - PRE-PIPING 1/2" = 1'-0" 3

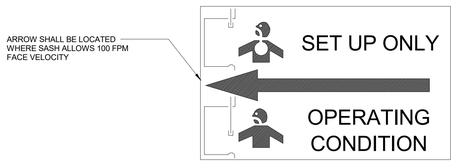

FUME HOOD - SAFETY LABEL 1/2" = 1'-0" 4

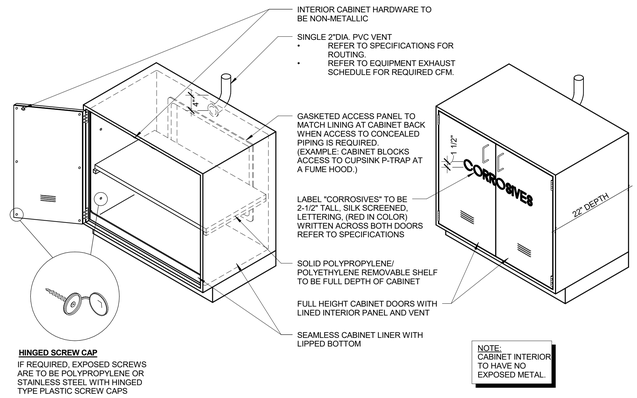

CW - CORROSIVE STORAGE CABINET 3/4" = 1'-0" 5

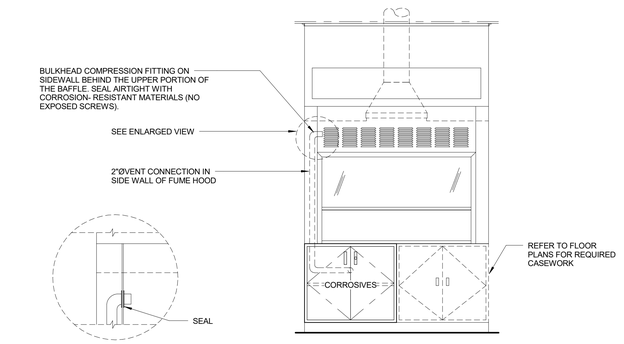

CS-CABINET VENTING 1/2" = 1'-0" 6

HGA
1918 Main Street, Third Floor
Santa Monica, California 90405
Telephone 310.557.7600

STRUCTURAL ENGINEER
SAIFUL BOUQUET
155 N LAKE AVE
PASADENA, CA 91101
626-304-2616

MECHANICAL & PLUMBING ENGINEER
STANTEC CONSULTING INC
14130 RIVERSIDE DR. # 201
SHERMAN OAKS, CA 91423
818-377-8220

ELECTRICAL ENGINEER
FBA ENGINEERING
150 PAULARINO AVE. #A120
COSTA MESA, CA 92626
949-852-9995

CIVIL ENGINEER
KPFF CONSULTING ENGINEERS
700 SOUTH FLOWER ST. #2100
LOS ANGELES, CA 90017
213-418-0201

LANDSCAPE ARCHITECT
LYNN CAPOUYA, INC.
17992 MITCHELL SOUTH, #110
IRVINE, CA 92614
949-756-0150

LABORATORY CONSULTANT
RESEARCH FACILITIES DESIGN
3965 FIFTH AVE. #400
SAN DIEGO, CA 92103
619-297-0159

SCIENCE CENTER
SANTA ANA COLLEGE

RANCHO SANTIAGO COMMUNITY COLLEGE DISTRICT

1530 W. 17TH ST.
SANTA ANA, CA 92706

SANTA ANA COLLEGE

I HEREBY CERTIFY THAT THIS PLAN, SPECIFICATION OR REPORT WAS PREPARED BY ME OR UNDER MY DIRECT SUPERVISION AND THAT I AM A DULY LICENSED ARCHITECT UNDER THE LAWS OF THE STATE OF CA

JAMES G. MATSON — LICENSED ARCHITECT — No. 17936 — STATE OF CALIFORNIA — EXPIRATION DATE: SEPTEMBER 30, 2017
LYNN TERRELL — LICENSED ARCHITECT — No. 32756 — STATE OF CALIFORNIA — REN 8-30-2017

NAME: JAMES G. MATSON
DATE: MAY 16, 2017
REGISTRATION NUMBER: C13036

NO	DESCRIPTION	DATE
2	Addendum 2	08-30-17

ISSUANCE HISTORY - THIS SHEET

DRAWN BY: Author | REVIEW BY: Approver

HGA NO: 3584-001-00

LABORATORY FURNISHING DETAILS

DATE: JULY 06, 2017

LF4.00

ADDENDA PACKAGE

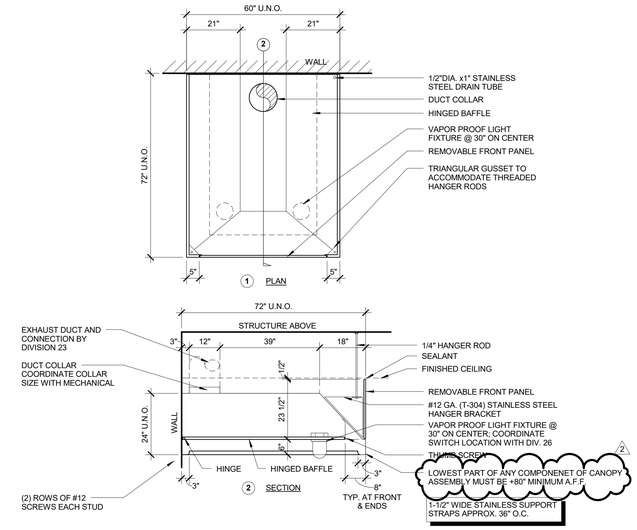

CANOPY HOOD ASSEMBLY 1/2" = 1'-0" 8

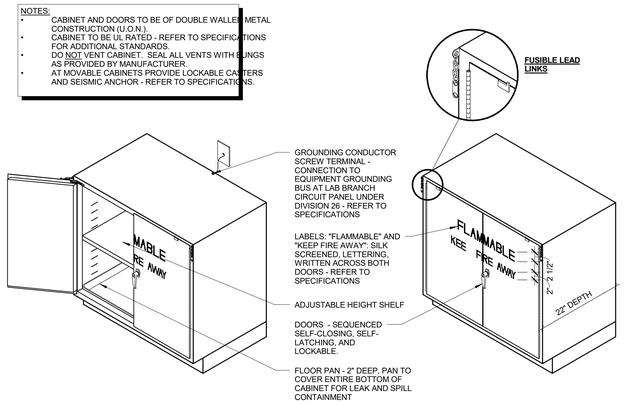

CW - SOLVENT STORAGE CABINET 3/4" = 1'-0" 7

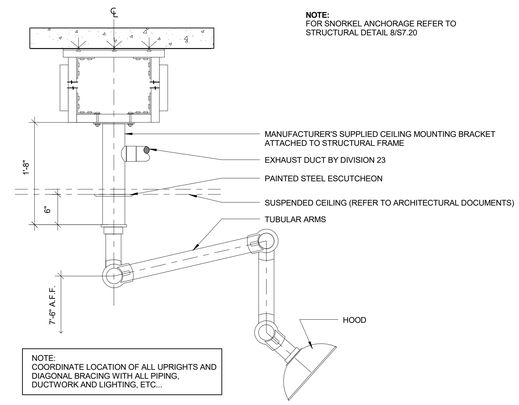

SNORKEL - CEILING MOUNTED 1" = 1'-0" 9

© COPYRIGHT HAMMEL, GREEN AND ABRAHAMSON, INC.

C:\Users\mricci\Documents\LF-CENTRAL-SAC2016_mricci@hga.com.rvt 8/30/2017 3:40:06 PM Author

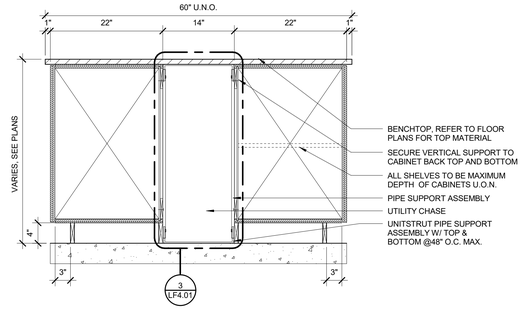

CW - CONVENTIONAL CASEWORK - ISLAND BENCH

1" = 1'-0" (1)

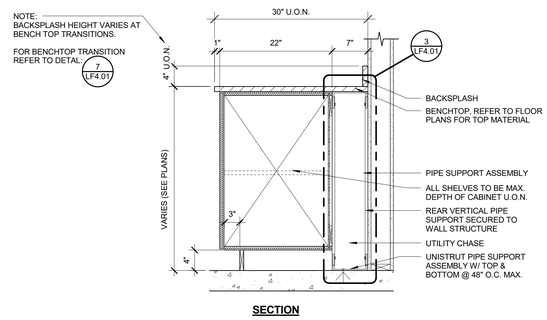

SECTION

CW - CONVENTIONAL CASEWORK - WALL BENCH

1" = 1'-0" (2)

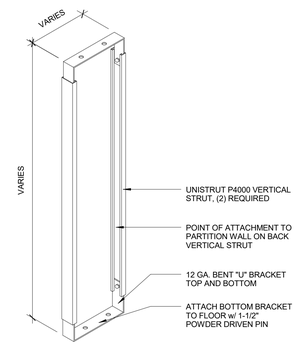

CW - UNISTRUT PIPE SUPPORT ASSEMBLY

1 1/2" = 1'-0" (3)

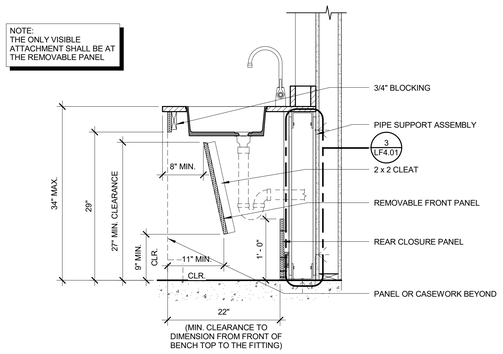

KO - KNEE OPENING - AT ACCESSIBLE SINK

1" = 1'-0" (4)

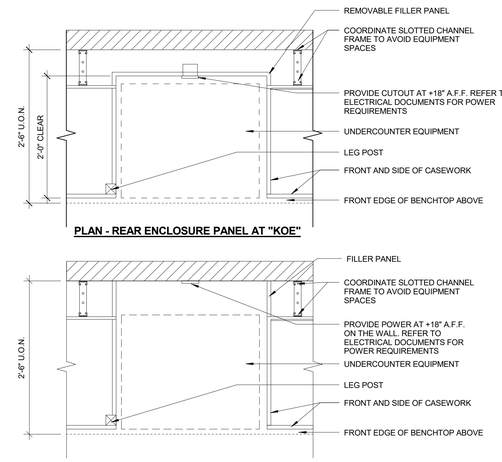

PLAN - REAR ENCLOSURE PANEL AT "KOE"

PLAN - NO ENCLOSURE PANEL AT "KOE"

PLAN - NO ENCLOSURE PANEL AT "KOO" (SAME AS KOE WITH NO ELECTRICAL OUTLET)

KO - KNEE OPENING - AT EQUIPMENT

1" = 1'-0" (5)

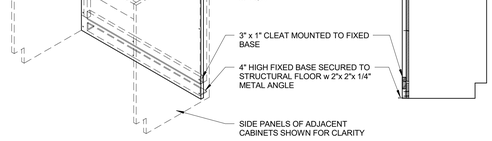

KO - KNEE OPENING - REAR PANEL

3/4" = 1'-0" (6)

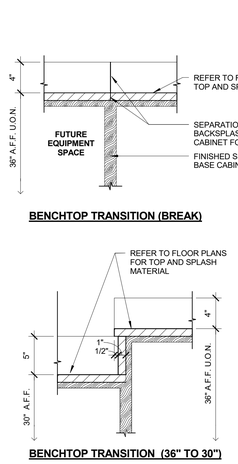

BENCHTOP TRANSITION (BREAK)

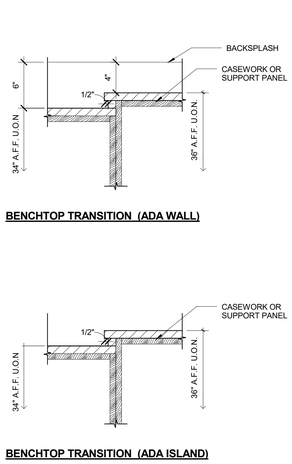

BENCHTOP TRANSITION (ADA WALL)

BENCHTOP TRANSITION (36" TO 30")

BENCHTOP TRANSITION (ADA ISLAND)

BT - BENCHTOP TRANSITIONS

1 1/2" = 1'-0" (7)

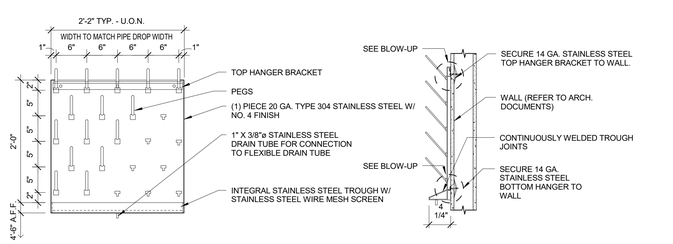

DRYING RACK ELEVATION

1"=1'-0"

SECTION @ WALL CONDITION

1"=1'-0"

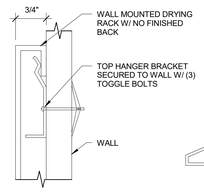

BLOW-UP @ TOP HANGER

3"=1'-0"

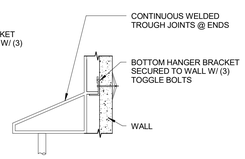

BLOW-UP @ BOTTOM HANGER

1-1/2"=1'-0"

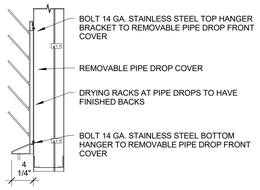

SECTION @ PIPE DROP

3"=1'-0"

DRYING RACK - STAINLESS STEEL

1" = 1'-0" (8)

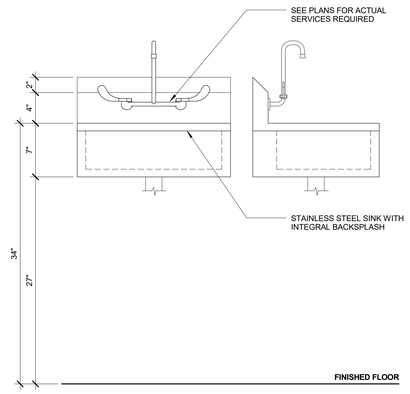

SINK - STAINLESS STEEL WALL HUNG

1 1/2" = 1'-0" (9)

hga.
1918 Main Street, Third Floor
Santa Monica, California 90405
Telephone 310.557.7600

STRUCTURAL ENGINEER
SAIFUL BOUQUET
155 N LAKE AVE
PASADENA, CA 91101
626-304-2616

MECHANICAL & PLUMBING ENGINEER
STANTEC CONSULTING INC
14130 RIVERSIDE DR. # 201
SHERMAN OAKS, CA 91423
818-377-8220

ELECTRICAL ENGINEER
FBA ENGINEERING
150 PAULARINO AVE. #A120
COSTA MESA, CA 92626
949-852-9995

CIVIL ENGINEER
KPFF CONSULTING ENGINEERS
700 SOUTH FLOWER ST. #2100
LOS ANGELES, CA 90017
213-418-0201

LANDSCAPE ARCHITECT
LYNN CAPOUYA, INC.
17992 MITCHELL SOUTH, #110
IRVINE, CA 92614
949-756-0150

LABORATORY CONSULTANT
RESEARCH FACILITIES DESIGN
3965 FIFTH AVE. #400
SAN DIEGO, CA 92103
619-297-0159

SCIENCE CENTER

SANTA ANA COLLEGE

RANCHO SANTIAGO COMMUNITY COLLEGE DISTRICT

1530 W. 17TH ST.
SANTA ANA, CA 92706

SANTA ANA COLLEGE

I HEREBY CERTIFY THAT THIS PLAN, SPECIFICATION OR REPORT WAS PREPARED BY ME OR UNDER MY DIRECT SUPERVISION AND THAT I AM A DULY LICENSED ARCHITECT UNDER THE LAWS OF THE STATE OF CA.

LICENSED ARCHITECT JAMES G. MATSON REGISTERED PROFESSIONAL ENGINEER SEPTEMBER 30, 2017 RENEWAL DATE STATE OF CALIFORNIA

LICENSED ARCHITECT KENT TORGERSON REN. 8-30-2017 STATE OF CALIFORNIA

NAME: JAMES G. MATSON
DATE: MAY 16, 2017
REGISTRATION NUMBER: C13036

NO	DESCRIPTION	DATE
2	Addendum 2	08-30-17

ISSUANCE HISTORY - THIS SHEET

DRAWN BY: Author | REVIEW BY: Approver

HGA NO: 3584-001-00

LABORATORY FURNISHING DETAILS

DATE: JULY 06, 2017

LF4.01

ADDENDA PACKAGE

© COPYRIGHT HAMMEL, GREEN AND ABRAHAMSON, INC.

8/30/2017 3:40:10 PM C:\Users\mroot\Documents\F-CENTRAL-SAC-2016_mroot@def.com.rvt Author

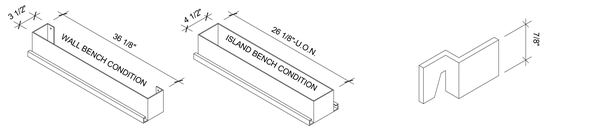

CEILING COLLAR - ISOMETRIC
SCALE: 1"=1'-0"

16 GA. Z-CLIP - ISOMETRIC
SCALE: 6"=1'-0"

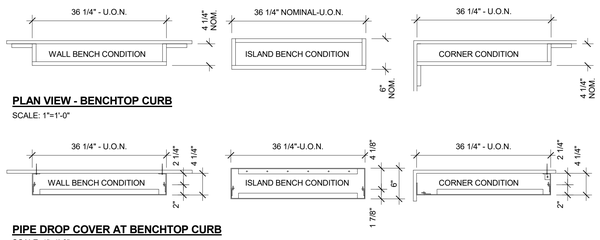

PLAN VIEW - BENCHTOP CURB
SCALE: 1"=1'-0"

PIPE DROP COVER AT BENCHTOP CURB
SCALE: 1"=1'-0"

PIPE DROP - DETAILS
1" = 1'-0" (1)

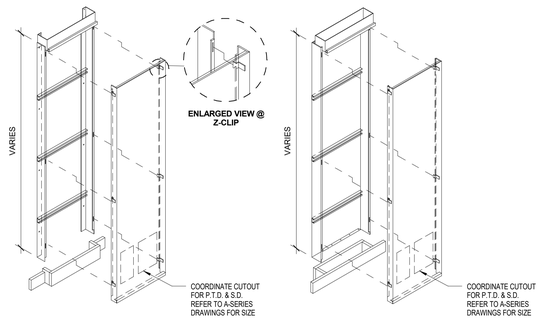

ISOMETRIC @ WALL BENCH CONDITION

ISOMETRIC @ ISLAND BENCH CONDITION

PIPE DROP - ENCLOSURE ASSEMBLY
1/2" = 1'-0" (2)

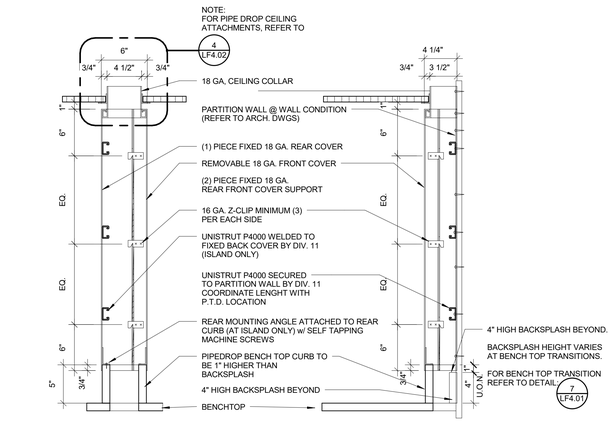

ISLAND BENCH CONDITION

WALL BENCH CONDITION

PIPE DROP - SECTIONS
1 1/2" = 1'-0" (3)

1918 Main Street, Third Floor
Santa Monica, California 90405
Telephone 310.557.7600

STRUCTURAL ENGINEER
SAIFUL BOUQUET
155 N LAKE AVE
PASADENA, CA 91101
626-304-2616

MECHANICAL & PLUMBING ENGINEER
STANTEC CONSULTING INC
14130 RIVERSIDE DR. # 201
SHERMAN OAKS, CA 91423
818-377-8220

ELECTRICAL ENGINEER
FBA ENGINEERING
150 PAULARINO AVE. #A120
COSTA MESA, CA 92626
949-852-9995

CIVIL ENGINEER
KPFF CONSULTING ENGINEERS
700 SOUTH FLOWER ST. #2100
LOS ANGELES, CA 90017
213-418-0201

LANDSCAPE ARCHITECT
LYNN CAPOUYA, INC.
17992 MITCHELL SOUTH, #110
IRVINE, CA 92614
949-756-0150

LABORATORY CONSULTANT
RESEARCH FACILITIES DESIGN
3965 FIFTH AVE. #400
SAN DIEGO, CA 92103
619-297-0159

SCIENCE CENTER
SANTA ANA COLLEGE
RANCHO SANTIAGO COMMUNITY COLLEGE DISTRICT

1530 W. 17TH ST.
SANTA ANA, CA 92706

SANTA ANA COLLEGE

I HEREBY CERTIFY THAT THIS PLAN, SPECIFICATION OR REPORT WAS PREPARED BY ME, OR UNDER MY DIRECT SUPERVISION AND THAT I AM A DULY LICENSED ARCHITECT UNDER THE LAWS OF THE STATE OF CA.

JAMES G. MATSON — LICENSED ARCHITECT — No. C13036 — SEPTEMBER 30, 2017 — RENEWAL DATE — STATE OF CALIFORNIA

STEVEN THOMAS — LICENSED ARCHITECT — No. C-31743 — REN. 8-30-2017 — STATE OF CALIFORNIA

NAME: JAMES G. MATSON
DATE: MAY 16, 2017
REGISTRATION NUMBER: C13036

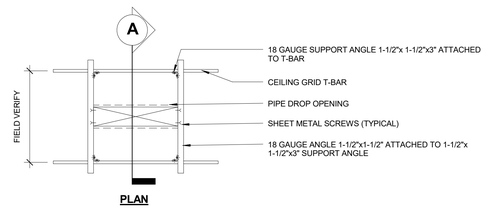

PLAN

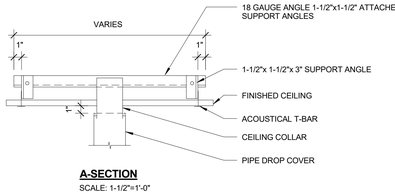

A-SECTION
SCALE: 1-1/2"=1'-0"

PIPE DROP - CEILING ATTACHMENT AT ISLAND BENCH
3/4" = 1'-0" (4)

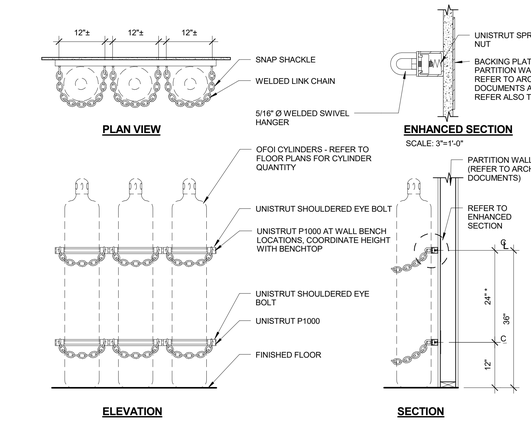

PLAN VIEW

ENHANCED SECTION
SCALE: 3"=1'-0"

ELEVATION

SECTION

CYLINDER RESTRAINT
3/4" = 1'-0" (5)

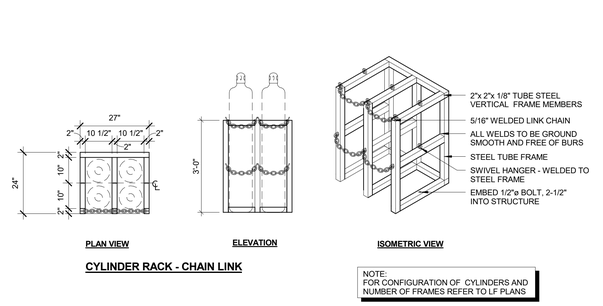

PLAN VIEW **ELEVATION** **ISOMETRIC VIEW**

CYLINDER RACK - CHAIN LINK

NOTE:
FOR CONFIGURATION OF CYLINDERS AND NUMBER OF FRAMES REFER TO LF PLANS

CYLINDER RACK ASSEMBLY
1/2" = 1'-0" (6)

NO	DESCRIPTION	DATE
2	Addendum 2	08-30-17

ISSUANCE HISTORY - THIS SHEET

DRAWN BY: Author | REVIEW BY: Approver

HGA NO: 3584-001-00

LABORATORY FURNISHING DETAILS

DATE: JULY 06, 2017

LF4.02

ADDENDA PACKAGE

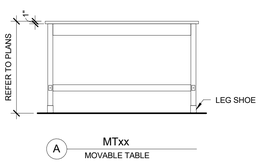

MOVABLE TABLE - TYPES
1/2" = 1'-0" (7)

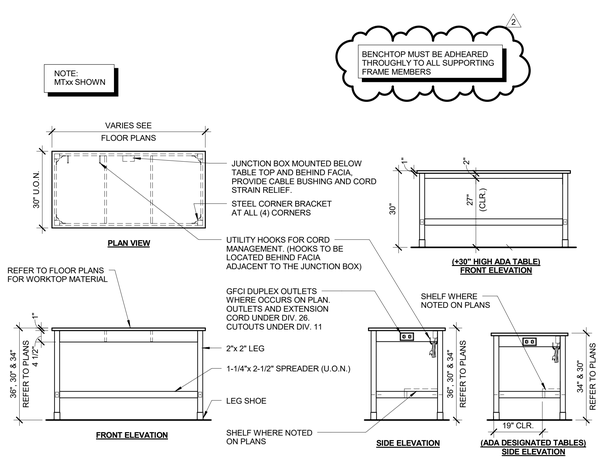

PLAN VIEW

(+30" HIGH ADA TABLE) FRONT ELEVATION

FRONT ELEVATION

SIDE ELEVATION

(ADA DESIGNATED TABLES) SIDE ELEVATION

MOVABLE TABLE
1/2" = 1'-0" (8)

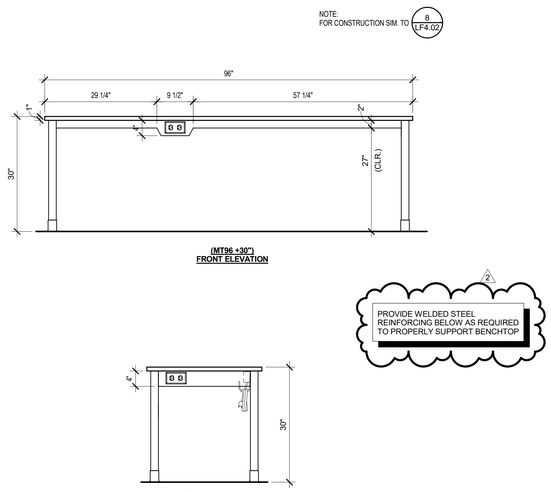

(MT96 +30") FRONT ELEVATION

END VIEW

MOVABLE TABLE 30" TALL - MT96
3/4" = 1'-0" (9)

© COPYRIGHT HAMMEL, GREEN AND ABRAHAMSON, INC.

8/30/2017 3:40:13 PM C:\Users\mrios\Documents\LF-CENTRAL-SAC2016_mrios@hga.com.rvt Author

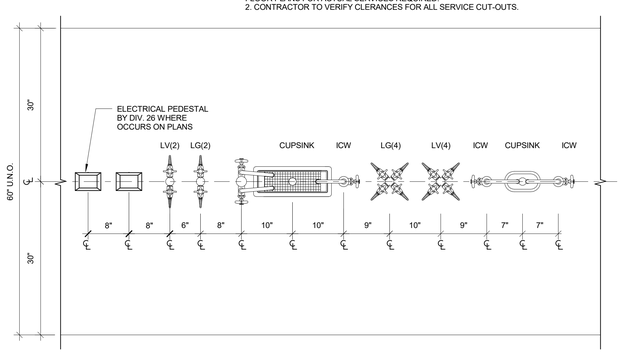

PLAN VIEW

FIXTURE SPACING - BENCH ISLAND 1" = 1'-0" 1

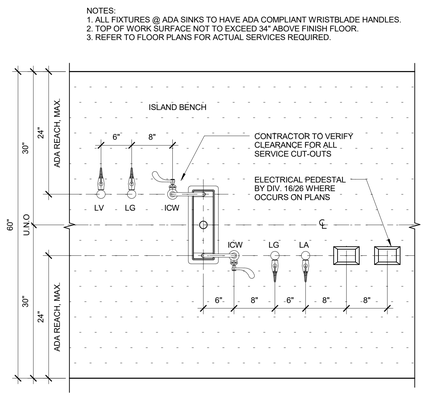

PLAN VIEW

FIXTURE SPACING - BENCH ISLAND (ADA) 1" = 1'-0" 2

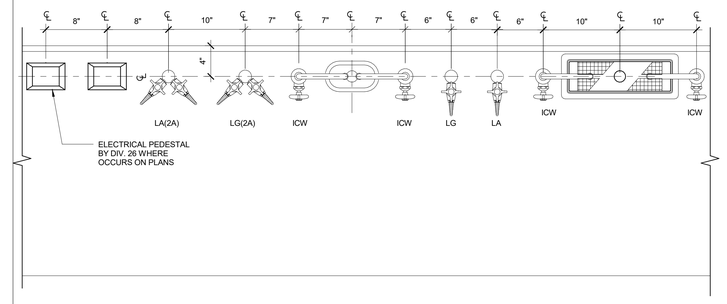

PLAN VIEW

NOTE:
1. FIXTURE SPACING REPRESENT TYPICAL CONFIGURATIONS. REFER TO FLOOR PLANS FOR ACTUAL SERVICES REQUIRED.
2. CONTRACTOR TO VERIFY CLERANCES FOR ALL SERVICE CUT-OUTS.
3. REFER TO FLOOR PLANS FOR ACTUAL SERVICES REQUIRED.
4. REFER TO PLANS AND SINK SCHEDULE FOR SINK TYPES AND SIZES.

FIXTURE SPACING - BENCH WALL 1 1/2" = 1'-0" 3

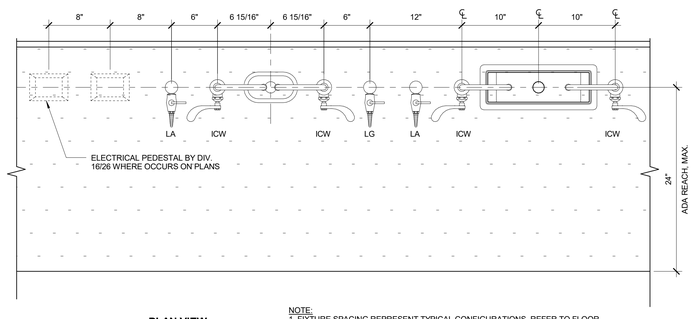

PLAN VIEW

NOTE:
1. FIXTURE SPACING REPRESENT TYPICAL CONFIGURATIONS. REFER TO FLOOR PLANS FOR ACTUAL SERVICES REQUIRED.
2. CONTRACTOR TO VERIFY CLERANCES FOR ALL SERVICE CUT-OUTS.
3. REFER TO FLOOR PLANS FOR ACTUAL SERVICES REQUIRED.
4. REFER TO PLANS AND SINK SCHEDULE FOR SINK TYPES AND SIZES.
5. PIPE DROP CUT-OUTS AS OCCURS ON PLANS
6. ALL FIXTURES @ ADA SINKS TO HAVE ADA COMPLIANT WRISTBLADE HANDLES.
7. WRIST BLADES SHOWN IN THE "OPEN" POSITION.
8. TOP OF WORK SURFACE NOT TO EXCEED 34" ABOVE FINISH FLOOR.

FIXTURE SPACING - BENCH WALL (ADA) 1 1/2" = 1'-0" 4

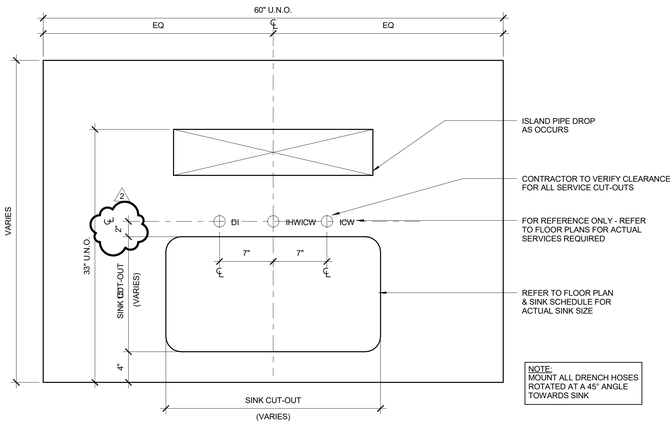

PLAN VIEW

FIXTURE SPACING - SINK AT ISLAND BENCH 1 1/2" = 1'-0" 5

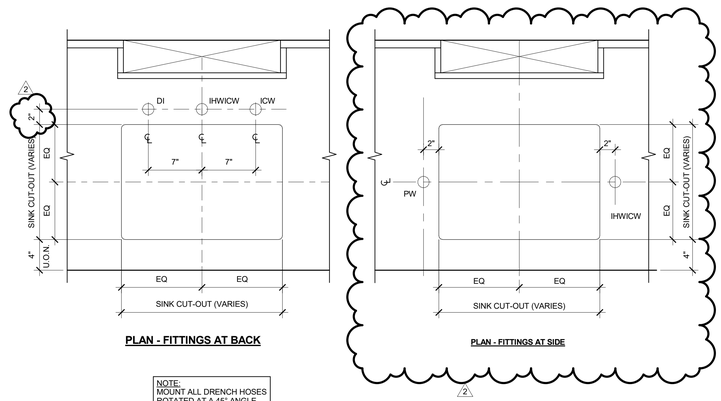

PLAN - FITTINGS AT BACK

PLAN - FITTINGS AT SIDE

NOTE: MOUNT ALL DRENCH HOSES ROTATED AT A 45° ANGLE TOWARDS SINK

NOTE:
1. FIXTURE SPACING REPRESENT TYPICAL CONFIGURATIONS. REFER TO FLOOR PLANS FOR ACTUAL SERVICES REQUIRED.
2. CONTRACTOR TO VERIFY CLERANCES FOR ALL SERVICE CUT-OUTS.
3. REFER TO PLANS AND SINK SCHEDULE FOR SINK TYPES AND SIZES.
4. PIPE DROP CUT-OUTS AS OCCURS ON PLANS

FIXTURE SPACING - SINK AT WALL BENCH 1 1/2" = 1'-0" 6

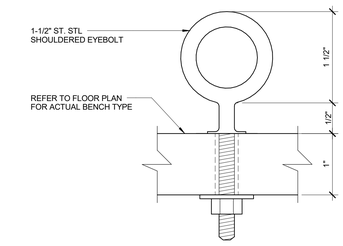

EYEBOLT AT ISLAND BENCHES 12" = 1'-0" 7

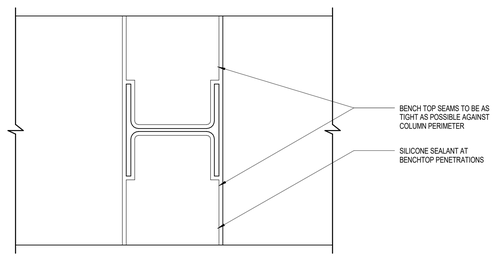

BENCHTOP SEAM @ EXPOSED COLUMN 1 1/2" = 1'-0" 8

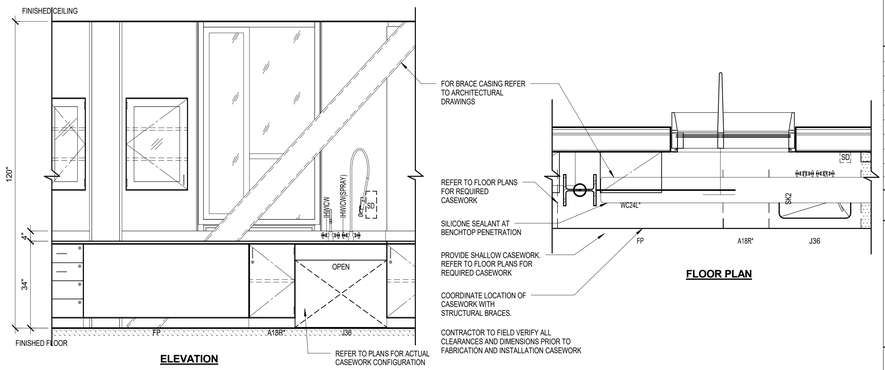

ELEVATION

FLOOR PLAN

BRACE FRAME PENETRATION AT BENCHTOP 1/2" = 1'-0" 9

HGA
1918 Main Street, Third Floor
Santa Monica, California 90405
Telephone 310.557.7600

STRUCTURAL ENGINEER
SAIFUL BOUQUET
155 N LAKE AVE
PASADENA, CA 91101
626-304-2616

MECHANICAL & PLUMBING ENGINEER
STANTEC CONSULTING INC
14130 RIVERSIDE DR. # 201
SHERMAN OAKS, CA 91423
818-377-8220

ELECTRICAL ENGINEER
FBA ENGINEERING
150 PAULARINO AVE. #A120
COSTA MESA, CA 92626
949-852-9995

CIVIL ENGINEER
KPFF CONSULTING ENGINEERS
700 SOUTH FLOWER ST. #2100
LOS ANGELES, CA 90017
213-418-0201

LANDSCAPE ARCHITECT
LYNN CAPOUYA, INC.
17992 MITCHELL SOUTH, #110
IRVINE, CA 92614
949-756-0150

LABORATORY CONSULTANT
RESEARCH FACILITIES DESIGN
3965 FIFTH AVE. #400
SAN DIEGO, CA 92103
619-297-0159

SCIENCE CENTER

SANTA ANA COLLEGE

RANCHO SANTIAGO COMMUNITY COLLEGE DISTRICT

1530 W. 17TH ST.
SANTA ANA, CA 92706

SANTA ANA COLLEGE

I HEREBY CERTIFY THAT THIS PLAN, SPECIFICATION OR REPORT WAS PREPARED BY ME OR UNDER MY DIRECT SUPERVISION AND THAT I AM A DULY LICENSED ARCHITECT UNDER THE LAWS OF THE STATE OF CA

JAMES G. MATSON — LICENSED ARCHITECT — No. C13036 — STATE OF CALIFORNIA — RENEWAL DATE: SEPTEMBER 30, 2017

KEN TORGERSEN — LICENSED ARCHITECT — No. C31744 — STATE OF CALIFORNIA — REN: 8-30-2017

NAME: JAMES G. MATSON
DATE: MAY 16, 2017
REGISTRATION NUMBER: C13036

NO	DESCRIPTION	DATE
2	Addendum 2	08-30-17

ISSUANCE HISTORY - THIS SHEET

DRAWN BY: Author REVIEW BY: Approver

HGA NO: 3584-001-00

LABORATORY FURNISHING DETAILS

DATE: JULY 06, 2017

LF4.05

ADDENDA PACKAGE

© COPYRIGHT HAMMEL, GREEN AND ABRAHAMSON, INC.

8/30/2017 3:40:14 PM C:\Users\mroot\Documents\F-CENTRAL-SAC-2016_mroot@hd.com.rvt Author

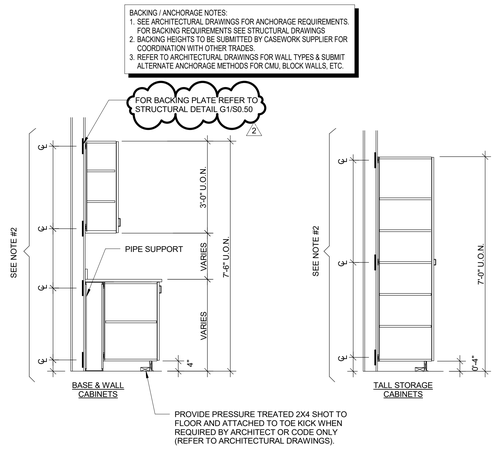

CW - BACKING HEIGHTS - CABINET

1/2" = 1'-0" (1)

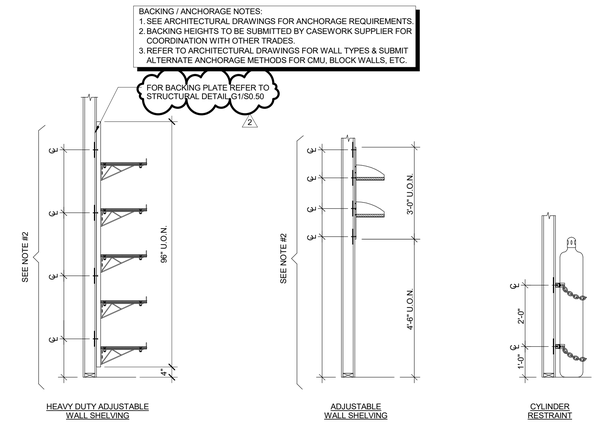

CW - BACKING HEIGHTS - SHELVING AND CYLINDER RESTRAINTS

1/2" = 1'-0" (2)

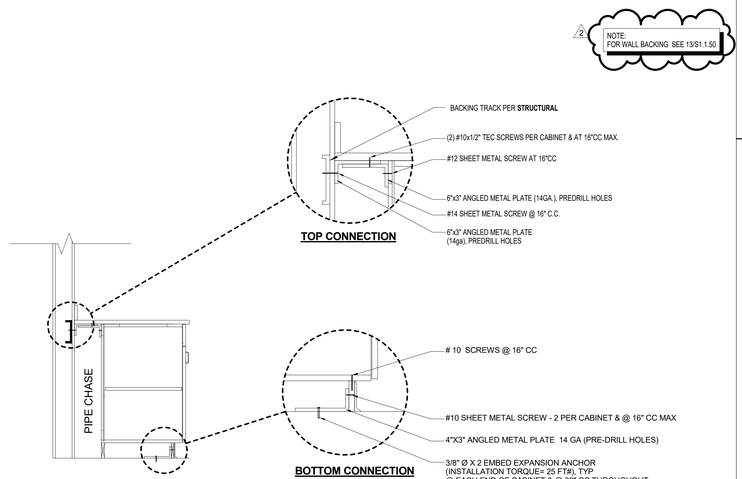

ANCHORAGE DETAIL - CASEWORK

1 1/2" = 1'-0" (3)

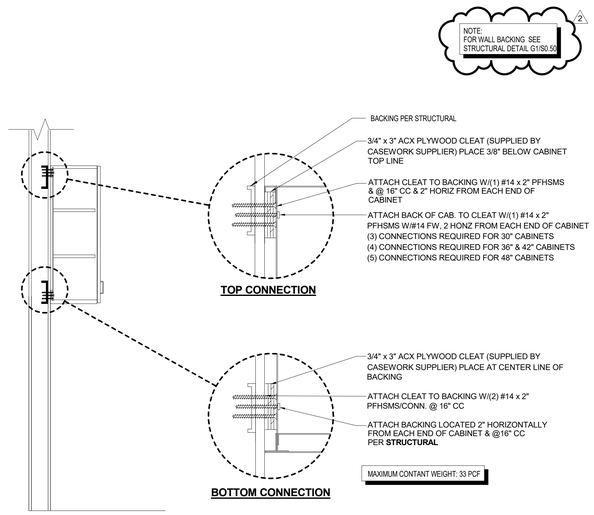

ANCHORAGE DETAIL - WALL CABINET

1 1/2" = 1'-0" (4)

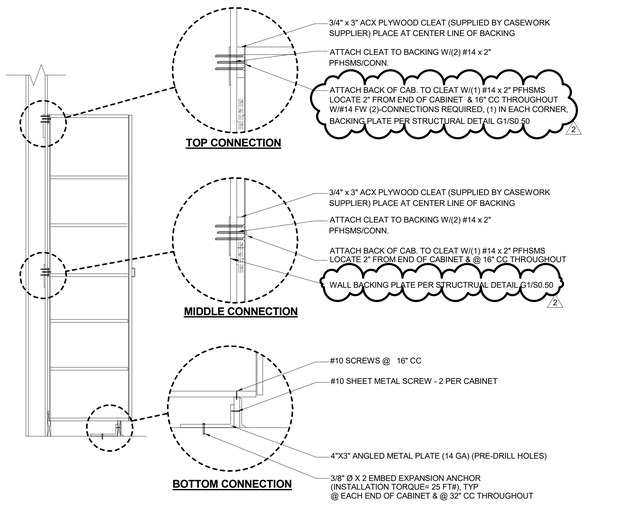

ANCHORAGE DETAIL - TALL STORAGE CABINET

1 1/2" = 1'-0" (5)

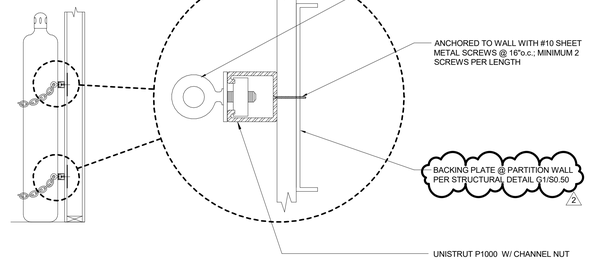

ANCHORAGE DETAIL - CYLINDER RESTRAINT

1 1/2" = 1'-0" (6)

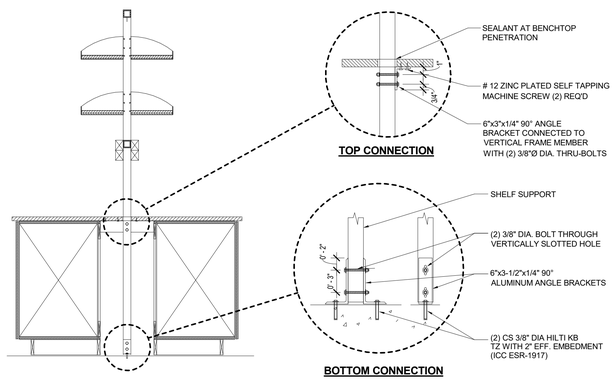

ANCHORAGE DETAIL - ISLAND SHELVING

1 1/2" = 1'-0" (7)

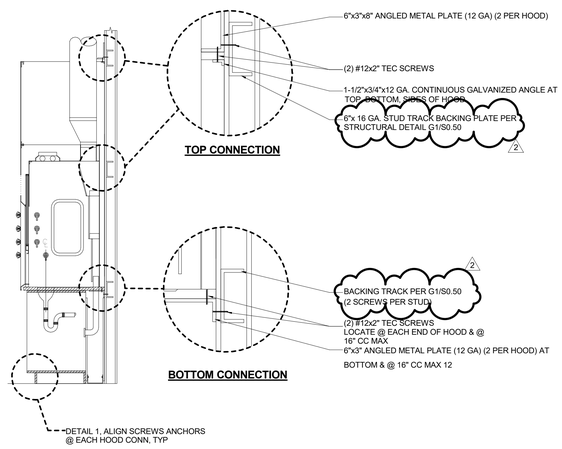

ANCHORAGE DETAIL - HOOD

1 1/2" = 1'-0" (8)

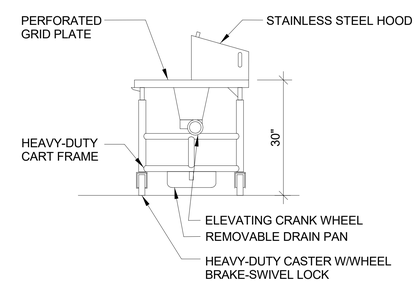

DISSECTION TABLE SECTION

3/4" = 1'-0" (9)

1918 Main Street, Third Floor
Santa Monica, California 90405
Telephone 310.557.7600

STRUCTURAL ENGINEER
SAIFUL BOUQUET
155 N LAKE AVE
PASADENA, CA 91101
626-304-2616

MECHANICAL & PLUMBING ENGINEER
STANTEC CONSULTING INC
14130 RIVERSIDE DR. # 201
SHERMAN OAKS, CA 91423
818-377-8220

ELECTRICAL ENGINEER
FBA ENGINEERING
150 PAULARINO AVE. #A120
COSTA MESA, CA 92626
949-852-9995

CIVIL ENGINEER
KPFF CONSULTING ENGINEERS
700 SOUTH FLOWER ST. #2100
LOS ANGELES, CA 90017
213-418-0201

LANDSCAPE ARCHITECT
LYNN CAPOUYA, INC.
17992 MITCHELL SOUTH, #110
IRVINE, CA 92614
949-756-0150

LABORATORY CONSULTANT
RESEARCH FACILITIES DESIGN
3965 FIFTH AVE. #400
SAN DIEGO, CA 92103
619-297-0159

SCIENCE CENTER

SANTA ANA COLLEGE

RANCHO SANTIAGO COMMUNITY COLLEGE DISTRICT

1530 W. 17TH ST.
SANTA ANA, CA 92706

SANTA ANA COLLEGE

I HEREBY CERTIFY THAT THIS PLAN, SPECIFICATION OR REPORT WAS PREPARED BY ME OR UNDER MY DIRECT SUPERVISION AND THAT I AM A DULY LICENSED ARCHITECT UNDER THE LAWS OF THE STATE OF CA

LICENSED ARCHITECT JAMES G. MATSON No. 27744 RENEWAL DATE SEPTEMBER 30, 2017 STATE OF CALIFORNIA

LICENSED ARCHITECT KEN TSUTSUI No. 32744 REN. 8-30-2017 STATE OF CALIFORNIA

NAME: JAMES G. MATSON
DATE: MAY 16, 2017
REGISTRATION NUMBER: C13036

NO	DESCRIPTION	DATE
2	Addendum 2	08-30-17

ISSUANCE HISTORY - THIS SHEET

DRAWN BY: Author | REVIEW BY: Approver

HGA NO: 3584-001-00

LABORATORY ANCHORAGE DETAILS

DATE: JULY 06, 2017

LF4.06

ADDENDA PACKAGE

© COPYRIGHT HAMMEL, GREEN AND ABRAHAMSON, INC.

8/30/2017 3:40:16 PM C:\Users\mricci\Documents\LF-CENTRAL-SAC-2016_mricci@hga.com.rvt Author

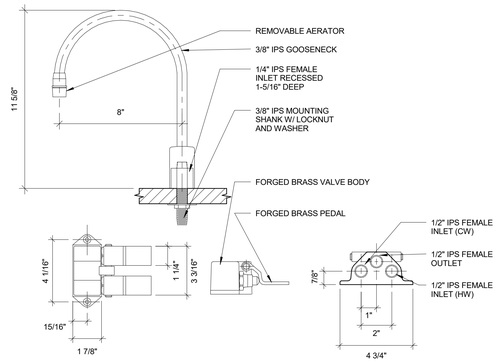

IHWICW (FT) - DECK

3" = 1'-0" (1)

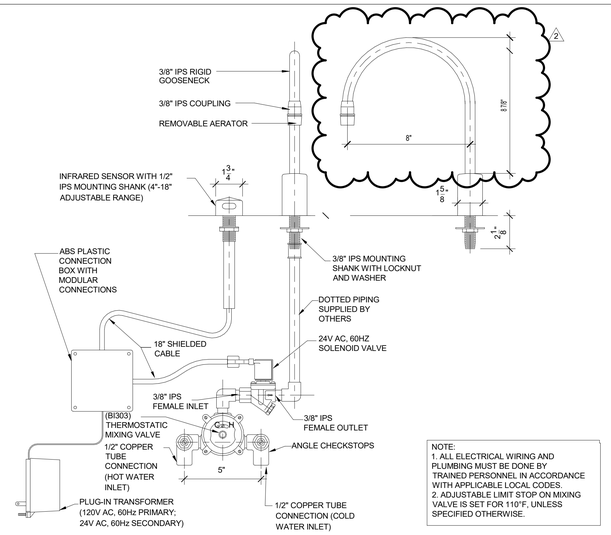

NOTE:
1. ALL ELECTRICAL WIRING AND PLUMBING MUST BE DONE BY TRAINED PERSONNEL IN ACCORDANCE WITH APPLICABLE LOCAL CODES.
2. ADJUSTABLE LIMIT STOP ON MIXING VALVE IS SET FOR 110°F, UNLESS SPECIFIED OTHERWISE.

IHWICW (IR) - DECK

3" = 1'-0" (2)

NOTE:
THIS HOSE SHOULD NOT BE USED IN APPLICATIONS WHERE WATER PRESSURE EXCEEDS 90 PSI.

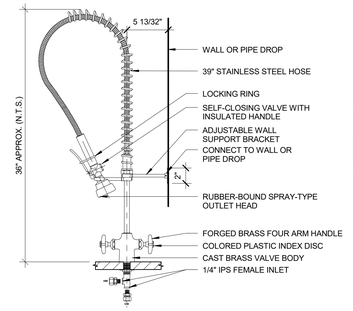

(HANDLES SHOWN ROTATED FOR CLARITY)

FOUR-ARM HANDLES

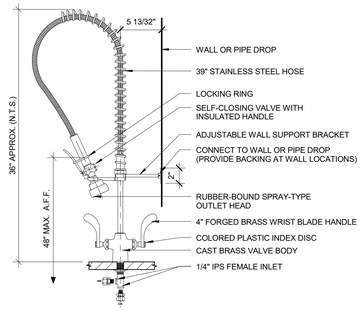

(HANDLES SHOWN ROTATED FOR CLARITY)

WRIST BLADE HANDLES (ACCESSIBLE)

IHWICW (SPRAY) - DECK

1 1/2" = 1'-0" (3)

NOTE:
THIS HOSE SHOULD NOT BE USED IN APPLICATIONS WHERE WATER PRESSURE EXCEEDS 90 PSI.

(HANDLES SHOWN ROTATED FOR CLARITY)

FOUR-ARM HANDLES

IHWICW (SPRAY) - PANEL

1 1/2" = 1'-0" (4)

FOUR-ARM HANDLES

WRIST BLADE HANDLES (ADA)

IHWICW - DECK

3" = 1'-0" (5)

FOUR-ARM HANDLES

IHWICW - PANEL

3" = 1'-0" (6)

LEVER HANDLE (ADA)

NOTE:
1. FITTING TO BE CENTERED WITH FUME HOOD CUP SINK.

FOUR-ARM HANDLE

ICW - HOOD

3" = 1'-0" (7)

INDUSTRIAL WATER SIGN

1 : 1 (8)

ROUND HANDLE

NOTES:
ALL COMPONENTS IN CONTACT WITH PURE WATER SHALL BE POLYPROPYLENE.

LEVER HANDLE (ACCESSIBLE)

PW - DECK

3" = 1'-0" (9)

1918 Main Street, Third Floor
Santa Monica, California 90405
Telephone 310.557.7600

STRUCTURAL ENGINEER
SAIFUL BOUQUET
155 N LAKE AVE
PASADENA, CA 91101
626-304-2616

MECHANICAL & PLUMBING ENGINEER
STANTEC CONSULTING INC
14130 RIVERSIDE DR. # 201
SHERMAN OAKS, CA 91423
818-377-8220

ELECTRICAL ENGINEER
FBA ENGINEERING
150 PAULARINO AVE. #A120
COSTA MESA, CA 92626
949-852-9995

CIVIL ENGINEER
KPFF CONSULTING ENGINEERS
700 SOUTH FLOWER ST. #2100
LOS ANGELES, CA 90017
213-418-0201

LANDSCAPE ARCHITECT
LYNN CAPOUYA, INC.
17992 MITCHELL SOUTH, #110
IRVINE, CA 92614
949-756-0150

LABORATORY CONSULTANT
RESEARCH FACILITIES DESIGN
3965 FIFTH AVE. #400
SAN DIEGO, CA 92103
619-297-0159

SCIENCE CENTER

SANTA ANA COLLEGE

RANCHO SANTIAGO COMMUNITY COLLEGE DISTRICT

1530 W. 17TH ST.
SANTA ANA, CA 92706

SANTA ANA COLLEGE

I HEREBY CERTIFY THAT THIS PLAN, SPECIFICATION OR REPORT WAS PREPARED BY ME OR UNDER MY DIRECT SUPERVISION AND THAT I AM A DULY LICENSED ARCHITECT UNDER THE LAWS OF THE STATE OF CA

LICENSED ARCHITECT JAMES G. MATSON No. C13036 EXPIRATION 08-31-2017 RENEWAL DUE STATE OF CALIFORNIA

LICENSED ARCHITECT KENT TSUNEISHI No. C-27483 EXPIRATION 10-31-2017 RENEWAL DUE STATE OF CALIFORNIA

NAME: JAMES G. MATSON
DATE: MAY 16, 2017
REGISTRATION NUMBER: C13036

NO	DESCRIPTION	DATE
2	Addendum 2	08-30-17

ISSUANCE HISTORY - THIS SHEET

DRAWN BY: Author | REVIEW BY: Approver

HGA NO: 3584-001-00

LABORATORY FITTING DETAILS

DATE: JULY 06, 2017

LF5.00

ADDENDA PACKAGE

8/30/2017 3:40:19 PM C:\Users\mrossfield\Documents\F-CENTRAL-SAC@hga_mrossfield.com.rvt Author

© COPYRIGHT HAMMEL, GREEN AND ABRAHAMSON, INC.

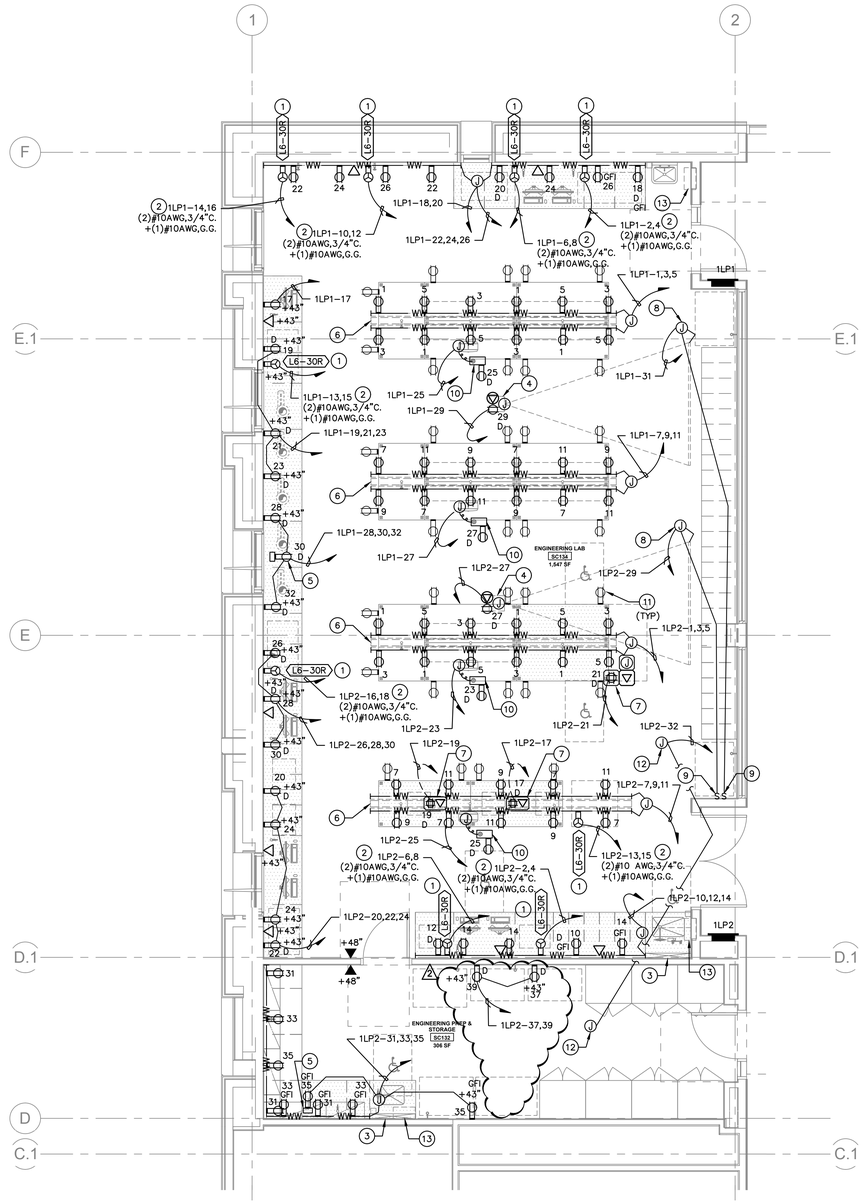

KEY NOTES:

1. MOUNT RECEPTACLE IN WIREWAY.
2. ROUTE HOMERUN THROUGH WIREWAY.
3. PIPEDROP, UTILIZE FOR CONCEALMENT OF CONDUIT. SEE DETAIL 6/LE4.01 AND 1/LE4.02.
4. CEILING MOUNT PROJECTOR. PROVIDE RECEPTACLE, VERIFY LOCATION AND MOUNTING WITH AV SERIES DRAWINGS AND SPECIFICATIONS.
5. ELECTRICAL PEDESTAL, SEE DETAIL 2/LE4.02.
6. OVERHEAD SERVICE CARRIER. SEE DETAIL 1/LE4.01.
7. PROVIDE AND INSTALL RECESSED FLOORBOX SUITABLE FOR SLAB ON GRADE INSTALLATION. WIREMOLD RFB4 SERIES.
8. J-BOX FOR MOTORIZED PROJECTION SCREEN. PROVIDE CONNECTION, VERIFY REQUIREMENTS.
9. PROVIDE AND INSTALL UP-DOWN SWITCH FOR PROJECTION SCREEN. COORDINATE WITH MANUFACTURER AND PROVIDE CONNECTION. PROVIDE AND INSTALL POWER CORD REEL.
10. COXREELS EZ-PC13-2512-F OR EQUAL WITH DUPLEX G.F.C.I. METAL INDUSTRIAL RECEPTACLE AND 25 CORD FEET, UNLESS OTHERWISE SPECIFIED IN LABORATORY FURNISHINGS DESIGN. COORDINATE LOCATION WITH LABORATORY FURNISHING DRAWINGS. INSTALL PER MANUFACTURER'S RECOMMENDATIONS.
11. PROVIDE AND INSTALL J-BOX AND RECEPTACLE TO MOVEABLE TABLE. PROVIDE AND INSTALL S.O. CORD (10'MIN.) AND PLUG (5-20P). SEE DETAIL 3/LE4.02.
12. PROVIDE J-BOX AND 120V CIRCUIT FOR PAPER TOWEL DISPENSERS. REQUIRED 6V DC POWER SUPPLY BY OTHERS. CONTRACTOR SHALL PROVIDE CONDUIT FROM J-BOX TO PAPER TOWEL DISPENSER LOCATIONS. SEE KEYNOTE 13 FOR PAPER TOWEL DISPENSER LOCATIONS.
13. LOCATION OF PAPER TOWEL DISPENSER. SEE KEYNOTE 12 FOR ADDITIONAL INFORMATION.

GENERAL NOTES:

1. COORDINATE ALL DEVICE MOUNTING HEIGHTS AND LOCATIONS WITH LABORATORY FURNISHING DESIGN PRIOR TO ROUGH-IN.
2. AT ISLAND BENCHES WITHOUT PIPEDROP STUB ELECTRICAL FROM BELOW FLOOR UP INTO PIPE CHASE. SEE LABORATORY FURNISHINGS DETAIL FOR LOCATION AND DIMENSIONS OF PIPE CHASE.
3. ALL OUTLETS WITHIN 6'-0" OF SINK TO BE GFI.
4. PROVIDE (1) 1-1/4" C.O. STUBBED FROM EACH WALL, FLOOR, OR WIREWAY MOUNTED TELE/DATA OUTLET TO ACCESSIBLE CEILING.
5. PROVIDE A MINIMUM OF (1) 1-1/4" C.O. STUBBED FROM EACH TELE/DATA SECTION OF DUAL CHANNEL WIREWAY TO ACCESSIBLE CEILING. THIS IS REQUIRED FOR ALL DUAL CHANNEL WIREWAY LOCATIONS, EVEN WHERE NO DATA IS SHOWN.
6. COORDINATE ALL FLOOR BOX LOCATIONS WITH LABORATORY FURNISHING DRAWINGS PRIOR TO ROUGH-IN.
7. FOR WIREWAY DETAILS SEE 1 THRU 5/LE4.01.
8. PROVIDE (1) 1" C.O. STUBBED FROM EACH PEDESTAL TELE/DATA OUTLET TO ACCESSIBLE CEILING.
9. PROVIDE INDEPENDENT HOT AND NEUTRAL CONDUCTORS FOR EACH RECEPTACLE CIRCUIT IN A HOMERUN.
10. PROVIDE A MINIMUM OF (1)1-1/4"C.O. STUBBED FROM THE TEL/DATA SECTION OF EACH FLOOR BOX TO ACCESSIBLE CEILING.

1 PARTIAL POWER PLAN LEVEL 1
1/4" = 1'-0"

1918 Main Street,Third Floor
Santa Monica , California 90405
Telephone 310.557.7600

STRUCTURAL ENGINEER
SAIFUL BOUQUET
155 N LAKE AVE
PASADENA, CA 91101
626-304-2616

MECHANICAL & PLUMBING ENGINEER
STANTEC CONSULTING INC
14130 RIVERSIDE DR. # 201
SHERMAN OAKS, CA 91423
818-377-8220

ELECTRICAL ENGINEER
FBA ENGINEERING
150 PAULARINO AVE. #A120
COSTA MESA, CA 92626
949-852-9995

CIVIL ENGINEER
KPFF CONSULTING ENGINEERS
700 SOUTH FLOWER ST. #2100
LOS ANGELES, CA 90017
213-418-0201

LANDSCAPE ARCHITECT
LYNN CAPOUYA, INC.
17992 MITCHELL SOUTH, #110
IRVINE, CA 92614
949-756-0150

LABORATORY CONSULTANT
RESEARCH FACILITIES DESIGN
3965 FIFTH AVE. #400
SAN DIEGO, CA 92103
619-297-0159

SCIENCE CENTER
SANTA ANA COLLEGE

RANCHO SANTIAGO COMMUNITY COLLEGE DISTRICT

1530 W. 17TH ST.
SANTA ANA, CA 92706

SANTA ANA COLLEGE

I HEREBY CERTIFY THAT THIS PLAN, SPECIFICATION OR REPORT WAS PREPARED BY ME OR UNDER MY DIRECT SUPERVISION AND THAT I AM A DULY LICENSED PROFESSIONAL ENGINEER UNDER THE LAWS OF THE STATE OF CA

NAME: JAMES G. MATSON — GUY J. CARPINO
DATE: SEPTEMBER 30, 2017 — JUNE 30, 2019
REGISTRATION NUMBER: C13036 — E 15951

NO	DESCRIPTION	DATE
2	Addendum 2	09/01/2017

ISSUANCE HISTORY - THIS SHEET

DRAWN BY: Author — REVIEW BY: Approver

HGA NO: 3584-001-00

PARTIAL POWER PLAN LEVEL 1

DATE: JULY 06, 2017

ADDENDA PACKAGE

LE2.01A

MICHAEL WALL ENGINEERING
858-638-0600
858-638-0640 (fax)
www.mwalleng.com
4115 Sorrento Valley Blvd.
San Diego, CA 92121
REGISTERED ELECTRICAL ENGINEERS

©COPYRIGHT HAMMEL, GREEN AND ABRAHAMSON, INC.

W:\PROJ16\16026\DWG\LE2.01A - PARTIAL POWER PLAN LEVEL 1.DWG Tuesday, August 29, 2017 10:38:03 AM - BRashidi

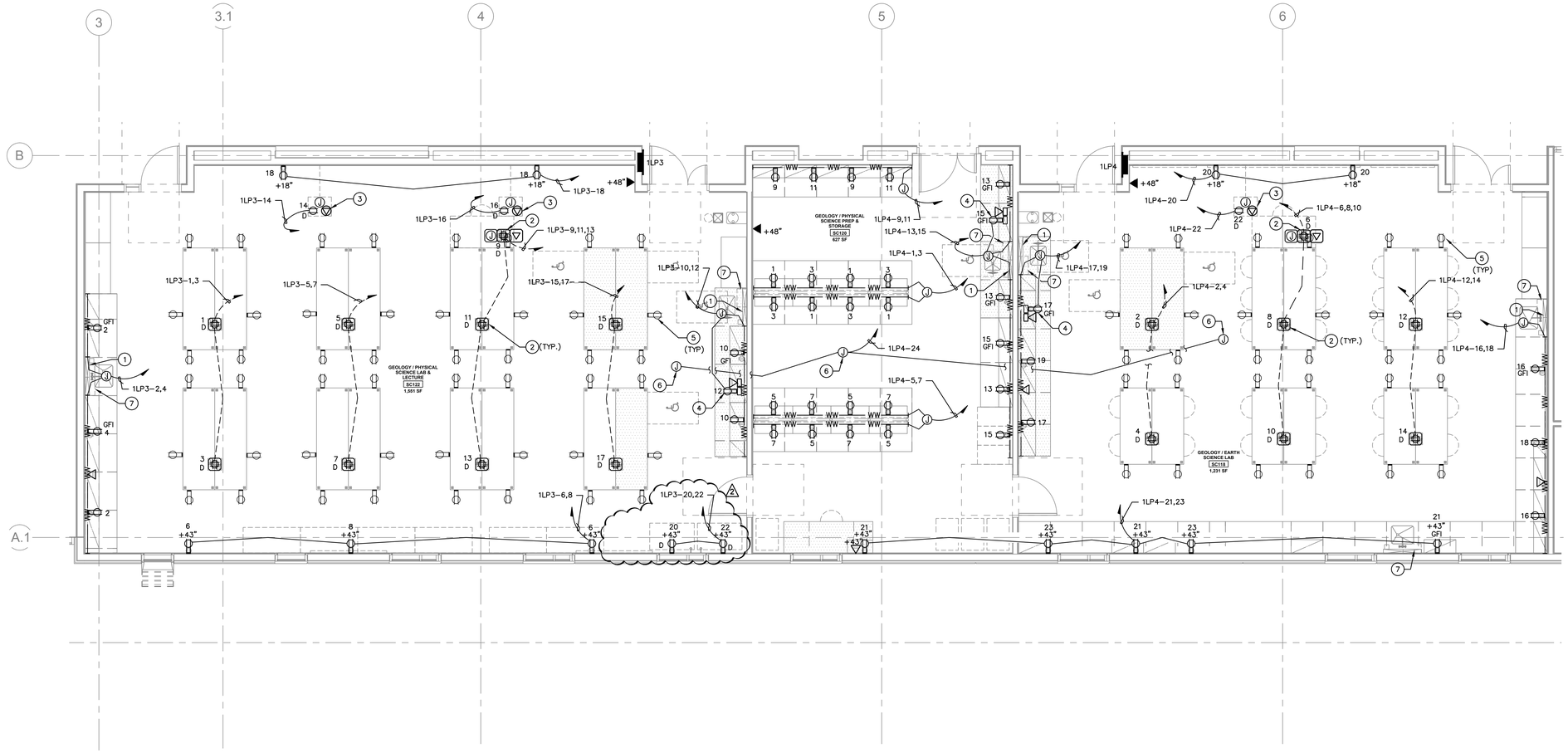

KEY NOTES:

1. PIPEDROP, UTILIZE FOR CONCEALMENT OF CONDUIT. SEE DETAIL 6/LE4.01 AND 1/LE4.02.
2. PROVIDE AND INSTALL RECESSED FLOORBOX SUITABLE FOR SLAB ON GRADE INSTALLATION. WIREMOLD RFB4 SERIES.
3. WALL MOUNT PROJECTOR. PROVIDE RECEPTACLE, VERIFY LOCATION AND MOUNTING WITH AV SERIES DRAWINGS AND SPECIFICATIONS.
4. ELECTRICAL PEDESTAL, SEE DETAIL 2/LE4.02.
5. PROVIDE AND INSTALL J-BOX AND RECEPTACLE TO MOVEABLE TABLE. PROVIDE AND INSTALL S.O. CORD (8'MIN) AND PLUG (5-20P). SEE DETAIL 3/LE4.02.
6. PROVIDE J-BOX AND 120V CIRCUIT FOR PAPER TOWEL DISPENSERS. REQUIRED 6V DC POWER SUPPLY BY OTHERS. CONTRACTOR SHALL PROVIDE CONDUIT FROM J-BOX TO PAPER TOWEL DISPENSER LOCATIONS. SEE KEYNOTE 7 FOR PAPER TOWEL DISPENSER LOCATIONS.
7. LOCATION OF PAPER TOWEL DISPENSER. SEE KEYNOTE 6 FOR ADDITIONAL INFORMATION.

GENERAL NOTES:

1. COORDINATE ALL DEVICE MOUNTING HEIGHTS AND LOCATIONS WITH LABORATORY FURNISHING DESIGN PRIOR TO ROUGH-IN.
2. AT ISLAND BENCHES WITHOUT PIPEDROP STUB ELECTRICAL FROM BELOW FLOOR UP INTO PIPE CHASE. SEE LABORATORY FURNISHINGS DETAIL FOR LOCATION AND DIMENSIONS OF PIPE CHASE.
3. ALL OUTLETS WITHIN 6'-0" OF SINK TO BE GFI.
4. PROVIDE (1) 1-1/4" C.O. STUBBED FROM EACH WALL, FLOOR, OR WIREWAY MOUNTED TELE/DATA OUTLET TO ACCESSIBLE CEILING.
5. PROVIDE A MINIMUM OF (1) 1-1/4" C.O. STUBBED FROM EACH TELE/DATA SECTION OF DUAL CHANNEL WIREWAY TO ACCESSIBLE CEILING. THIS IS REQUIRED FOR ALL DUAL CHANNEL WIREWAY LOCATIONS, EVEN WHERE NO DATA IS SHOWN.
6. COORDINATE ALL FLOOR BOX LOCATIONS WITH LABORATORY FURNISHING DRAWINGS PRIOR TO ROUGH-IN.
7. FOR WIREWAY DETAILS SEE 1 THRU 5/LE4.01.
8. PROVIDE (1) 1" C.O. STUBBED FROM EACH PEDESTAL TELE/DATA OUTLET TO ACCESSIBLE CEILING.
9. PROVIDE INDEPENDENT HOT AND NEUTRAL CONDUCTORS FOR EACH RECEPTACLE CIRCUIT IN A HOMERUN.
10. PROVIDE A MINIMUM OF (1)1-1/4"C.O. STUBBED FROM THE TEL/DATA SECTION OF EACH FLOOR BOX TO ACCESSIBLE CEILING.

1 PARTIAL POWER PLAN LEVEL 1
1/4" = 1'-0"

hga.
1918 Main Street,Third Floor
Santa Monica , California 90405
Telephone 310.557.7600

STRUCTURAL ENGINEER
SAIFUL BOUQUET
155 N LAKE AVE
PASADENA, CA 91101
626-304-2616

MECHANICAL & PLUMBING ENGINEER
STANTEC CONSULTING INC
14130 RIVERSIDE DR. # 201
SHERMAN OAKS, CA 91423
818-377-8220

ELECTRICAL ENGINEER
FBA ENGINEERING
150 PAULARINO AVE. #A126
COSTA MESA, CA 92626
949-852-9995

CIVIL ENGINEER
KPFF CONSULTING ENGINEERS
700 SOUTH FLOWER ST. #2100
LOS ANGELES, CA 90017
213-418-0201

LANDSCAPE ARCHITECT
LYNN CAPOUYA, INC.
17992 MITCHELL SOUTH, #110
IRVINE, CA 92614
949-756-0150

LABORATORY CONSULTANT
RESEARCH FACILITIES DESIGN
3965 FIFTH AVE. #400
SAN DIEGO, CA 92103
619-297-0159

SCIENCE CENTER
SANTA ANA COLLEGE

RANCHO SANTIAGO COMMUNITY COLLEGE DISTRICT

1530 W. 17TH ST.
SANTA ANA, CA 92706

SANTA ANA COLLEGE

I HEREBY CERTIFY THAT THIS PLAN, SPECIFICATION, OR REPORT WAS PREPARED BY ME, OR UNDER MY DIRECT SUPERVISION AND THAT I AM A DULY LICENSED PROFESSIONAL ENGINEER UNDER THE LAWS OF THE STATE OF CA.

NAME: JAMES G. MATSON — GUY J. CARPINO
DATE: SEPTEMBER 30, 2017 — JUNE 30, 2019
REGISTRATION NUMBER: C13036 — E 15951

NO	DESCRIPTION	DATE
2	Addendum 2	09/01/2017

ISSUANCE HISTORY - THIS SHEET

DRAWN BY: Author | REVIEW BY: Approver

HGA NO: 3584-001-00

PARTIAL POWER PLAN LEVEL 1

DATE: JULY 06, 2017

LE2.01B

ADDENDA PACKAGE

MICHAEL WALL ENGINEERING
858-638-0600
858-638-0640 (fax)
www.mwalleng.com
4115 Sorrento Valley Blvd.
San Diego, CA 92121
REGISTERED ELECTRICAL ENGINEERS

©COPYRIGHT HAMMEL, GREEN AND ABRAHAMSON, INC.

W: \PROJ16\16026\DWG\LE2.01B - PARTIAL POWER PLAN LEVEL 1.DWG Tuesday, August 29, 2017 10:38:12 AM - BRashidi

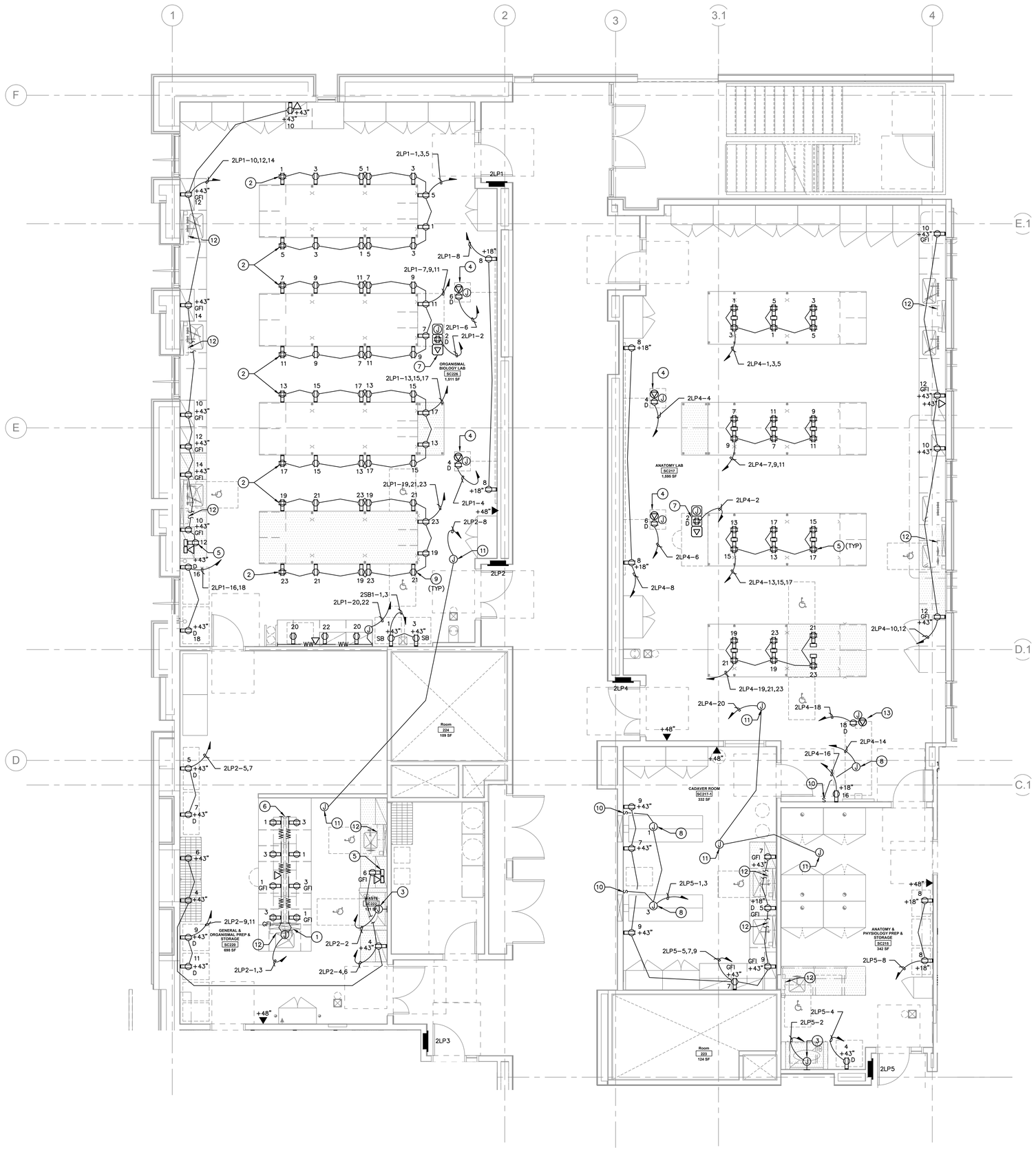

1 PARTIAL POWER PLAN LEVEL 2
1/4" = 1'-0"

KEY NOTES:

1. PIPEDROP, UTILIZE FOR CONCEALMENT OF CONDUIT. SEE DETAIL 6/LE4.01 AND 1/LE4.02.
2. RECEPTACLE TO BE MOUNTED IN SIDE OF CABINET, MATCH MOUNTING HEIGHT OF TABLE APRON RECEPTACLES. VERIFY LOCATION AND MOUNTING WITH LABORATORY FURNISHING DRAWINGS.
3. PROVIDE J–BOX AND CONNECTION AT TOP OF CHEMICAL FUME HOOD AT +96". VERIFY MOUNTING HEIGHT WITH ARCHITECTURAL AND LF DRAWINGS BEFORE ROUGH–IN.
4. WALL MOUNT PROJECTOR. PROVIDE RECEPTACLE, VERIFY LOCATION AND MOUNTING WITH AV SERIES DRAWINGS AND SPECIFICATIONS.
5. ELECTRICAL PEDESTAL, SEE DETAIL 2/LE4.02.
6. OVERHEAD SERVICE CARRIER. SEE DETAIL 1/LE4.01.
7. PROVIDE AND INSTALL RECESSED FLOORBOX, WIREMOLD RFB4 SERIES.
8. PROVIDE AND INSTALL J–BOX AND CIRCUIT FOR EXAM LIGHT.
9. RECEPTACLE TO BE MOUNTED IN TABLE APRON. VERIFY LOCATION AND MOUNTING WITH LABORATORY FURNISHING DRAWINGS.
10. PROVIDE WALL MOUNTED SWITCH FOR EXAM LIGHT AT +43"A.F.F.
11. PROVIDE J–BOX AND 120V CIRCUIT FOR PAPER TOWEL DISPENSERS. REQUIRED 6V DC POWER SUPPLY BY OTHERS. CONTRACTOR SHALL PROVIDE CONDUIT FROM J–BOX TO PAPER TOWEL DISPENSER LOCATIONS. SEE KEYNOTE 12 FOR PAPER TOWEL DISPENSER LOCATIONS.
12. LOCATION OF PAPER TOWEL DISPENSER. SEE KEYNOTE 11 FOR ADDITIONAL INFORMATION.
13. CEILING MOUNT CAMERA. PROVIDE RECEPTACLE, VERIFY LOCATION AND MOUNTING WITH ARCHITECTURAL.

GENERAL NOTES:

1. COORDINATE ALL DEVICE MOUNTING HEIGHTS AND LOCATIONS WITH LABORATORY FURNISHING DESIGN PRIOR TO ROUGH–IN.
2. AT ISLAND BENCHES WITHOUT PIPEDROP STUB ELECTRICAL FROM BELOW FLOOR UP INTO PIPE CHASE. SEE LABORATORY FURNISHINGS DETAIL FOR LOCATION AND DIMENSIONS OF PIPE CHASE.
3. ALL OUTLETS WITHIN 6'–0" OF SINK TO BE GFI.
4. PROVIDE (1) 1–1/4" C.O. STUBBED FROM EACH WALL, FLOOR, OR WIREWAY MOUNTED TELE/DATA OUTLET TO ACCESSIBLE CEILING.
5. PROVIDE A MINIMUM OF (1) 1–1/4" C.O. STUBBED FROM EACH TELE/DATA SECTION OF DUAL CHANNEL WIREWAY TO ACCESSIBLE CEILING. THIS IS REQUIRED FOR ALL DUAL CHANNEL WIREWAY LOCATIONS, EVEN WHERE NO DATA IS SHOWN.
6. COORDINATE ALL FLOOR BOX LOCATIONS WITH LABORATORY FURNISHING DRAWINGS PRIOR TO ROUGH–IN.
7. FOR WIREWAY DETAILS SEE 1 THRU 5/LE4.01.
8. PROVIDE (1) 1" C.O. STUBBED FROM EACH PEDESTAL TELE/DATA OUTLET TO ACCESSIBLE CEILING.
9. PROVIDE INDEPENDENT HOT AND NEUTRAL CONDUCTORS FOR EACH RECEPTACLE CIRCUIT IN A HOMERUN.
10. PROVIDE A MINIMUM OF (1)1–1/4"C.O. STUBBED FROM THE TEL/DATA SECTION OF EACH FLOOR BOX TO ACCESSIBLE CEILING.

hga.
1918 Main Street,Third Floor
Santa Monica , California 90405
Telephone 310.557.7600

STRUCTURAL ENGINEER
SAIFUL BOUQUET
155 N LAKE AVE
PASADENA, CA 91101
626-304-2616

MECHANICAL & PLUMBING ENGINEER
STANTEC CONSULTING INC
14130 RIVERSIDE DR. # 201
SHERMAN OAKS, CA 91423
818-377-8220

ELECTRICAL ENGINEER
FBA ENGINEERING
150 PAULARINO AVE. #A120
COSTA MESA, CA 92626
949-852-9995

CIVIL ENGINEER
KPFF CONSULTING ENGINEERS
700 SOUTH FLOWER ST. #2100
LOS ANGELES, CA 90017
213-418-0201

LANDSCAPE ARCHITECT
LYNN CAPOUYA, INC.
17992 MITCHELL SOUTH, #110
IRVINE, CA 92614
949-756-0150

LABORATORY CONSULTANT
RESEARCH FACILITIES DESIGN
3965 FIFTH AVE. #400
SAN DIEGO, CA 92103
619-297-0159

SCIENCE CENTER
SANTA ANA COLLEGE

RANCHO SANTIAGO COMMUNITY COLLEGE DISTRICT

1530 W. 17TH ST.
SANTA ANA, CA 92706

SANTA ANA COLLEGE

I HEREBY CERTIFY THAT THIS PLAN, SPECIFICATION OR REPORT WAS PREPARED BY ME OR UNDER MY DIRECT SUPERVISION AND THAT I AM A DULY LICENSED PROFESSIONAL ENGINEER UNDER THE LAWS OF THE STATE OF CA

NAME: JAMES C. MATSON — GUY J. CARPINO
DATE: SEPTEMBER 30, 2017 — JUNE 30, 2019
REGISTRATION NUMBER: C13036 — E 15951

NO	DESCRIPTION	DATE
2	Addendum 2	09/01/2017

ISSUANCE HISTORY - THIS SHEET

DRAWN BY: Author — REVIEW BY: Approver

HGA NO: 3584-001-00

PARTIAL POWER PLAN LEVEL 2

DATE: JULY 06, 2017

MICHAEL WALL ENGINEERING
858-638-0600
858-638-0640 (fax)
www.mwalleng.com
4115 Sorrento Valley Blvd.
San Diego, CA 92121
REGISTERED ELECTRICAL ENGINEERS

LE2.02A

ADDENDA PACKAGE

©COPYRIGHT HAMMEL, GREEN AND ABRAHAMSON, INC.

W:\PROJ16\16026\DWG\LE2.02A – PARTIAL POWER PLAN LEVEL 2.DWG Tuesday, August 29, 2017 10:38:26 AM – BRashidi

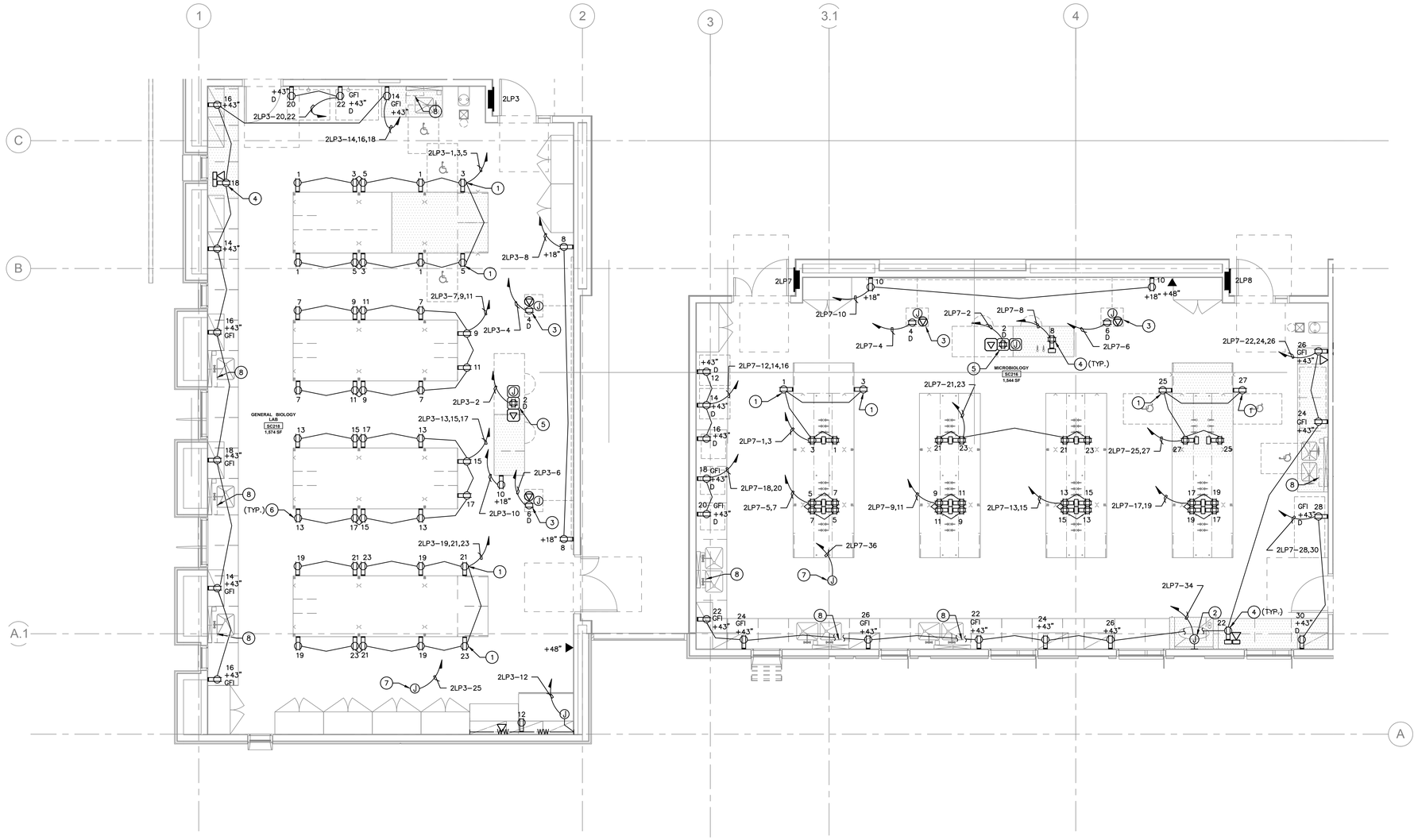

KEY NOTES:

1. RECEPTACLE TO BE MOUNTED IN SIDE OF CABINET, MATCH MOUNTING HEIGHT OF TABLE APRON RECEPTACLES. VERIFY LOCATION AND MOUNTING WITH LABORATORY FURNISHING DRAWINGS.
2. PROVIDE J-BOX AND CONNECTION AT TOP OF CHEMICAL FUME HOOD AT +96". VERIFY MOUNTING HEIGHT WITH ARCHITECTURAL AND LF DRAWINGS BEFORE ROUGH-IN.
3. WALL MOUNT PROJECTOR. PROVIDE RECEPTACLE, VERIFY LOCATION AND MOUNTING WITH AV SERIES DRAWINGS AND SPECIFICATIONS.
4. ELECTRICAL PEDESTAL, SEE DETAIL 2/LE4.02.
5. PROVIDE AND INSTALL RECESSED FLOORBOX, WIREMOLD RFB4 SERIES.
6. RECEPTACLE TO BE MOUNTED IN TABLE APRON. VERIFY LOCATION AND MOUNTING WITH LABORATORY FURNISHING DRAWINGS.
7. PROVIDE J-BOX AND 120V CIRCUIT FOR PAPER TOWEL DISPENSERS. REQUIRED 6V DC POWER SUPPLY BY OTHERS. CONTRACTOR SHALL PROVIDE CONDUIT FROM J-BOX TO PAPER TOWEL DISPENSER LOCATIONS. SEE KEYNOTE 8 FOR PAPER TOWEL DISPENSER LOCATIONS.
8. LOCATION OF PAPER TOWEL DISPENSER. SEE KEYNOTE 7 FOR ADDITIONAL INFORMATION.

GENERAL NOTES:

1. COORDINATE ALL DEVICE MOUNTING HEIGHTS AND LOCATIONS WITH LABORATORY FURNISHING DESIGN PRIOR TO ROUGH-IN.
2. AT ISLAND BENCHES WITHOUT PIPEDROP STUB ELECTRICAL FROM BELOW FLOOR UP INTO PIPE CHASE. SEE LABORATORY FURNISHINGS DETAIL FOR LOCATION AND DIMENSIONS OF PIPE CHASE.
3. ALL OUTLETS WITHIN 6'-0" OF SINK TO BE GFI.
4. PROVIDE (1) 1-1/4" C.O. STUBBED FROM EACH WALL, FLOOR, OR WIREWAY MOUNTED TELE/DATA OUTLET TO ACCESSIBLE CEILING.
5. PROVIDE A MINIMUM OF (1) 1-1/4" C.O. STUBBED FROM EACH TELE/DATA SECTION OF DUAL CHANNEL WIREWAY TO ACCESSIBLE CEILING. THIS IS REQUIRED FOR ALL DUAL CHANNEL WIREWAY LOCATIONS, EVEN WHERE NO DATA IS SHOWN.
6. COORDINATE ALL FLOOR BOX LOCATIONS WITH LABORATORY FURNISHING DRAWINGS PRIOR TO ROUGH-IN.
7. FOR WIREWAY DETAILS SEE 1 THRU 5/LE4.01.
8. PROVIDE (1) 1" C.O. STUBBED FROM EACH PEDESTAL TELE/DATA OUTLET TO ACCESSIBLE CEILING.
9. PROVIDE INDEPENDENT HOT AND NEUTRAL CONDUCTORS FOR EACH RECEPTACLE CIRCUIT IN A HOMERUN.
10. PROVIDE A MINIMUM OF (1)1-1/4"C.O. STUBBED FROM THE TEL/DATA SECTION OF EACH FLOOR BOX TO ACCESSIBLE CEILING.

1 PARTIAL POWER PLAN LEVEL 2
1/4" = 1'-0"

1918 Main Street, Third Floor
Santa Monica, California 90405
Telephone 310.557.7600

STRUCTURAL ENGINEER
SAIFUL BOUQUET
155 N LAKE AVE
PASADENA, CA 91101
626-304-2616

MECHANICAL & PLUMBING ENGINEER
STANTEC CONSULTING INC
14130 RIVERSIDE DR. # 201
SHERMAN OAKS, CA 91423
818-377-8220

ELECTRICAL ENGINEER
FBA ENGINEERING
150 PAULARINO AVE. #A120
COSTA MESA, CA 92626
949-852-9995

CIVIL ENGINEER
KPFF CONSULTING ENGINEERS
700 SOUTH FLOWER ST. #2100
LOS ANGELES, CA 90017
213-418-0201

LANDSCAPE ARCHITECT
LYNN CAPOUYA, INC.
17992 MITCHELL SOUTH, #110
IRVINE, CA 92614
949-756-0150

LABORATORY CONSULTANT
RESEARCH FACILITIES DESIGN
3965 FIFTH AVE. #400
SAN DIEGO, CA 92103
619-297-0159

SCIENCE CENTER
SANTA ANA COLLEGE
RANCHO SANTIAGO COMMUNITY COLLEGE DISTRICT
1530 W. 17TH ST.
SANTA ANA, CA 92706

SANTA ANA COLLEGE

I HEREBY CERTIFY THAT THIS PLAN, SPECIFICATION OR REPORT WAS PREPARED BY ME OR UNDER MY DIRECT SUPERVISION AND THAT I AM A DULY LICENSED PROFESSIONAL ENGINEER UNDER THE LAWS OF THE STATE OF CA

NAME: JAMES G. MATSON — GUY J. CARPINO
DATE: SEPTEMBER 30, 2017 — JUNE 30, 2019
REGISTRATION NUMBER: C13036 — E 15961

NO	DESCRIPTION	DATE
2	Addendum 2	09/01/2017

ISSUANCE HISTORY - THIS SHEET

DRAWN BY: Author | REVIEW BY: Approver

HGA NO: 3584-001-00

PARTIAL POWER PLAN LEVEL 2

DATE: JULY 06, 2017

LE2.02B

ADDENDA PACKAGE

MICHAEL WALL ENGINEERING
858-638-0600
858-638-0640 (fax)
www.mwalleng.com
4115 Sorrento Valley Blvd.
San Diego, CA 92121
REGISTERED ELECTRICAL ENGINEERS

©COPYRIGHT HAMMEL, GREEN AND ABRAHAMSON, INC.

W:\PROJ16\16026\DWG\LE2.02B - PARTIAL POWER PLAN LEVEL 2.DWG Tuesday, August 29, 2017 10:38:39 AM - BRashidi

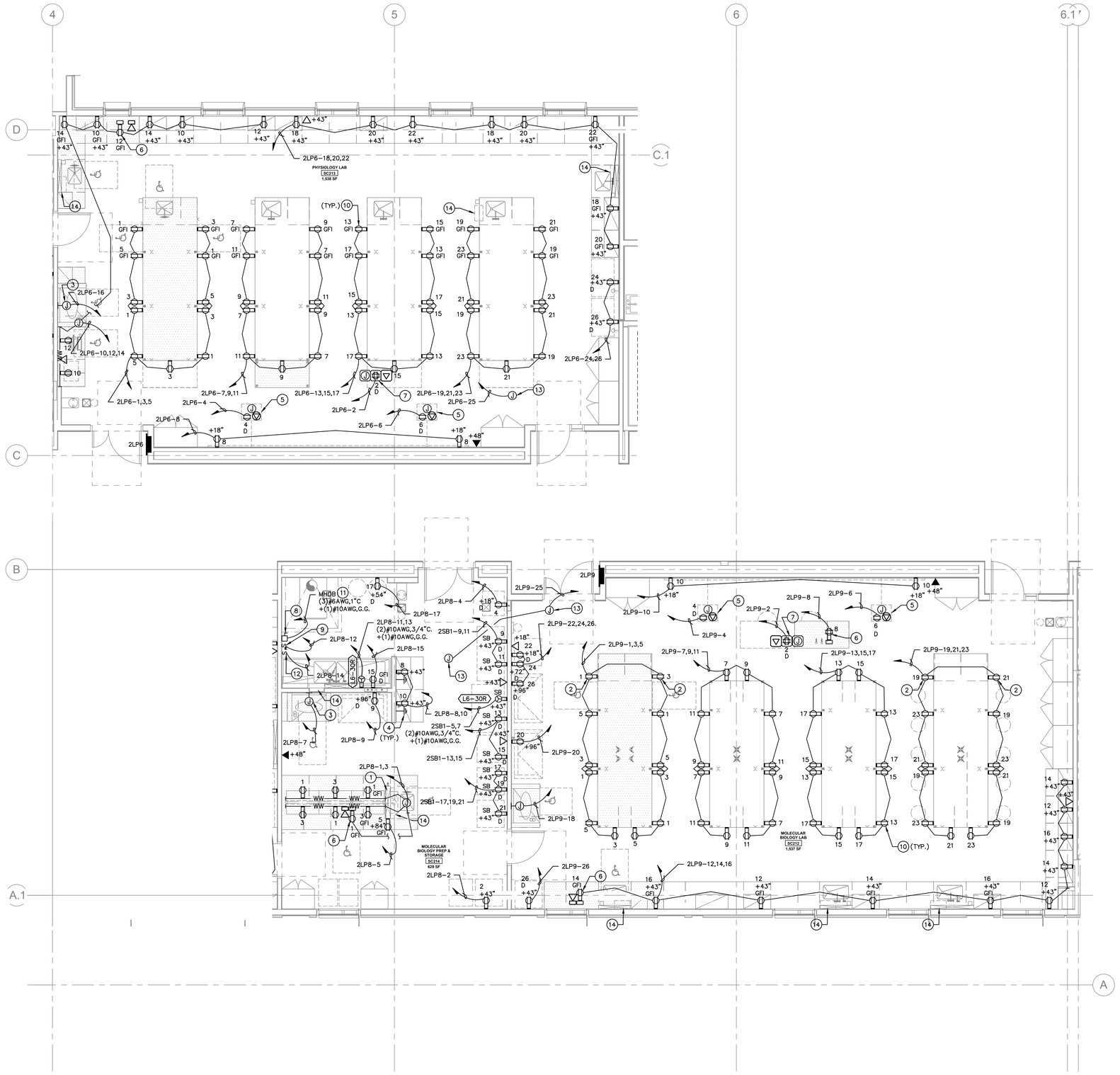

1 PARTIAL POWER PLAN LEVEL 2
1/4" = 1'-0"

KEY NOTES:

1. PIPEDROP. UTILIZE FOR CONCEALMENT OF CONDUIT. SEE DETAIL 6/LE4.01 AND 1/LE4.02.
2. RECEPTACLE TO BE MOUNTED IN SIDE OF CABINET, MATCH MOUNTING HEIGHT OF TABLE APRON RECEPTACLES. VERIFY LOCATION AND MOUNTING WITH LABORATORY FURNISHING DRAWINGS.
3. PROVIDE J-BOX AND CONNECTION AT TOP OF CHEMICAL FUME HOOD AT +96". VERIFY MOUNTING HEIGHT WITH ARCHITECTURAL AND LF DRAWINGS BEFORE ROUGH-IN.
4. PROVIDE GROUNDING OF CABINET AT LOCATION SHOWN ON PLAN BY PROVIDING A (MINIMUM) #12 AWG COPPER, INSULATED GREEN GROUNDING CONDUCTOR FROM THE BONDING TERMINAL OF THE CABINET TO AN ADJACENT EQUIPMENT GROUND. SEE SPECIFICATION SECTION 266000 FOR ADDITIONAL INFORMATION.
5. WALL MOUNT PROJECTOR. PROVIDE RECEPTACLE, VERIFY LOCATION AND MOUNTING WITH AV SERIES DRAWINGS AND SPECIFICATIONS.
6. ELECTRICAL PEDESTAL, SEE DETAIL 2/LE4.02.
7. PROVIDE AND INSTALL RECESSED FLOORBOX, WIREMOLD RFB4 SERIES.
8. PROVIDE AND INSTALL NEMA 3R 60A 3P FUSED DISCONNECT FOR AUTOCLAVE. PROVIDE CONNECTION BETWEEN DISCONNECT AND EQUIPMENT PER MANUFACTURER'S RECOMMENDATIONS.
9. PROVIDE AND INSTALL NEMA 3R MOTOR RATED SNAP SWITCH FOR AUTOCLAVE CONTROLS.
10. RECEPTACLE TO BE MOUNTED IN TABLE APRON. VERIFY LOCATION AND MOUNTING WITH LABORATORY FURNISHING DRAWINGS.
11. CONNECT AUTOCLAVE TO DISTRIBUTION BOARD "MHDB" LOCATED IN MAIN ELECTRICAL ROOM SEE SHEET E-0.4 FOR LOCATION. SEE E-SERIES SINGLELINE DIAGRAM FOR ADDITIONAL INFORMATION.
12. PROVIDE 120V CONNECTION TO SWITCH FOR CANOPY HOOD LIGHT FIXTURES. SEE PROJECT SPECIFICATION 11 53 10 LABORATORY CASEWORK AND OTHER FURNISHINGS FOR LIGHT FIXTURE INFORMATION.
13. PROVIDE J-BOX AND 120V CIRCUIT FOR PAPER TOWEL DISPENSERS. REQUIRED 6V DC POWER SUPPLY BY OTHERS. CONTRACTOR SHALL PROVIDE CONDUIT FROM J-BOX TO PAPER TOWEL DISPENSER LOCATIONS. SEE KEYNOTE 14 FOR PAPER TOWEL DISPENSER LOCATIONS.
14. LOCATION OF PAPER TOWEL DISPENSER. SEE KEYNOTE 13 FOR ADDITIONAL INFORMATION.

GENERAL NOTES:

1. COORDINATE ALL DEVICE MOUNTING HEIGHTS AND LOCATIONS WITH LABORATORY FURNISHING DESIGN PRIOR TO ROUGH-IN.
2. AT ISLAND BENCHES WITHOUT PIPEDROP STUB ELECTRICAL FROM BELOW FLOOR UP INTO PIPE CHASE. SEE LABORATORY FURNISHINGS DETAIL FOR LOCATION AND DIMENSIONS OF PIPE CHASE.
3. ALL OUTLETS WITHIN 6'-0" OF SINK TO BE GFI.
4. PROVIDE (1) 1-1/4" C.O. STUBBED FROM EACH WALL, FLOOR, OR WIREWAY MOUNTED TELE/DATA OUTLET TO ACCESSIBLE CEILING.
5. PROVIDE A MINIMUM OF (1) 1-1/4" C.O. STUBBED FROM EACH TELE/DATA SECTION OF DUAL CHANNEL WIREWAY TO ACCESSIBLE CEILING. THIS IS REQUIRED FOR ALL DUAL CHANNEL WIREWAY LOCATIONS, EVEN WHERE NO DATA IS SHOWN.
6. COORDINATE ALL FLOOR BOX LOCATIONS WITH LABORATORY FURNISHING DRAWINGS PRIOR TO ROUGH-IN.
7. FOR WIREWAY DETAILS SEE 1 THRU 5/LE4.01.
8. PROVIDE (1) 1" C.O. STUBBED FROM EACH PEDESTAL TELE/DATA OUTLET TO ACCESSIBLE CEILING.
9. PROVIDE INDEPENDENT HOT AND NEUTRAL CONDUCTORS FOR EACH RECEPTACLE CIRCUIT IN A HOMERUN.
10. PROVIDE A MINIMUM OF (1)1-1/4"C.O. STUBBED FROM THE TEL/DATA SECTION OF EACH FLOOR BOX TO ACCESSIBLE CEILING.

hga
1918 Main Street,Third Floor
Santa Monica , California 90405
Telephone 310.557.7600

STRUCTURAL ENGINEER
SAIFUL BOUQUET
155 N LAKE AVE
PASADENA, CA 91101
626-304-2616

MECHANICAL & PLUMBING ENGINEER
STANTEC CONSULTING INC
14130 RIVERSIDE DR. # 201
SHERMAN OAKS, CA 91423
818-377-8220

ELECTRICAL ENGINEER
FBA ENGINEERING
150 PAULARINO AVE. #A120
COSTA MESA, CA 92626
949-852-9995

CIVIL ENGINEER
KPFF CONSULTING ENGINEERS
700 SOUTH FLOWER ST. #2100
LOS ANGELES, CA 90017
213-418-0201

LANDSCAPE ARCHITECT
LYNN CAPOUYA, INC.
17992 MITCHELL SOUTH, #110
IRVINE, CA 92614
949-756-0150

LABORATORY CONSULTANT
RESEARCH FACILITIES DESIGN
3965 FIFTH AVE. #400
SAN DIEGO, CA 92103
619-297-0159

SCIENCE CENTER
SANTA ANA COLLEGE

RANCHO SANTIAGO COMMUNITY COLLEGE DISTRICT

1530 W. 17TH ST.
SANTA ANA, CA 92706

SANTA ANA COLLEGE

I HEREBY CERTIFY THAT THIS PLAN, SPECIFICATION OR REPORT WAS PREPARED BY ME, OR UNDER MY DIRECT SUPERVISION AND THAT I AM A DULY LICENSED PROFESSIONAL ENGINEER UNDER THE LAWS OF THE STATE OF CA.

NAME: JAMES G. MATSON
DATE: SEPTEMBER 30, 2017
REGISTRATION NUMBER: C13036 E 15951

NAME: GUY J. CARPINO
DATE: JUNE 30, 2019

NO	DESCRIPTION	DATE
2	Addendum 2	09/01/2017

ISSUANCE HISTORY - THIS SHEET

DRAWN BY: Author | REVIEW BY: Approver

HGA NO: 3584-001-00

PARTIAL POWER PLAN LEVEL 2

DATE: JULY 06, 2017

LE2.02C

ADDENDA PACKAGE

MICHAEL WALL ENGINEERING
858-638-0600
858-638-0640 (fax)
www.mwalleng.com
4115 Sorrento Valley Blvd.
San Diego, CA 92121
REGISTERED ELECTRICAL ENGINEERS

©COPYRIGHT HAMMEL, GREEN AND ABRAHAMSON, INC.

w:\PROJ16\16026\DWG\LE2.02C - PARTIAL POWER PLAN LEVEL 2.DWG Tuesday, August 29, 2017 10:38:53 AM - BRashidi

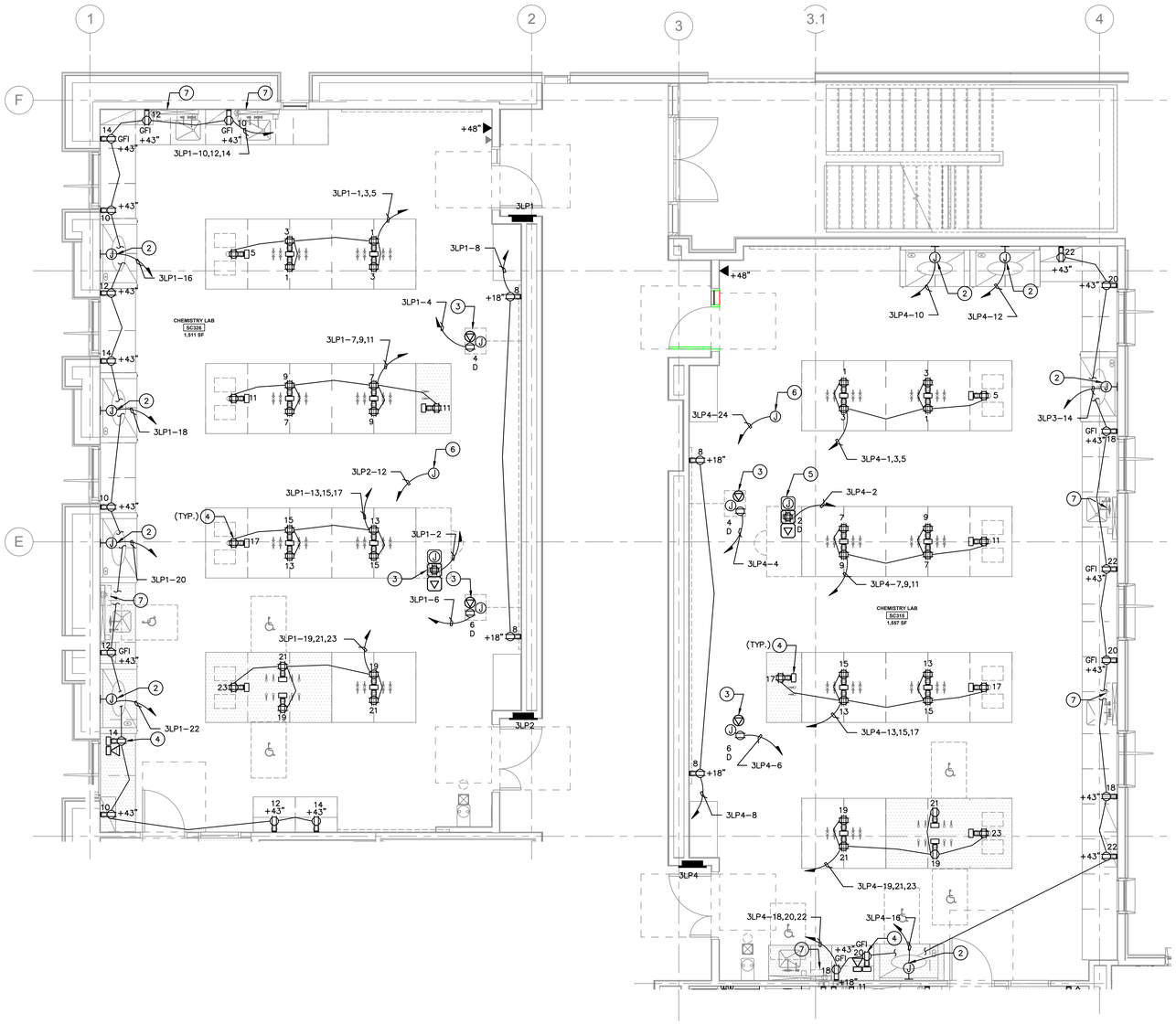

KEY NOTES:

1. PROVIDE AND INSTALL J-BOX AND REQUIRED CONNECTIONS TO SAFETY SHOWER ALARM.
2. PROVIDE J-BOX AND CONNECTION AT TOP OF CHEMICAL FUME HOOD AT +96". VERIFY MOUNTING HEIGHT WITH ARCHITECTURAL AND LF DRAWINGS BEFORE ROUGH-IN.
3. WALL MOUNT PROJECTOR. PROVIDE RECEPTACLE, VERIFY LOCATION AND MOUNTING WITH AV SERIES DRAWINGS AND SPECIFICATIONS.
4. ELECTRICAL PEDESTAL, SEE DETAIL 2/LE4.02.
5. PROVIDE AND INSTALL RECESSED FLOORBOX, WIREMOLD RFB4 SERIES.
6. PROVIDE J-BOX AND 120V CIRCUIT FOR PAPER TOWEL DISPENSERS. REQUIRED 6V DC POWER SUPPLY BY OTHERS. CONTRACTOR SHALL PROVIDE CONDUIT FROM J-BOX TO PAPER TOWEL DISPENSER LOCATIONS. SEE KEYNOTE 7 FOR PAPER TOWEL DISPENSER LOCATIONS.
7. LOCATION OF PAPER TOWEL DISPENSER. SEE KEYNOTE 6 FOR ADDITIONAL INFORMATION.

GENERAL NOTES:

1. COORDINATE ALL DEVICE MOUNTING HEIGHTS AND LOCATIONS WITH LABORATORY FURNISHING DESIGN PRIOR TO ROUGH-IN.
2. AT ISLAND BENCHES WITHOUT PIPEDROP STUB ELECTRICAL FROM BELOW FLOOR UP INTO PIPE CHASE. SEE LABORATORY FURNISHINGS DETAIL FOR LOCATION AND DIMENSIONS OF PIPE CHASE.
3. ALL OUTLETS WITHIN 6'-0" OF SINK TO BE GFI.
4. PROVIDE (1) 1-1/4" C.O. STUBBED FROM EACH WALL, FLOOR, OR WIREWAY MOUNTED TELE/DATA OUTLET TO ACCESSIBLE CEILING.
5. PROVIDE A MINIMUM OF (1) 1-1/4" C.O. STUBBED FROM EACH TELE/DATA SECTION OF DUAL CHANNEL WIREWAY TO ACCESSIBLE CEILING. THIS IS REQUIRED FOR ALL DUAL CHANNEL WIREWAY LOCATIONS, EVEN WHERE NO DATA IS SHOWN.
6. COORDINATE ALL FLOOR BOX LOCATIONS WITH LABORATORY FURNISHING DRAWINGS PRIOR TO ROUGH-IN.
7. FOR WIREWAY DETAILS SEE 1 THRU 5/LE4.01.
8. PROVIDE (1) 1" C.O. STUBBED FROM EACH PEDESTAL TELE/DATA OUTLET TO ACCESSIBLE CEILING.
9. PROVIDE INDEPENDENT HOT AND NEUTRAL CONDUCTORS FOR EACH RECEPTACLE CIRCUIT IN A HOMERUN.
10. PROVIDE A MINIMUM OF (1)1-1/4"C.O. STUBBED FROM THE TEL/DATA SECTION OF EACH FLOOR BOX TO ACCESSIBLE CEILING.

1 PARTIAL POWER PLAN LEVEL 3
1/4" = 1'-0"

hga.
1918 Main Street,Third Floor
Santa Monica , California 90405
Telephone 310.557.7600

STRUCTURAL ENGINEER
SAIFUL BOUQUET
155 N LAKE AVE
PASADENA, CA 91101
626-304-2616

MECHANICAL & PLUMBING ENGINEER
STANTEC CONSULTING INC
14130 RIVERSIDE DR. # 201
SHERMAN OAKS, CA 91423
818-377-8220

ELECTRICAL ENGINEER
FBA ENGINEERING
150 PAULARINO AVE. #A120
COSTA MESA, CA 92626
949-852-9995

CIVIL ENGINEER
KPFF CONSULTING ENGINEERS
700 SOUTH FLOWER ST. #2100
LOS ANGELES, CA 90017
213-418-0201

LANDSCAPE ARCHITECT
LYNN CAPOUYA, INC.
17992 MITCHELL SOUTH, #110
IRVINE, CA 92614
949-756-0150

LABORATORY CONSULTANT
RESEARCH FACILITIES DESIGN
3965 FIFTH AVE. #400
SAN DIEGO, CA 92103
619-297-0159

SCIENCE CENTER
SANTA ANA COLLEGE
RANCHO SANTIAGO COMMUNITY COLLEGE DISTRICT
1530 W. 17TH ST.
SANTA ANA, CA 92706

SANTA ANA COLLEGE

I HEREBY CERTIFY THAT THIS PLAN, SPECIFICATION OR REPORT WAS PREPARED BY ME OR UNDER MY DIRECT SUPERVISION AND I AM A DULY LICENSED PROFESSIONAL ENGINEER UNDER THE LAWS OF THE STATE OF CA.

NAME: JAMES G. MATSON — GUY J. CARPINO
DATE: SEPTEEMBER 30, 2017 — JUNE 30, 2019
REGISTRATION NUMBER: C13036 — E 15951

NO	DESCRIPTION	DATE
2	Addendum 2	09/01/2017

ISSUANCE HISTORY - THIS SHEET

DRAWN BY: Author — REVIEW BY: Approver

HGA NO: 3584-001-00

PARTIAL POWER PLAN LEVEL 3

DATE: JULY 06, 2017

LE2.03A

ADDENDA PACKAGE

MICHAEL WALL ENGINEERING
858-638-0600
858-638-0640 (fax)
www.mwalleng.com
4115 Sorrento Valley Blvd.
San Diego, CA 92121
REGISTERED ELECTRICAL ENGINEERS

©COPYRIGHT HAMMEL, GREEN AND ABRAHAMSON, INC.

W:\PROJ16\16026\DWG\LE2.03A - PARTIAL POWER PLAN LEVEL 3.DWG Tuesday, August 29, 2017 10:39:10 AM - BRashidi

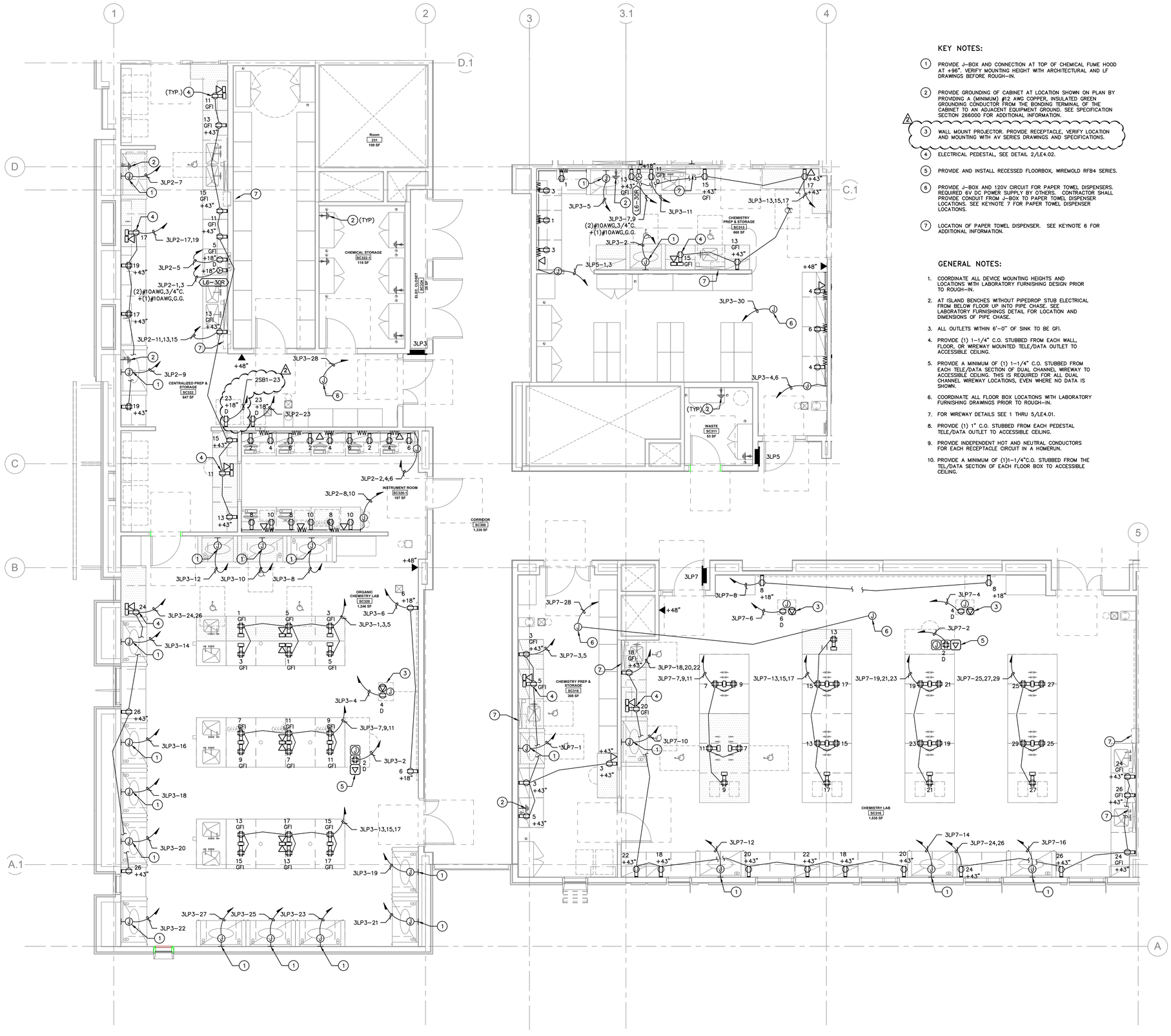

1 PARTIAL POWER PLAN LEVEL 3
1/4" = 1'-0"

KEY NOTES:

1. PROVIDE J-BOX AND CONNECTION AT TOP OF CHEMICAL FUME HOOD AT +96". VERIFY MOUNTING HEIGHT WITH ARCHITECTURAL AND LF DRAWINGS BEFORE ROUGH-IN.
2. PROVIDE GROUNDING OF CABINET AT LOCATION SHOWN ON PLAN BY PROVIDING A (MINIMUM) #12 AWG COPPER, INSULATED GREEN GROUNDING CONDUCTOR FROM THE BONDING TERMINAL OF THE CABINET TO AN ADJACENT EQUIPMENT GROUND. SEE SPECIFICATION SECTION 266000 FOR ADDITIONAL INFORMATION.
3. WALL MOUNT PROJECTOR. PROVIDE RECEPTACLE, VERIFY LOCATION AND MOUNTING WITH A/V SERIES DRAWINGS AND SPECIFICATIONS.
4. ELECTRICAL PEDESTAL, SEE DETAIL 2/LE4.02.
5. PROVIDE AND INSTALL RECESSED FLOORBOX, WIREMOLD RFB4 SERIES.
6. PROVIDE J-BOX AND 120V CIRCUIT FOR PAPER TOWEL DISPENSERS. REQUIRED 6V DC POWER SUPPLY BY OTHERS. CONTRACTOR SHALL PROVIDE CONDUIT FROM J-BOX TO PAPER TOWEL DISPENSER LOCATIONS. SEE KEYNOTE 7 FOR PAPER TOWEL DISPENSER LOCATIONS.
7. LOCATION OF PAPER TOWEL DISPENSER. SEE KEYNOTE 6 FOR ADDITIONAL INFORMATION.

GENERAL NOTES:

1. COORDINATE ALL DEVICE MOUNTING HEIGHTS AND LOCATIONS WITH LABORATORY FURNISHING DESIGN PRIOR TO ROUGH-IN.
2. AT ISLAND BENCHES WITHOUT PIPEDROP STUB ELECTRICAL FROM BELOW FLOOR UP INTO PIPE CHASE. SEE LABORATORY FURNISHINGS DETAIL FOR LOCATION AND DIMENSIONS OF PIPE CHASE.
3. ALL OUTLETS WITHIN 6'-0" OF SINK TO BE GFI.
4. PROVIDE (1) 1-1/4" C.O. STUBBED FROM EACH WALL, FLOOR, OR WIREWAY MOUNTED TELE/DATA OUTLET TO ACCESSIBLE CEILING.
5. PROVIDE A MINIMUM OF (1) 1-1/4" C.O. STUBBED FROM EACH TELE/DATA SECTION OF DUAL CHANNEL WIREWAY TO ACCESSIBLE CEILING. THIS IS REQUIRED FOR ALL DUAL CHANNEL WIREWAY LOCATIONS, EVEN WHERE NO DATA IS SHOWN.
6. COORDINATE ALL FLOOR BOX LOCATIONS WITH LABORATORY FURNISHING DRAWINGS PRIOR TO ROUGH-IN.
7. FOR WIREWAY DETAILS SEE 1 THRU 5/LE4.01.
8. PROVIDE (1) 1" C.O. STUBBED FROM EACH PEDESTAL TELE/DATA OUTLET TO ACCESSIBLE CEILING.
9. PROVIDE INDEPENDENT HOT AND NEUTRAL CONDUCTORS FOR EACH RECEPTACLE CIRCUIT IN A HOMERUN.
10. PROVIDE A MINIMUM OF (1)1-1/4"C.O. STUBBED FROM THE TEL/DATA SECTION OF EACH FLOOR BOX TO ACCESSIBLE CEILING.

hga.
1918 Main Street, Third Floor
Santa Monica, California 90405
Telephone 310.557.7600

STRUCTURAL ENGINEER
SAIFUL BOUQUET
155 N LAKE AVE
PASADENA, CA 91101
626-304-2616

MECHANICAL & PLUMBING ENGINEER
STANTEC CONSULTING INC
14130 RIVERSIDE DR. # 201
SHERMAN OAKS, CA 91423
818-377-8220

ELECTRICAL ENGINEER
FBA ENGINEERING
150 PAULARINO AVE. #A120
COSTA MESA, CA 92626
949-852-9995

CIVIL ENGINEER
KPFF CONSULTING ENGINEERS
700 SOUTH FLOWER ST. #2100
LOS ANGELES, CA 90017
213-418-0201

LANDSCAPE ARCHITECT
LYNN CAPOUYA, INC.
17992 MITCHELL SOUTH, #110
IRVINE, CA 92614
949-756-0150

LABORATORY CONSULTANT
RESEARCH FACILITIES DESIGN
3965 FIFTH AVE. #400
SAN DIEGO, CA 92103
619-297-0159

SCIENCE CENTER
SANTA ANA COLLEGE

RANCHO SANTIAGO COMMUNITY COLLEGE DISTRICT

1530 W. 17TH ST.
SANTA ANA, CA 92706

SANTA ANA COLLEGE

I HEREBY CERTIFY THAT THIS PLAN, SPECIFICATION OR REPORT WAS PREPARED BY ME OR UNDER MY DIRECT SUPERVISION AND THAT I AM A DULY LICENSED PROFESSIONAL ENGINEER UNDER THE LAWS OF THE STATE OF CA

NAME: JAMES G. MATSON — GUY J. CARPINO
DATE: SEPTEMBER 30, 2017 — JUNE 30, 2019
REGISTRATION NUMBER: C13036 — E 15951

NO	DESCRIPTION	DATE
2	Addendum 2	09/01/2017

ISSUANCE HISTORY - THIS SHEET

DRAWN BY: Author — REVIEW BY: Approver

HGA NO: 3584-001-00

PARTIAL POWER PLAN LEVEL 3

DATE: JULY 06, 2017

LE2.03B

ADDENDA PACKAGE

MICHAEL WALL ENGINEERING
858-638-0600
858-638-0640 (fax)
www.mwalleng.com
4115 Sorrento Valley Blvd.
San Diego, CA 92121
REGISTERED ELECTRICAL ENGINEERS

©COPYRIGHT HAMMEL, GREEN AND ABRAHAMSON, INC.

W:\PROJ16\16026\DWG\LE2.03B - PARTIAL POWER PLAN LEVEL 3.DWG Tuesday, August 29, 2017 10:39:30 AM - BRashidi

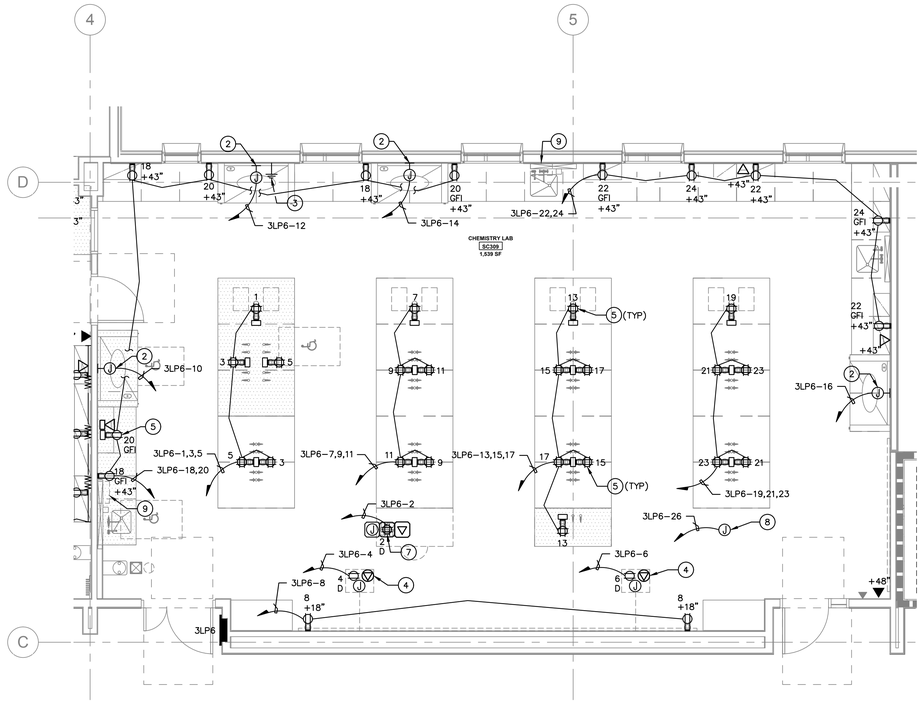

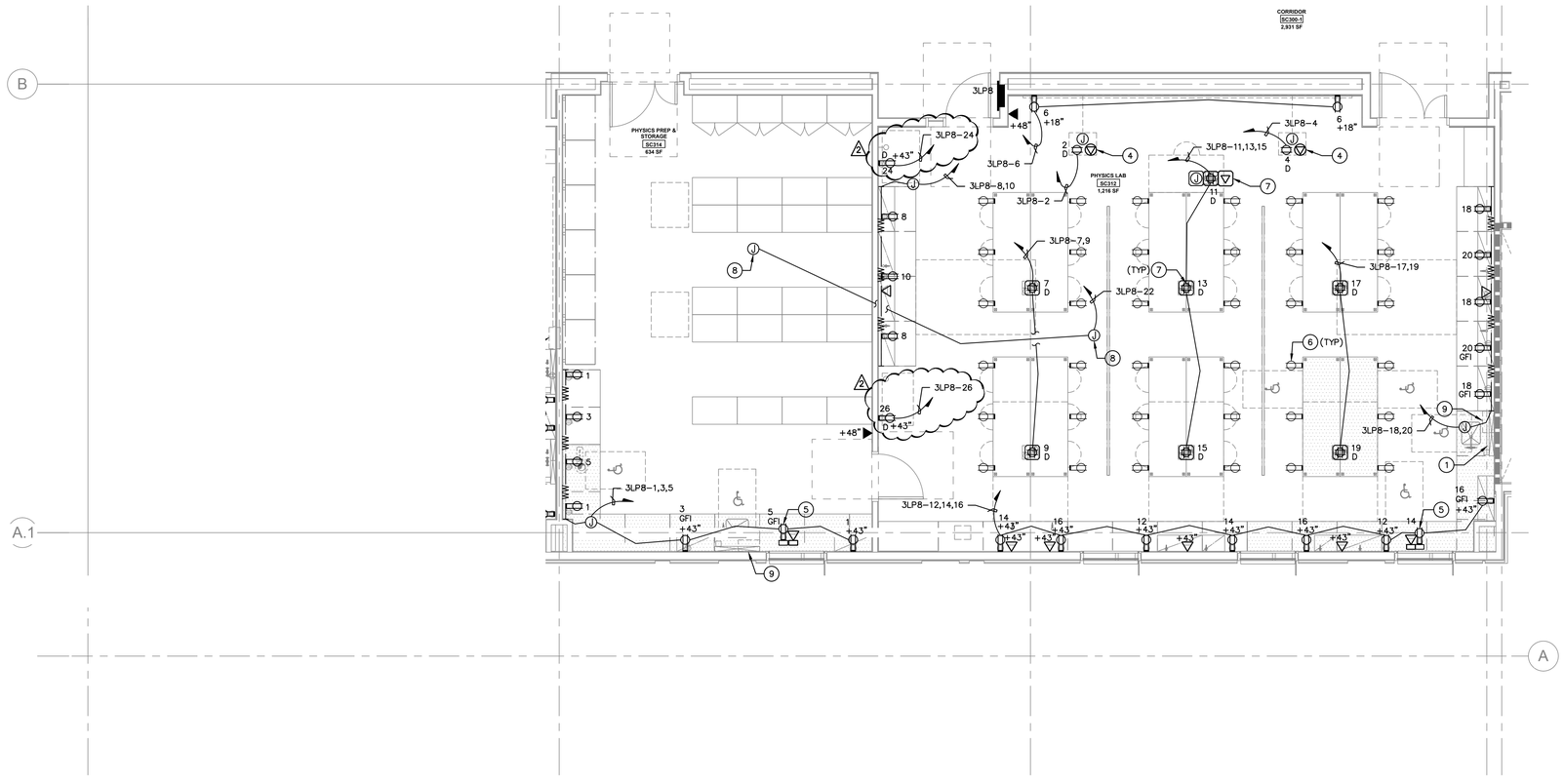

1 PARTIAL POWER PLAN LEVEL 3
1/4" = 1'-0"

KEY NOTES:

1. PIPEDROP, UTILIZE FOR CONCEALMENT OF CONDUIT. SEE DETAIL 6/LE301 AND 1/LE302.
2. PROVIDE J-BOX AND CONNECTION AT TOP OF CHEMICAL FUME HOOD AT +96". VERIFY MOUNTING HEIGHT WITH ARCHITECTURAL AND LF DRAWINGS BEFORE ROUGH-IN.
3. PROVIDE GROUNDING OF CABINET AT LOCATION SHOWN ON PLAN BY PROVIDING A (MINIMUM) #12 AWG COPPER, INSULATED GREEN GROUNDING CONDUCTOR FROM THE BONDING TERMINAL OF THE CABINET TO AN ADJACENT EQUIPMENT GROUND. SEE SPECIFICATION SECTION 266000 FOR ADDITIONAL INFORMATION.
4. WALL MOUNT PROJECTOR. PROVIDE RECEPTACLE, VERIFY LOCATION AND MOUNTING WITH AV SERIES DRAWINGS AND SPECIFICATIONS.
5. ELECTRICAL PEDESTAL, SEE DETAIL 2/LE4.02.
6. PROVIDE AND INSTALL J-BOX AND RECEPTACLE TO MOVEABLE TABLE. PROVIDE AND INSTALL S.O. CORD (8' MIN.) AND PLUG (5-20P). SEE DETAIL 3/LE4.02.
7. PROVIDE AND INSTALL RECESSED FLOORBOX, WIREMOLD RFB4 SERIES.
8. PROVIDE J-BOX AND 120V CIRCUIT FOR PAPER TOWEL DISPENSERS. REQUIRED 6V DC POWER SUPPLY BY OTHERS. CONTRACTOR SHALL PROVIDE CONDUIT FROM J-BOX TO PAPER TOWEL DISPENSER LOCATIONS. SEE KEYNOTE 9 FOR PAPER TOWEL DISPENSER LOCATIONS.
9. LOCATION OF PAPER TOWEL DISPENSER. SEE KEYNOTE 8 FOR ADDITIONAL INFORMATION.

GENERAL NOTES:

1. COORDINATE ALL DEVICE MOUNTING HEIGHTS AND LOCATIONS WITH LABORATORY FURNISHING DESIGN PRIOR TO ROUGH-IN.
2. AT ISLAND BENCHES WITHOUT PIPEDROP STUB ELECTRICAL FROM BELOW FLOOR UP INTO PIPE CHASE. SEE LABORATORY FURNISHINGS DETAIL FOR LOCATION AND DIMENSIONS OF PIPE CHASE.
3. ALL OUTLETS WITHIN 6'-0" OF SINK TO BE GFI.
4. PROVIDE (1) 1-1/4" C.O. STUBBED FROM EACH WALL, FLOOR, OR WIREWAY MOUNTED TELE/DATA OUTLET TO ACCESSIBLE CEILING.
5. PROVIDE A MINIMUM OF (1) 1-1/4" C.O. STUBBED FROM EACH TELE/DATA SECTION OF DUAL CHANNEL WIREWAY TO ACCESSIBLE CEILING. THIS IS REQUIRED FOR ALL DUAL CHANNEL WIREWAY LOCATIONS, EVEN WHERE NO DATA IS SHOWN.
6. COORDINATE ALL FLOOR BOX LOCATIONS WITH LABORATORY FURNISHING DRAWINGS PRIOR TO ROUGH-IN.
7. FOR WIREWAY DETAILS SEE 1 THRU 5/LE4.01.
8. PROVIDE (1) 1" C.O. STUBBED FROM EACH PEDESTAL TELE/DATA OUTLET TO ACCESSIBLE CEILING.
9. PROVIDE INDEPENDENT HOT AND NEUTRAL CONDUCTORS FOR EACH RECEPTACLE CIRCUIT IN A HOMERUN.
10. PROVIDE A MINIMUM OF (1)1-1/4"C.O. STUBBED FROM THE TEL/DATA SECTION OF EACH FLOOR BOX TO ACCESSIBLE CEILING.

hga.
1918 Main Street,Third Floor
Santa Monica , California 90405
Telephone 310.557.7600

STRUCTURAL ENGINEER
SAIFUL BOUQUET
155 N LAKE AVE
PASADENA, CA 91101
626-304-2616

MECHANICAL & PLUMBING ENGINEER
STANTEC CONSULTING INC
14130 RIVERSIDE DR. # 201
SHERMAN OAKS, CA 91423
818-377-8220

ELECTRICAL ENGINEER
FBA ENGINEERING
150 PAULARINO AVE. #A120
COSTA MESA, CA 92626
949-852-9995

CIVIL ENGINEER
KPFF CONSULTING ENGINEERS
700 SOUTH FLOWER ST. #2100
LOS ANGELES, CA 90017
213-418-0201

LANDSCAPE ARCHITECT
LYNN CAPOUYA, INC.
17992 MITCHELL SOUTH, #110
IRVINE, CA 92614
949-756-0150

LABORATORY CONSULTANT
RESEARCH FACILITIES DESIGN
3965 FIFTH AVE. #400
SAN DIEGO, CA 92103
619-297-0159

SCIENCE CENTER
SANTA ANA COLLEGE

RANCHO SANTIAGO COMMUNITY COLLEGE DISTRICT

1530 W. 17TH ST.
SANTA ANA, CA 92706

SANTA ANA COLLEGE

I HEREBY CERTIFY THAT THIS PLAN, SPECIFICATION OR REPORT WAS PREPARED BY ME, OR UNDER MY DIRECT SUPERVISION AND THAT I AM A DULY LICENSED PROFESSIONAL ENGINEER UNDER THE LAWS OF THE STATE OF CA

NAME: JAMES G. MATSON — GUY J. CARPINO
DATE: SEPTEMBER 30, 2017 — JUNE 30, 2019
REGISTRATION NUMBER: C13036 — E 15961

NO	DESCRIPTION	DATE
2	Addendum 2	09/01/2017

ISSUANCE HISTORY - THIS SHEET

DRAWN BY: Author — REVIEW BY: Approver

HGA NO: 3584-001-00

PARTIAL POWER PLAN LEVEL 3

DATE: JULY 06, 2017

MICHAEL WALL ENGINEERING
858-638-0600
858-638-0640 (fax)
www.mwalleng.com
4115 Sorrento Valley Blvd.
San Diego, CA 92121
REGISTERED ELECTRICAL ENGINEERS

LE2.03C

ADDENDA PACKAGE

©COPYRIGHT HAMMEL, GREEN AND ABRAHAMSON, INC.

W:\PROJ16\16026\DWG\LE2.03C - PARTIAL POWER PLAN LEVEL 3.DWG Tuesday, August 29, 2017 10:39:46 AM - BRashidi

MOUNTING: RECESSED | PANEL 2LP8 | VOLTAGE: 208Y/120V 3PH 4W
BUS: 225A
NEMA: 1 | MAIN: 150A
STATUS: NEW | FEEDER: 225A

Description	A	B	C	L	R	M	P	A				A	P	M	R	L	A	B	C	Description
214 WW RCPT.	720						1	20	1	A - -	2	20	1				180			214 RCPT.
214 WW RCPT.		540					1	20	3	- B -	4	20	1					1000		214 EQUIP.
214 PURIF.			1000				1	20	5	- - C	6	20	1							SPARE
214 CFH	1000						1	20	7	A - -	8	20	1				180			214 RCPT.
214 EQUIP.		1000					1	20	9	- B -	10	20	1					180		214 RCPT.
214 U.C. GLSWSH			1800				2	30	11	- - C	12	20	1						1040	214 ATCLV CNTRL
-----	1800						-	-	13	A - -	14	20	1				60			214 CNPY HD LTG
214 U.C. GLSWSH		1000					1	20	15	- B -	16	20	1							SPARE
214 EQUIP.			1000				1	20	17	- - C	18	20	1							SPARE
SPARE							1	20	19	A - -	20	20	1							SPARE
SPARE							1	20	21	- B -	22	20	1							SPARE
SPARE							1	20	23	- - C	24	20	1							SPARE
SPARE							1	20	25	A - -	26	20	1							SPARE
SPARE							1	20	27	- B -	28	20	1							SPARE
SPARE							1	20	29	- - C	30	20	1							SPARE
SPARE							1	20	31	A - -	32	20	1							SPARE
SPARE							1	20	33	- B -	34	20	1							SPARE
SPARE							1	20	35	- - C	36	20	1							SPARE
SPARE							1	20	37	A - -	38	20	1							SPARE
SPARE							1	20	39	- B -	40	20	1							SPARE
SPARE							1	20	41	- - C	42	20	1							SPARE
	3520	2540	3800														420	1180	1040	

NOTES: PHASE SUBTOTALS:
A - 3940 VA SUBTOTAL= 12500 VA
B - 3720 VA X 0.25LCL= 3125 VA
C - 4840 VA TOTAL= 15625 VA
43 AMPS

MOUNTING: RECESSED | PANEL 2LP4 | VOLTAGE: 208Y/120V 3PH 4W
BUS: 225A
NEMA: 1 | MAIN: 150A
STATUS: NEW | FEEDER: 225A

Description	A	B	C	L	R	M	P	A				A	P	M	R	L	A	B	C	Description
217 PEDESTALS	720						1	20	1	A - -	2	20	1				720			217 FLOORBOX
217 PEDESTALS		720					1	20	3	- B -	4	20	1					1000		217 PROJECTOR
217 PEDESTALS			720				1	20	5	- - C	6	20	1						1000	217 PROJECTOR
217 PEDESTALS	720						1	20	7	A - -	8	20	1				360			217 RCPT.
217 PEDESTALS		720					1	20	9	- B -	10	20	1					360		217 RCPT.
217 PEDESTALS			720				1	20	11	- - C	12	20	1						360	217 RCPT.
217 PEDESTALS	720						1	20	13	A - -	14	20	1				1000			217 EXAM LIGHT
217 PEDESTALS		720					1	20	15	- B -	16	20	1					180		217 RCPT.
217 PEDESTALS			720				1	20	17	- - C	18	20	1							SPARE
217 PEDESTALS	720						1	20	19	A - -	20	20	1							SPARE
217 PEDESTALS		720					1	20	21	- B -	22	20	1							SPARE
217 PEDESTALS			720				1	20	23	- - C	24	20	1							SPARE
SPARE							1	20	25	A - -	26	20	1							SPARE
SPARE							1	20	27	- B -	28	20	1							SPARE
SPARE							1	20	29	- - C	30	20	1							SPARE
SPARE							1	20	31	A - -	32	20	1							SPARE
SPARE							1	20	33	- B -	34	20	1							SPARE
SPARE							1	20	35	- - C	36	20	1							SPARE
SPARE							1	20	37	A - -	38	20	1							SPARE
SPARE							1	20	39	- B -	40	20	1							SPARE
SPARE							1	20	41	- - C	42	20	1							SPARE
	2880	2880	2880														2080	1540	1360	

NOTES: PHASE SUBTOTALS:
A - 4960 VA SUBTOTAL= 13620 VA
B - 4420 VA X 0.25LCL= 3405 VA
C - 4240 VA TOTAL= 17025 VA
47 AMPS

MOUNTING: RECESSED | PANEL 1LP4 | VOLTAGE: 208Y/120V 3PH 4W
BUS: 225A
NEMA: 1 | MAIN: 150A
STATUS: NEW | FEEDER: 225A

Description	A	B	C	L	R	M	P	A				A	P	M	R	L	A	B	C	Description
120 WW RCPT.	720				4		1	20	1	A - -	2	20	1				720			118 FLOORBOX
120 WW RCPT.		720			4		1	20	3	- B -	4	20	1					720		118 FLOORBOX
120 WW RCPT.			720		4		1	20	5	- - C	6	20	1						720	118 FLOORBOX
120 WW RCPT.	720				4		1	20	7	A - -	8	20	1				720			118 FLOORBOX
120 WW RCPT.		360			2		1	20	9	- B -	10	20	1					720		118 FLOORBOX
120 WW RCPT.			360		2		1	20	11	- - C	12	20	1						720	118 FLOORBOX
120 WW RCPT.	540				3		1	20	13	A - -	14	20	1				720			118 FLOORBOX
120 WW RCPT.		540			3		1	20	15	- B -	16	20	1					360		118 WW RCPT.
118 WW / PED.			360		2		1	20	17	- - C	18	20	1						180	118 WW RCPT.
118 WW RCPT.	180				1		1	20	19	A - -	20	20	1				360			118 RCPT.
118 RCPT.		540			3		1	20	21	- B -	22	20	1					1000		118 PROJECTOR
118 RCPT.			360		2		1	20	23	- - C	24	20	1							SPARE
SPARE							1	20	25	A - -	26	20	1							SPARE
SPARE							1	20	27	- B -	28	20	1							SPARE
SPARE							1	20	29	- - C	30	20	1							SPARE
SPARE							1	20	31	A - -	32	20	1							SPARE
SPARE							1	20	33	- B -	34	20	1							SPARE
SPARE							1	20	35	- - C	36	20	1							SPARE
SPARE							1	20	37	A - -	38	20	1							SPARE
SPARE							1	20	39	- B -	40	20	1							SPARE
SPARE							1	20	41	- - C	42	20	1							SPARE
	2160	2160	1800														2520	2800	1620	

NOTES: PHASE SUBTOTALS:
A - 4680 VA SUBTOTAL= 13060 VA
B - 4960 VA X 0.25LCL= 3265 VA
C - 3420 VA TOTAL= 16325 VA
45 AMPS

MOUNTING: RECESSED | PANEL 1LP1 | VOLTAGE: 208Y/120V 3PH 4W
BUS: 225A
NEMA: 1 | MAIN: 150A
STATUS: NEW | FEEDER: 225A

Description	A	B	C	L	R	M	P	A				A	P	M	R	L	A	B	C	Description
134 OHSC RCPT	720				4		1	20	1	A - -	2	30	2				1800			134 EQUIP.
134 OHSC RCPT		720			4		1	20	3	- B -	4	-	-					1800		-----
134 OHSC RCPT			720		4		1	20	5	- - C	6	30	2						1800	134 EQUIP.
134 OHSC RCPT	720				4		1	20	7	A - -	8	-	-				1800			-----
134 OHSC RCPT		720			4		1	20	9	- B -	10	30	2					1800		134 EQUIP.
134 OHSC RCPT			720		4		1	20	11	- - C	12	-	-						1800	-----
134 EQUIP.	1800						2	30	13	A - -	14	30	2				1800			134 EQUIP.
-----		1800					-	-	15	- B -	16	-	-					1800		-----
134 RCPT.			180				1	20	17	- - C	18	20	1						1000	134 EQUIP.
134 EQUIP.	1000						1	20	19	A - -	20	20	1				1000			134 EQUIP.
134 EQUIP.		1000					1	20	21	- B -	22	20	1					1000		134 WW RCPT.
134 EQUIP.			1000				1	20	23	- - C	24	20	1						1000	134 WW RCPT.
134 CORD REEL	1000						1	20	25	A - -	26	20	1				1000			134 WW RCPT.
134 CORD REEL		1000					1	20	27	- B -	28	20	1					1000		134 EQUIP.
134 PROJECTOR			1000				1	20	29	- - C	30	20	1						1000	134 EQUIP.
134 PROJ. SCREEN	500						1	20	31	A - -	32	20	1				1000			134 EQUIP.
SPARE							1	20	33	- B -	34	20	1							SPARE
SPARE							1	20	35	- - C	36	20	1							SPARE
SPARE							1	20	37	A - -	38	20	1							SPARE
SPARE							1	20	39	- B -	40	20	1							SPARE
SPARE							1	20	41	- - C	42	20	1							SPARE
	5740	5240	3620														8400	7400	6600	

NOTES: PHASE SUBTOTALS:
A - 14140 VA SUBTOTAL= 37000 VA
B - 12640 VA X 0.25LCL= 9250 VA
C - 10220 VA TOTAL= 46250 VA
128 AMPS

MOUNTING: RECESSED | PANEL 2LP9 | VOLTAGE: 208Y/120V 3PH 4W
BUS: 225A
NEMA: 1 | MAIN: 150A
STATUS: NEW | FEEDER: 225A

Description	A	B	C	L	R	M	P	A				A	P	M	R	L	A	B	C	Description
212 BENCH RCPT.	720						1	20	1	A - -	2	20	1				720			212 FLOORBOX
212 BENCH RCPT.		720					1	20	3	- B -	4	20	1					1000		212 PROJECTOR
212 BENCH RCPT.			720				1	20	5	- - C	6	20	1						1000	212 PROJECTOR
212 BENCH RCPT.	720						1	20	7	A - -	8	20	1				360			212 PEDESTAL
212 BENCH RCPT.		720					1	20	9	- B -	10	20	1					360		212 RCPT.
212 BENCH RCPT.			720				1	20	11	- - C	12	20	1						540	212 RCPT.
212 BENCH RCPT.	720						1	20	13	A - -	14	20	1				720			212 RCPT.
212 BENCH RCPT.		720					1	20	15	- B -	16	20	1					540		212 RCPT.
212 BENCH RCPT.			720				1	20	17	- - C	18	20	1						1000	212 CFH
212 BENCH RCPT.	720						1	20	19	A - -	20	20	1				1000			212 EQUIP.
212 BENCH RCPT.		720					1	20	21	- B -	22	20	1					1000		212 EQUIP.
212 BENCH RCPT.			720				1	20	23	- - C	24	20	1						1000	212 EQUIP.
SPARE							1	20	25	A - -	26	20	1				1000			212 REFRIG.
SPARE							1	20	27	- B -	28	20	1							SPARE
SPARE							1	20	29	- - C	30	20	1							SPARE
SPARE							1	20	31	A - -	32	20	1							SPARE
SPARE							1	20	33	- B -	34	20	1							SPARE
SPARE							1	20	35	- - C	36	20	1							SPARE
SPARE							1	20	37	A - -	38	20	1							SPARE
SPARE							1	20	39	- B -	40	20	1							SPARE
SPARE							1	20	41	- - C	42	20	1							SPARE
	2880	2880	2880														3800	2900	3540	

NOTES: PHASE SUBTOTALS:
A - 6680 VA SUBTOTAL= 18880 VA
B - 5780 VA X 0.25LCL= 4720 VA
C - 6420 VA TOTAL= 23600 VA
66 AMPS

MOUNTING: RECESSED | PANEL 2LP5 | VOLTAGE: 208Y/120V 3PH 4W
BUS: 225A
NEMA: 1 | MAIN: 150A
STATUS: NEW | FEEDER: 225A

Description	A	B	C	L	R	M	P	A				A	P	M	R	L	A	B	C	Description
217-1 EXAM LIGHT	1000						1	20	1	A - -	2	20	1				1000			215 CFH
217-1 EXAM LIGHT		1000					1	20	3	- B -	4	20	1					1000		215 EQUIP.
217-1 EQUIP.			1000				1	20	5	- - C	6	20	1							SPARE
217-1 RCPT.	540						1	20	7	A - -	8	20	1				180			215 RCPT.
217-1 RCPT.		540					1	20	9	- B -	10	20	1							SPARE
SPARE							1	20	11	- - C	12	20	1							SPARE
SPARE							1	20	13	A - -	14	20	1							SPARE
SPARE							1	20	15	- B -	16	20	1							SPARE
SPARE							1	20	17	- - C	18	20	1							SPARE
SPARE							1	20	19	A - -	20	20	1							SPARE
SPARE							1	20	21	- B -	22	20	1							SPARE
SPARE							1	20	23	- - C	24	20	1							SPARE
SPARE							1	20	25	A - -	26	20	1							SPARE
SPARE							1	20	27	- B -	28	20	1							SPARE
SPARE							1	20	29	- - C	30	20	1							SPARE
SPARE							1	20	31	A - -	32	20	1							SPARE
SPARE							1	20	33	- B -	34	20	1							SPARE
SPARE							1	20	35	- - C	36	20	1							SPARE
SPARE							1	20	37	A - -	38	20	1							SPARE
SPARE							1	20	39	- B -	40	20	1							SPARE
SPARE							1	20	41	- - C	42	20	1							SPARE
	1540	1540	1000														1180	1000	0	

NOTES: PHASE SUBTOTALS:
A - 2720 VA SUBTOTAL= 6260 VA
B - 2540 VA X 0.25LCL= 1565 VA
C - 1000 VA TOTAL= 7825 VA
22 AMPS

MOUNTING: RECESSED | PANEL 2LP1 | VOLTAGE: 208Y/120V 3PH 4W
BUS: 225A
NEMA: 1 | MAIN: 150A
STATUS: NEW | FEEDER: 225A

Description	A	B	C	L	R	M	P	A				A	P	M	R	L	A	B	C	Description
226 BENCH RCPT.	900						1	20	1	A - -	2	20	1				1000			226 FLOORBOX
226 BENCH RCPT.		720					1	20	3	- B -	4	20	1					1000		226 PROJECTOR
226 BENCH RCPT.			720				1	20	5	- - C	6	20	1						1000	226 PROJECTOR
226 BENCH RCPT.	900						1	20	7	A - -	8	20	1				360			226 RCPT.
226 BENCH RCPT.		720					1	20	9	- B -	10	20	1					540		226 RCPT.
226 BENCH RCPT.			720				1	20	11	- - C	12	20	1						540	226 RCPT.
226 BENCH RCPT.	900						1	20	13	A - -	14	20	1				360			226 RCPT.
226 BENCH RCPT.		720					1	20	15	- B -	16	20	1					1000		226 EQUIP.
226 BENCH RCPT.			720				1	20	17	- - C	18	20	1						1000	226 EQUIP.
226 BENCH RCPT.	900						1	20	19	A - -	20	20	1				540			226 WW RCPT.
226 BENCH RCPT.		720					1	20	21	- B -	22	20	1					360		226 WW RCPT.
226 BENCH RCPT.			720				1	20	23	- - C	24	20	1							SPARE
SPARE							1	20	25	A - -	26	20	1							SPARE
SPARE							1	20	27	- B -	28	20	1							SPARE
SPARE							1	20	29	- - C	30	20	1							SPARE
SPARE							1	20	31	A - -	32	20	1							SPARE
SPARE							1	20	33	- B -	34	20	1							SPARE
SPARE							1	20	35	- - C	36	20	1							SPARE
SPARE							1	20	37	A - -	38	20	1							SPARE
SPARE							1	20	39	- B -	40	20	1							SPARE
SPARE							1	20	41	- - C	42	20	1							SPARE
	3600	2880	2880														2260	2900	2540	

NOTES: PHASE SUBTOTALS:
A - 5860 VA SUBTOTAL= 17060 VA
B - 5780 VA X 0.25LCL= 4265 VA
C - 5420 VA TOTAL= 21325 VA
59 AMPS

MOUNTING: RECESSED | PANEL 1LP2 | VOLTAGE: 208Y/120V 3PH 4W
BUS: 225A
NEMA: 1 | MAIN: 150A
STATUS: NEW | FEEDER: 225A

Description	A	B	C	L	R	M	P	A				A	P	M	R	L	A	B	C	Description
134 OHSC RCPT	720				4		1	20	1	A - -	2	30	2				1800			134 EQUIP.
134 OHSC RCPT		720			4		1	20	3	- B -	4	-	-					1800		-----
134 OHSC RCPT			720		4		1	20	5	- - C	6	30	2						1800	134 EQUIP.
134 OHSC RCPT	720				4		1	20	7	A - -	8	-	-				1800			-----
134 OHSC RCPT		720			4		1	20	9	- B -	10	20	1					1000		134 EQUIP.
134 OHSC RCPT			720		4		1	20	11	- - C	12	20	1						1000	134 EQUIP.
134 EQUIP.	1800						2	30	13	A - -	14	20	1				540			134 RCPT.
-----		1800					-	-	15	- B -	16	30	2					1800		134 EQUIP.
134 FLOORBOX			720				1	20	17	- - C	18	-	-						1800	-----
134 FLOORBOX	720						1	20	19	A - -	20	20	1				1000			134 EQUIP.
134 FLOORBOX		720					1	20	21	- B -	22	20	1					1000		134 EQUIP.
134 CORD REEL			1000				1	20	23	- - C	24	20	1						360	134 RCPT.
134 CORD REEL	1000						1	20	25	A - -	26	20	1				1000			134 EQUIP.
134 PROJECTOR		1000			1		1	20	27	- B -	28	20	1					1000		134 EQUIP.
134 PROJ. SCREEN			500				1	20	29	- - C	30	20	1						1000	134 EQUIP.
132 WW RCPT.	540				3		1	20	31	A - -	32	20	1				150			PT DISP.
132 WW RCPT.		540			3		1	20	33	- B -	34	20	1							SPARE
132 WW RCPT.			540		3		1	20	35	- - C	36	20	1							SPARE
132 WW DED. REC	1000						1	20	37	A - -	38	20	1							SPARE
132 WW DED. REC		1000					1	20	39	- B -	40	20	1							SPARE
SPARE							1	20	41	- - C	42	20	1							SPARE
	6500	6500	4200														6290	6600	5960	

NOTES: PHASE SUBTOTALS:
A - 12790 VA SUBTOTAL= 36050 VA
B - 13100 VA X 0.25LCL= 9013 VA
C - 10160 VA TOTAL= 45063 VA
125 AMPS

MOUNTING: RECESSED | PANEL 2SB1 | VOLTAGE: 208Y/120V 3PH 4W
BUS: 225A
NEMA: 1 | MAIN: 150A
STATUS: NEW | FEEDER: 225A

Description	A	B	C	L	R	M	P	A				A	P	M	R	L	A	B	C	Description
220 EQUIP.	1000						1	20	1	A - -	2	20	1							SPARE
220 EQUIP.		1000					1	20	3	- B -	4	20	1							SPARE
214 EQUIP.			1800				2	30	5	- - C	6	20	1							SPARE
-----	1800						-	-	7	A - -	8	20	1							SPARE
214 EQUIP.		1000					1	20	9	- B -	10	20	1							SPARE
214 EQUIP.			1000				1	20	11	- - C	12	20	1							SPARE
214 EQUIP.	1000						1	20	13	A - -	14	20	1							SPARE
214 EQUIP.		1000					1	20	15	- B -	16	20	1							SPARE
214 EQUIP.			1000				1	20	17	- - C	18	20	1							SPARE
214 EQUIP.	1000						1	20	19	A - -	20	20	1							SPARE
214 EQUIP.		1000					1	20	21	- B -	22	20	1							SPARE
322 EQUIP.			1000				1	20	23	- - C	24	20	1							SPARE
SPARE							1	20	25	A - -	26	20	1							SPARE
SPARE							1	20	27	- B -	28	20	1							SPARE
SPARE							1	20	29	- - C	30	20	1							SPARE
SPARE							1	20	31	A - -	32	20	1							SPARE
SPARE							1	20	33	- B -	34	20	1							SPARE
SPARE							1	20	35	- - C	36	20	1							SPARE
SPARE							1	20	37	A - -	38	20	1							SPARE
SPARE							1	20	39	- B -	40	20	1							SPARE
SPARE							1	20	41	- - C	42	20	1							SPARE
	4800	4000	4800														0	0	0	

NOTES: PHASE SUBTOTALS:
A - 4800 VA SUBTOTAL= 13600 VA
B - 4000 VA X 0.25LCL= 3400 VA
C - 4800 VA TOTAL= 17000 VA
47 AMPS

MOUNTING: RECESSED | PANEL 2LP6 | VOLTAGE: 208Y/120V 3PH 4W
BUS: 225A
NEMA: 1 | MAIN: 150A
STATUS: NEW | FEEDER: 225A

Description	A	B	C	L	R	M	P	A				A	P	M	R	L	A	B	C	Description
213 BENCH RCPT.	720						1	20	1	A - -	2	20	1				720			213 FLOORBOX
213 BENCH RCPT.		720					1	20	3	- B -	4	20	1					1000		213 PROJECTOR
213 BENCH RCPT.			540				1	20	5	- - C	6	20	1						1000	213 PROJECTOR
213 BENCH RCPT.	720						1	20	7	A - -	8	20	1				360			213 RCPT.
213 BENCH RCPT.		720					1	20	9	- B -	10	20	1					540		213 RCPT.
213 BENCH RCPT.			540				1	20	11	- - C	12	20	1						540	213 RCPT.
213 BENCH RCPT.	720						1	20	13	A - -	14	20	1				360			213 RCPT.
213 BENCH RCPT.		720					1	20	15	- B -	16	20	1					1000		213 CFH
213 BENCH RCPT.			540				1	20	17	- - C	18	20	1						540	213 RCPT.
213 BENCH RCPT.	720						1	20	19	A - -	20	20	1				540			213 RCPT.
213 BENCH RCPT.		720					1	20	21	- B -	22	20	1					360		213 RCPT.
213 BENCH RCPT.			540				1	20	23	- - C	24	20	1						1000	213 EQUIP.
SPARE							1	20	25	A - -	26	20	1				1000			213 EQUIP.
SPARE							1	20	27	- B -	28	20	1							SPARE
SPARE							1	20	29	- - C	30	20	1							SPARE
SPARE							1	20	31	A - -	32	20	1							SPARE
SPARE							1	20	33	- B -	34	20	1							SPARE
SPARE							1	20	35	- - C	36	20	1							SPARE
SPARE							1	20	37	A - -	38	20	1							SPARE
SPARE							1	20	39	- B -	40	20	1							SPARE
SPARE							1	20	41	- - C	42	20	1							SPARE
	2880	2880	2160														2980	2900	3080	

NOTES: PHASE SUBTOTALS:
A - 5860 VA SUBTOTAL= 16880 VA
B - 5780 VA X 0.25LCL= 4220 VA
C - 5240 VA TOTAL= 21100 VA
59 AMPS

MOUNTING: RECESSED | PANEL 2LP2 | VOLTAGE: 208Y/120V 3PH 4W
BUS: 225A
NEMA: 1 | MAIN: 150A
STATUS: NEW | FEEDER: 225A

Description	A	B	C	L	R	M	P	A				A	P	M	R	L	A	B	C	Description
220 OHSC RCPT.	720						1	20	1	A - -	2	20	1				1000			220 CFH
220 OHSC RCPT.		720					1	20	3	- B -	4	20	1					360		220 RCPT.
220 EQUIP.			1000				1	20	5	- - C	6	20	1						360	220 RCPT.
220 EQUIP.	1000						1	20	7	A - -	8	20	1							SPARE
220 EQUIP.		1000					1	20	9	- B -	10	20	1							SPARE
220 EQUIP.			1000				1	20	11	- - C	12	20	1							SPARE
SPARE							1	20	13	A - -	14	20	1							SPARE
SPARE							1	20	15	- B -	16	20	1							SPARE
SPARE							1	20	17	- - C	18	20	1							SPARE
SPARE							1	20	19	A - -	20	20	1							SPARE
SPARE							1	20	21	- B -	22	20	1							SPARE
SPARE							1	20	23	- - C	24	20	1							SPARE
SPARE							1	20	25	A - -	26	20	1							SPARE
SPARE							1	20	27	- B -	28	20	1							SPARE
SPARE							1	20	29	- - C	30	20	1							SPARE
SPARE							1	20	31	A - -	32	20	1							SPARE
SPARE							1	20	33	- B -	34	20	1							SPARE
SPARE							1	20	35	- - C	36	20	1							SPARE
SPARE							1	20	37	A - -	38	20	1							SPARE
SPARE							1	20	39	- B -	40	20	1							SPARE
SPARE							1	20	41	- - C	42	20	1							SPARE
	1720	1720	2000														1000	360	360	

NOTES: PHASE SUBTOTALS:
A - 2720 VA SUBTOTAL= 7160 VA
B - 2080 VA X 0.25LCL= 1790 VA
C - 2360 VA TOTAL= 8950 VA
25 AMPS

MOUNTING: RECESSED | PANEL 1LP3 | VOLTAGE: 208Y/120V 3PH 4W
BUS: 225A
NEMA: 1 | MAIN: 150A
STATUS: NEW | FEEDER: 225A

Description	A	B	C	L	R	M	P	A				A	P	M	R	L	A	B	C	Description
122 FLOORBOX	720						1	20	1	A - -	2	20	1				360			122 WW RCPT.
122 FLOORBOX		720					1	20	3	- B -	4	20	1					180		122 WW RCPT.
122 FLOORBOX			720				1	20	5	- - C	6	20	1						540	122 RCPT.
122 FLOORBOX	720						1	20	7	A - -	8	20	1				360			122 RCPT.
122 FLOORBOX		720					1	20	9	- B -	10	20	1					180		122 WW RCPT.
122 FLOORBOX			720				1	20	11	- - C	12	20	1						180	122 PEDESTAL
122 FLOORBOX	720						1	20	13	A - -	14	20	1				1000			122 PROJECTOR
122 FLOORBOX		720					1	20	15	- B -	16	20	1					1000		122 PROJECTOR
122 FLOORBOX			720				1	20	17	- - C	18	20	1						360	122 RCPT.
SPARE							1	20	19	A - -	20	20	1				1000			122 DED. REC.
SPARE							1	20	21	- B -	22	20	1					1000		122 DED. REC.
SPARE							1	20	23	- - C	24	20	1							SPARE
SPARE							1	20	25	A - -	26	20	1							SPARE
SPARE							1	20	27	- B -	28	20	1							SPARE
SPARE							1	20	29	- - C	30	20	1							SPARE
SPARE							1	20	31	A - -	32	20	1							SPARE
SPARE							1	20	33	- B -	34	20	1							SPARE
SPARE							1	20	35	- - C	36	20	1							SPARE
SPARE							1	20	37	A - -	38	20	1							SPARE
SPARE							1	20	39	- B -	40	20	1							SPARE
SPARE							1	20	41	- - C	42	20	1							SPARE
	2160	2160	2160														2720	2360	1080	

NOTES: PHASE SUBTOTALS:
A - 4880 VA SUBTOTAL= 12640 VA
B - 4520 VA X 0.25LCL= 3160 VA
C - 3240 VA TOTAL= 15800 VA
44 AMPS

MOUNTING: RECESSED | PANEL 3LP1 | VOLTAGE: 208Y/120V 3PH 4W
BUS: 225A
NEMA: 1 | MAIN: 150A
STATUS: NEW | FEEDER: 225A

Description	A	B	C	L	R	M	P	A				A	P	M	R	L	A	B	C	Description
326 BENCH RCPT.	720						1	20	1	A - -	2	20	1				1000			326 FLOORBOX
326 BENCH RCPT.		720					1	20	3	- B -	4	20	1					1000		326 PROJECTOR
326 BENCH RCPT.			360				1	20	5	- - C	6	20	1						1000	326 PROJECTOR
326 BENCH RCPT.	720						1	20	7	A - -	8	20	1				360			326 RCPT.
326 BENCH RCPT.		720					1	20	9	- B -	10	20	1					720		326 RCPT.
326 BENCH RCPT.			720				1	20	11	- - C	12	20	1						720	326 RCPT.
326 BENCH RCPT.	720						1	20	13	A - -	14	20	1				720			326 RCPT.
326 BENCH RCPT.		720					1	20	15	- B -	16	20	1					1000		326 CFH
326 BENCH RCPT.			360				1	20	17	- - C	18	20	1						1000	326 CFH
326 BENCH RCPT.	720						1	20	19	A - -	20	20	1				1000			326 CFH
326 BENCH RCPT.		720					1	20	21	- B -	22	20	1					1000		326 CFH
326 BENCH RCPT.			360				1	20	23	- - C	24	20	1							SPARE
SPARE							1	20	25	A - -	26	20	1							SPARE
SPARE							1	20	27	- B -	28	20	1							SPARE
SPARE							1	20	29	- - C	30	20	1							SPARE
SPARE							1	20	31	A - -	32	20	1							SPARE
SPARE							1	20	33	- B -	34	20	1							SPARE
SPARE							1	20	35	- - C	36	20	1							SPARE
SPARE							1	20	37	A - -	38	20	1							SPARE
SPARE							1	20	39	- B -	40	20	1							SPARE
SPARE							1	20	41	- - C	42	20	1							SPARE
	2880	2880	1800														3080	3720	2720	

NOTES: PHASE SUBTOTALS:
A - 5960 VA SUBTOTAL= 17080 VA
B - 6600 VA X 0.25LCL= 4270 VA
C - 4520 VA TOTAL= 21350 VA
59 AMPS

MOUNTING: RECESSED | PANEL 2LP7 | VOLTAGE: 208Y/120V 3PH 4W
BUS: 225A
NEMA: 1 | MAIN: 150A
STATUS: NEW | FEEDER: 225A

Description	A	B	C	L	R	M	P	A				A	P	M	R	L	A	B	C	Description
216 PEDESTALS	540						1	20	1	A - -	2	20	1				720			216 FLOORBOX
216 PEDESTALS		540					1	20	3	- B -	4	20	1					1000		216 PROJECTOR
216 PEDESTALS			720				1	20	5	- - C	6	20	1						1000	216 PROJECTOR
216 PEDESTALS	720						1	20	7	A - -	8	20	1				1000			216 PEDESTAL
216 PEDESTALS		720					1	20	9	- B -	10	20	1					360		216 RCPT.
216 PEDESTALS			720				1	20	11	- - C	12	20	1						1000	216 EQUIP.
216 PEDESTALS	720						1	20	13	A - -	14	20	1				1000			216 EQUIP.
216 PEDESTALS		720					1	20	15	- B -	16	20	1					1000		216 EQUIP.
216 PEDESTALS			720				1	20	17	- - C	18	20	1						1000	216 EQUIP.
216 PEDESTALS	720						1	20	19	A - -	20	20	1				1000			216 EQUIP.
216 PEDESTALS		720					1	20	21	- B -	22	20	1					540		216 RCPT.
216 PEDESTALS			720				1	20	23	- - C	24	20	1						540	216 RCPT.
216 PEDESTALS	540						1	20	25	A - -	26	20	1				540			216 RCPT.
216 PEDESTALS		540					1	20	27	- B -	28	20	1					1000		216 EQUIP.
SPARE							1	20	29	- - C	30	20	1						1000	216 EQUIP.
SPARE							1	20	31	A - -	32	20	1							SPARE
SPARE							1	20	33	- B -	34	20	1					1000		216 CFH
SPARE							1	20	35	- - C	36	20	1							SPARE
SPARE							1	20	37	A - -	38	20	1							SPARE
SPARE							1	20	39	- B -	40	20	1							SPARE
SPARE							1	20	41	- - C	42	20	1							SPARE
	3240	3240	2880														4260	4900	4540	

NOTES: PHASE SUBTOTALS:
A - 7500 VA SUBTOTAL= 23060 VA
B - 8140 VA X 0.25LCL= 5765 VA
C - 7420 VA TOTAL= 28825 VA
80 AMPS

MOUNTING: RECESSED | PANEL 2LP3 | VOLTAGE: 208Y/120V 3PH 4W
BUS: 225A
NEMA: 1 | MAIN: 150A
STATUS: NEW | FEEDER: 225A

Description	A	B	C	L	R	M	P	A				A	P	M	R	L	A	B	C	Description
218 BENCH RCPT.	720						1	20	1	A - -	2	20	1				720			218 FLOORBOX
218 BENCH RCPT.		540					1	20	3	- B -	4	20	1					1000		218 PROJECTOR
218 BENCH RCPT.			540				1	20	5	- - C	6	20	1						1000	218 PROJECTOR
218 BENCH RCPT.	720						1	20	7	A - -	8	20	1				360			218 RCPT.
218 BENCH RCPT.		540					1	20	9	- B -	10	20	1					180		218 RCPT.
218 BENCH RCPT.			540				1	20	11	- - C	12	20	1						180	218 WW RCPT.
218 BENCH RCPT.	720						1	20	13	A - -	14	20	1				540			218 RCPT.
218 BENCH RCPT.		540					1	20	15	- B -	16	20	1					540		218 RCPT.
218 BENCH RCPT.			540				1	20	17	- - C	18	20	1						360	218 RCPT.
218 BENCH RCPT.	720						1	20	19	A - -	20	20	1				1000			218 EQUIP.
218 BENCH RCPT.		540					1	20	21	- B -	22	20	1					1000		218 EQUIP.
218 BENCH RCPT.			540				1	20	23	- - C	24	20	1							SPARE
SPARE							1	20	25	A - -	26	20	1							SPARE
SPARE							1	20	27	- B -	28	20	1							SPARE
SPARE							1	20	29	- - C	30	20	1							SPARE
SPARE							1	20	31	A - -	32	20	1							SPARE
SPARE							1	20	33	- B -	34	20	1							SPARE
SPARE							1	20	35	- - C	36	20	1							SPARE
SPARE							1	20	37	A - -	38	20	1							SPARE
SPARE							1	20	39	- B -	40	20	1							SPARE
SPARE							1	20	41	- - C	42	20	1							SPARE
	2880	2160	2160														2620	2720	1540	

NOTES: PHASE SUBTOTALS:
A - 5500 VA SUBTOTAL= 14080 VA
B - 4880 VA X 0.25LCL= 3520 VA
C - 3700 VA TOTAL= 17600 VA
49 AMPS

- PANEL SCHEDULES SHOWN ON THIS SHEET ARE TO BE USED FOR PANELBOARD MAIN CIRCUIT BREAKER RATING AND BRANCH CIRCUIT BREAKER RATING AND POSITION WITHIN THE PANELBOARD.
- PANELBOARDS SHALL BE PROVIDED AS SPECIFIED IN THE PROJECT SPECIFICATION SECTION 262416 'PANELBOARDS'.

2LP8	2LP4	1LP4	1LP1
2LP9	2LP5	2LP1	1LP2
2SB1	2LP6	2LP2	1LP3
3LP1	2LP7	2LP3	

MICHAEL WALL ENGINEERING
858-638-0600
858-638-0640 (fax)
www.mwalleng.com
4115 Sorrento Valley Blvd.
San Diego, CA 92121
REGISTERED ELECTRICAL ENGINEERS

HGA
1918 Main Street, Third Floor
Santa Monica, California 90405
Telephone 310.557.7600

STRUCTURAL ENGINEER
SAIFUL BOUQUET
155 N LAKE AVE
PASADENA, CA 91101
626-304-2616

MECHANICAL & PLUMBING ENGINEER
STANTEC CONSULTING INC
14130 RIVERSIDE DR. # 201
SHERMAN OAKS, CA 91423
818-377-8220

ELECTRICAL ENGINEER
FBA ENGINEERING
150 PAULARINO AVE. #A120
COSTA MESA, CA 92626
949-852-9995

CIVIL ENGINEER
KPFF CONSULTING ENGINEERS
700 SOUTH FLOWER ST. #2100
LOS ANGELES, CA 90017
213-418-0201

LANDSCAPE ARCHITECT
LYNN CAPOUYA, INC.
17992 MITCHELL SOUTH, #110
IRVINE, CA 92614
949-756-0150

LABORATORY CONSULTANT
RESEARCH FACILITIES DESIGN
3965 FIFTH AVE. #400
SAN DIEGO, CA 92103
619-297-0159

SCIENCE CENTER
SANTA ANA COLLEGE
RANCHO SANTIAGO COMMUNITY COLLEGE DISTRICT
1530 W. 17TH ST.
SANTA ANA, CA 92706

SANTA ANA COLLEGE

I HEREBY CERTIFY THAT THIS PLAN, SPECIFICATION OR REPORT WAS PREPARED BY ME OR UNDER MY DIRECT SUPERVISION AND THAT I AM A DULY LICENSED PROFESSIONAL ENGINEER UNDER THE LAWS OF THE STATE OF CA

NAME: JAMES G. MATSON | GUY J. CARPINO
DATE: SEPTEEMBER 30, 2017 | JUNE 30, 2019
REGISTRATION NUMBER: C13036 | E 15951

NO	DESCRIPTION	DATE
2	Addendum 2	09/01/2017

ISSUANCE HISTORY - THIS SHEET
DRAWN BY: Author | REVIEW BY: Approver
HGA NO: 3584-001-00

PANEL SCHEDULES

DATE: JULY 06, 2017

LE3.01

ADDENDA PACKAGE

©COPYRIGHT HAMMEL, GREEN AND ABRAHAMSON, INC.

W:\PROJ16\16026\DWG\LE3.01 – PANEL SCHEDULES.DWG Tuesday, August 29, 2017 10:40:50 AM – BRashidi

PANEL 3LP5

MOUNTING: RECESSED | NEMA: 1 | VOLTAGE: 208Y/120V 3PH 4W | BUS: 225A | MAIN: 150A | FEEDER: 225A | STATUS: NEW

Description	A	B	C	L	R	M	P	A			A	P	M	R	L	A	B	C	Description
313 WW RCPT.	360						1	20	1	A - -	2	20	1			1000			313 CFH
313 WW RCPT.		360					1	20	3	- B -	4	20	1				360		313 WW RCPT
313 CFH			1000				1	20	5	- - C	6	20	1					180	313 WW RCPT
313 U.C. GLSWSH	1800						2	30	7	A - -	8	20	1						SPARE
- - - - -		1800					-	-	9	- B -	10	20	1						SPARE
313 U.C. GLSWSH			1000				1	20	11	- - C	12	20	1						SPARE
313 RCPT.	360						1	20	13	A - -	14	20	1						SPARE
313 RCPT.		360					1	20	15	- B -	16	20	1						SPARE
313 RCPT.			180				1	20	17	- - C	18	20	1						SPARE
SPARE							1	20	19	A - -	20	20	1						SPARE
SPARE							1	20	21	- B -	22	20	1						SPARE
SPARE							1	20	23	- - C	24	20	1						SPARE
SPARE							1	20	25	A - -	26	20	1						SPARE
SPARE							1	20	27	- B -	28	20	1						SPARE
SPARE							1	20	29	- - C	30	20	1						SPARE
SPARE							1	20	31	A - -	32	20	1						SPARE
SPARE							1	20	33	- B -	34	20	1						SPARE
SPARE							1	20	35	- - C	36	20	1						SPARE
SPARE							1	20	37	A - -	38	20	1						SPARE
SPARE							1	20	39	- B -	40	20	1						SPARE
SPARE							1	20	41	- - C	42	20	1						SPARE
	2520	2520	2160													1000	360	180	

NOTES:

PHASE SUBTOTALS:

A -	3520 VA	SUBTOTAL=	8760 VA
B -	2880 VA	X 0.25LCL=	2190 VA
C -	2360 VA	TOTAL=	10950 VA
			30 AMPS

PANEL 3LP2

MOUNTING: RECESSED | NEMA: 1 | VOLTAGE: 208Y/120V 3PH 4W | BUS: 225A | MAIN: 150A | FEEDER: 225A | STATUS: NEW

Description	A	B	C	L	R	M	P	A			A	P	M	R	L	A	B	C	Description
322 U.C. GLSWSH	1800						2	30	1	A - -	2	20	1			540			320-1 WW RCPT.
- - - - -		1800					-	-	3	- B -	4	20	1				540		320-1 WW RCPT.
322 U.C. GLSWSH			1000				1	20	5	- - C	6	20	1					540	320-1 WW RCPT.
322 CFH	1000						1	20	7	A - -	8	20	1			540			320-1 WW RCPT.
322 CFH		1000					1	20	9	- B -	10	20	1				540		320-1 WW RCPT.
322 RCPT.			540				1	20	11	- - C	12	20	1					180	PT DISP.
322 RCPT.	540						1	20	13	A - -	14	20	1						SPARE
322 RCPT.		360					1	20	15	- B -	16	20	1						SPARE
322 RCPT.			540				1	20	17	- - C	18	20	1						SPARE
322 RCPT.	720						1	20	19	A - -	20	20	1						SPARE
SPARE							1	20	21	- B -	22	20	1						SPARE
322 ISOLD			1000				1	20	23	- - C	24	20	1						SPARE
SPARE							1	20	25	A - -	26	20	1						SPARE
SPARE							1	20	27	- B -	28	20	1						SPARE
SPARE							1	20	29	- - C	30	20	1						SPARE
SPARE							1	20	31	A - -	32	20	1						SPARE
SPARE							1	20	33	- B -	34	20	1						SPARE
SPARE							1	20	35	- - C	36	20	1						SPARE
SPARE							1	20	37	A - -	38	20	1						SPARE
SPARE							1	20	39	- B -	40	20	1						SPARE
SPARE							1	20	41	- - C	42	20	1						SPARE
	4060	3160	3080													1080	1080	690	

NOTES:

PHASE SUBTOTALS:

A -	5140 VA	SUBTOTAL=	13150 VA
B -	4240 VA	X 0.25LCL=	3288 VA
C -	3770 VA	TOTAL=	16438 VA
			46 AMPS

PANEL 3LP6

MOUNTING: RECESSED | NEMA: 1 | VOLTAGE: 208Y/120V 3PH 4W | BUS: 225A | MAIN: 150A | FEEDER: 225A | STATUS: NEW

Description	A	B	C	L	R	M	P	A			A	P	M	R	L	A	B	C	Description
309 PEDESTALS	360						1	20	1	A - -	2	20	1			1000			309 FLOORBOX
309 PEDESTALS		720					1	20	3	- B -	4	20	1				1000		309 PROJECTOR
309 PEDESTALS			720				1	20	5	- - C	6	20	1					1000	309 PROJECTOR
309 PEDESTALS	360						1	20	7	A - -	8	20	1			360			309 RCPT.
309 PEDESTALS		720					1	20	9	- B -	10	20	1				1000		309 CFH
309 PEDESTALS			720				1	20	11	- - C	12	20	1					1000	309 CFH
309 PEDESTALS	720						1	20	13	A - -	14	20	1			1000			309 CFH
309 PEDESTALS		720					1	20	15	- B -	16	20	1				1000		309 CFH
309 PEDESTALS			720				1	20	17	- - C	18	20	1					540	309 RCPT.
309 PEDESTALS	360						1	20	19	A - -	20	20	1			540			309 RCPT.
309 PEDESTALS		720					1	20	21	- B -	22	20	1				540		309 RCPT.
309 PEDESTALS			720				1	20	23	- - C	24	20	1					360	309 RCPT.
SPARE							1	20	25	A - -	26	20	1						SPARE
SPARE							1	20	27	- B -	28	20	1						SPARE
SPARE							1	20	29	- - C	30	20	1						SPARE
SPARE							1	20	31	A - -	32	20	1						SPARE
SPARE							1	20	33	- B -	34	20	1						SPARE
SPARE							1	20	35	- - C	36	20	1						SPARE
SPARE							1	20	37	A - -	38	20	1						SPARE
SPARE							1	20	39	- B -	40	20	1						SPARE
SPARE							1	20	41	- - C	42	20	1						SPARE
	1800	2880	2880													2900	3540	2900	

NOTES:

PHASE SUBTOTALS:

A -	4700 VA	SUBTOTAL=	16900 VA
B -	6420 VA	X 0.25LCL=	4225 VA
C -	5780 VA	TOTAL=	21125 VA
			59 AMPS

PANEL 3LP3

MOUNTING: RECESSED | NEMA: 1 | VOLTAGE: 208Y/120V 3PH 4W | BUS: 225A | MAIN: 150A | FEEDER: 225A | STATUS: NEW

Description	A	B	C	L	R	M	P	A			A	P	M	R	L	A	B	C	Description
320 PEDESTALS	720						1	20	1	A - -	2	20	1			1000			320 FLOORBOX
320 PEDESTALS		720					1	20	3	- B -	4	20	1				1000		320 PROJECTOR
320 PEDESTALS			720				1	20	5	- - C	6	20	1					360	320 RCPT.
320 PEDESTALS	720						1	20	7	A - -	8	20	1			1000			320 CFH
320 PEDESTALS		720					1	20	9	- B -	10	20	1				1000		320 CFH
320 PEDESTALS			720				1	20	11	- - C	12	20	1					1000	320 CFH
320 PEDESTALS	720						1	20	13	A - -	14	20	1			1000			320 CFH
320 PEDESTALS		720					1	20	15	- B -	16	20	1				1000		320 CFH
320 PEDESTALS			720				1	20	17	- - C	18	20	1					1000	320 CFH
320 CFH	1000						1	20	19	A - -	20	20	1			1000			320 CFH
320 CFH		1000					1	20	21	- B -	22	20	1				1000		320 CFH
320 CFH			1000				1	20	23	- - C	24	20	1					180	320 PEDESTAL
320 CFH	1000						1	20	25	A - -	26	20	1			360			320 RCPT.
320 CFH		1000					1	20	27	- B -	28	20	1						SPARE
SPARE							1	20	29	- - C	30	20	1						SPARE
SPARE							1	20	31	A - -	32	20	1						SPARE
SPARE							1	20	33	- B -	34	20	1						SPARE
SPARE							1	20	35	- - C	36	20	1						SPARE
SPARE							1	20	37	A - -	38	20	1						SPARE
SPARE							1	20	39	- B -	40	20	1						SPARE
SPARE							1	20	41	- - C	42	20	1						SPARE
	4160	4160	3160													4360	4000	2540	

NOTES:

PHASE SUBTOTALS:

A -	5820 VA	SUBTOTAL=	22380 VA
B -	5160 VA	X 0.25LCL=	5595 VA
C -	5700 VA	TOTAL=	27975 VA
			78 AMPS

PANEL 3LP7

MOUNTING: RECESSED | NEMA: 1 | VOLTAGE: 208Y/120V 3PH 4W | BUS: 225A | MAIN: 150A | FEEDER: 225A | STATUS: NEW

Description	A	B	C	L	R	M	P	A			A	P	M	R	L	A	B	C	Description
316 CFH	1000						1	20	1	A - -	2	20	1			1000			316 FLOORBOX
316 RCPT.		540					1	20	3	- B -	4	20	1				1000		316 PROJECTOR
316 RCPT.			360				1	20	5	- - C	6	20	1					1000	316 PROJECTOR
316 PEDESTALS	720						1	20	7	A - -	8	20	1			360			316 RCPT.
316 PEDESTALS		720					1	20	9	- B -	10	20	1				1000		316 CFH
316 PEDESTALS			360				1	20	11	- - C	12	20	1					1000	316 CFH
316 PEDESTALS	720						1	20	13	A - -	14	20	1			1000			316 CFH
316 PEDESTALS		720					1	20	15	- B -	16	20	1				1000		316 CFH
316 PEDESTALS			720				1	20	17	- - C	18	20	1					540	316 RCPT.
316 PEDESTALS	720						1	20	19	A - -	20	20	1			540			316 RCPT.
316 PEDESTALS		720					1	20	21	- B -	22	20	1				360		316 RCPT.
316 PEDESTALS			360				1	20	23	- - C	24	20	1					540	316 RCPT.
316 PEDESTALS	720						1	20	25	A - -	26	20	1			360			316 RCPT.
316 PEDESTALS		720					1	20	27	- B -	28	20	1						SPARE
316 PEDESTALS			360				1	20	29	- - C	30	20	1						SPARE
SPARE							1	20	31	A - -	32	20	1						SPARE
SPARE							1	20	33	- B -	34	20	1						SPARE
SPARE							1	20	35	- - C	36	20	1						SPARE
SPARE							1	20	37	A - -	38	20	1						SPARE
SPARE							1	20	39	- B -	40	20	1						SPARE
SPARE							1	20	41	- - C	42	20	1						SPARE
	3880	3420	2160													3260	3360	3080	

NOTES:

PHASE SUBTOTALS:

A -	7140 VA	SUBTOTAL=	19160 VA
B -	6780 VA	X 0.25LCL=	4790 VA
C -	5240 VA	TOTAL=	23950 VA
			67 AMPS

PANEL 3LP4

MOUNTING: RECESSED | NEMA: 1 | VOLTAGE: 208Y/120V 3PH 4W | BUS: 225A | MAIN: 150A | FEEDER: 225A | STATUS: NEW

Description	A	B	C	L	R	M	P	A			A	P	M	R	L	A	B	C	Description
315 BENCH RCPT.	720						1	20	1	A - -	2	20	1			1000			315 FLOORBOX
315 BENCH RCPT.		720					1	20	3	- B -	4	20	1				1000		315 PROJECTOR
315 BENCH RCPT.			360				1	20	5	- - C	6	20	1					1000	315 PROJECTOR
315 BENCH RCPT.	720						1	20	7	A - -	8	20	1			360			315 RCPT.
315 BENCH RCPT.		720					1	20	9	- B -	10	20	1				1000		315 CFH
315 BENCH RCPT.			360				1	20	11	- - C	12	20	1					1000	315 CFH
315 BENCH RCPT.	720						1	20	13	A - -	14	20	1			1000			315 CFH
315 BENCH RCPT.		720					1	20	15	- B -	16	20	1				1000		315 CFH
315 BENCH RCPT.			720				1	20	17	- - C	18	20	1					540	315 RCPT.
315 BENCH RCPT.	720						1	20	19	A - -	20	20	1			540			315 RCPT.
315 BENCH RCPT.		720					1	20	21	- B -	22	20	1				540		315 RCPT.
315 BENCH RCPT.			360				1	20	23	- - C	24	20	1					540	315 RCPT.
SPARE							1	20	25	A - -	26	20	1						SPARE
SPARE							1	20	27	- B -	28	20	1						SPARE
SPARE							1	20	29	- - C	30	20	1						SPARE
SPARE							1	20	31	A - -	32	20	1						SPARE
SPARE							1	20	33	- B -	34	20	1						SPARE
SPARE							1	20	35	- - C	36	20	1						SPARE
SPARE							1	20	37	A - -	38	20	1						SPARE
SPARE							1	20	39	- B -	40	20	1						SPARE
SPARE							1	20	41	- - C	42	20	1						SPARE
	2880	2880	1800													2900	3540	2540	

NOTES:

PHASE SUBTOTALS:

A -	5780 VA	SUBTOTAL=	16640 VA
B -	6420 VA	X 0.25LCL=	4135 VA
C -	4340 VA	TOTAL=	20675 VA
			57 AMPS

PANEL 3LP8

MOUNTING: RECESSED | NEMA: 1 | VOLTAGE: 208Y/120V 3PH 4W | BUS: 225A | MAIN: 150A | FEEDER: 225A | STATUS: NEW

Description	A	B	C	L	R	M	P	A			A	P	M	R	L	A	B	C	Description
314 RCPT.	540						1	20	1	A - -	2	20	1			1000			312 PROJECTOR
314 RCPT.		360					1	20	3	- B -	4	20	1				1000		312 PROJECTOR
314 RCPT.			360				1	20	5	- - C	6	20	1					360	312 RCPT.
312 FLOORBOX	1000						1	20	7	A - -	8	20	1			360			312 WW RCPT.
312 FLOORBOX		1000					1	20	9	- B -	10	20	1				180		312 WW RCPT.
312 FLOORBOX			1000				1	20	11	- - C	12	20	1					540	312 RCPT.
312 FLOORBOX	1000						1	20	13	A - -	14	20	1			540			312 RCPT.
312 FLOORBOX		1000					1	20	15	- B -	16	20	1				540		312 RCPT.
312 FLOORBOX			1000				1	20	17	- - C	18	20	1					540	312 WW RCPT.
312 FLOORBOX	1000						1	20	19	A - -	20	20	1			360			312 WW RCPT.
SPARE							1	20	21	- B -	22	20	1				100		PT DISP.
SPARE							1	20	23	- - C	24	20	1					1000	312 DED REC.
SPARE							1	20	25	A - -	26	20	1			1000			312 DED REC.
SPARE							1	20	27	- B -	28	20	1						SPARE
SPARE							1	20	29	- - C	30	20	1						SPARE
SPARE							1	20	31	A - -	32	20	1						SPARE
SPARE							1	20	33	- B -	34	20	1						SPARE
SPARE							1	20	35	- - C	36	20	1						SPARE
SPARE							1	20	37	A - -	38	20	1						SPARE
SPARE							1	20	39	- B -	40	20	1						SPARE
SPARE							1	20	41	- - C	42	20	1						SPARE
	3540	2360	2360													3260	1820	2440	

NOTES:

PHASE SUBTOTALS:

A -	6900 VA	SUBTOTAL=	15780 VA
B -	4100 VA	X 0.25LCL=	3945 VA
C -	4800 VA	TOTAL=	19725 VA
			55 AMPS

- PANEL SCHEDULES SHOWN ON THIS SHEET ARE TO BE USED FOR PANELBOARD MAIN CIRCUIT BREAKER RATING AND BRANCH CIRCUIT BREAKER RATING AND POSITION WITHIN THE PANELBOARD.
- PANELBOARDS SHALL BE PROVIDED AS SPECIFIED IN THE PROJECT SPECIFICATION SECTION 262416 'PANELBOARDS'.

		3LP5	3LP2
		3LP6	3LP3
		3LP7	3LP4
		3LP8	

MICHAEL WALL ENGINEERING
858-638-0600
858-638-0640 (fax)
www.mwalleng.com
4115 Sorrento Valley Blvd.
San Diego, CA 92121
REGISTERED ELECTRICAL ENGINEERS

©COPYRIGHT HAMMEL, GREEN AND ABRAHAMSON, INC.

hGA
1918 Main Street,Third Floor
Santa Monica , California 90405
Telephone 310.557.7600

STRUCTURAL ENGINEER
SAIFUL BOUQUET
155 N LAKE AVE
PASADENA, CA 91101
626-304-2616

MECHANICAL & PLUMBING ENGINEER
STANTEC CONSULTING INC
14130 RIVERSIDE DR. # 201
SHERMAN OAKS, CA 91423
818-377-8220

ELECTRICAL ENGINEER
FBA ENGINEERING
150 PAULARINO AVE. #A120
COSTA MESA, CA 92626
949-852-9995

CIVIL ENGINEER
KPFF CONSULTING ENGINEERS
700 SOUTH FLOWER ST. #2100
LOS ANGELES, CA 90017
213-418-0201

LANDSCAPE ARCHITECT
LYNN CAPOUYA, INC.
17992 MITCHELL SOUTH, #110
IRVINE, CA 92614
949-756-0150

LABORATORY CONSULTANT
RESEARCH FACILITIES DESIGN
3965 FIFTH AVE. #400
SAN DIEGO, CA 92103
619-297-0159

SCIENCE CENTER
SANTA ANA COLLEGE

RANCHO SANTIAGO COMMUNITY COLLEGE DISTRICT

1530 W. 17TH ST.
SANTA ANA, CA 92706

SANTA ANA COLLEGE

I HEREBY CERTIFY THAT THIS PLAN, SPECIFICATION OR REPORT WAS PREPARED BY ME OR UNDER MY DIRECT SUPERVISION AND THAT I AM A DULY LICENSED ARCHITECT/PROFESSIONAL ENGINEER UNDER THE LAWS OF THE STATE OF CA

NAME: JAMES G. MATSON — GUY J. CARPINO
DATE: SEPTEMBER 30, 2017 — JUNE 30, 2019
REGISTRATION NUMBER: C13036 — E 15961

NO	DESCRIPTION	DATE
2	Addendum 2	09/01/2017

ISSUANCE HISTORY - THIS SHEET

DRAWN BY: Author | REVIEW BY: Approver

HGA NO: 3584-001-00

PANEL SCHEDULES

DATE: JULY 06, 2017

LE3.02

ADDENDA PACKAGE

W:\PROJ16\16026\DWG\LE3.02 - PANEL SCHEDULES.DWG Tuesday, August 29, 2017 10:41:07 AM - BRashidi

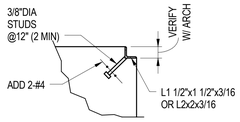

DETAIL (1)

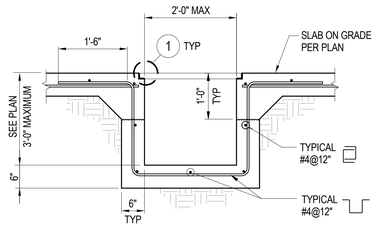

SUMP PIT (B)

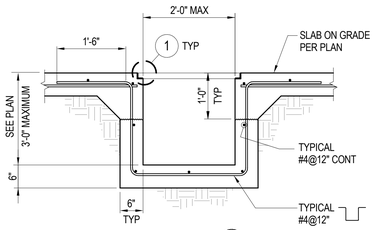

TRENCH DRAIN (A)

NOTES:
1. VERIFY ALL DIMENSIONS WITH THE ARCHITECT.
2. SEE GEOTECHNICAL REPORT FOR SUB-SURFACE PREPARATION.

8 TYPICAL TRENCH DRAIN AND SUMP PIT DETAILS
NTS CONC-DRAN-0002 (REV-1)

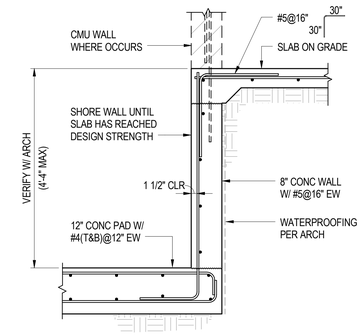

7 TYPICAL ELEVATOR PIT DETAIL
NTS CONC-ELEV-0001(REV-1)

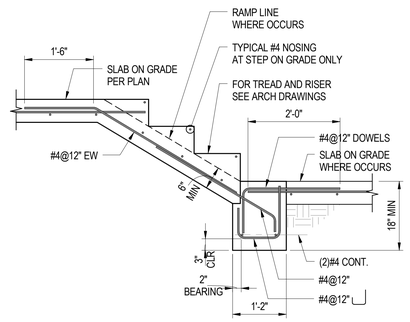

6 TYPICAL CONCRETE STEPS OR RAMP ON GRADE DETAIL
NTS CONC-SOGD-0004

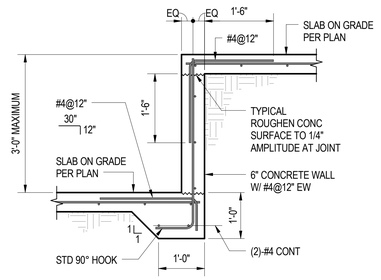

CONC-WALL-0004

4 TYPICAL 3'-0" HIGH MAXIMUM RETAINING CONCRETE WALL DETAIL
NTS

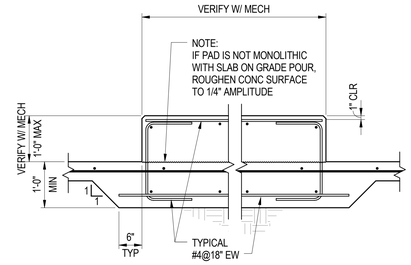

3 TYPICAL MECHANICAL PAD AT SLAB ON GRADE DETAIL
NTS CONC-SOGD-0005

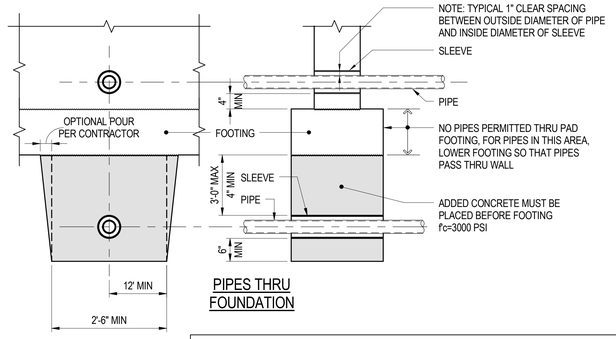

PIPES THRU FOUNDATION

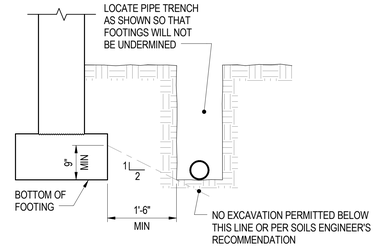

PIPE AND TRENCH ADJACENT TO FOUNDATION

NOTE:
IF DEPTH OF PIPE TRENCH FALLS BELOW 1:2 SLOPE THEN CONCRETE FOOTING MUST BE STEPPED DOWN AT CONTRACTOR EXPENSE.

2 TYPICAL PIPES THRU OR TRENCHES ADJACENT TO FOUNDATION
NTS CONC-DRAN-0001

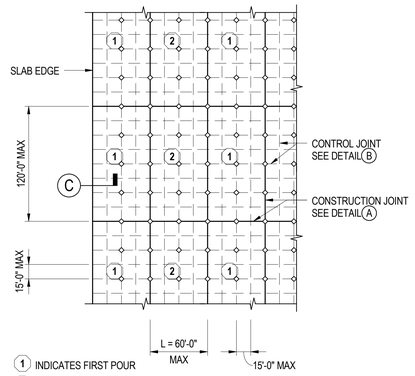

NOTES:
1. LOCATE CONSTRUCTION JOINTS ON CL OF COLUMNS AND UNDER PARTITIONS AS PRACTICAL AS POSSIBLE.
2. PROVIDE CONTROL JOINTS AT CL OF COLUMNS IF NO CONSTRUCTION JOINTS OCCUR.
3. CONTRACTOR TO SUBMIT A JOINTING PLAN TO ARCHITECT FOR REVIEW.

SLAB POUR METHOD LAYOUT (F)

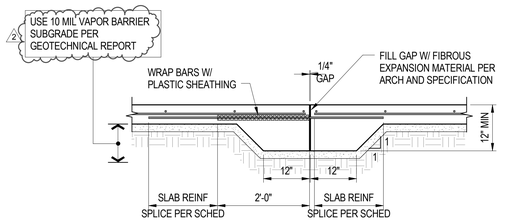

EXPANSION JOINT (E)

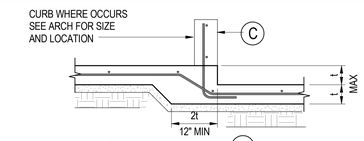

SLAB DEPRESSION (D)

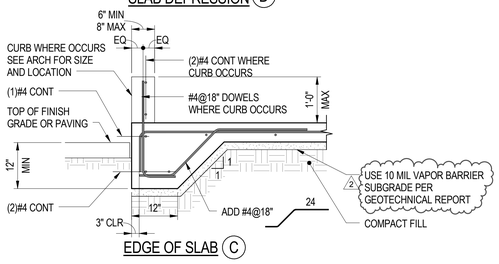

EDGE OF SLAB (C)

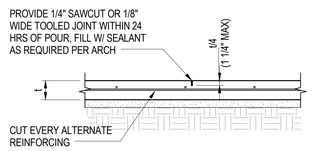

CONTROL JOINT (B)

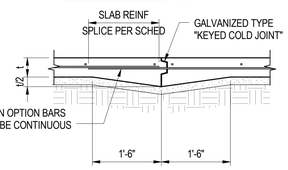

POUR / CONSTRUCTION JOINT (A)

1 TYPICAL CONCRETE SLAB ON GRADE DETAILS
NTS CONC-SOGD-0001

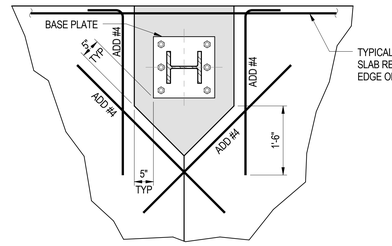

EDGE

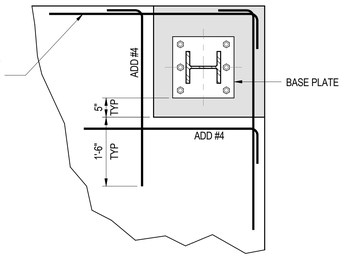

CORNER

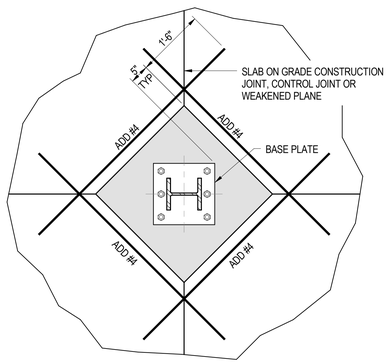

INTERIOR

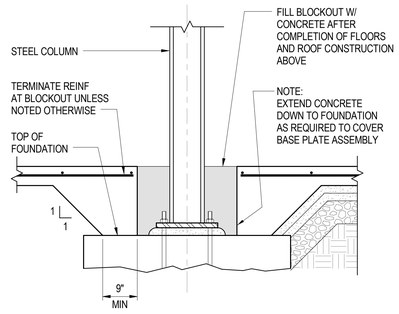

TYPICAL ELEVATION

5 TYPICAL BLOCKOUTS IN CONCRETE SLAB ON GRADE AT STEEL COLUMNS
NTS CONC-SOGD-0003

hga.
1918 Main Street, Third Floor
Santa Monica, California 90405
Telephone 310.557.7600

STRUCTURAL ENGINEER
SAIFUL BOUQUET
155 N LAKE AVE
PASADENA, CA 91101
626-304-2616

MECHANICAL & PLUMBING ENGINEER
STANTEC CONSULTING INC
14130 RIVERSIDE DR. # 201
SHERMAN OAKS, CA 91423
818-377-8220

ELECTRICAL ENGINEER
FBA ENGINEERING
150 PAULARINO AVE. #A120
COSTA MESA, CA 92626
949-852-9995

CIVIL ENGINEER
KPFF CONSULTING ENGINEERS
700 SOUTH FLOWER ST. #2100
LOS ANGELES, CA 90017
213-418-0201

LANDSCAPE ARCHITECT
LYNN CAPOUYA, INC.
17992 MITCHELL SOUTH, #110
IRVINE, CA 92614
949-756-0150

LABORATORY CONSULTANT
RESEARCH FACILITIES DESIGN
3965 FIFTH AVE. #400
SAN DIEGO, CA 92103
619-297-0159

SCIENCE CENTER
SANTA ANA COLLEGE

RANCHO SANTIAGO COMMUNITY COLLEGE DISTRICT

1530 W. 17TH ST.
SANTA ANA, CA 92706

SANTA ANA COLLEGE

I HEREBY CERTIFY THAT THIS PLAN, SPECIFICATION OR REPORT WAS PREPARED BY ME OR UNDER MY DIRECT SUPERVISION AND THAT I AM A DULY REGISTERED PROFESSIONAL ENGINEER UNDER THE LAWS OF THE STATE OF CALIFORNIA.

LICENSED ARCHITECT — YENG G. MA LOW — No. 34093 — REGISTERED PROFESSIONAL ENGINEER — STRUCTURAL — STATE OF CALIFORNIA

NAME: YENG NEONG LOW
DATE: DECEMBER 31 2018
REGISTRATION NUMBER: S4093

NO	DESCRIPTION	DATE
2	ADDENDUM 2	09/01/2017

ISSUANCE HISTORY - THIS SHEET

DRAWN BY: Author | REVIEW BY: Approver

HGA NO: 3584-001-00

TYPICAL DETAILS

DATE: JULY 06, 2017

S0.11

ADDENDA PACKAGE

© COPYRIGHT HAMMEL, GREEN AND ABRAHAMSON, INC.

Author 8/31/2017 10:45:44 AM C:\Users\Arabelt\Documents\14714_SAC-SD_S19_ArtiBelm.rvt

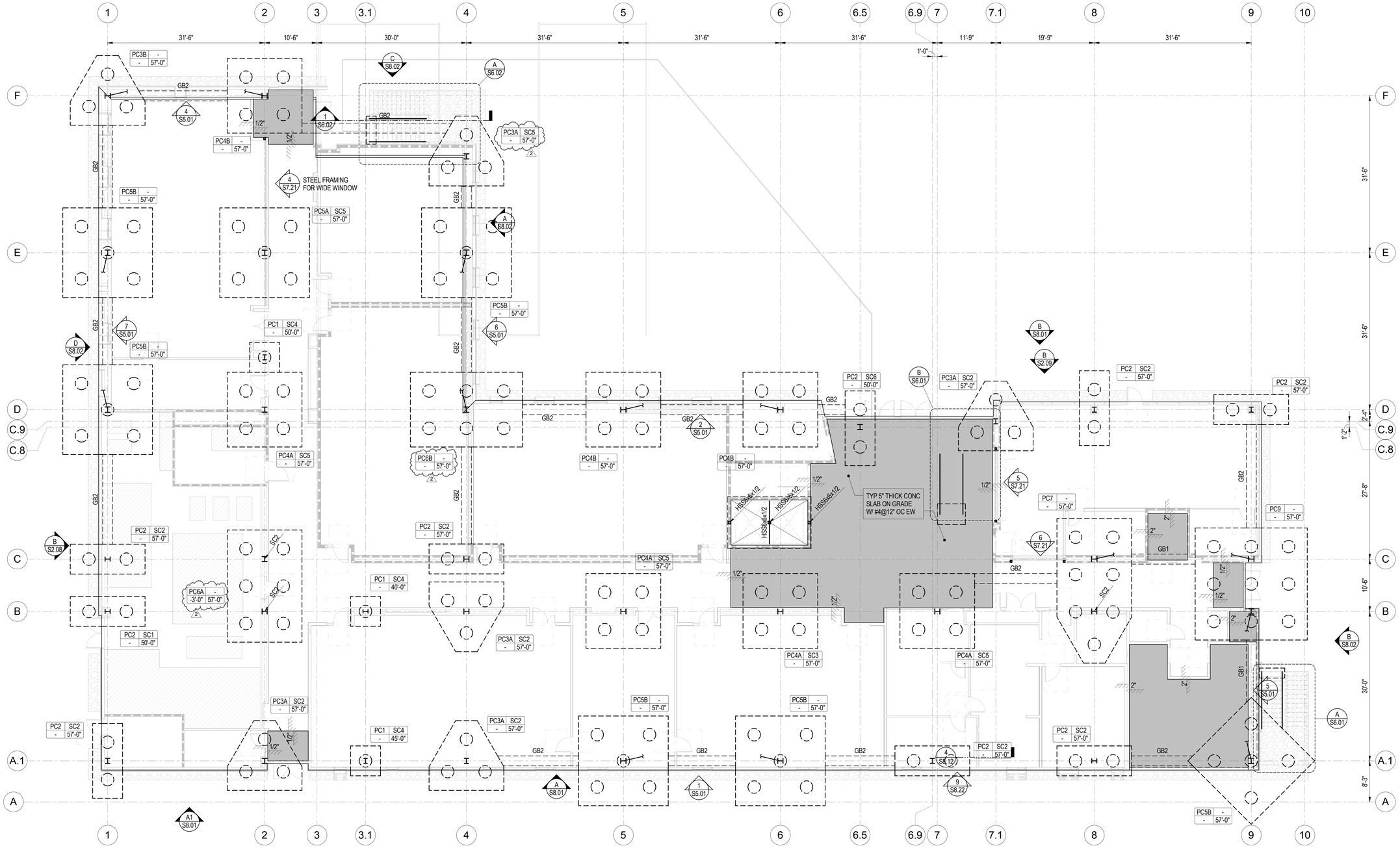

1 LEVEL 01 FOUNDATION PLAN
1/8" = 1'-0"

FOUNDATION PLAN NOTES

1. FOR GENERAL NOTES SEE **S0.0X** SERIES SHEETS. TYPICAL DETAILS OCCUR THRUOUT THESE STRUCTURAL DRAWINGS IN ADDITION TO THOSE ON **S0.XX** SERIES SHEETS.
2. VERIFY CONC SLAB ELEVATIONS INCLUDING SLAB DEPRESSIONS, SLOPES, OPNGS, CURBS, DRAINS, TRENCHES, & SLAB EDGE LOCATIONS; & WALL OVERALL DIMENSIONS INCLUDING LOCATIONS OF OPNGS WITH ARCHITECTURAL DWGS.
3. SEE ARCHITECTURAL DWGS FOR REMAINDER OF DIMENSIONS & ELEVATIONS NOT SHOWN ON STRUCT DWGS. VERIFY ALL DIMENSIONS & ELEVATIONS W/ ARCHITECTURAL DWGS PRIOR TO START OF WORK.
4. PERFORM EXCAVATION WORK IN COMPLIANCE WITH CAL/OHSA REGULATIONS.
5. FOUNDATION EXCAVATIONS MUST BE OBSERVED AND APPROVED BY PROJECT GEOTECHNICAL CONSULTANT PRIOR TO PLACING REINFORCING STEEL.
6. LOCATE NEW SUBGRADE UTILITIES AS INDICATED ON STRUCT AND MEP DRAWINGS. IDENTIFY LOCATIONS AND INVERT ELEVATIONS OF AFFECTED EXISTING UTILITIES PRIOR TO START OF WORK. NOTIFY ARCHITECT AND SEOR IF LOCATIONS ARE OTHER THAN AS NOTED, OR REQUIRE ADDITIONAL DEMO, CONSTRUCTION, OR EXCAVATION BELOW NOTED LIMIT LINES. DO NOT PENETRATE EXISTING STRUCTURE OR EXCAVATE BELOW EXISTING OR NEW FOUNDATIONS WITHOUT APPROVAL OF SEOR.
7. CENTER COLUMNS ON GRIDLINES UNO.
8. TOP OF GRADE BEAM & CONTINUOUS FOOTING ELEVATIONS TO MATCH TOP OF PILE CAP OR SPREAD FOOTING ELEVATION EA END, UNLESS NOTED OTHERWISE, THUS -X'-X"
9. TYPICAL CONC SLAB ON GRADE SHALL BE AS FOLLOWS UNLESS NOTED OTHERWISE:
   5" THICK CONC SLAB W/ #4@12" EA WAY AT CENTER OF SLAB
   2 PROVIDE 10 MIL VAPOR BARRIER
   SUBGRADE REQUIREMENTS PER SOILS REPORT
10. PROVIDE CONSTRUCTION JOINTS AND CONTROL JOINTS IN CONC SLAB ON GRADE PER **1 / S0.11** AND AS REQD PER ARCHITECTURAL DWGS.
11. PROVIDE STRUCTURAL STEEL FRAMING (INCLUDING DIVIDER BE**/11/**S**0.40**,)PPORT ELEVATOR GUIDERAILS AND ELEVATOR COUNTERWEIGHTS PER

FOUNDATION PLAN SYMBOLS

PLAN SYMBOL	DESCRIPTION	DETAIL/ SCHED
PC -1'-6" / SC 50'-0"	INDICATES PILECAP TYPE MARK, SEE SCHEDULE **1 / S3.02** INDICATES COLUMN TYPE MARK, SEE SCHEDULE **1 / S4.01** INDICATES LENGTH OF PILE FROM BOTTOM OF PILE CAP INDICATES TOP OF FOOTING ELEVATION RELATIVE TO THE LOWEST ADJACENT TOP OF CONCRETE SLAB OR FINISHED GRADE ELEVATION (-1'-6" MIN UNO), VERIFY W/ ARCH.	
GB	INDICATES GRADE BEAM MARK	3 / S3.01
S1 / S2	INDICATES STEPPED FOOTING / GRADE BM	2 / S3.01
	INDICATES CONCRETE PAD	3 / S0.11
X	INDICATES SLAB DEPRESSION VERIFY W/ ARCH	

1918 Main Street, Third Floor
Santa Monica, California 90405
Telephone 310.557.7600

STRUCTURAL ENGINEER
SAIFUL BOUQUET
155 N LAKE AVE
PASADENA, CA 91101
626-304-2616

MECHANICAL & PLUMBING ENGINEER
STANTEC CONSULTING INC
14130 RIVERSIDE DR. # 201
SHERMAN OAKS, CA 91423
818-377-8220

ELECTRICAL ENGINEER
FBA ENGINEERING
150 PAULARINO AVE. #A120
COSTA MESA, CA 92626
949-852-9995

CIVIL ENGINEER
KPFF CONSULTING ENGINEERS
700 SOUTH FLOWER ST. #2100
LOS ANGELES, CA 90017
213-418-0201

LANDSCAPE ARCHITECT
LYNN CAPOUYA, INC.
17992 MITCHELL SOUTH, #110
IRVINE, CA 92614
949-756-0150

LABORATORY CONSULTANT
RESEARCH FACILITIES DESIGN
3965 FIFTH AVE. #400
SAN DIEGO, CA 92103
619-297-0159

SCIENCE CENTER
SANTA ANA COLLEGE

RANCHO SANTIAGO COMMUNITY COLLEGE DISTRICT

1530 W. 17TH ST.
SANTA ANA, CA 92706

SANTA ANA COLLEGE

I HEREBY CERTIFY THAT THIS PLAN, SPECIFICATION OR REPORT WAS PREPARED BY ME OR UNDER MY DIRECT SUPERVISION AND THAT I AM A DULY LICENSED PROFESSIONAL ENGINEER UNDER THE LAWS OF THE STATE OF CALIFORNIA.

REGISTERED PROFESSIONAL ENGINEER JAMES S. WANG No. S4093 Exp. 12/31/18 STRUCTURAL STATE OF CALIFORNIA

NAME: YENG KEONG LOW
DATE: DECEMBER 31 2018
REGISTRATION NUMBER: S4093

NO	DESCRIPTION	DATE
2	ADDENDUM 2	09/01/2017

ISSUANCE HISTORY - THIS SHEET

DRAWN BY: Author | REVIEW BY: Approver

HGA NO: 3584-001-00

FIRST LEVEL FOUNDATION PLAN

DATE: JULY 06, 2017

S2.01

ADDENDA PACKAGE

© COPYRIGHT HAMMEL, GREEN AND ABRAHAMSON, INC.

C:\Users\Author\Documents\14714_S4C-SO_S16_Admin.rvt
8/31/2017 10:45:51 AM
Author

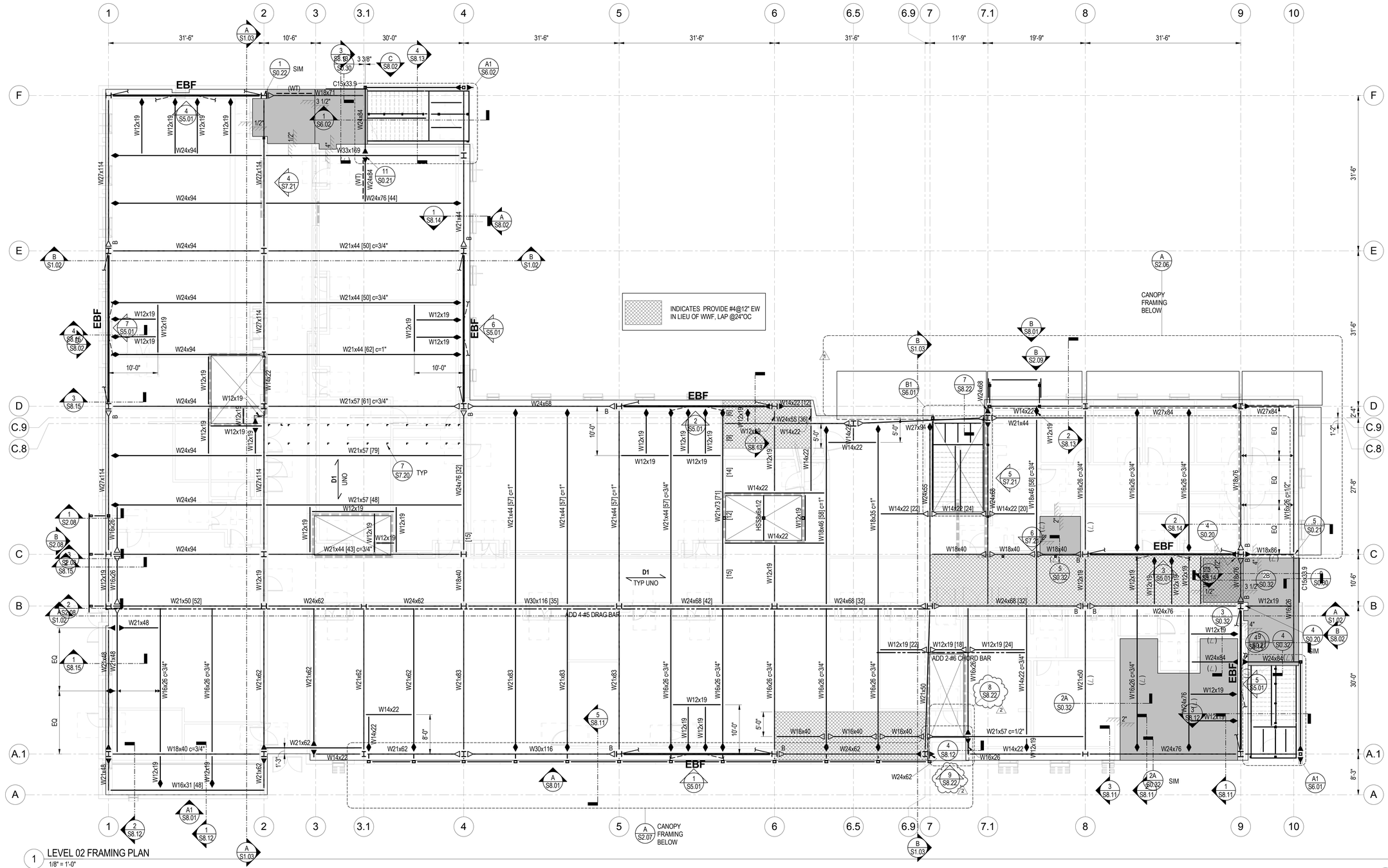

1 LEVEL 02 FRAMING PLAN
1/8" = 1'-0"

FLOOR/ ROOF FRAMING PLAN NOTES

1. FOR GENERAL NOTES AND TYPICAL DETAILS SEE S0.00X SERIES SHEETS.
2. VERIFY ALL DIMENSIONS PRIOR TO START OF WORK. SEE ARCHITECTURAL DRAWINGS FOR REMAINDER OF DIMENSIONS NOT SHOWN ON THIS PLAN.
3. SEE ARCHITECTURAL DRAWINGS FOR CONCRETE SLAB ELEVATIONS, DEPRESSIONS, SLOPES, OPENINGS, CURBS, DRAINS, TRENCHES, SLAB EDGE LOCATIONS, ETC., AND FOR WALL OVERALL DIMENSIONS, LOCATIONS OF OPENINGS, ETC., NOT INDICATED ON STRUCTURAL DRAWINGS.
4. ALL COLUMNS SHALL BE CENTERED ON GRIDLINES UNLESS NOTED OTHERWISE.
5. BEAMS ARE SPACED EQUALLY BETWEEN COLUMNS AND GIRDERS UNO.
6. TOP OF STRUCTURAL STEEL ELEVATION (TOS) SHALL BE FROM TOP OF SLAB DATUM ELEVATION MINUS TOTAL SLAB THICKNESS ("t") PER "TYPICAL METAL DECK CONSTRUCTION SCHEDULE", UNLESS NOTED OTHERWISE. SEE ARCHITECTURAL DRAWINGS A204 FOR THE TOP OF STRUCTURAL SLAB ELEVATION.
7. THE LENGTH AND WIDTH OF THE FLOOR, ROOF, AND WALL PENETRATIONS SHALL BE 6 INCHES LARGER THAN THE MECHANICAL DUCTS.
8. EBF AND DRAG BEAMS ARE PART OF SLRS.
9. UNLESS NOTED OTHERWISE PROVIDE 3/4" DIA HEADED SHEAR STUDS ICC-ESR-2856 @12" (MAX SPACING) FOR ALL BEAMS AND GIRDERS THAT SUPPORT STRUCTURAL CONCRETE.

FLOOR / ROOF FRAMING PLAN SYMBOLS

PLAN SYMBOL	DESCRIPTION	DETAIL REFERENCE
EBF	INDICATES ECCENTRIC BRACE FRAME, SEE ELEVATION AND TYPICAL DETAILS ON S5.XX SERIES SHEETS	
	INDICATES BEAM TO COLUMN MOMENT CONNECTION, FOR NON-FRAME CONNECTIONS.	3 S0.20
	INDICATES BEAM TO BEAM MOMENT CONNECTION.	2 S0.21 & 8 S0.21
	INDICATES BEAM STIFFENER CONNECTION.	1E S0.20
	INDICATES DRAG BEAM CONNECTION.	4 S0.20
D	INDICATES DIRECTION OF METAL DECKING AND SLAB CONSTRUCTION.	3 S0.30

PLAN SYMBOL	DESCRIPTION	DETAIL REFERENCE
LOW HIGH	INDICATES DIAGONAL ANGLE BRACE.	1 S0.21
	INDICATES BEAM BROKEN-BACK CONNECTION	4 S0.21
[XX]	INDICATES STUDS ON BEAM	1 S0.30
(∠)	INDICATES LEDGER ANGLE ON BEAM	7 S0.30
(WT)	INDICATES STRUCTURAL TEE ON BEAM.	6 S0.30
	INDICATES MECHANICAL PAD	8 S0.30 OR 1 S0.32
X	INDICATES SLAB DEPRESSION, VERIFY W/ ARCH	

1918 Main Street, Third Floor
Santa Monica, California 90405
Telephone 310.557.7600

STRUCTURAL ENGINEER
SAIFUL BOUQUET
155 N LAKE AVE
PASADENA, CA 91101
626-304-2616

MECHANICAL & PLUMBING ENGINEER
STANTEC CONSULTING INC
14130 RIVERSIDE DR. # 201
SHERMAN OAKS, CA 91423
818-377-8220

ELECTRICAL ENGINEER
FBA ENGINEERING
150 PAULARINO AVE. #A120
COSTA MESA, CA 92626
949-852-9995

CIVIL ENGINEER
KPFF CONSULTING ENGINEERS
700 SOUTH FLOWER ST. #2100
LOS ANGELES, CA 90017
213-418-0201

LANDSCAPE ARCHITECT
LYNN CAPOUYA, INC.
17992 MITCHELL SOUTH, #110
IRVINE, CA 92614
949-756-0150

LABORATORY CONSULTANT
RESEARCH FACILITIES DESIGN
3965 FIFTH AVE. #400
SAN DIEGO, CA 92103
619-297-0159

SCIENCE CENTER
SANTA ANA COLLEGE
RANCHO SANTIAGO COMMUNITY COLLEGE DISTRICT
1530 W. 17TH ST.
SANTA ANA, CA 92706

SANTA ANA COLLEGE

I HEREBY CERTIFY THAT THIS PLAN, SPECIFICATION OR REPORT WAS PREPARED BY ME, OR UNDER MY DIRECT SUPERVISION AND THAT I AM A DULY REGISTERED PROFESSIONAL ENGINEER UNDER THE LAWS OF THE STATE OF CALIFORNIA.
REGISTERED PROFESSIONAL ENGINEER YENG KEONG LOW No. S4093 Exp. 12/31/18 STRUCTURAL STATE OF CALIFORNIA
NAME: YENG KEONG LOW
DATE: DECEMBER 31 2018
REGISTRATION NUMBER: S4093

NO	DESCRIPTION	DATE
1	ADDENDUM 1	08/22/2017
2	ADDENDUM 2	09/01/2017

ISSUANCE HISTORY - THIS SHEET
DRAWN BY: Author REVIEW BY: Approver

HGA NO: 3584-001-00

SECOND LEVEL FRAMING PLAN

DATE: JULY 06, 2017

S2.02

ADDENDA PACKAGE

© COPYRIGHT HAMMEL, GREEN AND ABRAHAMSON, INC.

Author 8/31/2017 10:45:52 AM C:\Users\Arodal\Documents\14714_SAC-SC_S16_Arodal.rvt

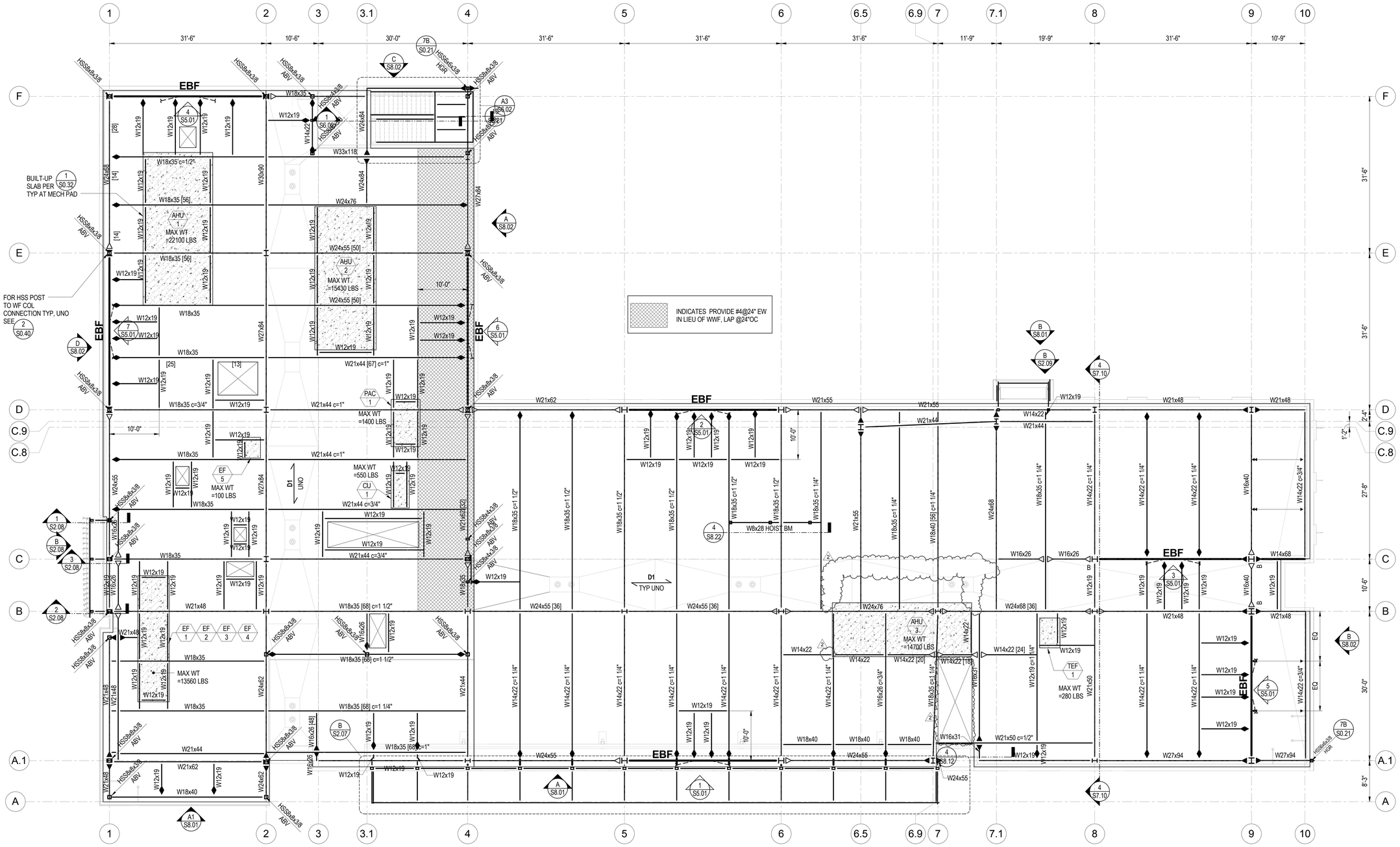

1 ROOF LEVEL FRAMING PLAN
1/8" = 1'-0"

FLOOR/ ROOF FRAMING PLAN NOTES

1. FOR GENERAL NOTES AND TYPICAL DETAILS SEE S0.00X SERIES SHEETS.
2. VERIFY ALL DIMENSIONS PRIOR TO START OF WORK. SEE ARCHITECTURAL DRAWINGS FOR REMAINDER OF DIMENSIONS NOT SHOWN ON THIS PLAN.
3. SEE ARCHITECTURAL DRAWINGS FOR CONCRETE SLAB ELEVATIONS, DEPRESSIONS, SLOPES, OPENINGS, CURBS, DRAINS, TRENCHES, SLAB EDGE LOCATIONS, ETC., AND FOR WALL OVERALL DIMENSIONS, LOCATIONS OF OPENINGS, ETC., NOT INDICATED ON STRUCTURAL DRAWINGS.
4. ALL COLUMNS SHALL BE CENTERED ON GRIDLINES UNLESS NOTED OTHERWISE.
5. BEAMS ARE SPACED EQUALLY BETWEEN COLUMNS AND GIRDERS UNO.
6. TOP OF STRUCTURAL STEEL ELEVATION (TOS) SHALL BE FROM TOP OF SLAB DATUM ELEVATION MINUS TOTAL SLAB THICKNESS ("t") PER "TYPICAL METAL DECK CONSTRUCTION SCHEDULE", UNLESS NOTED OTHERWISE. SEE ARCHITECTURAL DRAWINGS A204 FOR THE TOP OF STRUCTURAL SLAB ELEVATION.
7. THE LENGTH AND WIDTH OF THE FLOOR, ROOF, AND WALL PENETRATIONS SHALL BE 6 INCHES LARGER THAN THE MECHANICAL DUCTS.
8. EBF AND DRAG BEAMS ARE PART OF SLRS.
9. UNLESS NOTED OTHERWISE PROVIDE 3/4" DIA HEADED SHEAR STUDS ICC-ESR-2856 @12" (MAX SPACING) FOR ALL BEAMS AND GIRDERS THAT SUPPORT STRUCTURAL CONCRETE.

FLOOR / ROOF FRAMING PLAN SYMBOLS

PLAN SYMBOL	DESCRIPTION	DETAIL REFERENCE
EBF	INDICATES ECCENTRIC BRACE FRAME, SEE ELEVATION AND TYPICAL DETAILS ON S5.XX SERIES SHEETS	
	INDICATES BEAM TO COLUMN MOMENT CONNECTION, FOR NON-FRAME CONNECTIONS.	3 / S0.20
	INDICATES BEAM TO BEAM MOMENT CONNECTION.	2 / S0.21 & 8 / S0.21
	INDICATES BEAM STIFFENER CONNECTION.	1E / S0.20
	INDICATES DRAG BEAM CONNECTION.	4 / S0.20
D	INDICATES DIRECTION OF METAL DECKING AND SLAB CONSTRUCTION.	3 / S0.30

PLAN SYMBOL	DESCRIPTION	DETAIL REFERENCE
LOW HIGH	INDICATES DIAGONAL ANGLE BRACE.	1 / S0.21
	INDICATES BEAM BROKEN-BACK CONNECTION	4 / S0.21
[XX]	INDICATES STUDS ON BEAM	1 / S0.30
(L)	INDICATES LEDGER ANGLE ON BEAM	7 / S0.30
(WT)	INDICATES STRUCTURAL TEE ON BEAM.	6 / S0.30
	INDICATES MECHANICAL PAD	8 / S0.30 OR 1 / S0.32
X	INDICATES SLAB DEPRESSION, VERIFY W/ ARCH	

1918 Main Street, Third Floor
Santa Monica, California 90405
Telephone 310.557.7600

STRUCTURAL ENGINEER
SAIFUL BOUQUET
155 N LAKE AVE
PASADENA, CA 91101
626-304-2616

MECHANICAL & PLUMBING ENGINEER
STANTEC CONSULTING INC
14130 RIVERSIDE DR. # 201
SHERMAN OAKS, CA 91423
818-377-8220

ELECTRICAL ENGINEER
FBA ENGINEERING
150 PAULARINO AVE. #A120
COSTA MESA, CA 92626
949-852-9995

CIVIL ENGINEER
KPFF CONSULTING ENGINEERS
700 SOUTH FLOWER ST. #2100
LOS ANGELES, CA 90017
213-418-0201

LANDSCAPE ARCHITECT
LYNN CAPOUYA, INC.
17992 MITCHELL SOUTH, #110
IRVINE, CA 92614
949-756-0150

LABORATORY CONSULTANT
RESEARCH FACILITIES DESIGN
3965 FIFTH AVE. #400
SAN DIEGO, CA 92103
619-297-0159

SCIENCE CENTER
SANTA ANA COLLEGE
RANCHO SANTIAGO COMMUNITY COLLEGE DISTRICT
1530 W. 17TH ST.
SANTA ANA, CA 92706

SANTA ANA COLLEGE

I HEREBY CERTIFY THAT THIS PLAN, SPECIFICATION OR REPORT WAS PREPARED BY ME OR UNDER MY DIRECT SUPERVISION AND THAT I AM A DULY LICENSED PROFESSIONAL ENGINEER UNDER THE LAWS OF THE STATE OF CALIFORNIA.

REGISTERED PROFESSIONAL ENGINEER — YENG S. MA LOW — No. 54093 — Exp. 12/31/18 — STRUCTURAL — STATE OF CALIFORNIA

NAME: YENG KEONG LOW
DATE: DECEMBER 31 2018
REGISTRATION NUMBER: 54093

NO	DESCRIPTION	DATE
2	ADDENDUM 2	09/01/2017

ISSUANCE HISTORY - THIS SHEET

DRAWN BY: Author | REVIEW BY: Approver

HGA NO: 3584-001-00

ROOF PLAN FRAMING PLAN

DATE: JULY 06, 2017

S2.04

ADDENDA PACKAGE

© COPYRIGHT HAMMEL, GREEN AND ABRAHAMSON, INC.

Author 8/31/2017 10:45:57 AM C:\Users\Anbolt\Documents\14714_SAC-SC_S1X_Anbolt.rvt

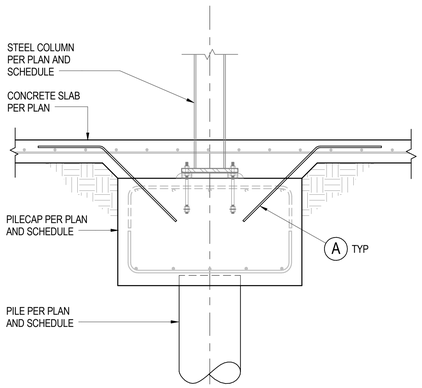

DETAIL AT CONCRETE COLUMN LOCATION (B)

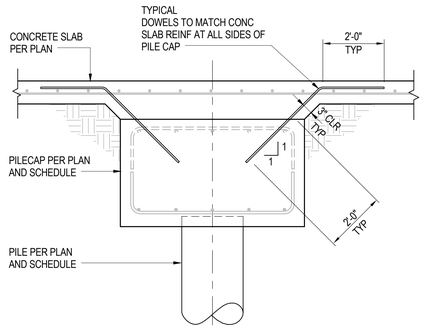

TYPICAL CONDITION (A)

3 TYPICAL STRUCTURAL SLAB ON GRADE TO PILE CAP CONNECTION DETAILS

NTS

PILE ALLOWABLE CAPACITY TABLE		
PILE DEPTH (FT)	DOWNWARD CAPACITY (KIPS)	UPWARD CAPACITY (KIPS)
50	112	-
57	136	82
NOTE: DOWNWARD AND UPWARD CAPACITIES CAN BE INCREASED BY 33% FOR SEISMIC AND WIND LOADING.		

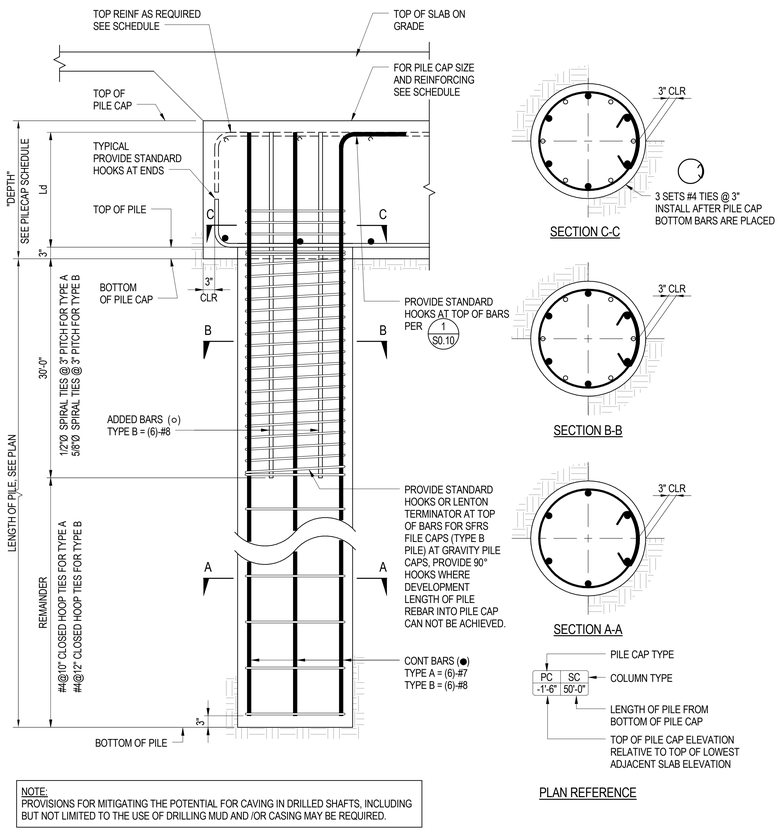

NOTE:
PROVISIONS FOR MITIGATING THE POTENTIAL FOR CAVING IN DRILLED SHAFTS, INCLUDING BUT NOT LIMITED TO THE USE OF DRILLING MUD AND /OR CASING MAY BE REQUIRED.

2 TYPICAL 30" DIAMETER PILE AMD PILE CAP ELEVATION AND SECTIONS

NTS

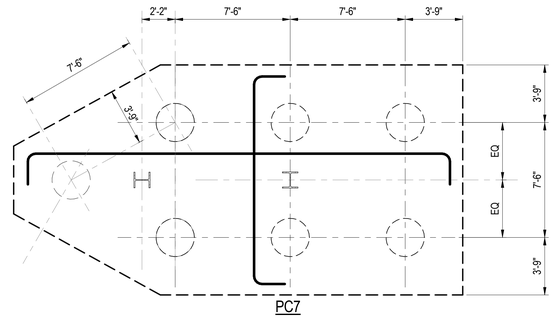

PC7

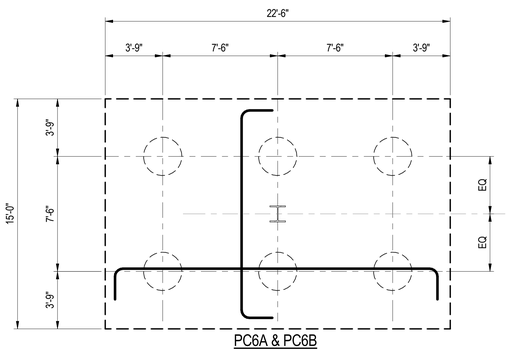

PC6A & PC6B

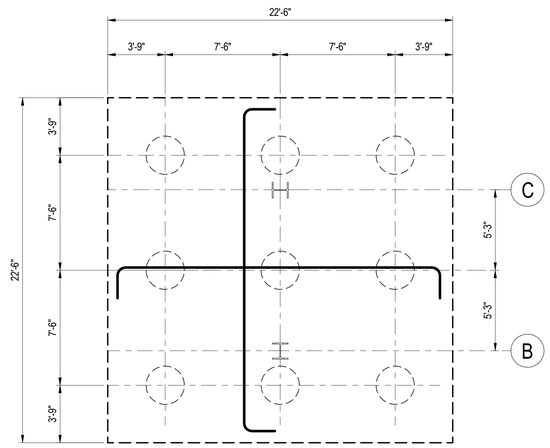

PC9

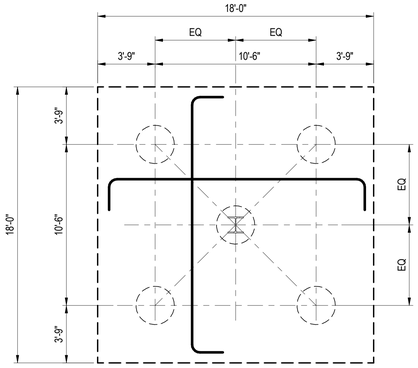

PC5A & PC5B

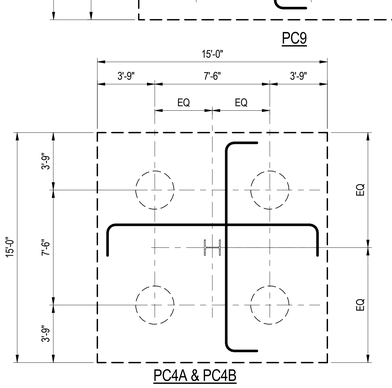

PC4A & PC4B

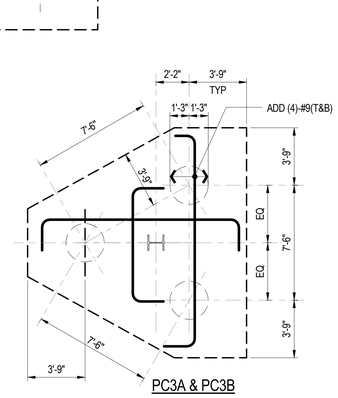

PC3A & PC3B

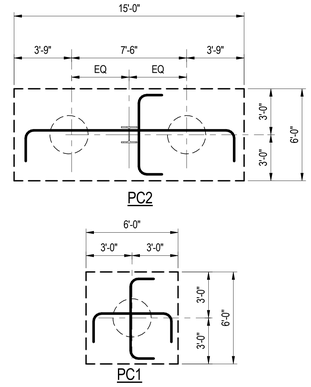

PC2

PC1

PILE CAP SCHEDULE

MARK	PILE SIZE	NUMBER OF PILES	PILE TYPE	DEPTH (IN)	REINFORCING		REMARKS
					LONGITUDINAL	TRANSVERSE	
PC1	6'-0"x6'-0"	1	A	36	#6@12"(T&B)	#6@12"(T&B)	FOR PILE AND PILE CAP ELEVATION AND SECTION SEE 2 S3.02
PC2	15'-0"x6'-0"	2	A	36	#6@12"(T) #10@12"(B)	#6@12"(T&B)	
PC3A	-	3	A	36	#6@12"(T) #9@12"(B)	#6@12"(T) #9@12"(B)	
PC3B	-	3	B	54	#6@12"(T) #9@12"(B)	#6@12"(T) #9@12"(B)	
PC4A	15'-0"x15'-0"	4	A	36	#6@12"(T) #9@12"(B)	#6@12"(T) #9@12"(B)	
PC4B	15'-0"x15'-0"	4	B	54	#6@12"(T) #9@12"(B)	#6@12"(T) #9@12"(B)	
PC5A	18'-0"x18'-0"	5	A	36	#6@12"(T) #9@12"(B)	#6@12"(T) #9@12"(B)	
PC5B	18'-0"x18'-0"	5	B	54	#6@12"(T) #10@12"(B)	#6@12"(T) #10@12"(B)	
PC6B 2	15'-0"x22'-6"	6	B	60	#6@12"(T) #11@12"(B)	#6@12"(T) #11@12"(B)	
PC6A	15'-0"x22'-6"	6	A	48	#6@12"(T) #9@12"(B)	#6@12"(T) #9@12"(B)	
PC7	-	7	B	60	#11@12"(T&B)	#11@12"(T&B)	
PC9	22'-6"x22'-6"	9	B	60	#11@12"(T&B)	#11@12"(T&B)	

1 TYPICAL PILE CAP DETAILS

NTS

HGA
1918 Main Street, Third Floor
Santa Monica, California 90405
Telephone 310.557.7600

STRUCTURAL ENGINEER
SAIFUL BOUQUET
155 N LAKE AVE
PASADENA, CA 91101
626-304-2616

MECHANICAL & PLUMBING ENGINEER
STANTEC CONSULTING INC
14130 RIVERSIDE DR. # 201
SHERMAN OAKS, CA 91423
818-377-8220

ELECTRICAL ENGINEER
FBA ENGINEERING
150 PAULARINO AVE. #A120
COSTA MESA, CA 92626
949-852-9995

CIVIL ENGINEER
KPFF CONSULTING ENGINEERS
700 SOUTH FLOWER ST. #2100
LOS ANGELES, CA 90017
213-418-0201

LANDSCAPE ARCHITECT
LYNN CAPOUYA, INC.
17992 MITCHELL SOUTH, #110
IRVINE, CA 92614
949-756-0150

LABORATORY CONSULTANT
RESEARCH FACILITIES DESIGN
3965 FIFTH AVE. #400
SAN DIEGO, CA 92103
619-297-0159

SCIENCE CENTER
SANTA ANA COLLEGE

RANCHO SANTIAGO COMMUNITY COLLEGE DISTRICT

1530 W. 17TH ST.
SANTA ANA, CA 92706

SANTA ANA COLLEGE

I HEREBY CERTIFY THAT THIS PLAN, SPECIFICATION OR REPORT WAS PREPARED BY ME, OR UNDER MY DIRECT SUPERVISION AND THAT I AM A DULY LICENSED PROFESSIONAL ENGINEER UNDER THE LAWS OF THE STATE OF CALIFORNIA.

LICENSED ARCHITECT YING S. MA No. C-30811 EXPIRES 31 AUGUST 2017 STATE OF CALIFORNIA

REGISTERED PROFESSIONAL ENGINEER YING KEONG LOW No. S4093 Exp. 12/31/18 STRUCTURAL STATE OF CALIFORNIA

NAME: YING KEONG LOW
DATE: DECEMBER 31 2018
REGISTRATION NUMBER: S4093

NO	DESCRIPTION	DATE
2	ADDENDUM 2	09/01/2017

ISSUANCE HISTORY - THIS SHEET

DRAWN BY: Author | REVIEW BY: Approver

HGA NO: 3584-001-00

FOUNDATION SCHEDULE AND TYPICAL DETAILS

DATE: JULY 06, 2017

S3.02 ADDENDA PACKAGE

© COPYRIGHT HAMMEL, GREEN AND ABRAHAMSON, INC.

Author 8/31/2017 10:46:01 AM C:\Users\Anbell\Documents\1471A_SAC-SC_S16_Anbell.rvt

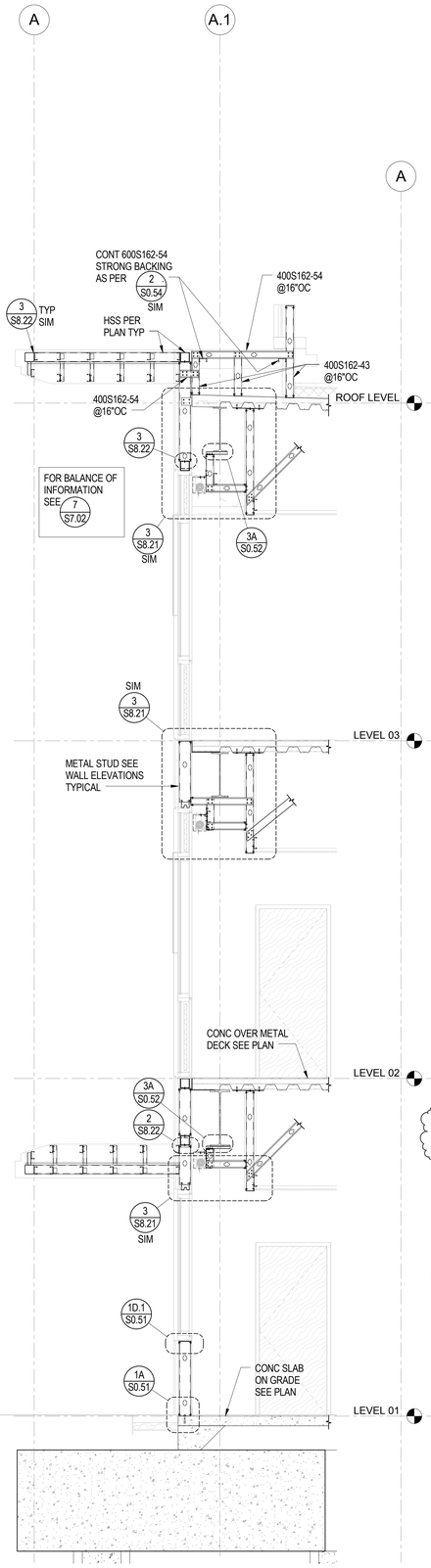

5 WALL SECTION
3/8" = 1'-0"

NOTE:
SEE ARCH WALL
SECTION 2/A424

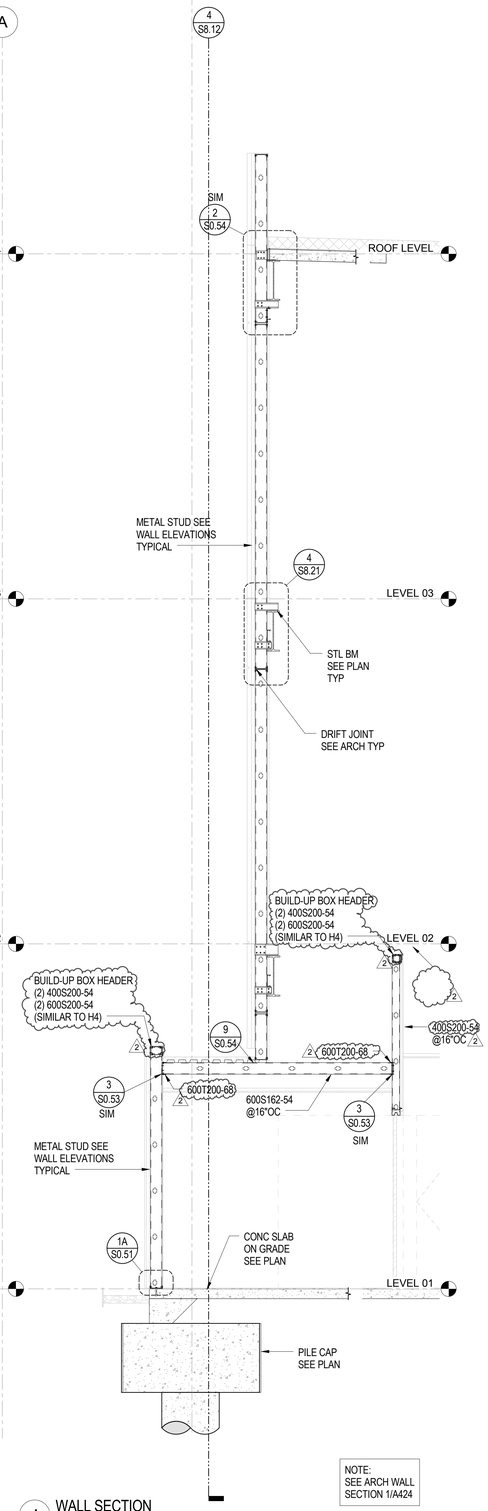

4 WALL SECTION
3/8" = 1'-0"

NOTE:
SEE ARCH WALL
SECTION 1/A424

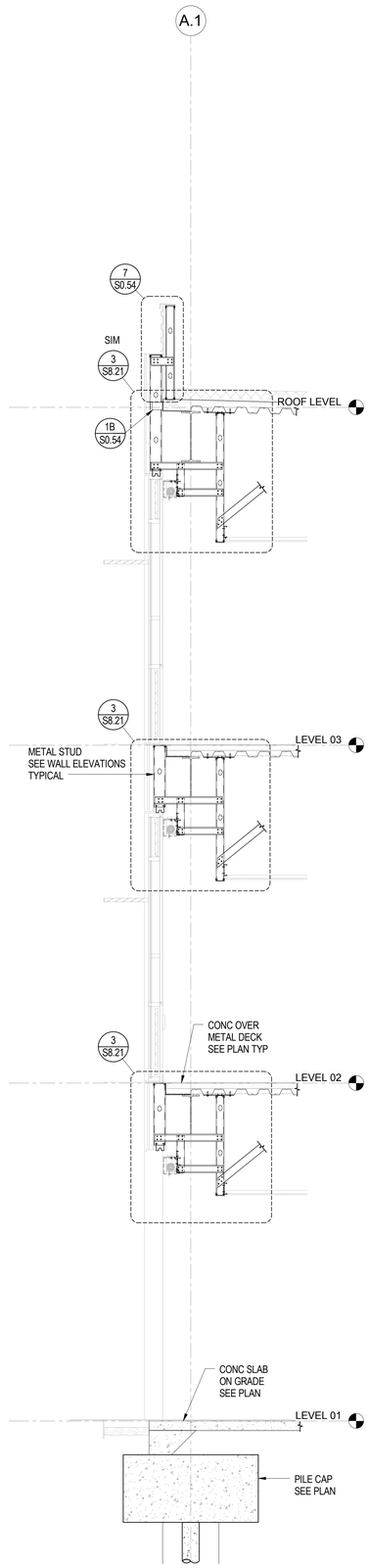

3 WALL SECTION
3/8" = 1'-0"

NOTE:
SEE ARCH WALL
SECTION 3/A427

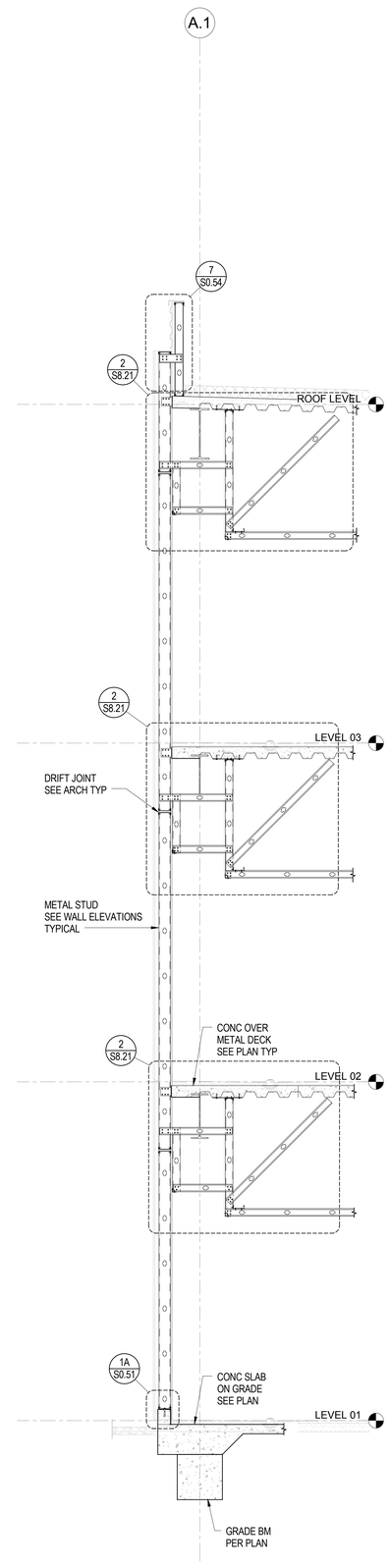

2 WALL SECTION
3/8" = 1'-0"

NOTE:
SEE ARCH WALL
SECTION 2/A423

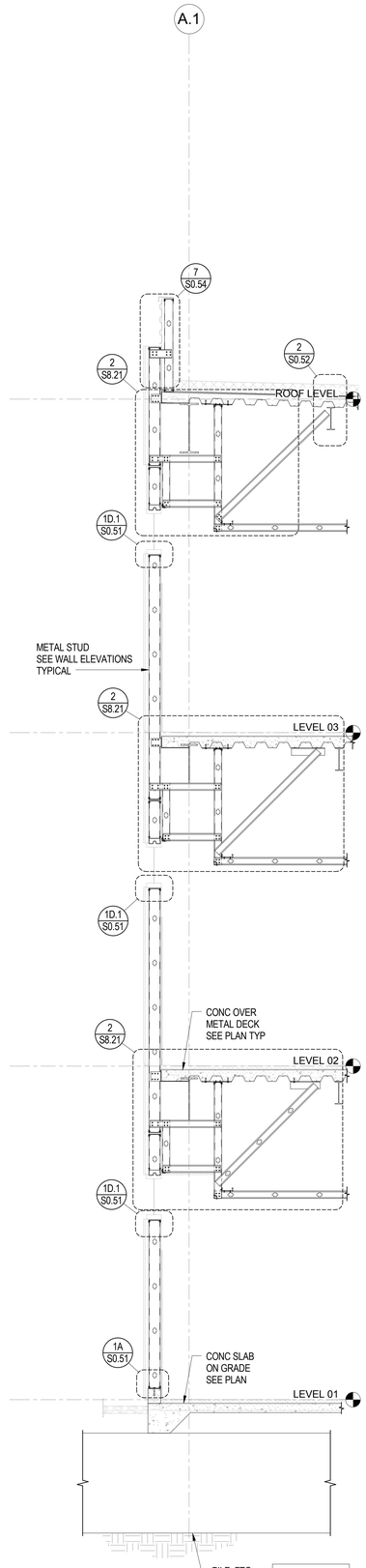

1 WALL SECTION
3/8" = 1'-0"

NOTE:
SEE ARCH WALL
SECTION 1/A427

1918 Main Street, Third Floor
Santa Monica , California 90405
Telephone 310.557.7600

STRUCTURAL ENGINEER
SAIFUL BOUQUET
155 N LAKE AVE
PASADENA, CA 91101
626-304-2616

MECHANICAL & PLUMBING ENGINEER
STANTEC CONSULTING INC
14130 RIVERSIDE DR. # 201
SHERMAN OAKS, CA 91423
818-377-8220

ELECTRICAL ENGINEER
FBA ENGINEERING
150 PAULARINO AVE. #A120
COSTA MESA, CA 92626
949-852-9995

CIVIL ENGINEER
KPFF CONSULTING ENGINEERS
700 SOUTH FLOWER ST. #2100
LOS ANGELES, CA 90017
213-418-0201

LANDSCAPE ARCHITECT
LYNN CAPOUYA, INC.
17992 MITCHELL SOUTH, #110
IRVINE, CA 92614
949-756-0150

LABORATORY CONSULTANT
RESEARCH FACILITIES DESIGN
3965 FIFTH AVE. #400
SAN DIEGO, CA 92103
619-297-0159

SCIENCE CENTER
SANTA ANA COLLEGE

RANCHO SANTIAGO
COMMUNITY COLLEGE
DISTRICT

1530 W. 17TH ST.
SANTA ANA, CA 92706

SANTA ANA
COLLEGE

I HEREBY CERTIFY THAT THIS PLAN, SPECIFICATION OR REPORT WAS PREPARED BY ME OR UNDER MY DIRECT SUPERVISION AND THAT I AM A DULY LICENSED PROFESSIONAL ENGINEER UNDER THE LAWS OF THE STATE OF CALIFORNIA.

LICENSED STRUCTURAL ENGINEER — YENG KEONG LOW — No. S4093 — SEPTEMBER 30, 2019 RENEWAL DATE — STATE OF CALIFORNIA

REGISTERED PROFESSIONAL ENGINEER — YENG KEONG LOW — No. S4093 — Exp. 12/31/18 — STRUCTURAL — STATE OF CALIFORNIA

NAME: YENG KEONG LOW
DATE: DECEMBER 31 2018
REGISTRATION NUMBER: S4093

NO	DESCRIPTION	DATE
2	ADDENDUM 2	09/01/2017

ISSUANCE HISTORY - THIS SHEET

DRAWN BY: Author | REVIEW BY: Approver

HGA NO: 3584-001-00

EXTERIOR WALL SECTIONS

DATE: JULY 06, 2017

S8.11

ADDENDA PACKAGE

© COPYRIGHT HAMMEL, GREEN AND ABRAHAMSON, INC.

Author 8/31/2017 10:46:09 AM C:\Users\Arbatel\Documents\14714_SAC-SC_S16_Arbatel.rvt

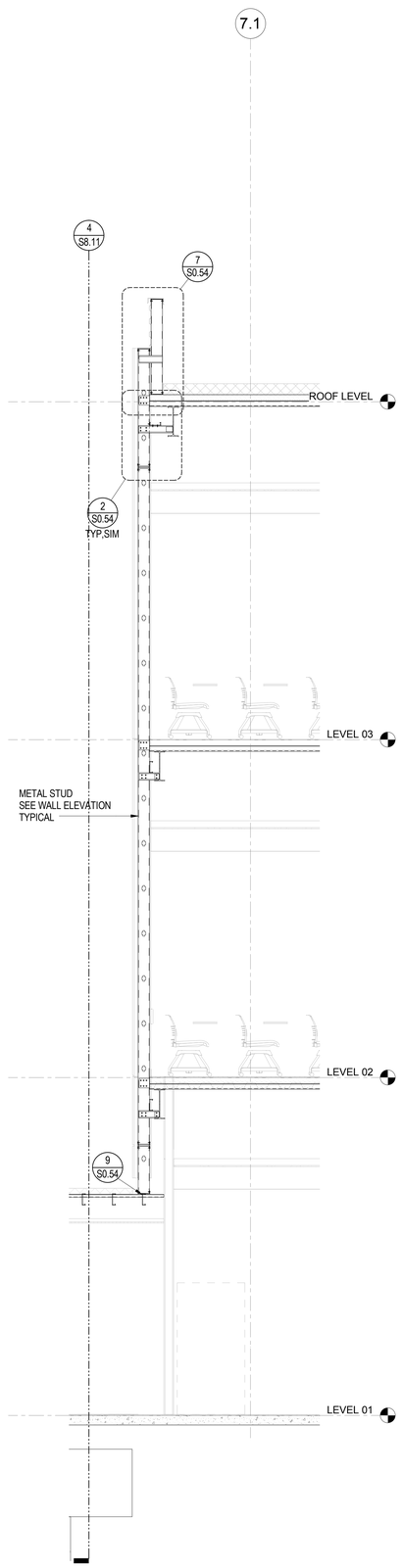

4 WALL SECTION
3/8" = 1'-0"

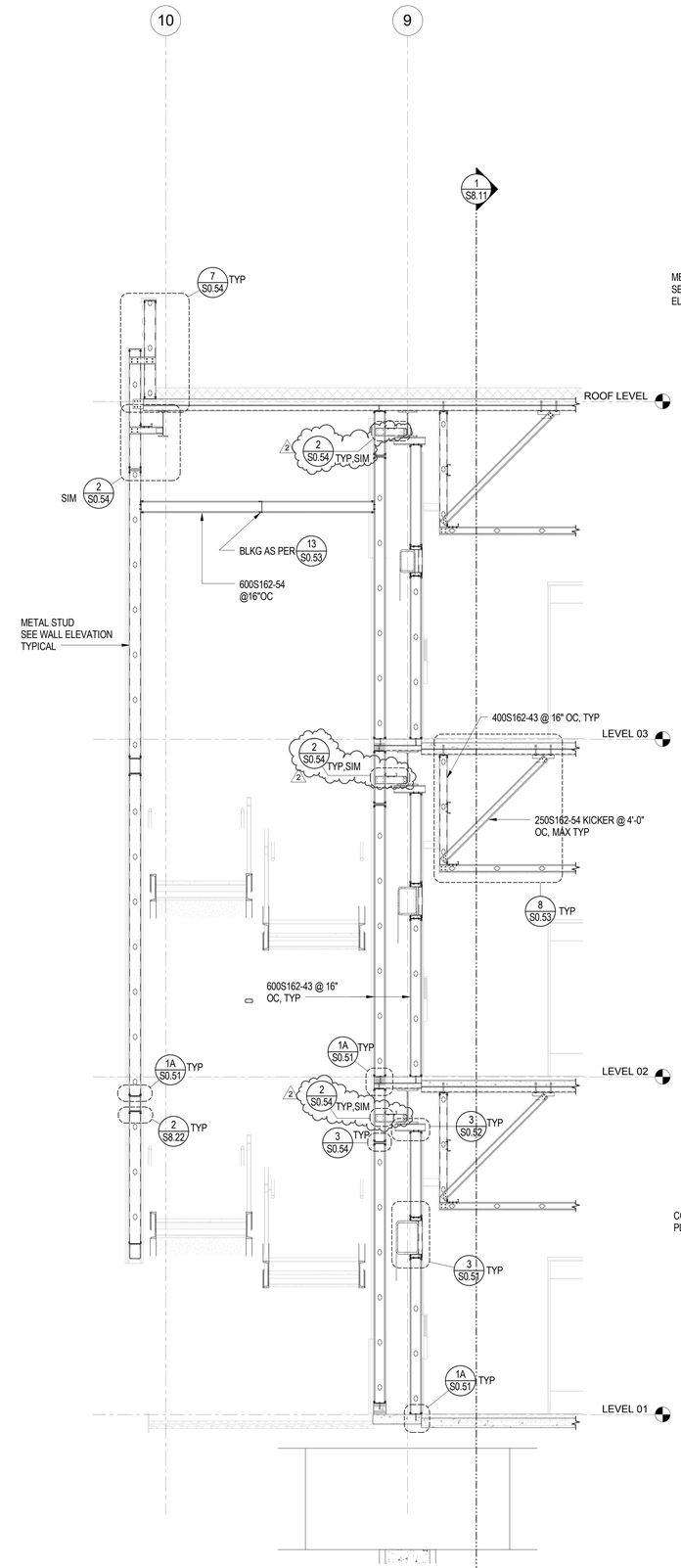

3 WALL SECTION
3/8" = 1'-0"

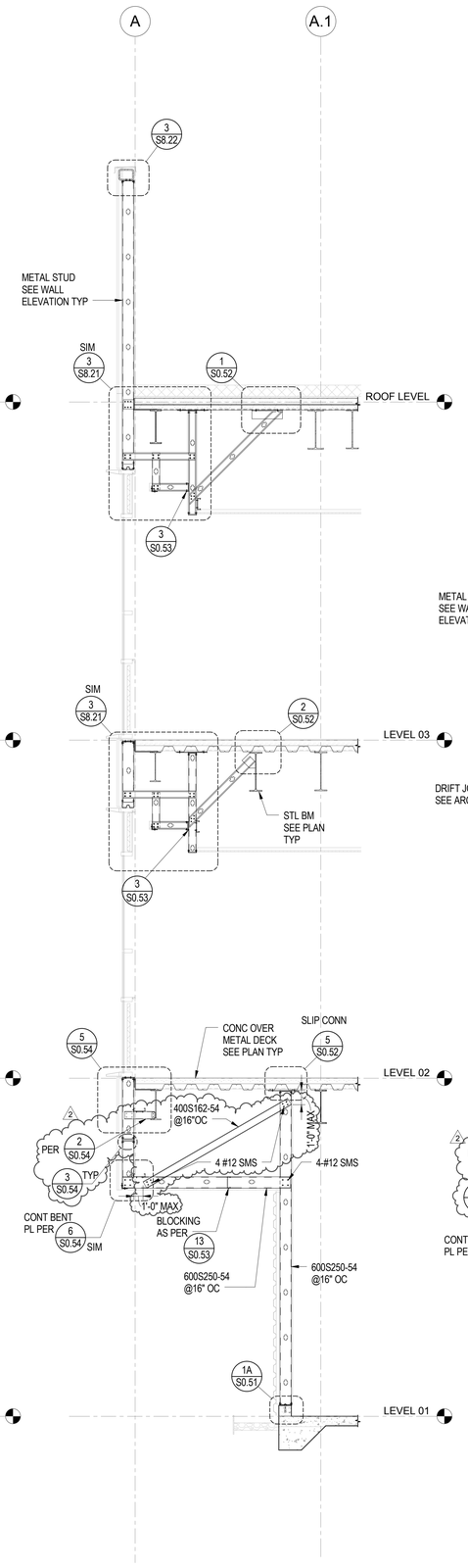

2 WALL SECTION
3/8" = 1'-0"

NOTE:
SEE ARCH WALL SECTION 2/A429

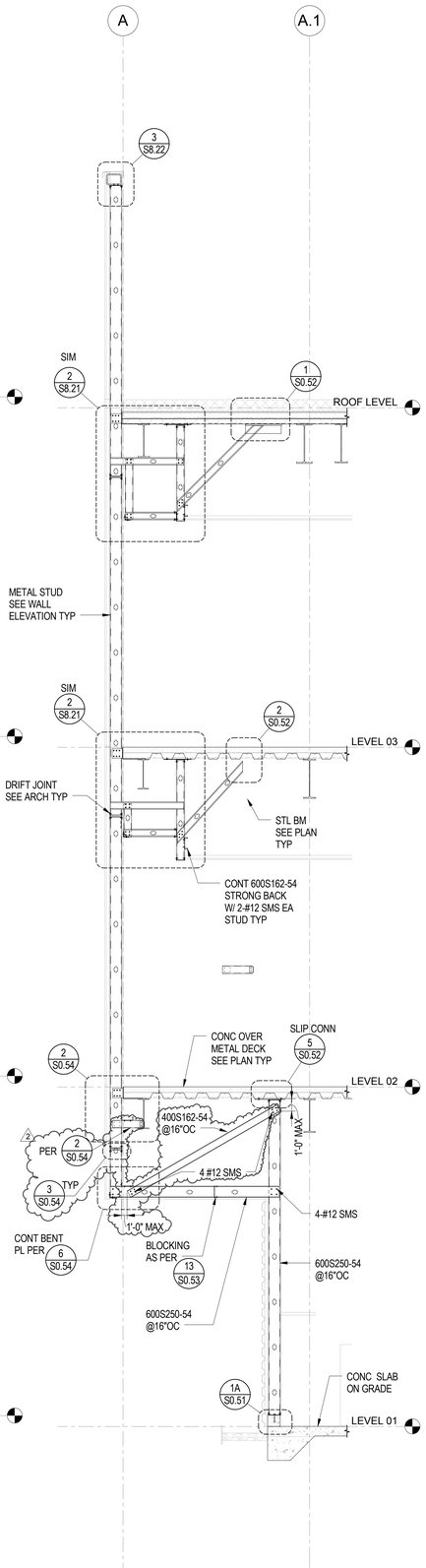

1 WALL SECTION
3/8" = 1'-0"

NOTE:
SEE ARCH WALL SECTION 1/A425

1918 Main Street, Third Floor
Santa Monica, California 90405
Telephone 310.557.7600

STRUCTURAL ENGINEER
SAIFUL BOUQUET
155 N LAKE AVE
PASADENA, CA 91101
626-304-2616

MECHANICAL & PLUMBING ENGINEER
STANTEC CONSULTING INC
14130 RIVERSIDE DR. # 201
SHERMAN OAKS, CA 91423
818-377-8220

ELECTRICAL ENGINEER
FBA ENGINEERING
150 PAULARINO AVE. #A120
COSTA MESA, CA 92626
949-852-9995

CIVIL ENGINEER
KPFF CONSULTING ENGINEERS
700 SOUTH FLOWER ST. #2100
LOS ANGELES, CA 90017
213-418-0201

LANDSCAPE ARCHITECT
LYNN CAPOUYA, INC.
17992 MITCHELL SOUTH, #110
IRVINE, CA 92614
949-756-0150

LABORATORY CONSULTANT
RESEARCH FACILITIES DESIGN
3965 FIFTH AVE. #400
SAN DIEGO, CA 92103
619-297-0159

SCIENCE CENTER
SANTA ANA COLLEGE

RANCHO SANTIAGO COMMUNITY COLLEGE DISTRICT

1530 W. 17TH ST.
SANTA ANA, CA 92706

SANTA ANA COLLEGE

I HEREBY CERTIFY THAT THIS PLAN, SPECIFICATION OR REPORT WAS PREPARED BY ME OR UNDER MY DIRECT SUPERVISION AND THAT I AM A DULY LICENSED PROFESSIONAL ENGINEER UNDER THE LAWS OF THE STATE OF CALIFORNIA.

LICENSED ARCHITECT YENG S. MAO No. 30317 RENEWAL DATE NOVEMBER 30, 2017 STATE OF CALIFORNIA

REGISTERED PROFESSIONAL ENGINEER YENG-KEONG LOW No. 54093 Exp. 12/31/18 STRUCTURAL STATE OF CALIFORNIA

NAME: YENG-KEONG LOW
DATE: DECEMBER 31 2018
REGISTRATION NUMBER: 54093

NO	DESCRIPTION	DATE
2	ADDENDUM 2	09/01/2017

ISSUANCE HISTORY - THIS SHEET

DRAWN BY: Author | REVIEW BY: Approver

HGA NO: 3584-001-00

EXTERIOR WALL SECTIONS

DATE: JULY 06, 2017

S8.12

ADDENDA PACKAGE

© COPYRIGHT HAMMEL, GREEN AND ABRAHAMSON, INC.

Author 8/31/2017 10:46:17 AM C:\Users\Arbatel\Documents\14714_SAC-SC_S16_Arbatelm.rvt

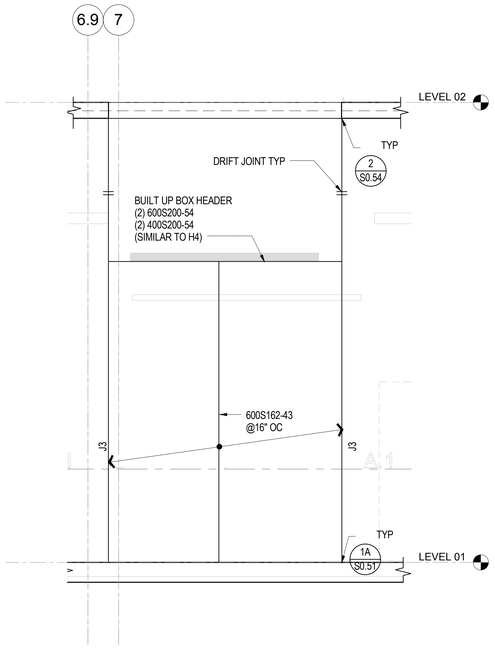

9 ELEVATION 5
1/2" = 1'-0"

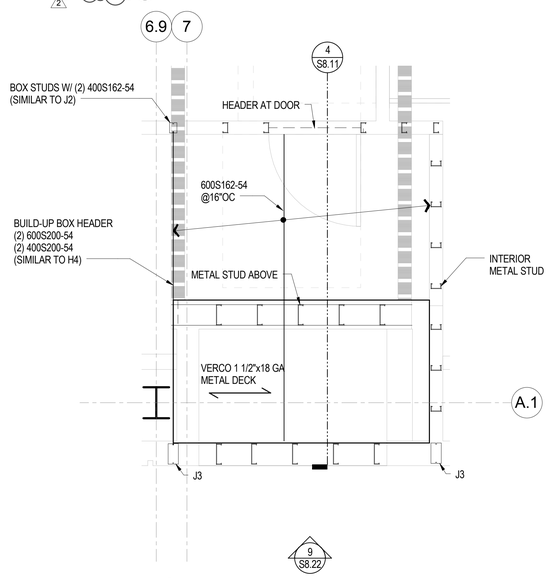

8 LEVEL 2 FRAMING PLAN
1/2" = 1'-0"

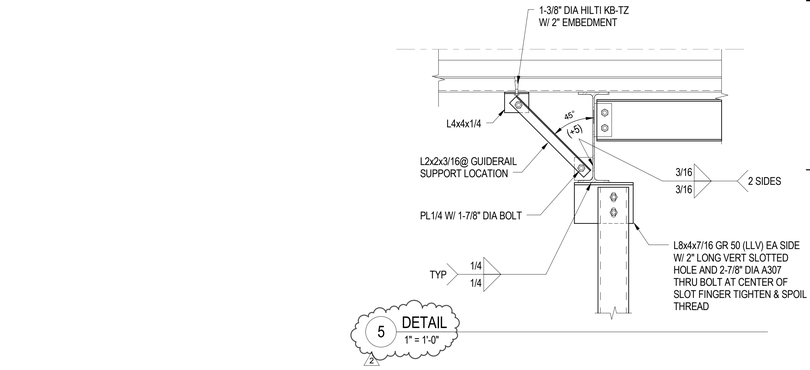

5 DETAIL
1" = 1'-0"

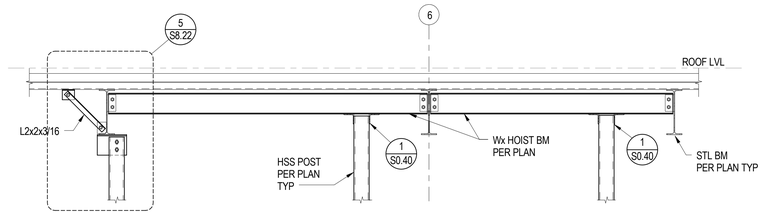

4 SECTION
1/2" = 1'-0"

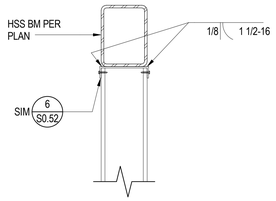

7 DETAIL
1" = 1'-0"

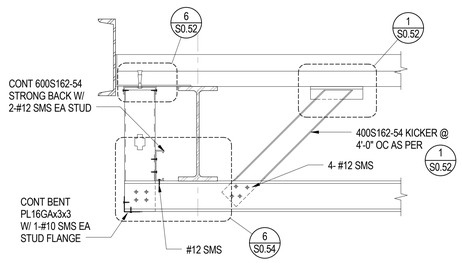

6 DETAIL
1" = 1'-0"

3 RIGID (HANGING) CONECTION DETAIL
1 1/2" = 1'-0"

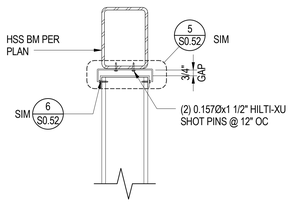

2 SLIP CONECTION DETAIL
1 1/2" = 1'-0"

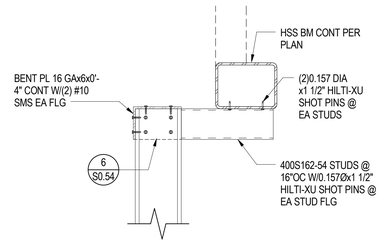

1 SECTION
1 1/2" = 1'-0"

1918 Main Street, Third Floor
Santa Monica, California 90405
Telephone 310.557.7600

STRUCTURAL ENGINEER
SAIFUL BOUQUET
155 N LAKE AVE
PASADENA, CA 91101
626-304-2616

MECHANICAL & PLUMBING ENGINEER
STANTEC CONSULTING INC
14130 RIVERSIDE DR. # 201
SHERMAN OAKS, CA 91423
818-377-8220

ELECTRICAL ENGINEER
FBA ENGINEERING
150 PAULARINO AVE. #A120
COSTA MESA, CA 92626
949-852-9995

CIVIL ENGINEER
KPFF CONSULTING ENGINEERS
700 SOUTH FLOWER ST. #2100
LOS ANGELES, CA 90017
213-418-0201

LANDSCAPE ARCHITECT
LYNN CAPOUYA, INC.
17992 MITCHELL SOUTH, #110
IRVINE, CA 92614
949-756-0150

LABORATORY CONSULTANT
RESEARCH FACILITIES DESIGN
3965 FIFTH AVE. #400
SAN DIEGO, CA 92103
619-297-0159

SCIENCE CENTER
SANTA ANA COLLEGE

RANCHO SANTIAGO COMMUNITY COLLEGE DISTRICT

1530 W. 17TH ST.
SANTA ANA, CA 92706

SANTA ANA COLLEGE

I HEREBY CERTIFY THAT THIS PLAN, SPECIFICATION OR REPORT WAS PREPARED BY ME OR UNDER MY DIRECT SUPERVISION AND THAT I AM A DULY LICENSED PROFESSIONAL ENGINEER UNDER THE LAWS OF THE STATE OF CALIFORNIA.

LICENSED ARCHITECT — REGISTERED PROFESSIONAL ENGINEER — No. 54093 Exp. 12/31/18 — STRUCTURAL — STATE OF CALIFORNIA

NAME: YENG KEONG LOW
DATE: DECEMBER 31 2018
REGISTRATION NUMBER: 54093

NO	DESCRIPTION	DATE
2	ADDENDUM 2	09/01/2017

ISSUANCE HISTORY - THIS SHEET

DRAWN BY: Author | REVIEW BY: Approver

HGA NO: 3584-001-00

SECTIONS AND DETAILS

DATE: JULY 06, 2017

S8.22

ADDENDA PACKAGE

© COPYRIGHT HAMMEL, GREEN AND ABRAHAMSON, INC.

Author 8/31/2017 10:46:22 AM C:\Users\Arbatt\Documents\471x_SAC-SC_S16_Arbatt.rvt

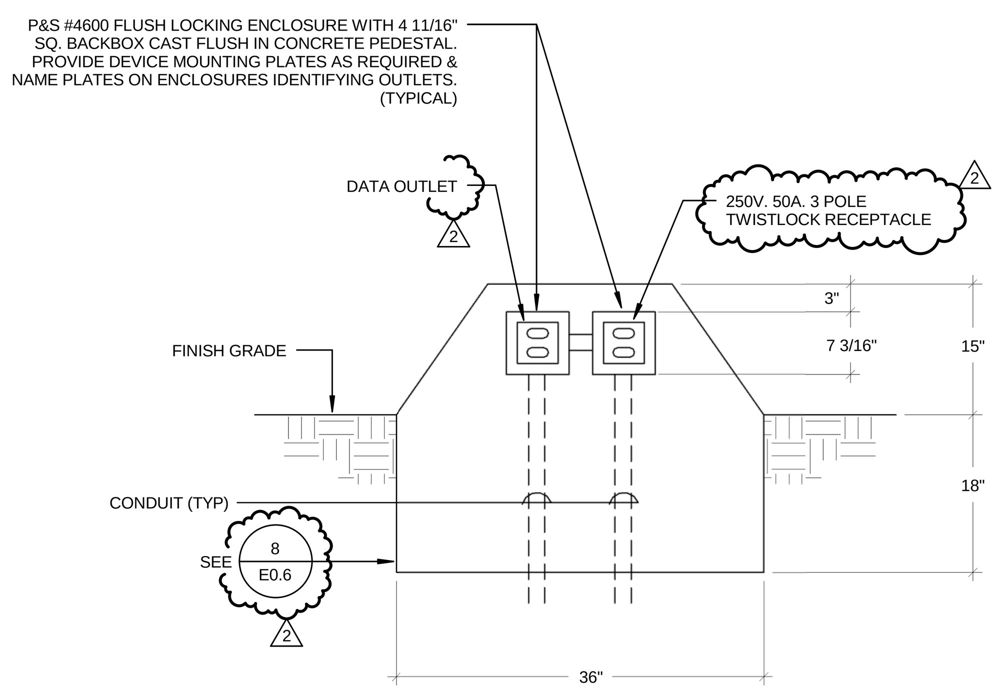

FIELD OUTLET PEDESTAL DETAIL

SCALE N.T.S. | 9

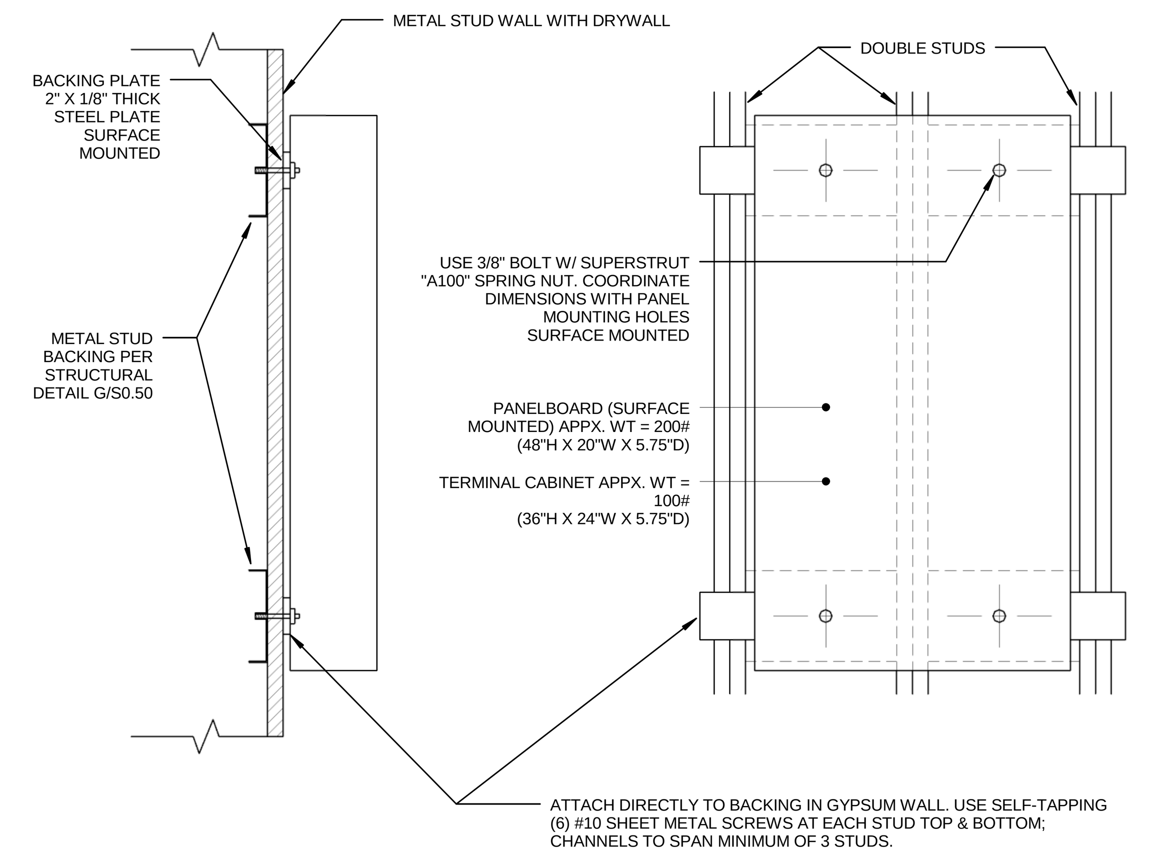

SURFACE MOUNTED PANELBOARD/TERMINAL CABINET ANCHORAGE

SCALE N.T.S. | 4

1. WALL ASSEMBLY -- THE 1 OR 2 HR FIRE-RATED GYPSUM WALLBOARD/STUD WALL ASSEMBLY SHALL BE CONSTRUCTED THE MATERIALS AND IN THE MANNER SPECIFIED IN OF THE INDIVIDUAL U300 OR U400 SERIES WALL AND PARTITION DESIGNS IN THE UL FIRE RESISTANCE DIRECTORY AND SHALL INCLUDE THE FOLLOWING CONSTRUCTION FEATURES:

   STUDS -- WALL FRAMING MAY CONSIST OF EITHER WOOD STUDS OR STEEL CHANNEL STUDS. WOOD STUDS TO CONSIST OF NOM 2 BY 4 IN. LUMBER SPACED 16 IN. OC. STEEL STUDS TO BE MIN 2-1/2 IN. WIDE AND SPACED MAX 24 IN. OC. WHEN STEEL STUDS ARE USED AND THE DIAM OF OPENING EXCEEDS THE WIDTH OF STUD CAVITY, THE OPENING SHALL BE FRAMED ON ALL SIDES USING LENGTHS OF STEEL STUD INSTALLED BETWEEN THE VERTICAL STUDS AND SCREW-ATTACHED TO THE STEEL STUDS AT EACH END. THE FRAMED OPENING IN THE WALL SHALL BE 4 TO 6 IN. WIDER AND 4 TO 6 IN. HIGHER THAN THE DIAM. OF THE PENETRATING ITEM SUCH THAT WHEN THE PENETRATING ITEM IS INSTALLED IN THE OPENING, A 2 TO 3 IN. CLEARANCE IS PRESENT BETWEEN THE PENETRATING ITEM AND THE FRAMING ON ALL FOUR SIDES.

   GYPSUM BOARD* -- 5/8 IN. THICK, 4 FT WIDE WITH SQUARE OR TAPERED EDGES. THE GYPSUM BOARD TYPE, THICKNESS, NUMBER OF LAYERS, FASTENER TYPE AND SHEET ORIENTATION SHALL BE AS SPECIFIED IN THE INDIVIDUAL U300 OR U400 SERIES DESIGN IN THE UL FIRE RESISTANCE DIRECTORY. MAX DIAM OF OPENING IS 32-1/4 IN. FOR STEEL STUD WALLS. MAX DIAM OF OPENING IS 14-1/2 IN. FOR WOOD STUD WALLS. THE F RATING OF THE FIRESTOP SYSTEM IS EQUAL TO THE FIRE RATING OF THE WALL ASSEMBLY.

2. THROUGH-PENETRANTS -- ONE METALLIC PIPE, CONDUIT OR TUBING TO BE INSTALLED EITHER CONCENTRICALLY OR ECCENTRICALLY WITHIN THE FIRESTOP SYSTEM. THE ANNULAR SPACE SHALL BE MIN 0 IN. TO MAX 2-1/4 IN. PIPE MAY BE INSTALLED WITH CONTINUOUS POINT CONTACT. PIPE, CONDUIT OR TUBING MAY BE INSTALLED AT AN ANGLE NOT GREATER THAN 45 DEGREES FROM PERPENDICULAR. PIPE, CONDUIT OR TUBING TO BE RIGIDLY SUPPORTED ON BOTH SIDES OF WALL ASSEMBLY. THE FOLLOWING TYPES AND SIZES OF METALLIC PIPES, CONDUITS OR TUBING MAY BE USED:

   A. STEEL PIPE -- NOM 30 IN DIAM (OR SMALLER) SCHEDULE 10 (OR HEAVIER) STEEL PIPE.

   B. IRON PIPE -- NOM 30 IN. DIAM (OR SMALLER) CAST OR DUCTILE IRON PIPE.

   C. CONDUIT -- NOM 4 IN DIAM (OR SMALLER) STEEL ELECTRICAL METALLIC TUBING OR 6 IN. DIAM STEEL CONDUIT.

   D. COPPER TUBING -- NOM 6 IN. DIAM (OR SMALLER) TYPE L (OR HEAVIER) COPPER TUBING.

   E. COPPER PIPE -- NOM 6 IN. DIAM (OR SMALLER) REGULAR (OR HEAVIER) COPPER PIPE.

3. FILL, VOID OR CAVITY MATERIAL* -- SEALANT -- MIN 5/8 IN. THICKNESS OF FILL MATERIAL APPLIED WITHIN THE ANNULUS, FLUSH WITH BOTH SURFACES OF WALL. AT THE POINT OR CONTINUOUS CONTACT LOCATIONS BETWEEN PIPE AND WALL, A MIN 1/2 IN. DIAM BEAD OF FILL MATERIAL SHALL BE APPLIED AT THE PIPE WALL INTERFACE ON BOTH SURFACES OF WALL .

HILTI CONSTRUCTION CHEMICALS, DIV OF
HILTI INC -- FS-ONE SEALANT
*BEARING THE UL CLASSIFICATION MARK

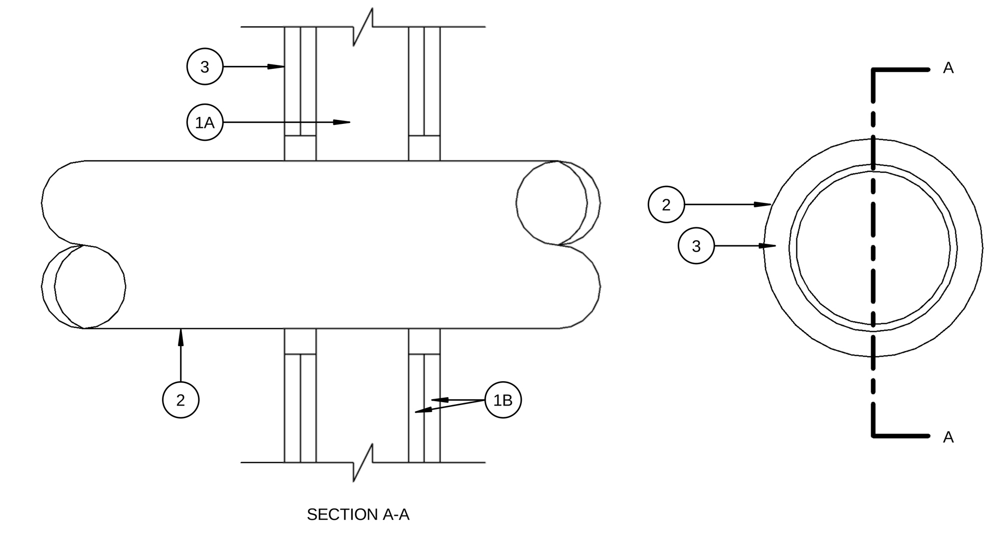

SECTION A-A

System No. W-L-1054
F Ratings - 1 and 2 Hr (See Items 1 and 3)
T Rating - 0 Hr
L Rating At Ambient - Less Than 1 CFM/Sq Ft
L Rating At 400 F - 4 CFM/Sq Ft

RATED STUD WALL FIRE STOP DETAIL

SCALE N.T.S. | 1

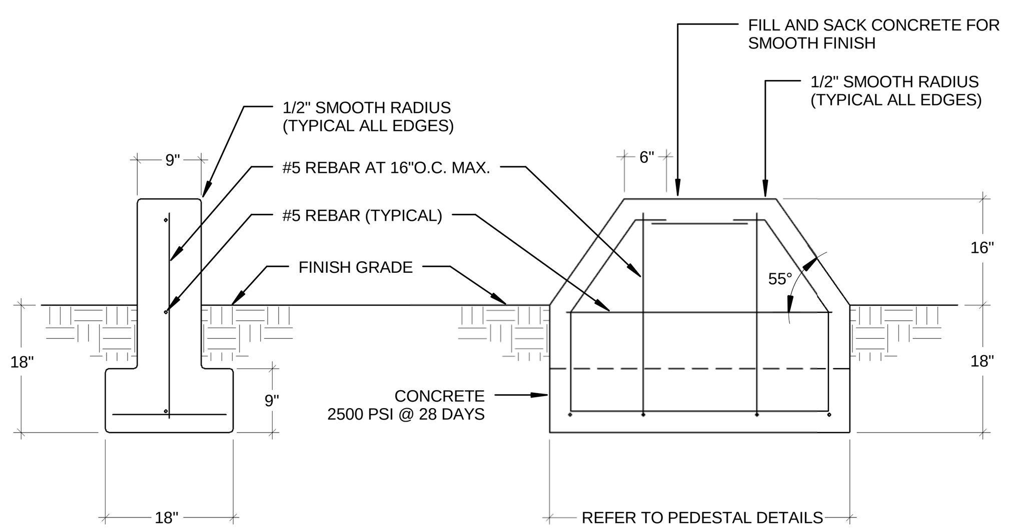

FIELD PEDESTAL REINFORCEMENT DETAIL

SCALE N.T.S. | 8

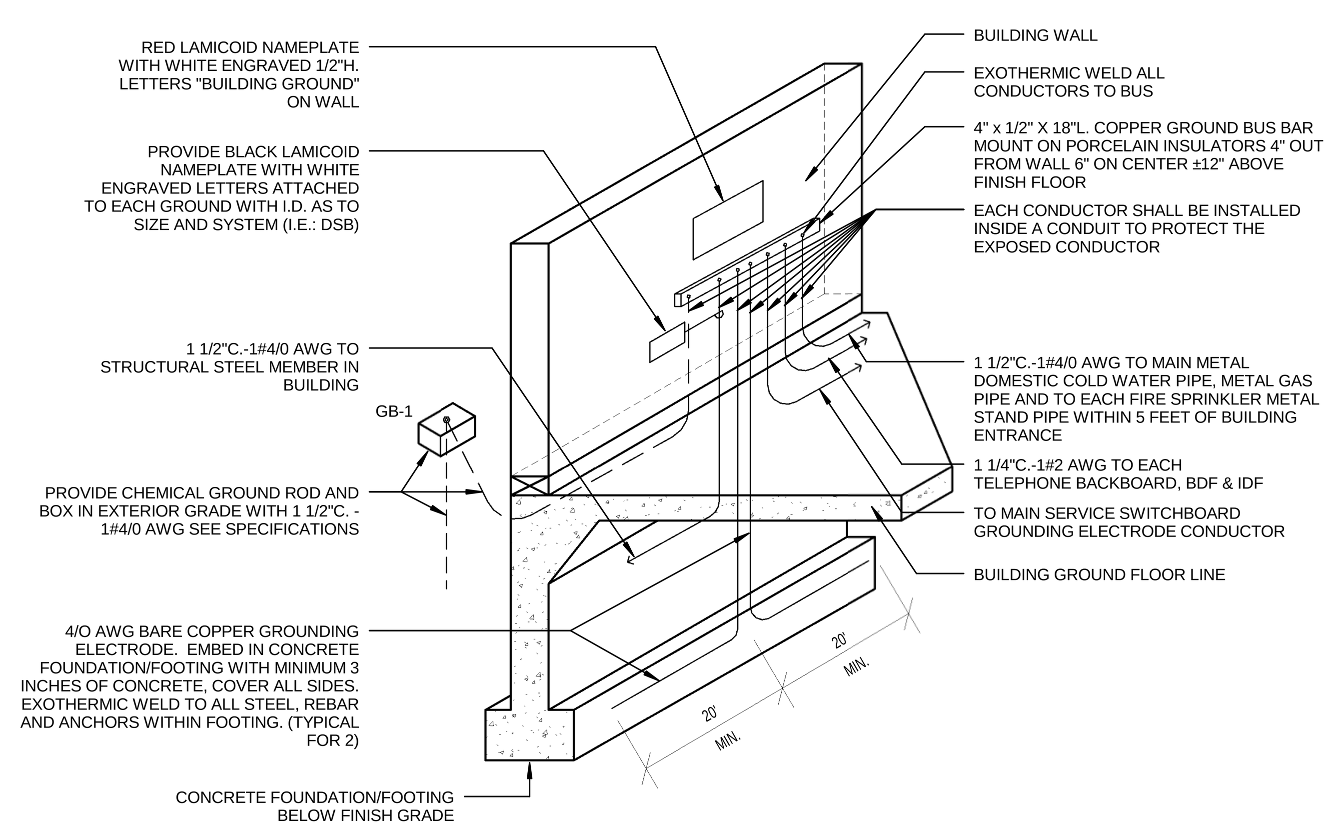

BUILDING ELECTRICAL SERVICE GROUND BUS DETAIL

SCALE N.T.S. | 5

1. FLOOR OR WALL ASSEMBLY MIN 4-1/2 IN. THICK REINFORCED LIGHTWEIGHT OR NORMAL WEIGHT (100-150 PCF) CONCRETE. WALL MAY ALSO BE CONSTRUCTED OF ANY UL CLASSIFIED CONCRETE BLOCKS*. MAX DIAM OF OPENING IS 32 IN.

2. METALLIC SLEEVE (OPTIONAL) NOM 32 IN. DIAM (OR SMALLER) SCHEDULE 40 (OR HEAVIER) STEEL SLEEVE CAST OR GROUTED INTO FLOOR OR WALL ASSEMBLY, FLUSH WITH FLOOR OR WALL SURFACES.

3. THROUGH-PENETRANT ONE METALLIC PIPE OR CONDUIT TO BE INSTALLED EITHER CONCENTRICALLY OR ECCENTRICALLY WITHIN THE FIRESTOP SYSTEM. THE ANNULAR SPACE BETWEEN PIPE OR CONDUIT AND PERIPHERY OF OPENING SHALL BE MIN 0 IN. (POINT CONTACT) TO MAX 1-7/8 IN. PIPE MAY BE INSTALLED WITH CONTINUOUS POINT CONTACT. PIPE OR CONDUIT TO BE RIGIDLY SUPPORTED ON BOTH SIDES OF FLOOR OR WALL ASSEMBLY. THE FOLLOWING TYPES AND SIZES OF METALLIC PIPES OR CONDUITS MAY BE USED:

   A. STEEL PIPE: NOM 30 IN. DIAM (OR SMALLER) SCHEDULE 10 (OR HEAVIER) STEEL PIPE.

   B. IRON PIPE: NOM 30 IN. DIAM (OR SMALLER) CAST OR DUCTILE IRON PIPE.

   C. COPPER PIPE: NOM 6 IN. DIAM (OR SMALLER) REGULAR (OR HEAVIER) COPPER PIPE.

   D. COPPER TUBING: NOM 6 IN. DIAM (OR SMALLER) TYPE L (OR HEAVIER) COPPER TUBING.

   E. CONDUIT: NOM 6 IN. DIAM (OR SMALLER) STEEL CONDUIT.

   F. CONDUIT: NOM 4 IN. DIAM (OR SMALLER) STEEL ELECTRICAL METALLIC TUBING (EMT).

4. FIRE STOP SYSTEM THE FIRESTOP SYSTEM SHALL CONSIST OF THE FOLLOWING:

   A. PACKING MATERIAL MIN 4 IN. THICKNESS OF MIN 4 PCF MINERAL WOOL BATT INSULATION FIRMLY PACKED INTO OPENING AS A PERMANENT FORM. PACKING MATERIAL TO BE RECESSED FROM TOP SURFACE OF FLOOR OR FROM BOTH SURFACES OF WALL AS REQUIRED TO ACCOMMODATE THE REQUIRED THICKNESS OF FILL MATERIAL.

   B. FILL, VOID OR CAVITY MATERIAL* -- SEALANT MIN 1/4 IN. THICKNESS OF FILL MATERIAL APPLIED WITHIN THE ANNULUS, FLUSH WITH TOP SURFACE OF FLOOR OR WITH BOTH SURFACES OF WALL. AT THE POINT OR CONTINUOUS CONTACT LOCATIONS BETWEEN PIPE AND CONCRETE, A MIN 1/4 IN. DIAM BEAD OF FILL MATERIAL SHALL BE APPLIED AT THE CONCRETE/PIPE INTERFACE ON THE TOP SURFACE OF FLOOR AND ON BOTH SURFACES OF WALL.

HILTI CONSTRUCTION CHEMICALS, DIV OF
HILTI INC - FS-One Sealant
*Bearing the UL Classification Marking

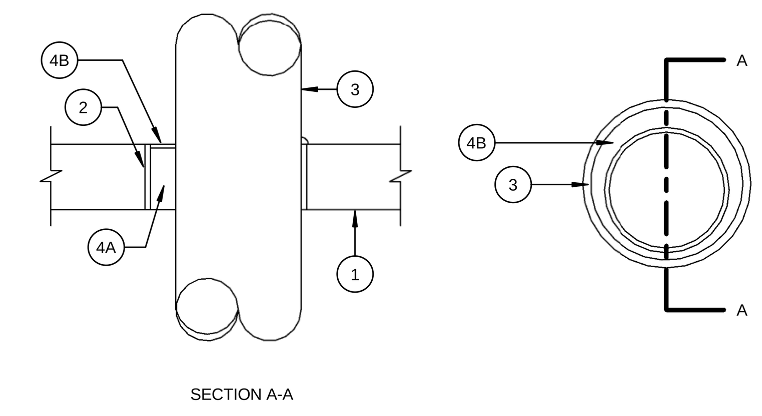

SECTION A-A

System No. C-AJ-1226
F RATING = 3-HR.
T RATING = 0-HR.
L Rating At Ambient - Less than 1 CFM/Sq Ft
L Rating At 400 F - 4 CFM/Sq Ft

RATED CONCRETE FLOOR/WALL SINGLE CONDUIT FIRE STOP DETAIL

SCALE N.T.S. | 2

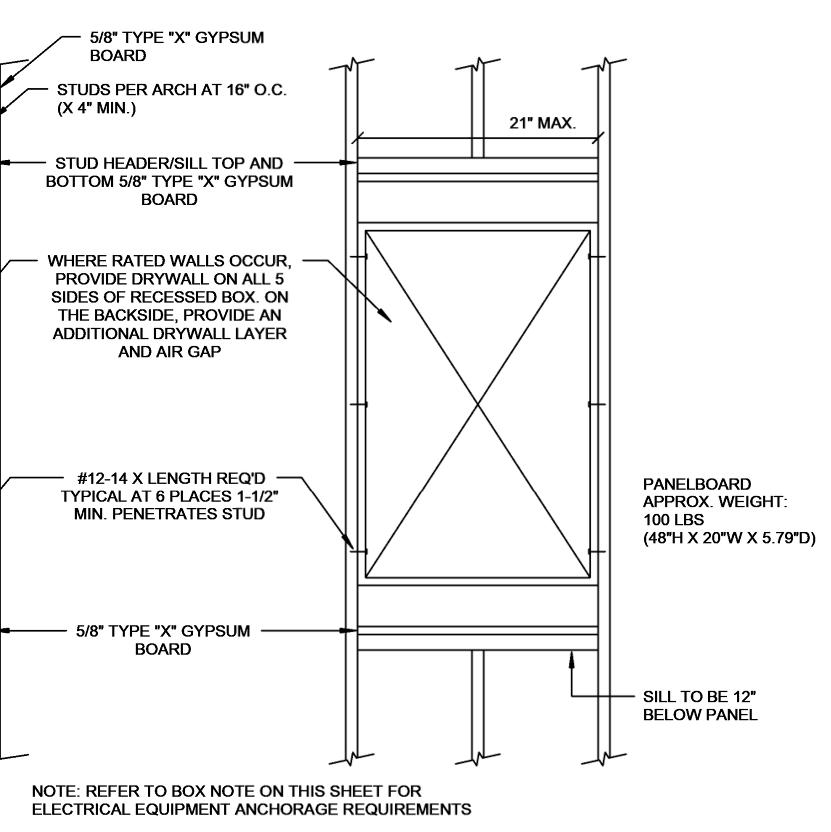

PANELBOARD/TERMINAL CABINET ANCHORAGE-FLUSH

SCALE N.T.S. | 7

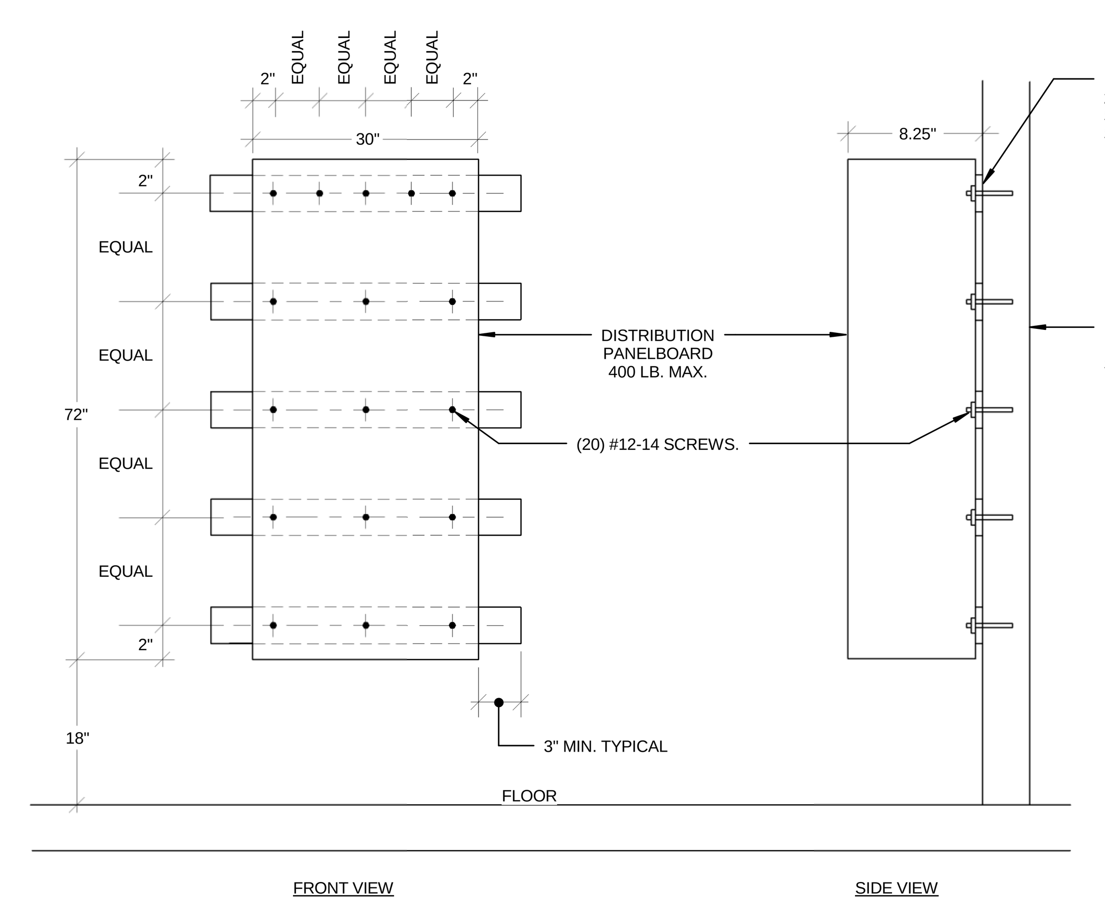

DISTRIBUTION PANELBOARD ANCHORAGE

SCALE N.T.S. | 6

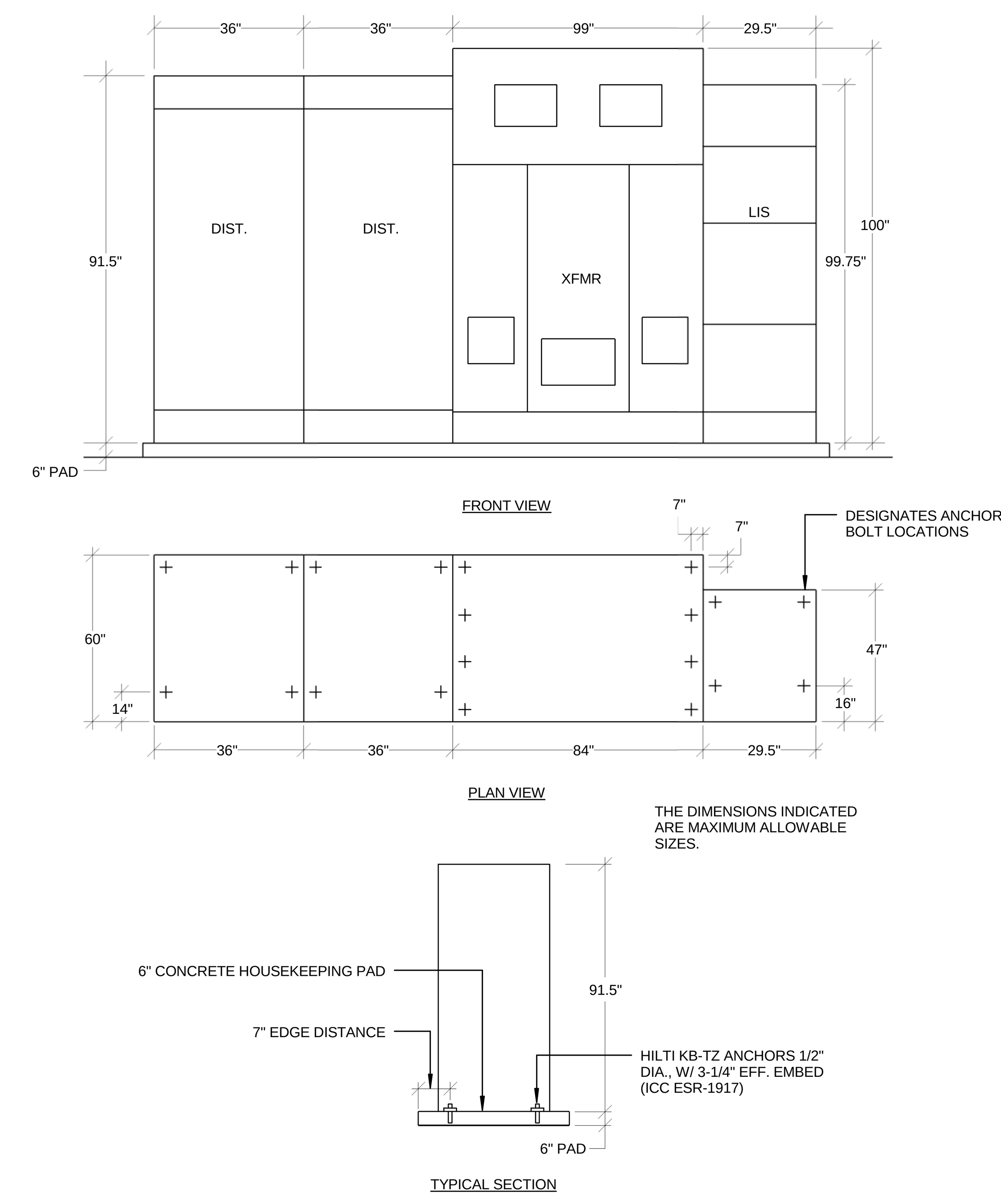

UNIT SUBSTATION USSC ANCHORAGE

SCALE N.T.S. | 3

HGA
1918 Main Street, Third Floor
Santa Monica, California 90405
Telephone 310.557.7600

STRUCTURAL ENGINEER
SAIFUL BOUQUET
155 N LAKE AVE
PASADENA, CA 91101
626-304-2616

MECHANICAL & PLUMBING ENGINEER
STANTEC CONSULTING INC
14130 RIVERSIDE DR. # 201
SHERMAN OAKS, CA 91423
818-377-8220

ELECTRICAL ENGINEER
FBA ENGINEERING
150 PAULARINO AVE. #A120
COSTA MESA, CA 92626
949-852-9995

CIVIL ENGINEER
KPFF CONSULTING ENGINEERS
700 SOUTH FLOWER ST. #2100
LOS ANGELES, CA 90017
213-418-0201

LANDSCAPE ARCHITECT
LYNN CAPOUYA, INC.
17992 MITCHELL SOUTH, #110
IRVINE, CA 92614
949-756-0150

LABORATORY CONSULTANT
RESEARCH FACILITIES DESIGN
3965 FIFTH AVE. #400
SAN DIEGO, CA 92103
619-297-0159

SCIENCE CENTER
SANTA ANA COLLEGE
RANCHO SANTIAGO COMMUNITY COLLEGE DISTRICT
1530 W. 17TH ST.
SANTA ANA, CA 92706

SANTA ANA COLLEGE

I HEREBY CERTIFY THAT THIS PLAN, SPECIFICATION OR REPORT WAS PREPARED BY ME OR UNDER MY DIRECT SUPERVISION AND THAT I AM A DULY LICENSED ARCHITECT UNDER THE LAWS OF THE STATE OF CA

NAME: JAMES G. MATSON
DATE: MAY 16, 2017
REGISTRATION NUMBER: C13036

NO	DESCRIPTION	DATE
2	ADDENDUM 2	9/1/17

ISSUANCE HISTORY - THIS SHEET

DRAWN BY: FBA | REVIEW BY: R. Rogers

HGA NO: 3584-001-00

DETAILS

DATE: JULY 06, 2017

E0.6

ADDENDA PACKAGE

© COPYRIGHT HAMMEL, GREEN AND ABRAHAMSON, INC.

FBA 8/30/2017 5:34:15 PM C:\Users\JGomez\Desktop\REVIT PROJECTS\SAC SCIENCE CENTER\SAC_Science Center_E_16_Local.rvt

Branch Panel: 1PB1

SANTA ANA COLLEGE SCIENCE CENTER

Location: ELECTRICAL CLOSET SC114 | **Volts:** 120/208 Wye | **A.I.C. Rating:**
Supply From: PDBB | **Phases:** 3 | **Mains Type:**
Mounting: Surface | **Wires:** 4 | **Mains Rating:** 225 A
Lugs Only: No | **MCB Rating:** 225 A

CKT	Circuit Description	Qua n	Trip	Pole	A	B	C	Pole	Trip	Qua n	Circuit Description	CKT
1	Motor CORRIDOR SC100-1	1	20 A	1	500 VA 1860 VA			1	20 A	3	Receptacle Room SC101, SC100-1	2
3	Motor SCIENCE LEARNING CENTER SC103	1	20 A	1	500 VA 1040 VA			1	20 A	4	Receptacle MODEL STORAGE / LOCKERS...	4
5	Motor SCIENCE LEARNING CENTER SC103	1	20 A	1		500 VA 1860 VA		1	20 A	1	Receptacle WORK ROOM SC110-2	6
7	Receptacle CONFERENCE SC103-2	3	20 A	1	540 VA 1500 VA			1	20 A	1	Receptacle WORK ROOM SC110-2	8
9	Receptacle Room SC103-2, SC103	3	20 A	1		540 VA 1860 VA		1	20 A	5	Receptacle OFFICE SC116-1	10
11	Receptacle WORK ROOM SC110-2	5	20 A	1			900 VA 540 VA	1	20 A	3	Receptacle OFFICE SC116-1	12
13	Receptacle WORK ROOM SC110-2	5	20 A	1	900 VA 2020 VA			1	20 A	6	Receptacle RECEPTION SC116	14
15	Receptacle WORK ROOM SC110-2	1	20 A	1		1200 VA 900 VA		1	20 A	5	Receptacle RECEPTION SC116	16
17	Receptacle WORK ROOM SC110-2	1	20 A	1			800 VA 1080 VA	1	20 A	6	Receptacle CONFERENCE SC110-3	18
19	Receptacle EXTERIOR GFI	1	20 A	1	180 VA 900 VA			1	20 A	5	Receptacle CONFERENCE SC110-3	20
21	Power LOBBY SC105	1	20 A	1	500 VA 180 VA			1	20 A	1	Receptacle MEN'S RESTROOM SC102	22
23	Receptacle Room SC106, SC102, SC104	4	20 A	1		720 VA 180 VA		1	20 A	1	Receptacle MEN'S RESTROOM SC102	24
25	Power ELECTRIC DRINKING FOUNTAIN	2	20 A	1	680 VA 360 VA			1	20 A	2	Receptacle ELECTRICAL CLOSET SC114	26
27	Receptacle OPEN OFFICE SC110-1	1	20 A	1	180 VA 150 VA			1	20 A	3	Motor CORRIDOR SC100-1	28
29	Receptacle OPEN OFFICE SC110-1	1	20 A	1			1200 VA 100 VA	1	20 A	1	Power	30
31	Spare	--	20 A	1	0 VA 0 VA			1	20 A	--	Spare	32
33	Spare	--	20 A	1		0 VA 0 VA		1	20 A	--	Spare	34
35	Spare	--	20 A	1			0 VA 0 VA	1	20 A	--	Spare	36
37	Provision	--	--	--	0 VA 0 VA			--	--	--	Provision	38
39	Provision	--	--	--		0 VA 0 VA		--	--	--	Provision	40
41	Provision	--	--	--			0 VA 0 VA	--	--	--	Provision	42
					Total... 9440 VA	7050 VA	6820 VA					
					Total... 79 A	59 A	57 A					

Legend:

Load Classification	Connected Load	Demand Factor	Estimated Demand	Panel Totals	
Motor	1500 VA	100.00%	1500 VA		
Power	1750 VA	100.00%	1750 VA	Total Conn. Load:	23310 VA
Receptacle	20060 VA	74.93%	15030 VA	Total Est. Demand:	18280 VA
				Total Conn.:	65 A
				Total Est. Demand:	51 A

Notes:

Branch Panel: 1PA1

SANTA ANA COLLEGE SCIENCE CENTER

Location: MAIN ELECTRICAL SC130 | **Volts:** 120/208 Wye | **A.I.C. Rating:**
Supply From: PDBA | **Phases:** 3 | **Mains Type:**
Mounting: Surface | **Wires:** 4 | **Mains Rating:** 225 A
Lugs Only: No | **MCB Rating:** 225 A

CKT	Circuit Description	Qua n	Trip	Pole	A	B	C	Pole	Trip	Qua n	Circuit Description	CKT
1	Motor CORRIDOR SC100	1	20 A	1	500 VA 720 VA			1	20 A	4	Receptacle CORRIDOR SC100	2
3	Motor CORRIDOR SC100	1	20 A	1		500 VA 540 VA		1	20 A	3	Receptacle CORRIDOR SC100	4
5	Receptacle LARGE CLASSROOM (DIVISIBLE)...	4	20 A	1			720 VA 180 VA	1	20 A	1	Receptacle STORAGE SC124	6
7	Receptacle LARGE CLASSROOM (DIVISIBLE)...	4	20 A	1	720 VA 360 VA			1	20 A	2	Receptacle STORAGE SC124	8
9	Receptacle LARGE CLASSROOM (DIVISIBLE)...	4	20 A	1		720 VA 1800 VA		1	20 A	1	Receptacle MULTI DISC COMPUTER LAB SC115	10
11	Receptacle LARGE CLASSROOM (DIVISIBLE)...	4	20 A	1			720 VA 720 VA	1	20 A	4	Receptacle Room SC126, SC124, SC128	12
13	Receptacle MULTI DISC COMPUTER LAB SC115	3	20 A	1	540 VA 900 VA			1	20 A	5	Receptacle Room SC124, SC128, SC126	14
15	Power MULTI DISC COMPUTER LAB SC115	1	20 A	1		1000 VA 1800 VA		1	20 A	1	Receptacle LARGE CLASSROOM (DIVISIBLE)...	16
17	MLCP	1	20 A	1			500 VA 1800 VA	1	20 A	1	Receptacle LARGE CLASSROOM (DIVISIBLE)...	18
19	Receptacle MAIN ELECTRICAL SC130	1	20 A	1	180 VA 2000 VA			1	20 A	2	Power Room SC113-1, SC113-2	20
21	Receptacle	3	20 A	1		900 VA 300 VA		1	20 A	6	Power Room SC115, SC113-2, SC100, SC130	22
23	Receptacle	2	20 A	1			720 VA 0 VA	1	20 A	--	Spare	24
25	Power LARGE CLASSROOM (DIVISIBLE)...	1	20 A	1	500 VA 0 VA			1	20 A	--	Spare	26
27	Spare	--	20 A	1	0 VA 0 VA			1	20 A	--	Spare	28
29	Spare	--	20 A	1			0 VA 0 VA	1	20 A	--	Spare	30
31	Spare	--	20 A	1	0 VA 0 VA			1	20 A	--	Spare	32
33	Spare	--	20 A	1		0 VA 0 VA		1	20 A	--	Spare	34
35	Spare	--	20 A	1			0 VA 0 VA	1	20 A	--	Spare	36
37	Spare	--	20 A	1	0 VA 0 VA			1	20 A	--	Spare	38
39	Spare	--	20 A	1		0 VA 0 VA		1	20 A	--	Spare	40
41	Spare	--	20 A	1			0 VA 0 VA	1	20 A	--	Spare	42
					Total... 6420 VA	7560 VA	5360 VA					
					Total... 55 A	64 A	45 A					

Legend:

Load Classification	Connected Load	Demand Factor	Estimated Demand	Panel Totals	
Motor	1000 VA	100.00%	1000 VA		
Power	3800 VA	100.00%	3800 VA	Total Conn. Load:	18840 VA
Receptacle	14040 VA	85.61%	12020 VA	Total Est. Demand:	16820 VA
				Total Conn.:	52 A
				Total Est. Demand:	47 A

Notes:

Branch Panel: 1LHA

SANTA ANA COLLEGE SCIENCE CENTER

Location: MAIN ELECTRICAL SC130 | **Volts:** 480/277 Wye | **A.I.C. Rating:**
Supply From: MHDB | **Phases:** 3 | **Mains Type:**
Mounting: Surface | **Wires:** 4 | **Mains Rating:** 225 A
Lugs Only: No | **MCB Rating:** 225 A

CKT	Circuit Description	Qua n	Trip	Pole	A	B	C	Pole	Trip	Qua n	Circuit Description	CKT
1	Lighting Room SC124, SC128, SC130, SC132,...	43	20 A	1	2745 VA 2086 VA			1	20 A	63	Lighting Room SC100, SC100-1, SC105	2
3	Lighting Room SC113-1, SC113-2, SC115, SC11...	45	20 A	1		6620 VA 225 VA		1	20 A	9	Lighting Room SC116,SC110-1,SC104,SC102	4
5	Lighting Room SC122, SC120, SC118	19	20 A	1			3121 VA 275 VA	1	20 A	11	Lighting BIG BOX EXTERIOR LIGHTING	6
7	Lighting Room SC118, SC120	23	20 A	1	3144 VA 610 VA			1	20 A	40	Lighting MURAL LIGHTING	8
9	Lighting OFFICE SC116-1	22	20 A	1		2575 VA 112 VA		1	20 A	1	Lighting SMALL BOX	10
11	Lighting CONFERENCE SC103-2	18	20 A	1			2845 VA 11926...	3	70 A	1	3LHA	12
13	2LHA	1	70 A	3	8763 VA 7233 VA			--	--	--	--	14
15	--	--	--	--		9635 VA 7056 VA		--	--	--	--	16
17	Lighting EXTERIOR LIGHTING	10	20 A	1	1500 VA 75 VA			1	20 A	12	Lighting GREEN HOUSE	18
19	Lighting EXTERIOR LIGHTING	11	20 A	1		1650 VA 1028 VA		1	20 A	3	Lighting EXTERIOR LIGHTING	20
21	Lighting EXTERIOR LIGHTING	5	20 A	1			250 VA 732 VA	1	20 A	7	Lighting EXTERIOR LIGHTING	22
23	Lighting EXTERIOR LIGHTING	6	20 A	1	300 VA 0 VA			1	20 A	5	Lighting EXTERIOR LIGHTING	24
25	Lighting EXTERIOR LIGHTING	6	20 A	1		300 VA 0 VA		1	20 A	--	Spare	26
27	Spare	--	20 A	1			0 VA 0 VA	1	20 A	--	Spare	28
29	Spare	--	20 A	1	0 VA 0 VA			1	20 A	--	Spare	30
31	Spare	--	20 A	1		0 VA 0 VA		1	20 A	--	Spare	32
33	Spare	--	20 A	1			0 VA 0 VA	1	20 A	--	Spare	34
35	Spare	--	20 A	1			0 VA 0 VA	1	20 A	--	Spare	36
37	Provision	--	--	--	0 VA 0 VA			--	--	--	Provision	38
39	Provision	--	--	--		0 VA 0 VA		--	--	--	Provision	40
41	Provision	--	--	--			0 VA 0 VA	--	--	--	Provision	42
					Total... 26457 VA	29201 VA	28948 VA					
					Total... 96 A	107 A	106 A					

Legend:

Load Classification	Connected Load	Demand Factor	Estimated Demand	Panel Totals	
Lighting	86423 VA	100.00%	86423 VA		
				Total Conn. Load:	86423 VA
				Total Est. Demand:	86423 VA
				Total Conn.:	104 A
				Total Est. Demand:	104 A

Notes:

Branch Panel: W

SANTA ANA COLLEGE SCIENCE CENTER

Location: WELDING AREA SC229 | **Volts:** 480/277 Wye | **A.I.C. Rating:**
Supply From: | **Phases:** 3 | **Mains Type:**
Mounting: Surface | **Wires:** 4 | **Mains Rating:** 400 A
MCB Rating: 400 A

CKT	Circuit Description	Qua n	Trip	Pole	A	B	C	Pole	Trip	Qua n	Circuit Description	CKT
1	Receptacle WELDING AREA	1	50 A	3	11095... 11095...			3	50 A	1	Receptacle WELDING AREA	2
3	--	--	--	--		11095... 11095...		--	--	--	--	4
5	--	--	--	--			11095... 11095...	--	--	--	--	6
7	Receptacle WELDING AREA	1	50 A	3	11095... 11095...			3	50 A	1	Receptacle WELDING AREA	8
9	--	--	--	--		11095... 11095...		--	--	--	--	10
11	--	--	--	--			11095... 11095...	--	--	--	--	12
13	Receptacle WELDING AREA	1	50 A	3	11095... 11095...			3	50 A	1	Receptacle WELDING AREA	14
15	--	--	--	--		11095... 11095...		--	--	--	--	16
17	--	--	--	--			11095... 11095...	--	--	--	--	18
19	Receptacle WELDING AREA	1	50 A	3	11095... 0 VA			1	20 A	--	Spare	20
21	--	--	--	--		11095... 0 VA		1	20 A	--	Spare	22
23	--	--	--	--			11095... 0 VA	1	20 A	--	Spare	24
25	Spare	--	20 A	1	0 VA 0 VA			1	20 A	--	Spare	26
27	Spare	--	20 A	1		0 VA 0 VA		1	20 A	--	Spare	28
29	Spare	--	20 A	1			0 VA 0 VA	1	20 A	--	Spare	30
31	Spare	--	20 A	1	0 VA 0 VA			1	20 A	--	Spare	32
33	Spare	--	20 A	1		0 VA 0 VA		1	20 A	--	Spare	34
35	Spare	--	20 A	1			0 VA 0 VA	1	20 A	--	Spare	36
37	Provision	--	--	--	0 VA 0 VA			--	--	--	Provision	38
39	Provision	--	--	--		0 VA 0 VA		--	--	--	Provision	40
41	Provision	--	--	--			0 VA 0 VA	--	--	--	Provision	42
					Total... 77665 VA	77665 VA	77665 VA					
					Total... 280 A	280 A	280 A					

Legend:

Load Classification	Connected Load	Demand Factor	Estimated Demand	Panel Totals	
Receptacle	232995 VA	52.15%	121498 VA		
				Total Conn. Load:	232995 VA
				Total Est. Demand:	121498 VA
				Total Conn.:	280 A
				Total Est. Demand:	146 A

Notes:

Branch Panel: BDFP

SANTA ANA COLLEGE SCIENCE CENTER

Location: BDF SC109 | **Volts:** 120/208 Wye | **A.I.C. Rating:**
Supply From: | **Phases:** 3 | **Mains Type:**
Mounting: Surface | **Wires:** 4 | **Mains Rating:** 225 A
Isolated Ground Bus: | **MCB Rating:** 125 A

CKT	Circuit Description	Note	Quan	Trip	Pole	A	B	C	Pole	Trip	Quan	Note	Circuit Description	CKT
1	Receptacle BDF SC109	G	2	20 A	1	720 VA 1000...			1	20 A	1	G	SECURITY/ACCESS CONTROLS	2
3	Receptacle BDF SC109	G	2	20 A	1		720 VA 500 VA		1	20 A	1		Power EMERGENCY PHONE	4
5	Receptacle BDF SC109	G	2	20 A	1			720 VA 500 VA	1	20 A	1		Power EMERGENCY PHONE	6
7	*FACP	G	1	20 A	1	500 VA 180 VA			1	20 A	1	G	Receptacle RACKS BDF SC109	8
9	*FA AMPLIFIER	G	1	20 A	1		500 VA 180 VA		1	20 A	1	G	Receptacle RACKS BDF SC109	10
11	*FA POWER SUPPLY	G	1	20 A	1			500 VA 180 VA	1	20 A	1	G	Power BDF SC109	12
13	CLOCK	G	1	20 A	1	500 VA 180 VA			1	20 A	1	G	Power BDF SC109	14
15	Spare		--	20 A	1		0 VA 0 VA		1	20 A	--		Spare	16
17	Spare		--	20 A	1			0 VA 0 VA	1	20 A	--		Spare	18
19	IDF2/IDF3		--	100 A	3	3600... 0 VA			1	20 A	--		Spare	20
21	--		--	--	--		3600... 0 VA		1	20 A	--		Spare	22
23	--		--	--	--			3600... 0 VA	1	20 A	--		Spare	24
25	Provision		--	--	--	0 VA 0 VA			--	--	--		Provision	26
27	Provision		--	--	--		0 VA 0 VA		--	--	--		Provision	28
29	Provision		--	--	--			0 VA 0 VA	--	--	--		Provision	30
31	Provision		--	--	--	0 VA 0 VA			--	--	--		Provision	32
33	Provision		--	--	--		0 VA 0 VA		--	--	--		Provision	34
35	Provision		--	--	--			0 VA 0 VA	--	--	--		Provision	36
37	Provision		--	--	--	0 VA 0 VA			--	--	--		Provision	38
39	Provision		--	--	--		0 VA 0 VA		--	--	--		Provision	40
41	Provision		--	--	--			0 VA 0 VA	--	--	--		Provision	42
						Total Load: 6680 VA	5500 VA	5500 VA						
						Total Amps: 56 A	46 A	46 A						

Legend:

Load Classification	Connected Load	Demand Factor	Estimated Demand	Panel Totals	
Other	0 VA	0.00%	0 VA		
Power	12520 VA	100.00%	12520 VA	Total Conn. Load:	14680 VA
Receptacle	2160 VA	100.00%	2160 VA	Total Est. Demand:	14680 VA
				Total Conn.:	41 A
				Total Est. Demand:	41 A

Notes:
* INDICATE CIRCUIT BREAKER LOCK ON DEVICE, RED IN COLOR.

Branch Panel: 1PB2

SANTA ANA COLLEGE SCIENCE CENTER

Location: ELECTRICAL CLOSET SC114 | **Volts:** 120/208 Wye | **A.I.C. Rating:**
Supply From: PDBB | **Phases:** 3 | **Mains Type:**
Mounting: Surface | **Wires:** 4 | **Mains Rating:** 225 A
Lugs Only: No | **MCB Rating:** 225 A

CKT	Circuit Description	Qua n	Trip	Pole	A	B	C	Pole	Trip	Qua n	Circuit Description	CKT
1	Receptacle CORRIDOR SC100-1	5	20 A	1	900 VA 272 VA			1	20 A	1	Motor MACHINE ROOM SC107	2
3	Receptacle MACHINE ROOM SC107	5	20 A	1		900 VA 272 VA		1	20 A	1	Motor MACHINE ROOM SC107	4
5	Receptacle LARGE CLASSROOM SC111	3	20 A	1			540 VA 272 VA	1	20 A	1	Motor MACHINE ROOM SC107	6
7	Receptacle LARGE CLASSROOM SC111	4	20 A	1	720 VA 272 VA			1	20 A	1	Motor MACHINE ROOM SC107	8
9	Receptacle LARGE CLASSROOM SC111	3	20 A	1		540 VA 1500 VA		1	20 A	1	Power WOMEN'S RESTROOM SC104	10
11	Receptacle LARGE CLASSROOM SC111	3	20 A	1			540 VA 3000 VA	1	20 A	6	Power WOMEN'S RESTROOM SC104	12
13	Receptacle SCIENCE LEARNING CENTER...	4	20 A	1	2040 VA 1500 VA			1	20 A	1	Power MEN'S RESTROOM SC102	14
15	Receptacle SCIENCE LEARNING CENTER...	4	20 A	1		720 VA 3000 VA		1	20 A	6	Power MEN'S RESTROOM SC102	16
17	Receptacle SCIENCE LEARNING CENTER...	4	20 A	1			720 VA 2000 VA	1	20 A	2	Power LARGE CLASSROOM SC111	18
19	Receptacle SCIENCE LEARNING CENTER...	1	20 A	1	180 VA 1800 VA			1	20 A	1	Receptacle LARGE CLASSROOM SC111	20
21	Power SCIENCE LEARNING CENTER SC103	1	20 A	1		1000 VA 1800 VA		1	20 A	1	Receptacle CONFERENCE SC110-3	22
23	Power SCIENCE LEARNING CENTER SC103	1	20 A	1			1000 VA 2000 VA	1	20 A	2	Power CONFERENCE SC110-3	24
25	Power SCIENCE LEARNING CENTER SC103	1	20 A	1	1000 VA 1000 VA			1	20 A	1	Power CONFERENCE SC110-3	26
27	Provision		--	--		0 VA		1	20 A	--	Spare	28
29	Power Room SC100-1, SC118	3	20 A	1			3000 VA 0 VA	1	20 A	--	Spare	30
31	Power SCIENCE LEARNING CENTER SC103	4	20 A	1	1660 VA 0 VA			1	20 A	--	Spare	32
33	Spare	--	20 A	1		0 VA 0 VA		1	20 A	--	Spare	34
35	Spare	--	20 A	1			0 VA 0 VA	1	20 A	--	Spare	36
37	Provision	--	--	--	0 VA 0 VA			--	--	--	Provision	38
39	Provision	--	--	--		0 VA 0 VA		--	--	--	Provision	40
41	Provision	--	--	--			0 VA 0 VA	--	--	--	Provision	42
					Total... 11344 VA	9732 VA	13072 VA					
					Total... 97 A	81 A	111 A					

Legend:

Load Classification	Connected Load	Demand Factor	Estimated Demand	Panel Totals	
Motor	1088 VA	100.00%	1088 VA		
Power	21000 VA	100.00%	21000 VA	Total Conn. Load:	34148 VA
Receptacle	12060 VA	91.46%	11030 VA	Total Est. Demand:	33118 VA
				Total Conn.:	95 A
				Total Est. Demand:	92 A

Notes:

Branch Panel: IDF2P

SANTA ANA COLLEGE SCIENCE CENTER

Location: IDF SC211 | **Volts:** 120/208 Wye | **A.I.C. Rating:**
Supply From: | **Phases:** 3 | **Mains Type:**
Mounting: Surface | **Wires:** 4 | **Mains Rating:** 70 A
Lugs Only:

CKT	Circuit Description	Quan	Trip	Pole	A	B	C	Pole	Trip	Quan	Circuit Description	CKT
1	Receptacle IDF SC211	3	20 A	1	1080... 500 VA			1	20 A	1	SECURITY/ACCESS CONTROLS	2
3	Receptacle IDF SC211	2	20 A	1		720 VA 1000...		1	20 A	1	*FA POWER SUPPLY	4
5	Receptacles Racks IDF SC211	1	20 A	1			0 VA 1000...	1	20 A	1	FA AMPLIFIER	6
7	Receptacles Racks IDF SC211	1	20 A	1	0 VA 0 VA			1	20 A	--	Spare	8
9	Receptacles Racks IDF SC211	1	20 A	1		0 VA 0 VA		1	20 A	--	Spare	10
11	Spare	--	20 A	1			0 VA 0 VA	1	20 A	--	Spare	12
13	Spare	--	20 A	1	0 VA 0 VA			1	20 A	--	Spare	14
15	Spare	--	20 A	1		0 VA 0 VA		1	20 A	--	Spare	16
17	Spare	--	20 A	1			0 VA 0 VA	1	20 A	--	Spare	18
19	Provision	--	--	--	0 VA 0 VA			--	--	--	Provision	20
21	Provision	--	--	--		0 VA 0 VA		--	--	--	Provision	22
23	Provision	--	--	--			0 VA 0 VA	--	--	--	Provision	24
25	Provision	--	--	--	0 VA 0 VA			--	--	--	Provision	26
27	Provision	--	--	--		0 VA 0 VA		--	--	--	Provision	28
29	Provision	--	--	--			0 VA 0 VA	--	--	--	Provision	30
					Total Load: 1580 VA	1720 VA	1000 VA					
					Total Amps: 14 A	15 A	8 A					

Legend:

Load Classification	Connected Load	Demand Factor	Estimated Demand	Panel Totals	
Power	0 VA	0.00%	0 VA		
Receptacle	1800 VA	100.00%	1800 VA	Total Conn. Load:	1800 VA
				Total Est. Demand:	1800 VA
				Total Conn.:	5 A
				Total Est. Demand:	5 A

Notes:
* PROVIDE CIRCUIT BREAKER LOCK ON DEVICE, RED IN COLOR.

Branch Panel: IDF3P

SANTA ANA COLLEGE SCIENCE CENTER

Location: IDF SC307 | **Volts:** 120/208 Wye | **A.I.C. Rating:**
Supply From: | **Phases:** 3 | **Mains Type:**
Mounting: Surface | **Wires:** 4 | **Mains Rating:** 50 A
Lugs Only:

CKT	Circuit Description	Quan	Trip	Pole	A	B	C	Pole	Trip	Quan	Circuit Description	CKT
1	Receptacle IDF SC307	2	20 A	1	720 VA 1000...			1	20 A	1	FIRE ALARM TERMINAL CABINET	2
3	Receptacle IDF SC307	1	20 A	1		360 VA 500 VA		1	20 A	1	SECURITY/ACCESS CONTROLS	4
5	Receptacle IDF SC307	2	20 A	1			720 VA 1000...	1	20 A	1	FA AMPLIFIER	6
7	Receptacle IDF SC307	2	20 A	1	720 VA 0 VA			1	20 A	--	Spare	8
9	Receptacles Racks IDF SC307	1	20 A	1		0 VA 0 VA		1	20 A	--	Spare	10
11	Receptacles Racks IDF SC307	1	20 A	1			0 VA 0 VA	1	20 A	--	Spare	12
13	Receptacles Racks IDF SC307	1	20 A	1	0 VA 0 VA			1	20 A	--	Spare	14
15	Spare	--	20 A	1		0 VA 0 VA		1	20 A	--	Spare	16
17	Spare	--	20 A	1			0 VA 0 VA	1	20 A	--	Spare	18
19	Spare	--	20 A	1	0 VA 0 VA			--	--	--	Provision	20
21	Spare	--	20 A	1		0 VA 0 VA		--	--	--	Provision	22
23	Spare	--	20 A	1			0 VA 0 VA	--	--	--	Provision	24
25	Provision	--	--	--	0 VA 0 VA			--	--	--	Provision	26
27	Provision	--	--	--		0 VA 0 VA		--	--	--	Provision	28
29	Provision	--	--	--			0 VA 0 VA	--	--	--	Provision	30
					Total Load: 2440 VA	860 VA	1720 VA					
					Total Amps: 21 A	7 A	15 A					

Legend:

Load Classification	Connected Load	Demand Factor	Estimated Demand	Panel Totals	
Power	0 VA	0.00%	0 VA		
Receptacle	2520 VA	100.00%	2520 VA	Total Conn. Load:	2520 VA
				Total Est. Demand:	2520 VA
				Total Conn.:	7 A
				Total Est. Demand:	7 A

Notes:
PROVIDE CIRCUIT BREAKER LOCK ON DEVICE RED IN COLOR.

hga.
1918 Main Street,Third Floor
Santa Monica , California 90405
Telephone 310.557.7600

STRUCTURAL ENGINEER
SAIFUL BOUQUET
155 N LAKE AVE
PASADENA, CA 91101
626-304-2616

MECHANICAL & PLUMBING ENGINEER
STANTEC CONSULTING INC
14130 RIVERSIDE DR. # 201
SHERMAN OAKS, CA 91423
818-377-8220

ELECTRICAL ENGINEER
FBA ENGINEERING
150 PAULARINO AVE. #A120
COSTA MESA, CA 92626
949-852-9995

CIVIL ENGINEER
KPFF CONSULTING ENGINEERS
700 SOUTH FLOWER ST. #2100
LOS ANGELES, CA 90017
213-418-0201

LANDSCAPE ARCHITECT
LYNN CAPOUYA, INC.
17992 MITCHELL SOUTH, #110
IRVINE, CA 92614
949-756-0150

LABORATORY CONSULTANT
RESEARCH FACILITIES DESIGN
3965 FIFTH AVE. #400
SAN DIEGO, CA 92103
619-297-0159

SCIENCE CENTER
SANTA ANA COLLEGE
RANCHO SANTIAGO COMMUNITY COLLEGE DISTRICT

1530 W. 17TH ST.
SANTA ANA, CA 92706

SANTA ANA COLLEGE

I HEREBY CERTIFY THAT THIS PLAN, SPECIFICATION OR REPORT WAS PREPARED BY ME OR UNDER MY DIRECT SUPERVISION AND THAT I AM A DULY LICENSED ARCHITECT UNDER THE LAWS OF THE STATE OF

NAME: JAMES G. MATSON
DATE: MAY 16, 2017
REGISTRATION NUMBER: C13036

NO	DESCRIPTION	DATE
2	ADDENDUM 2	9/1/17

ISSUANCE HISTORY - THIS SHEET

DRAWN BY: FBA | REVIEW BY: R. Rogers

HGA NO: 3584-001-00

LEVEL 01 PANEL SCHEDULES

DATE: JULY 06, 2017

E0.7

ADDENDA PACKAGE

© COPYRIGHT HAMMEL, GREEN AND ABRAHAMSON, INC.

C:\Users\Scanner\Desktop\REVIT PROJECTS\SAC SCIENCE CENTER\SAC_ScienceCenter_E_19_Local.rvt
8/30/2017 5:34:17 PM
FBA

Branch Panel: EQPD1

SANTA ANA COLLEGE SCIENCE CENTER

Location: EMERGENCY ELECTRICAL... **Volts:** 120/208 Wye **A.I.C. Rating:**
Supply From: ET-EQ **Phases:** 3 **Mains Type:**
Mounting: **Wires:** 4 **Mains Rating:** 400 A
Lugs Only: **MCB Rating:** 300 A

CKT	Circuit Description	Quan	Trip	Pole	A		B		C		Pole	Trip	Quan	Circuit Description	CKT
1	FCU 1-1 & FCU 1-2	2	20 A	2	300 VA	600 VA					2	20 A	2	FCU 2-1 & FCU 3-2	2
3	--	--	--	--			300 VA	600 VA			--	--	--	--	4
5	Spare	--	20 A	1					0 VA	180 VA	1	20 A	1	Receptacle EMERGENCY ELECTRICAL SC126	6
7	UPS	1	12...	3	10000...	0 VA					3	20 A	1	EQP3B	8
9	--	--	--	--			10000...	0 VA			--	--	--	--	10
11	--	--	--	--					10000...	0 VA	--	--	--	--	12
13	EQL2	1	20 A	3	0 VA	6000 VA					3	60 A	1	ELM3	14
15	--	--	--	--			0 VA	6000 VA			--	--	--	--	16
17	--	--	--	--					0 VA	6000 VA	--	--	--	--	18
19	Spare	--	20 A	1	0 VA	0 VA					1	20 A	--	Spare	20
21	Spare	--	20 A	1			0 VA	0 VA			1	20 A	--	Spare	22
23	Spare	--	20 A	1					0 VA	0 VA	1	20 A	--	Spare	24
25	Spare	--	20 A	1	0 VA	0 VA					1	20 A	--	Spare	26
27	Spare	--	20 A	1			0 VA	0 VA			1	20 A	--	Spare	28
29	Spare	--	20 A	1					0 VA	0 VA	1	20 A	--	Spare	30
31	Spare	--	20 A	1	0 VA	0 VA					1	20 A	--	Spare	32
33	Spare	--	20 A	1			0 VA	0 VA			1	20 A	--	Spare	34
35	Spare	--	20 A	1					0 VA	0 VA	1	20 A	--	Spare	36
37	Provision	--	--	--	0 VA	0 VA					--	--	--	Provision	38
39	Provision	--	--	--			0 VA	0 VA			--	--	--	Provision	40
41	Provision	--	--	--					0 VA	0 VA	--	--	--	Provision	42
				Total...	16900 VA		16900 VA		16180 VA						
				Total...	142 A		142 A		135 A						

Legend:

Load Classification	Connected Load	Demand Factor	Estimated Demand	Panel Totals	
Power	19200 VA	100.00%	19200 VA		
Receptacle	180 VA	100.00%	180 VA	Total Conn. Load:	19380 VA
				Total Est. Demand:	19380 VA
				Total Conn.:	54 A
				Total Est. Demand:	54 A

Notes:

Branch Panel: E1LHA

SANTA ANA COLLEGE SCIENCE CENTER

Location: EMERGENCY ELECTRICAL... **Volts:** 480/277 Wye **A.I.C. Rating:**
Supply From: EHLS **Phases:** 3 **Mains Type:**
Mounting: Surface **Wires:** 4 **Mains Rating:** 225 A
Lugs Only: No **MCB Rating:** 225 A

CKT	Circuit Description	Quan	Trip	Pole	A		B		C		Pole	Trip	Quan	Circuit Description	CKT
1	Lighting Room SC100, SC100-1, SC105	22	20 A	1	520 VA	192 VA					1	20 A	12	Lighting Exterior Downlights	2
3	Lighting SC126, SC128, SC132, SC134, SC113-...	21	20 A	1			1787 VA	457 VA			1	20 A	18	Lighting CORRIDOR SC300	4
5	Lighting Room SC122, SC120, SC118, SC111,...	30	20 A	1					3255 VA	3131 VA	1	20 A	30	Lighting ORGANIC CHEMISTRY LAB SC320	6
7	Lighting Room SC215, SC217-1, SC218, SC220,...	28	20 A	1	2918 VA	2403 VA					1	20 A	28	Lighting CHEMISTRY LAB SC316	8
9	Lighting MOLECULAR BIOLOGY PREP &...	23	20 A	1			2120 VA	644 VA			1	20 A	23	Lighting STAIR #1 LIGHTING	10
11	Lighting CORRIDOR SC200	26	20 A	1					1017 VA	0 VA	1	20 A	6	Lighting OPEN OFFICE SC110-1	12
13	Lighting EXTERIOR LIGHTING	4	20 A	1	600 VA	0 VA					1	20 A	--	Spare	14
15	Lighting EXTERIOR LIGHTING	5	20 A	1			750 VA	0 VA			1	20 A	--	Spare	16
17	Lighting EXTERIOR LIGHTING	3	20 A	1					150 VA	0 VA	1	20 A	--	Spare	18
19	Lighting EXTERIOR LIGHTING	4	20 A	1	600 VA	0 VA					1	20 A	--	Spare	20
21	Lighting EXTERIOR LIGHTING	1	20 A	1			150 VA	0 VA			1	20 A	--	Spare	22
23	Spare	--	20 A	1					0 VA	0 VA	1	20 A	--	Spare	24
25	Spare	--	20 A	1	0 VA	0 VA					1	20 A	--	Spare	26
27	Spare	--	20 A	1			0 VA	0 VA			1	20 A	--	Spare	28
29	Spare	--	20 A	1					0 VA	0 VA	1	20 A	--	Spare	30
31	Spare	--	20 A	1	0 VA	0 VA					1	20 A	--	Spare	32
33	Spare	--	20 A	1			0 VA	0 VA			1	20 A	--	Spare	34
35	Spare	--	20 A	1					0 VA	0 VA	1	20 A	--	Spare	36
37	Provision	--	--	--	0 VA	0 VA					--	--	--	Provision	38
39	Provision	--	--	--			0 VA	0 VA			--	--	--	Provision	40
41	Provision	--	--	--					0 VA	0 VA	--	--	--	Provision	42
				Total...	7233 VA		5908 VA		7554 VA						
				Total...	27 A		21 A		28 A						

Legend:

Load Classification	Connected Load	Demand Factor	Estimated Demand	Panel Totals	
Lighting	20914 VA	100.00%	20914 VA		
				Total Conn. Load:	20914 VA
				Total Est. Demand:	20914 VA
				Total Conn.:	25 A
				Total Est. Demand:	25 A

Notes:

Branch Panel: EPLS

SANTA ANA COLLEGE SCIENCE CENTER

Location: EMERGENCY ELECTRICAL... **Volts:** 120/208 Wye **A.I.C. Rating:**
Supply From: ET-LS **Phases:** 3 **Mains Type:**
Mounting: Surface **Wires:** 4 **Mains Rating:** 225 A
Lugs Only: **MCB Rating:** 175 A

CKT	Circuit Description	Quan	Trip	Pole	A		B		C		Pole	Trip	Quan	Circuit Description	CKT
1	Receptacle BDF SC109	1	20 A	1	500 VA	4200 VA					3	70 A	1	CPP	2
3	Receptacle IDF SC211	1	20 A	1			500 VA	4200 VA			--	--	--	--	4
5	Receptacle IDF SC307	1	20 A	1					500 VA	4200 VA	--	--	--	--	6
7	Spare	--	20 A	1	0 VA	452 VA					3	40 A	1	EPG	8
9	Spare	--	20 A	1			0 VA	75 VA			--	--	--	--	10
11	Spare	--	20 A	1					0 VA	360 VA	--	--	--	--	12
13	Spare	--	20 A	1	0 VA	0 VA					1	20 A	--	Spare	14
15	Spare	--	20 A	1			0 VA	0 VA			1	20 A	--	Spare	16
17	Spare	--	20 A	1					0 VA	0 VA	1	20 A	--	Spare	18
19	Spare	--	20 A	1	0 VA	0 VA					1	20 A	--	Spare	20
21	Spare	--	20 A	1			0 VA	0 VA			1	20 A	--	Spare	22
23	Spare	--	20 A	1					0 VA	0 VA	1	20 A	--	Spare	24
25	Spare	--	20 A	1	0 VA	0 VA					1	20 A	--	Spare	26
27	Spare	--	20 A	1			0 VA	0 VA			1	20 A	--	Spare	28
29	Spare	--	20 A	1					0 VA	0 VA	1	20 A	--	Spare	30
31	Spare	--	20 A	1	0 VA	0 VA					1	20 A	--	Spare	32
33	Spare	--	20 A	1			0 VA	0 VA			1	20 A	--	Spare	34
35	Spare	--	20 A	1					0 VA	0 VA	1	20 A	--	Spare	36
37	Spare	--	20 A	1	0 VA	0 VA					1	20 A	--	Spare	38
39	Spare	--	20 A	1			0 VA	0 VA			1	20 A	--	Spare	40
41	Spare	--	20 A	1					0 VA	0 VA	1	20 A	--	Spare	42
				Total...	5152 VA		4775 VA		5060 VA						
				Total...	43 A		40 A		43 A						

Legend:

Load Classification	Connected Load	Demand Factor	Estimated Demand	Panel Totals	
Lighting	175 VA	100.00%	175 VA		
Power	12600 VA	100.00%	12600 VA	Total Conn. Load:	14995 VA
Receptacle	2220 VA	100.00%	2220 VA	Total Est. Demand:	14995 VA
				Total Conn.:	42 A
				Total Est. Demand:	42 A

Notes:

Branch Panel: EHLS

SANTA ANA COLLEGE SCIENCE CENTER

Location: EMERGENCY ELECTRICAL... **Volts:** 480/277 Wye **A.I.C. Rating:**
Supply From: ATS-LS **Phases:** 3 **Mains Type:**
Mounting: Surface **Wires:** 4 **Mains Rating:** 150 A
Lugs Only: **MCB Rating:**

CKT	Circuit Description	Quan	Trip	Pole	A		B		C		Pole	Trip	Quan	Circuit Description	CKT
1	E1LHA	1	20 A	3	7233 VA	5150 VA					3	20 A	1	ET-LS	2
3	--	--	--	--			5897 VA	4768 VA			--	--	--	--	4
5	--	--	--	--					7554 VA	5060 VA	--	--	--	--	6
7															8
9															10
11															12
13															14
15															16
17															18
19															20
21															22
23															24
25															26
27															28
29															30
31															32
33															34
35															36
37															38
39															40
41															42
				Total...	12384 VA		10664 VA		12614 VA						
				Total...	46 A		38 A		46 A						

Legend:

Load Classification	Connected Load	Demand Factor	Estimated Demand	Panel Totals	
Lighting	21089 VA	100.00%	21089 VA		
Power	12600 VA	100.00%	12600 VA	Total Conn. Load:	35909 VA
Receptacle	2220 VA	100.00%	2220 VA	Total Est. Demand:	35909 VA
				Total Conn.:	43 A
				Total Est. Demand:	43 A

Notes:

Branch Panel: LMW1

SANTA ANA COLLEGE SCIENCE CENTER

Location: MECHANICAL ROOM SC128 **Volts:** 120/208 Wye **A.I.C. Rating:**
Supply From: PDBA **Phases:** 3 **Mains Type:**
Mounting: Surface **Wires:** 4 **Mains Rating:** 225 A
Lugs Only: Yes **MCB Rating:** 225 A

CKT	Circuit Description	Quan	Trip	Pole	A		B		C		Pole	Trip	Quan	Circuit Description	CKT
1	B-1	1	20 A	2	1200 VA	1600 VA					1	20 A	1	EF-5 (3/4 HP)	2
3	--	--	--	--			1200 VA	1000 VA			2	20 A	1	FCU-1-4	4
5	B-2	1	20 A	2					1200 VA	1000 VA	--	--	--	--	6
7	--	--	--	--	1200 VA	1000 VA					2	20 A	1	FCU-1-3	8
9	B-3	1	20 A	2			1200 VA	1000 VA			--	--	--	--	10
11	--	--	--	--					1200 VA	1200 VA	1	20 A	1	CRP-1	12
13	FPTU-1	1	20 A	1	1000 VA	1200 VA					1	20 A	1	CRP-2	14
15	FPTU-2	1	20 A	1			1000 VA	1200 VA			1	20 A	1	CRP-3	16
17	FPTU-3	1	20 A	1					1000 VA	1200 VA	1	20 A	1	CRP-4	18
19	CDP-1 (1/5 HP)	1	20 A	1	1600 VA	0 VA					1	20 A	--	Spare	20
21	CDP-1	3	20 A	1			1600 VA	0 VA			1	20 A	--	Spare	22
23	Spare	--	20 A	1					0 VA	0 VA	1	20 A	--	Spare	24
25	Spare	--	20 A	1	0 VA	0 VA					1	20 A	--	Spare	26
27	Spare	--	20 A	1			0 VA	0 VA			1	20 A	--	Spare	28
29	Spare	--	20 A	1					0 VA	0 VA	1	20 A	--	Spare	30
31	Spare	--	20 A	1	0 VA	0 VA					1	20 A	--	Spare	32
33	Spare	--	20 A	1			0 VA	0 VA			1	20 A	--	Spare	34
35	Spare	--	20 A	1					0 VA	0 VA	1	20 A	--	Spare	36
37	Spare	--	20 A	1	0 VA	0 VA					1	20 A	--	Spare	38
39	Spare	--	20 A	1			0 VA	0 VA			1	20 A	--	Spare	40
41	Spare	--	20 A	1					0 VA	0 VA	1	20 A	--	Spare	42
				Total...	8800 VA		8200 VA		6800 VA						
				Total...	75 A		70 A		57 A						

Legend:

Load Classification	Connected Load	Demand Factor	Estimated Demand	Panel Totals	
Lighting	4800 VA	100.00%	4800 VA		
Power	12800 VA	100.00%	12800 VA	Total Conn. Load:	17600 VA
				Total Est. Demand:	17600 VA
				Total Conn.:	49 A
				Total Est. Demand:	49 A

Notes:

Branch Panel: CPP

SANTA ANA COLLEGE SCIENCE CENTER

Location: GENERATOR S1 **Volts:** 120/208 Wye **A.I.C. Rating:**
Supply From: EPLS **Phases:** 3 **Mains Type:**
Mounting: Surface **Wires:** 4 **Mains Rating:** 225 A
Lugs Only: **MCB Rating:**

CKT	Circuit Description	Quan	Trip	Pole	A		B		C		Pole	Trip	Quan	Circuit Description	CKT
1	Power	1	20 A	3	4200 VA										2
3	--	--	--	--			4200 VA								4
5	--	--	--	--					4200 VA						6
7															8
9															10
11															12
13															14
15															16
17															18
19															20
21															22
23															24
25															26
27															28
29															30
31															32
33															34
35															36
37															38
39															40
41															42
				Total...	4200 VA		4200 VA		4200 VA						
				Total...	35 A		35 A		35 A						

Legend:

Load Classification	Connected Load	Demand Factor	Estimated Demand	Panel Totals	
Power	12600 VA	100.00%	12600 VA		
				Total Conn. Load:	12600 VA
				Total Est. Demand:	12600 VA
				Total Conn.:	35 A
				Total Est. Demand:	35 A

Notes:

Branch Panel: EPG

SANTA ANA COLLEGE SCIENCE CENTER

Location: GENERATOR S1 **Volts:** 120/208 Wye **A.I.C. Rating:**
Supply From: EPLS **Phases:** 3 **Mains Type:**
Mounting: Surface **Wires:** 4 **Mains Rating:** 225 A
Lugs Only: Yes **MCB Rating:** 225 A

CKT	Circuit Description	Quan	Trip	Pole	A		B		C		Pole	Trip	Quan	Circuit Description	CKT
1	Lighting ELECTRICAL ENCLOSURE	4	20 A	1	100 VA										2
3	Lighting ELECTRICAL ENCLOSURE	3	20 A	1			75 VA								4
5	Receptacle ELETRICAL ENCLOSURE	2	20 A	1					360 VA						6
7	Receptacle ELECTRICAL ENCLOSURE	2	20 A	1	360 VA	0 VA					1	20 A	--	Spare	8
9	Spare	--	20 A	1			0 VA	0 VA			1	20 A	--	Spare	10
11	Spare	--	20 A	1					0 VA	0 VA	1	20 A	--	Spare	12
13	Spare	--	20 A	1	0 VA	0 VA					1	20 A	--	Spare	14
15	Spare	--	20 A	1			0 VA	0 VA			1	20 A	--	Spare	16
17	Spare	--	20 A	1					0 VA	0 VA	1	20 A	--	Spare	18
19	Spare	--	20 A	1	0 VA	0 VA					1	20 A	--	Spare	20
21	Spare	--	20 A	1			0 VA	0 VA			1	20 A	--	Spare	22
23	Spare	--	20 A	1					0 VA	0 VA	1	20 A	--	Spare	24
25	Spare	--	20 A	1	0 VA	0 VA					1	20 A	--	Spare	26
27	Spare	--	20 A	1			0 VA	0 VA			1	20 A	--	Spare	28
29	Spare	--	20 A	1					0 VA	0 VA	1	20 A	--	Spare	30
31	Spare	--	20 A	1	0 VA	0 VA					1	20 A	--	Spare	32
33	Spare	--	20 A	1			0 VA	0 VA			1	20 A	--	Spare	34
35	Spare	--	20 A	1					0 VA	0 VA	1	20 A	--	Spare	36
37	Spare	--	20 A	1	0 VA	0 VA					1	20 A	--	Spare	38
39	Spare	--	20 A	1			0 VA	0 VA			1	20 A	--	Spare	40
41	Spare	--	20 A	1					0 VA	0 VA	1	20 A	--	Spare	42
				Total...	460 VA		75 VA		360 VA						
				Total...	4 A		1 A		3 A						

Legend:

Load Classification	Connected Load	Demand Factor	Estimated Demand	Panel Totals	
Lighting	175 VA	100.00%	175 VA		
Receptacle	720 VA	100.00%	720 VA	Total Conn. Load:	895 VA
				Total Est. Demand:	895 VA
				Total Conn.:	2 A
				Total Est. Demand:	2 A

Notes:

1918 Main Street, Third Floor
Santa Monica, California 90405
Telephone 310.557.7600

STRUCTURAL ENGINEER
SAIFUL BOUQUET
155 N LAKE AVE
PASADENA, CA 91101
626-304-2616

MECHANICAL & PLUMBING ENGINEER
STANTEC CONSULTING INC
14130 RIVERSIDE DR. # 201
SHERMAN OAKS, CA 91423
818-377-8220

ELECTRICAL ENGINEER
FBA ENGINEERING
150 PAULARINO AVE. #A120
COSTA MESA, CA 92626
949-852-9995

CIVIL ENGINEER
KPFF CONSULTING ENGINEERS
700 SOUTH FLOWER ST. #2100
LOS ANGELES, CA 90017
213-418-0201

LANDSCAPE ARCHITECT
LYNN CAPOUYA, INC.
17992 MITCHELL SOUTH, #110
IRVINE, CA 92614
949-756-0150

LABORATORY CONSULTANT
RESEARCH FACILITIES DESIGN
3965 FIFTH AVE. #400
SAN DIEGO, CA 92103
619-297-0159

SCIENCE CENTER
SANTA ANA COLLEGE
RANCHO SANTIAGO COMMUNITY COLLEGE DISTRICT
1530 W. 17TH ST.
SANTA ANA, CA 92706

SANTA ANA COLLEGE

I HEREBY CERTIFY THAT THIS PLAN, SPECIFICATION OR REPORT WAS PREPARED BY ME OR UNDER MY DIRECT SUPERVISION AND THAT I AM A DULY LICENSED ARCHITECT UNDER THE LAWS OF THE STATE OF CA

NAME: JAMES G. MATSON
DATE: MAY 16, 2017
REGISTRATION NUMBER: C13036

NO	DESCRIPTION	DATE
2	ADDENDUM 2	9/1/17

ISSUANCE HISTORY - THIS SHEET
DRAWN BY: FBA REVIEW BY: R. Rogers

HGA NO: 3584-001-00

LEVEL 01 PANEL SCHEDULES

DATE: JULY 06, 2017

E0.7A

ADDENDA PACKAGE

© COPYRIGHT HAMMEL, GREEN AND ABRAHAMSON, INC.

C:\Users\JGomez\Desktop\REVIT PROJECTS\SAC SCIENCE CENTER\SAC_Science Center_E_16_Local.rvt
8/30/2017 5:34:20 PM
FBA

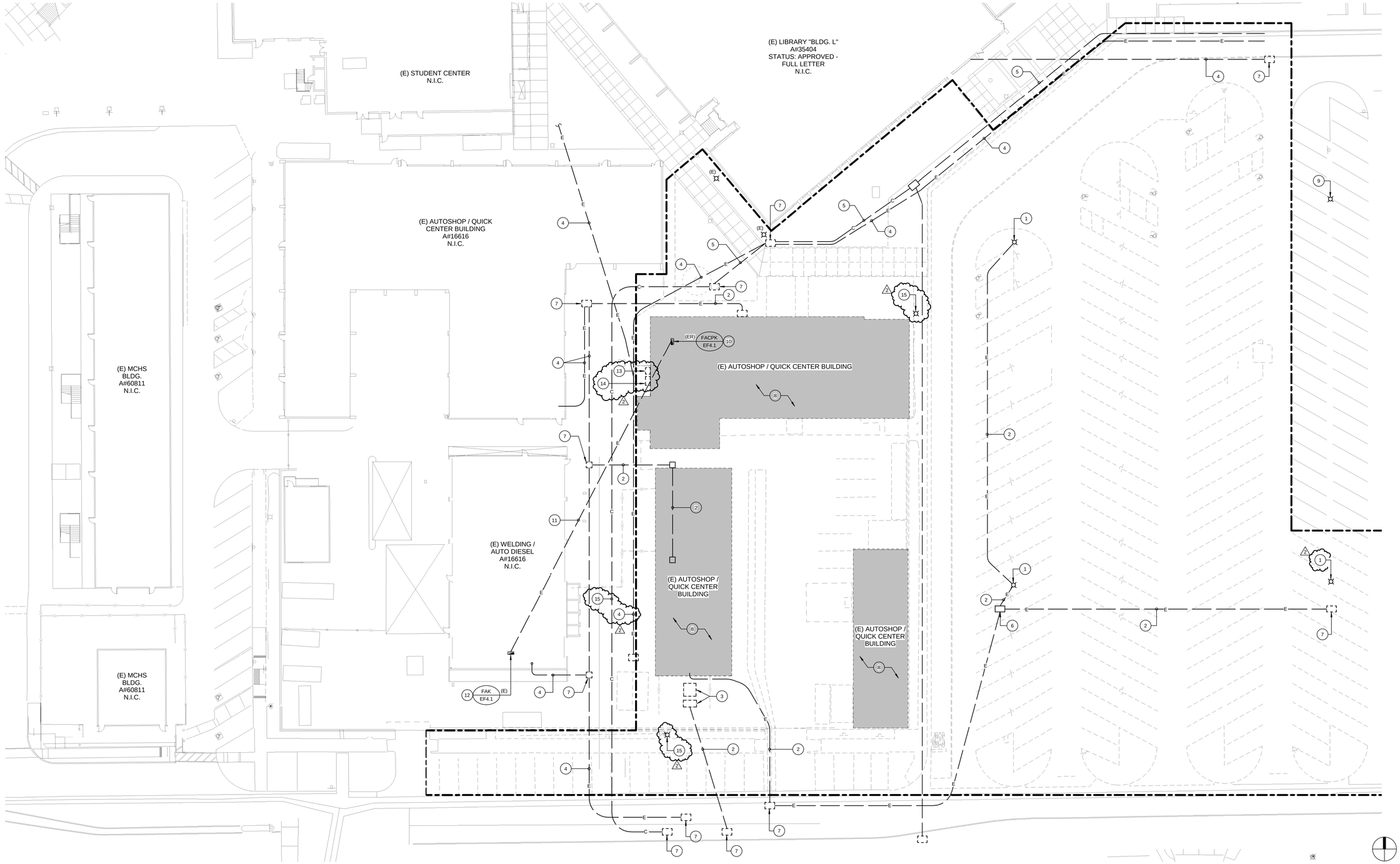

1 SITE ELECTRICAL DEMOLITION PLAN
1" = 20'-0"

LEGEND:

E —— EXISTING UNDERGROUND CONDUIT AND CABLING

C —— EXISTING UNDERGROUND COMMUNICATIONS

10 EXISTING FIRE ALARM CONTROL PANEL CURRENTLY SERVING EXISTING WELDING/AUTO DIESEL BUILDING TO BE RELOCATED TO WELDING/AUTO DIESEL BUILDING. WALL MOUNTED ADJACENT TO EXISTING FIRE ALARM POWER SUPPLY "FAK" AND CONNECT AS REQUIRED FOR A COMPLETE AND OPERABLE SYSTEM.

11 REMOVE EXISTING FIRE ALARM CABLING IN EXISTING CONDUIT TO SOURCE. CUT BACK EXISTING UNDERGROUND CONDUITS TO NEAREST EXISTING J-BOX OR PULLBOX TO REMAIN AND ABANDON.

12 EXISTING FIRE ALARM POWER SUPPLY TO REMAIN.

13 EXISTING 5KV LOAD INTERRUPTER SWITCH. PROTECT IN PLACE.

14 EXISTING 5KV OIL SWITCH #9 TO REMAIN. PROTECT IN PLACE.

15 DISCONNECT AND REMOVE EXISTING WALKWAY LIGHT AND POLE. DEMOLISH CONCRETE BASE AND ASSOCIATED FOUNDATIONS. MAINTAIN CONTINUITY OF EXISTING CIRCUIT.

PLAN NOTES:

1 DISCONNECT AND REMOVE EXISTING PARKING LOT LIGHT AND POLE. DEMOLISH CONCRETE BASE AND ASSOCIATED FOUNDATIONS.

2 DISCONNECT AND REMOVE EXISTING UNDERGROUND ELECTRICAL CONDUCTORS SHALL BE PULLED BACK TO SOURCE. CUT BACK EXISTING UNDERGROUND CONDUITS TO NEAREST EXISTING J-BOX OR PULLBOX TO REMAIN AND ABANDON.

3 DISCONNECT AND REMOVE EXISTING CAMPUS MAIN SERVICE ENTRANCE SWITCHBOARD AND UTILITY COMPANY TRANSFORMER. DEMOLISH THE UNDERGROUND SECTION AND FOUNDATIONS.

4 EXISTING UNDERGROUND ELECTRICAL. PROTECT IN PLACE.

5 EXISTING UNDERGROUND COMMUNICATIONS. PROTECT IN PLACE.

6 REMOVE EXISTING VAULT.

7 EXISTING VAULT. PROTECT IN PLACE.

8 DISCONNECT AND REMOVE ALL EXISTING ELECTRICAL AND TELECOMMUNICATIONS SYSTEMS FROM BUILDING TO BE DEMOLISHED. ALL ELECTRIAL EQUIPMENT, ETC. DEEMED SALVAGEABLE BY THE DISTRICT SHALL BE RETURNED TO THE DISTRICT AND DEPOSITED AT A LOCATION AS DIRECTED BY THE DISTRICT.

9 EXISTING PARKING LOT LIGHTING POLE AND CONCRETE BASE TO REMAIN. PROTECT IN PLACE.

1918 Main Street, Third Floor
Santa Monica, California 90405
Telephone 310.557.7600

STRUCTURAL ENGINEER
SAIFUL BOUQUET
155 N LAKE AVE
PASADENA, CA 91101
626-304-2616

MECHANICAL & PLUMBING ENGINEER
STANTEC CONSULTING INC
14130 RIVERSIDE DR. # 201
SHERMAN OAKS, CA 91423
818-377-8220

ELECTRICAL ENGINEER
FBA ENGINEERING
150 PAULARINO AVE. #A120
COSTA MESA, CA 92626
949-852-9995

CIVIL ENGINEER
KPFF CONSULTING ENGINEERS
700 SOUTH FLOWER ST. #2100
LOS ANGELES, CA 90017
213-418-0201

LANDSCAPE ARCHITECT
LYNN CAPOUYA, INC.
17992 MITCHELL SOUTH, #110
IRVINE, CA 92614
949-756-0150

LABORATORY CONSULTANT
RESEARCH FACILITIES DESIGN
3965 FIFTH AVE. #400
SAN DIEGO, CA 92103
619-297-0159

SCIENCE CENTER
SANTA ANA COLLEGE

RANCHO SANTIAGO COMMUNITY COLLEGE DISTRICT

1530 W. 17TH ST.
SANTA ANA, CA 92706

SANTA ANA COLLEGE

I HEREBY CERTIFY THAT THIS PLAN, SPECIFICATION OR REPORT WAS PREPARED BY ME OR UNDER MY DIRECT SUPERVISION AND THAT I AM A DULY LICENSED ARCHITECT UNDER THE LAWS OF THE STATE OF CA.

LICENSED ARCHITECT JAMES G. MATSON No. 36036 — EXPIRATION: SEPTEMBER 30, 2017 — STATE OF CALIFORNIA

REGISTERED PROFESSIONAL ENGINEER JAMES G. MATSON No. C13036 — EXPIRATION: 06-30-18 — ELECTRICAL — STATE OF CALIFORNIA

NAME: JAMES G. MATSON
DATE: MAY 16, 2017
REGISTRATION NUMBER: C13036

NO	DESCRIPTION	DATE
2	ADDENDUM 2	9/1/17

ISSUANCE HISTORY - THIS SHEET

DRAWN BY: FBA | REVIEW BY: R. Rogers

HGA NO: 3584-001-00

SITE ELECTRICAL DEMOLITION PLAN

DATE: JULY 06, 2017

E1.0

ADDENDA PACKAGE

© COPYRIGHT HAMMEL, GREEN AND ABRAHAMSON, INC.

FBA 8/30/2017 5:36:40 PM C:\Users\Sonya\Desktop\REVIT PROJECTS\SAC SCIENCE CENTER\SAC_Science Center_E_18_Use4.rvt

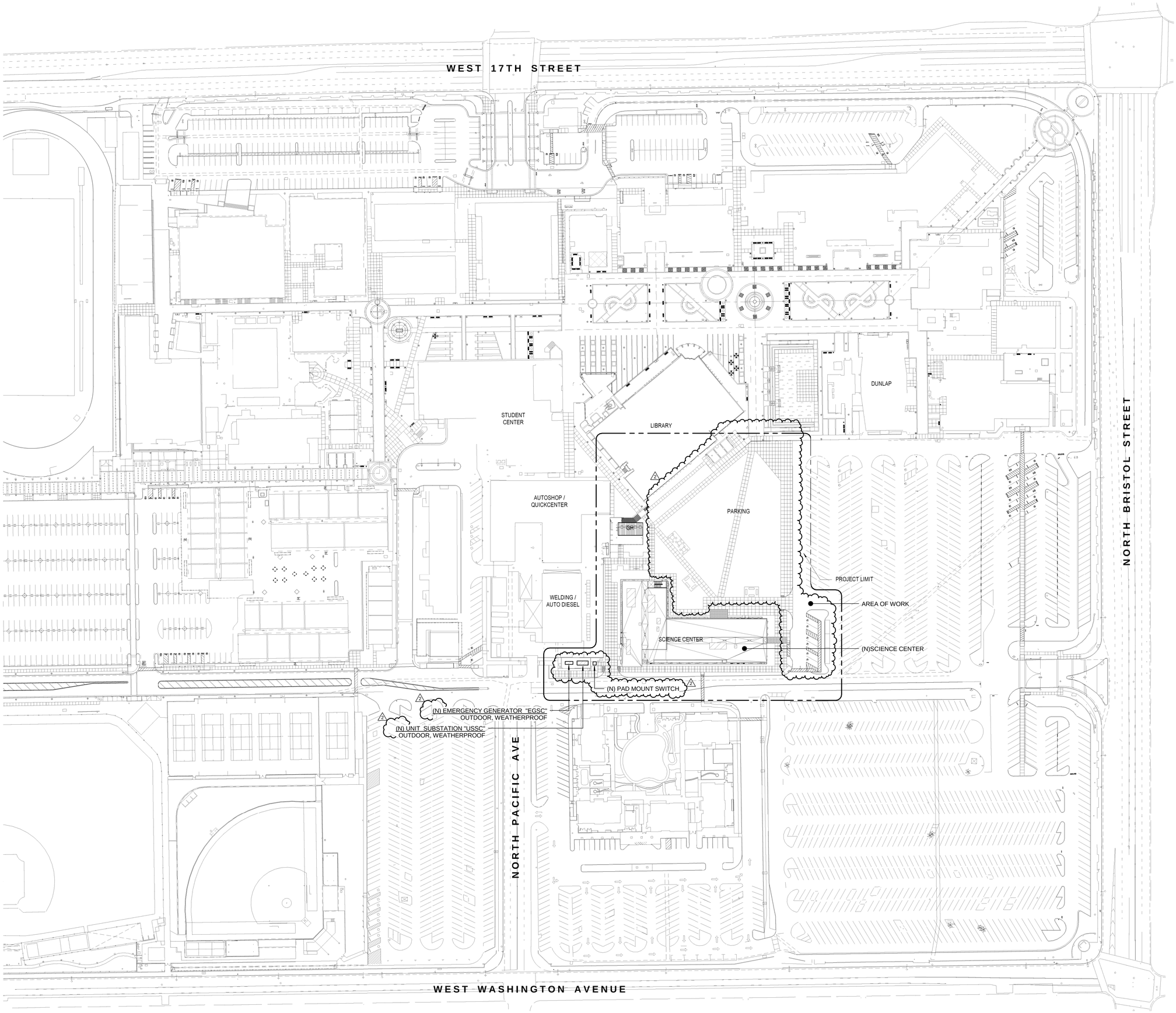

1 OVERALL SITE ELECTRICAL PLAN
1" = 60'-0"

HGA
1918 Main Street, Third Floor
Santa Monica, California 90405
Telephone 310.557.7600

STRUCTURAL ENGINEER
SAIFUL BOUQUET
155 N LAKE AVE
PASADENA, CA 91101
626-304-2616

MECHANICAL & PLUMBING ENGINEER
STANTEC CONSULTING INC
14130 RIVERSIDE DR. # 201
SHERMAN OAKS, CA 91423
818-377-8220

ELECTRICAL ENGINEER
FBA ENGINEERING
150 PAULARINO AVE. #A120
COSTA MESA, CA 92626
949-852-9995

CIVIL ENGINEER
KPFF CONSULTING ENGINEERS
700 SOUTH FLOWER ST. #2100
LOS ANGELES, CA 90017
213-418-0201

LANDSCAPE ARCHITECT
LYNN CAPOUYA, INC.
17992 MITCHELL SOUTH, #110
IRVINE, CA 92614
949-756-0150

LABORATORY CONSULTANT
RESEARCH FACILITIES DESIGN
3965 FIFTH AVE. #400
SAN DIEGO, CA 92103
619-297-0159

SCIENCE CENTER
SANTA ANA COLLEGE

RANCHO SANTIAGO COMMUNITY COLLEGE DISTRICT

1530 W. 17TH ST.
SANTA ANA, CA 92706

SANTA ANA COLLEGE

I HEREBY CERTIFY THAT THIS PLAN, SPECIFICATION OR REPORT WAS PREPARED BY ME OR UNDER MY DIRECT SUPERVISION AND THAT I AM A DULY LICENSED ARCHITECT UNDER THE LAWS OF THE STATE OF CA.

LICENSED ARCHITECT JAMES G. MATSON No. 13036 SEPTEMBER 30, 2017 RENEWAL DATE STATE OF CALIFORNIA

LICENSED ARCHITECT JAMES G. MATSON No. 13036 SEPTEMBER 30, 2017 RENEWAL DATE STATE OF CALIFORNIA

NAME: JAMES G. MATSON
DATE: MAY 16, 2017
REGISTRATION NUMBER: C13036

NO	DESCRIPTION	DATE
2	ADDENDUM 2	9/1/17

ISSUANCE HISTORY - THIS SHEET

DRAWN BY: FBA | REVIEW BY: R. Rogers

HGA NO: 3584-001-00

OVERALL SITE ELECTRICAL PLAN

DATE: JULY 06, 2017

E1.1

ADDENDA PACKAGE

© COPYRIGHT HAMMEL, GREEN AND ABRAHAMSON, INC.

FBA 8/30/2017 5:43:26 PM C:\Users\JGomez\Desktop\REVIT PROJECTS\SAC SCIENCE CENTER\SAC_Science Center_E_16_Local.rvt

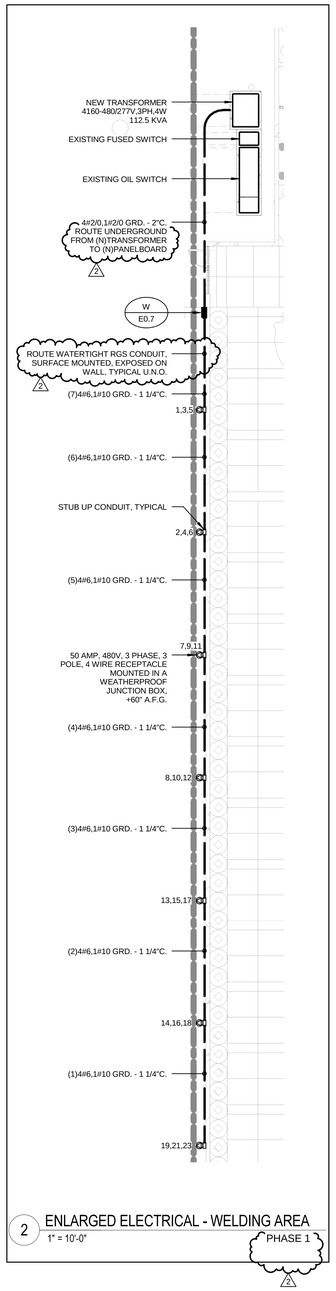

2 ENLARGED ELECTRICAL - WELDING AREA
1" = 10'-0"

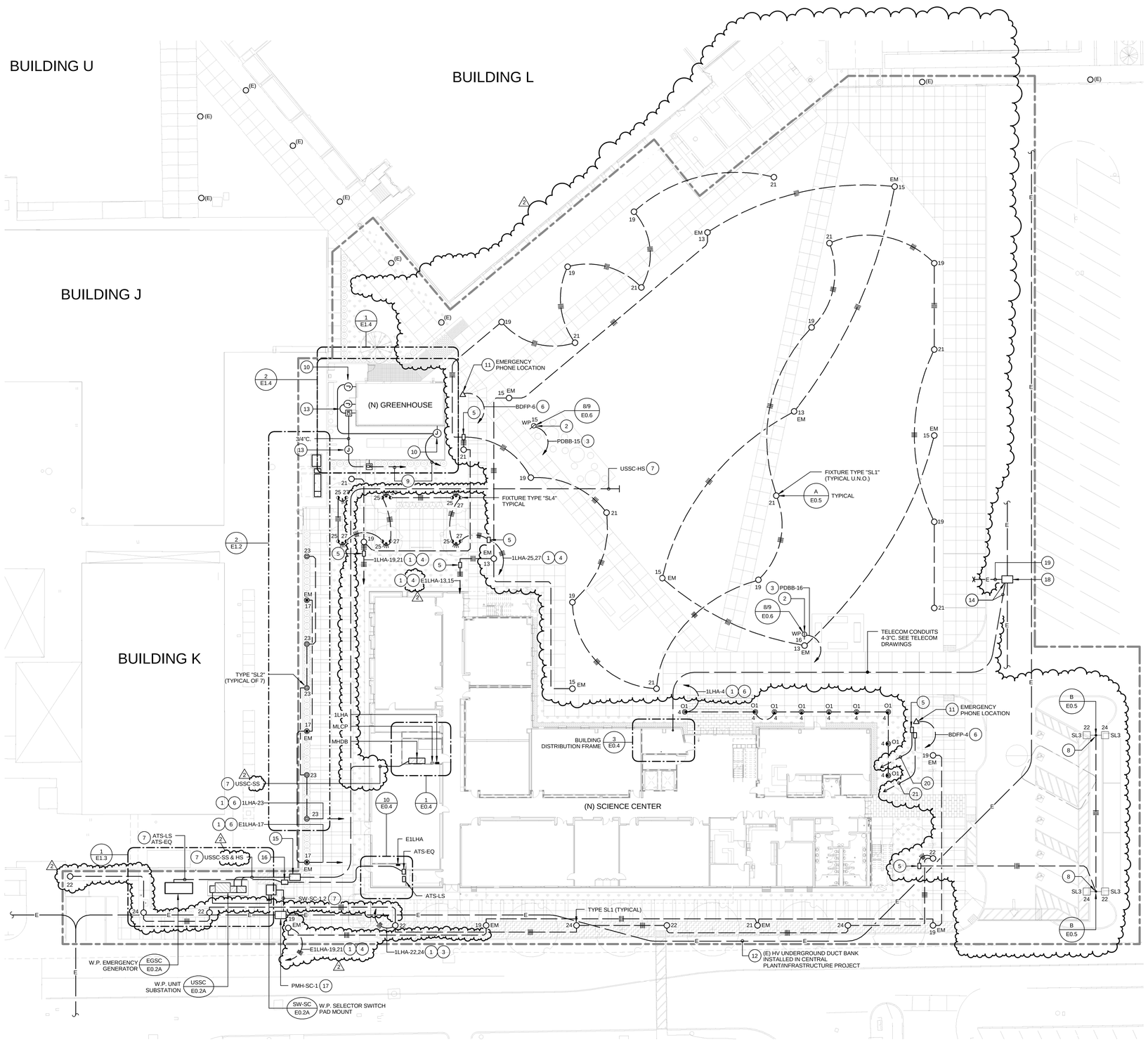

PLAN NOTES:

1. ROUTE VIA MASTER LIGHTING CONTROL PANEL "MLCP".
2. PROVIDE 250V, 50 AMP., 3 POLE TWISTLOCK RECEPTACLE IN LOCKING ENCLOSURE MOUNTED IN CONCRETE PEDESTAL FOR EVENT POWER.
3. PROVIDE 3#6, 1#10 GRD. - 1 1/4"C.
4. PROVIDE 4#10, 1#10 GRD. - 1"C.
5. PROVIDE 17" X 30" X 36" DEEP PRECAST CONCRETE PULLBOX WITH BOLT DOWN TRAFFIC RATED COVER. ENGRAVE COVER TO READ: "LIGHTING".
6. PROVIDE 2 # 12 - 1 # 12 GRD. - 1"C.
7. REFERENCE SINGLE LINE DIAGRAM SHEET E0.2A FOR FEEDER REQUIREMENTS. CONCRETE ENCASE ALL DUCT BANKS IN ACCORDANCE WITH SPECIFICATION SECTION 260543.
8. PROVIDE CONDUIT IN LIGHTING POLE FOR SECURITY CAMERA AS PER DETAIL C/SE4.02.
9. PROVIDE 3/4"C. TO SECURITY ACCESS CONTROL PANEL IN ROOM 109.
10. W.P. JUNCTION BOX FOR SECURITY CAMERA AS PER DETAIL F/SE4.02.
11. EMERGENCY PHONE BY SECURITY CONTRACTOR. PROVIDE 120V CIRCUIT AS SHOWN.
12. FIELD VERIFY EXACT LOCATION.
13. PROVIDE JUNCTION BOXES FOR CARD READERS AS PER DETAILS ON SHEETS SE4.01 AND SE4.02.
14. CORE THE EXISTING COMMUNICATIONS VAULT AND PROVIDE FOUR(4) 3" CONDUITS UNDERGROUND TO THE SCIENCE CENTER BUILDING DISTRIBUTION FRAME ROOM. SEE TELECOM DRAWINGS FOR CABLING REQUIREMENTS.
15. PROVIDE 3'-0"X5'-0"X3'-0" PRECAST CONCRETE PULLBOX WITH BOLT DOWN TRAFFIC RATED TORSION SPRING COVER. ENGRAVE COVER TO READ "ELECTRICAL".
16. PROVIDE 2'-0"X3'-0"X3'-0" PRECAST CONCRETE PULLBOX WITH BOLT DOWN TRAFFIC RATED COVER. ENGRAVE COVER TO READ "ELECTRICAL".
17. PROVIDE 5'-0" X 10'-6" X 7'-0" DEEP INTERCEPT TYPE MANHOLE.
18. EXISTING COMMUNICATIONS VAULT INSTALLED IN THE CAMPUS INFRASTRUCTURE PROJECT. FIELD VERIFY THE EXACT LOCATION.
19. EXISTING FOUR(4) 3" CONDUIT ONLY STUBBED OUT IN CAMPUS INFRASTRUCTURE PROJECT.
20. PROVIDE 1"C.O. TO PANELBOARD 1LHA FOR FUTURE DIGITAL SIGN.
21. PROVIDE 1"C.O. TO BDF.

SITE PLAN PERFORMANCE NOTES

1. ELECTRICAL CONTRACTOR SHALL EXERCISE EXTREME CAUTION IN EXCAVATING AND TRENCHING ON THIS SITE TO AVOID EXISTING DUCTS, PIPING OR CONDUIT, ETC., AND TO PREVENT HAZARD TO PERSONNEL AND/OR DAMAGE TO EXISTING UNDERGROUND UTILITIES OR STRUCTURES WHETHER OR NOT SHOWN OR DETAILED AND INSTALLED BY THIS OR ANY OTHER CONTRACTS. THE CONTRACTOR SHALL IMMEDIATELY NOTIFY THE DISTRICT SHOULD SUCH UNIDENTIFIED CONDITIONS BE DISCOVERED. THESE DRAWINGS AND SPECIFICATIONS DO NOT INCLUDE NECESSARY COMPONENTS FOR CONSTRUCTION SAFETY.

2. HEAVY DUTY PAVEMENT FOR FIRE LANE SHALL BE PROVIDED WHERE UNDERGROUND CONDUITS OCCUR. REFER TO CIVIL DRAWING 4/C5.00.

1 ENLARGED SITE ELECTRICAL PLAN
1" = 20'-0"

1918 Main Street, Third Floor
Santa Monica, California 90405
Telephone 310.557.7600

STRUCTURAL ENGINEER
SAIFUL BOUQUET
155 N LAKE AVE
PASADENA, CA 91101
626-304-2616

MECHANICAL & PLUMBING ENGINEER
STANTEC CONSULTING INC
14130 RIVERSIDE DR. # 201
SHERMAN OAKS, CA 91423
818-377-8220

ELECTRICAL ENGINEER
FBA ENGINEERING
150 PAULARINO AVE. #A120
COSTA MESA, CA 92626
949-852-9995

CIVIL ENGINEER
KPFF CONSULTING ENGINEERS
700 SOUTH FLOWER ST. #2100
LOS ANGELES, CA 90017
213-418-0201

LANDSCAPE ARCHITECT
LYNN CAPOUYA, INC.
17992 MITCHELL SOUTH, #110
IRVINE, CA 92614
949-756-0150

LABORATORY CONSULTANT
RESEARCH FACILITIES DESIGN
3965 FIFTH AVE. #400
SAN DIEGO, CA 92103
619-297-0159

SCIENCE CENTER
SANTA ANA COLLEGE
RANCHO SANTIAGO COMMUNITY COLLEGE DISTRICT
1530 W. 17TH ST.
SANTA ANA, CA 92706

SANTA ANA COLLEGE

I HEREBY CERTIFY THAT THIS PLAN, SPECIFICATION OR REPORT WAS PREPARED BY ME OR UNDER MY DIRECT SUPERVISION AND THAT I AM A DULY LICENSED ARCHITECT UNDER THE LAWS OF THE STATE OF CA

NAME: JAMES G. MATSON
DATE: MAY 16, 2017
REGISTRATION NUMBER: C13036

NO	DESCRIPTION	DATE
2	ADDENDUM 2	9/1/17

ISSUANCE HISTORY - THIS SHEET

DRAWN BY: FBA | REVIEW BY: R. Rogers

HGA NO: 3584-001-00

ENLARGED SITE ELECTRICAL PLAN

DATE: JULY 06, 2017

E1.2

ADDENDA PACKAGE

© COPYRIGHT HAMMEL, GREEN AND ABRAHAMSON, INC.

FBA 8/30/2017 6:49:24 PM C:\Users\MSonner\Desktop\REVIT PROJECTS\SAC SCIENCE CENTER\SAC_Science Center_R_16_local.rvt

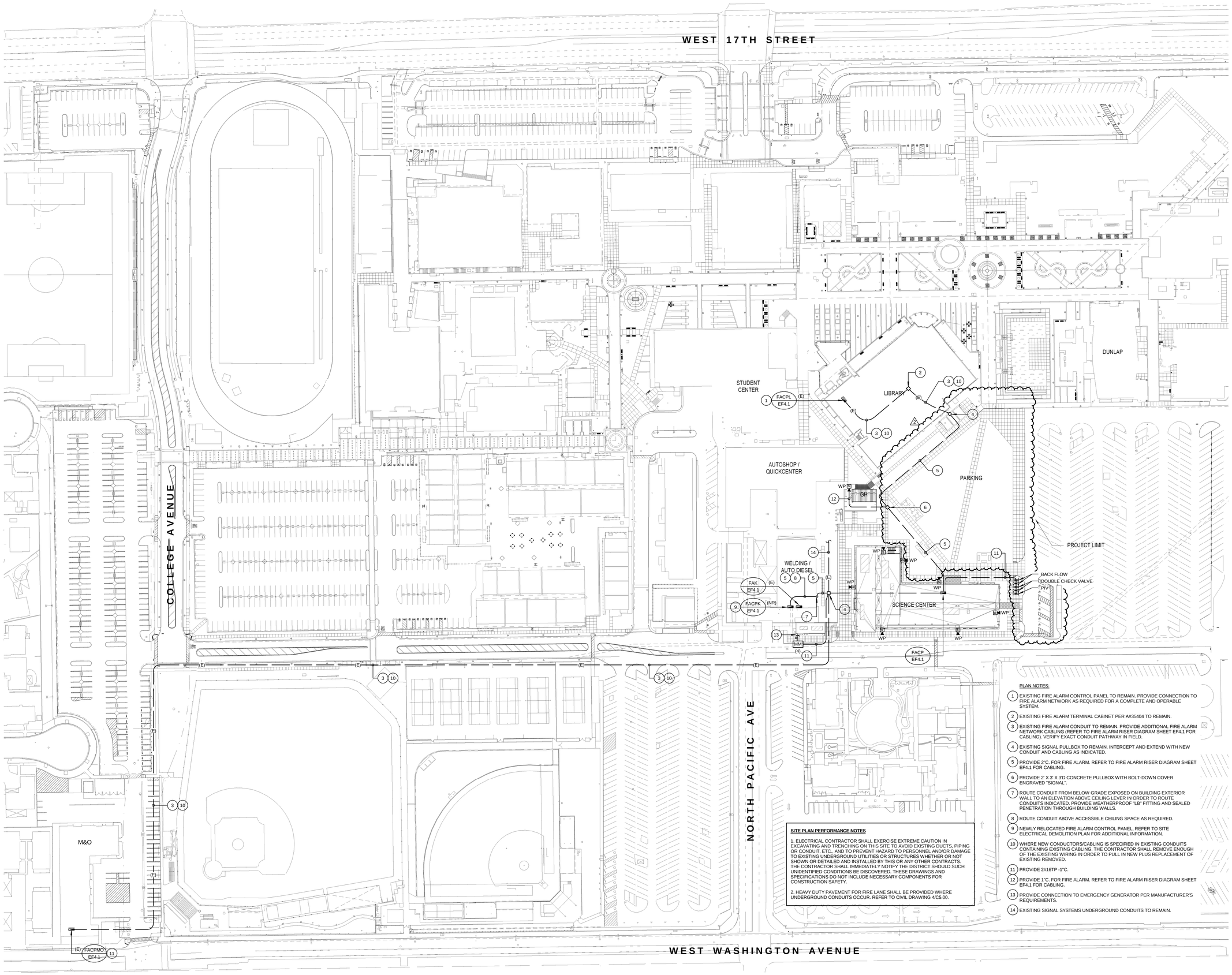

1 OVERALL SITE FIRE ALARM PLAN
1" = 60'-0"

SITE PLAN PERFORMANCE NOTES

1. ELECTRICAL CONTRACTOR SHALL EXERCISE EXTREME CAUTION IN EXCAVATING AND TRENCHING ON THIS SITE TO AVOID EXISTING DUCTS, PIPING OR CONDUIT, ETC., AND TO PREVENT HAZARD TO PERSONNEL AND/OR DAMAGE TO EXISTING UNDERGROUND UTILITIES OR STRUCTURES WHETHER OR NOT SHOWN OR DETAILED AND INSTALLED BY THIS OR ANY OTHER CONTRACTS. THE CONTRACTOR SHALL IMMEDIATELY NOTIFY THE DISTRICT SHOULD SUCH UNIDENTIFIED CONDITIONS BE DISCOVERED. THESE DRAWINGS AND SPECIFICATIONS DO NOT INCLUDE NECESSARY COMPONENTS FOR CONSTRUCTION SAFETY.

2. HEAVY DUTY PAVEMENT FOR FIRE LANE SHALL BE PROVIDED WHERE UNDERGROUND CONDUITS OCCUR. REFER TO CIVIL DRAWING 4/C5.00.

PLAN NOTES:

1. EXISTING FIRE ALARM CONTROL PANEL TO REMAIN. PROVIDE CONNECTION TO FIRE ALARM NETWORK AS REQUIRED FOR A COMPLETE AND OPERABLE SYSTEM.
2. EXISTING FIRE ALARM TERMINAL CABINET PER A#35404 TO REMAIN.
3. EXISTING FIRE ALARM CONDUIT TO REMAIN. PROVIDE ADDITIONAL FIRE ALARM NETWORK CABLING (REFER TO FIRE ALARM RISER DIAGRAM SHEET EF4.1 FOR CABLING). VERIFY EXACT CONDUIT PATHWAY IN FIELD.
4. EXISTING SIGNAL PULLBOX TO REMAIN. INTERCEPT AND EXTEND WITH NEW CONDUIT AND CABLING AS INDICATED.
5. PROVIDE 2"C. FOR FIRE ALARM. REFER TO FIRE ALARM RISER DIAGRAM SHEET EF4.1 FOR CABLING.
6. PROVIDE 2' X 3' X 3'D CONCRETE PULLBOX WITH BOLT-DOWN COVER ENGRAVED "SIGNAL".
7. ROUTE CONDUIT FROM BELOW GRADE EXPOSED ON BUILDING EXTERIOR WALL TO AN ELEVATION ABOVE CEILING LEVER IN ORDER TO ROUTE CONDUITS INDICATED. PROVIDE WEATHERPROOF "LB" FITTING AND SEALED PENETRATION THROUGH BUILDING WALLS.
8. ROUTE CONDUIT ABOVE ACCESSIBLE CEILING SPACE AS REQUIRED.
9. NEWLY RELOCATED FIRE ALARM CONTROL PANEL, REFER TO SITE ELECTRICAL DEMOLITION PLAN FOR ADDITIONAL INFORMATION.
10. WHERE NEW CONDUCTORS/CABLING IS SPECIFIED IN EXISTING CONDUITS CONTAINING EXISTING CABLING. THE CONTRACTOR SHALL REMOVE ENOUGH OF THE EXISTING WIRING IN ORDER TO PULL IN NEW PLUS REPLACEMENT OF EXISTING REMOVED.
11. PROVIDE 2#16TP -1"C.
12. PROVIDE 1"C. FOR FIRE ALARM. REFER TO FIRE ALARM RISER DIAGRAM SHEET EF4.1 FOR CABLING.
13. PROVIDE CONNECTION TO EMERGENCY GENERATOR PER MANUFACTURER'S REQUIREMENTS.
14. EXISTING SIGNAL SYSTEMS UNDERGROUND CONDUITS TO REMAIN.

hga.
1918 Main Street, Third Floor
Santa Monica, California 90405
Telephone 310.557.7600

STRUCTURAL ENGINEER
SAIFUL BOUQUET
155 N LAKE AVE
PASADENA, CA 91101
626-304-2616

MECHANICAL & PLUMBING ENGINEER
STANTEC CONSULTING INC
14130 RIVERSIDE DR. # 201
SHERMAN OAKS, CA 91423
818-377-8220

ELECTRICAL ENGINEER
FBA ENGINEERING
150 PAULARINO AVE. #A120
COSTA MESA, CA 92626
949-852-9995

CIVIL ENGINEER
KPFF CONSULTING ENGINEERS
700 SOUTH FLOWER ST. #2100
LOS ANGELES, CA 90017
213-418-0201

LANDSCAPE ARCHITECT
LYNN CAPOUYA, INC.
17992 MITCHELL SOUTH, #110
IRVINE, CA 92614
949-756-0150

LABORATORY CONSULTANT
RESEARCH FACILITIES DESIGN
3965 FIFTH AVE. #400
SAN DIEGO, CA 92103
619-297-0159

SCIENCE CENTER
SANTA ANA COLLEGE

RANCHO SANTIAGO COMMUNITY COLLEGE DISTRICT

1530 W. 17TH ST.
SANTA ANA, CA 92706

SANTA ANA COLLEGE

I HEREBY CERTIFY THAT THIS PLAN, SPECIFICATION OR REPORT WAS PREPARED BY ME OR UNDER MY DIRECT SUPERVISION AND THAT I AM A DULY LICENSED ARCHITECT UNDER THE LAWS OF THE STATE OF CA

NAME: JAMES G. MATSON
DATE: MAY 16, 2017
REGISTRATION NUMBER: C13036

NO	DESCRIPTION	DATE
2	ADDENDUM 2	9/1/17

ISSUANCE HISTORY - THIS SHEET

DRAWN BY: FBA | REVIEW BY: R. Rogers

HGA NO: 3584-001-00

OVERALL SITE FIRE ALARM PLAN

DATE: JULY 06, 2017

EF4.5

ADDENDA PACKAGE

© COPYRIGHT HAMMEL, GREEN AND ABRAHAMSON, INC.

8/30/2017 6:56:38 PM C:\Users\JOconnor\Desktop\REVIT PROJECTS\SAC SCIENCE CENTER\SAC_Science Center_R_10_localJoc FBA

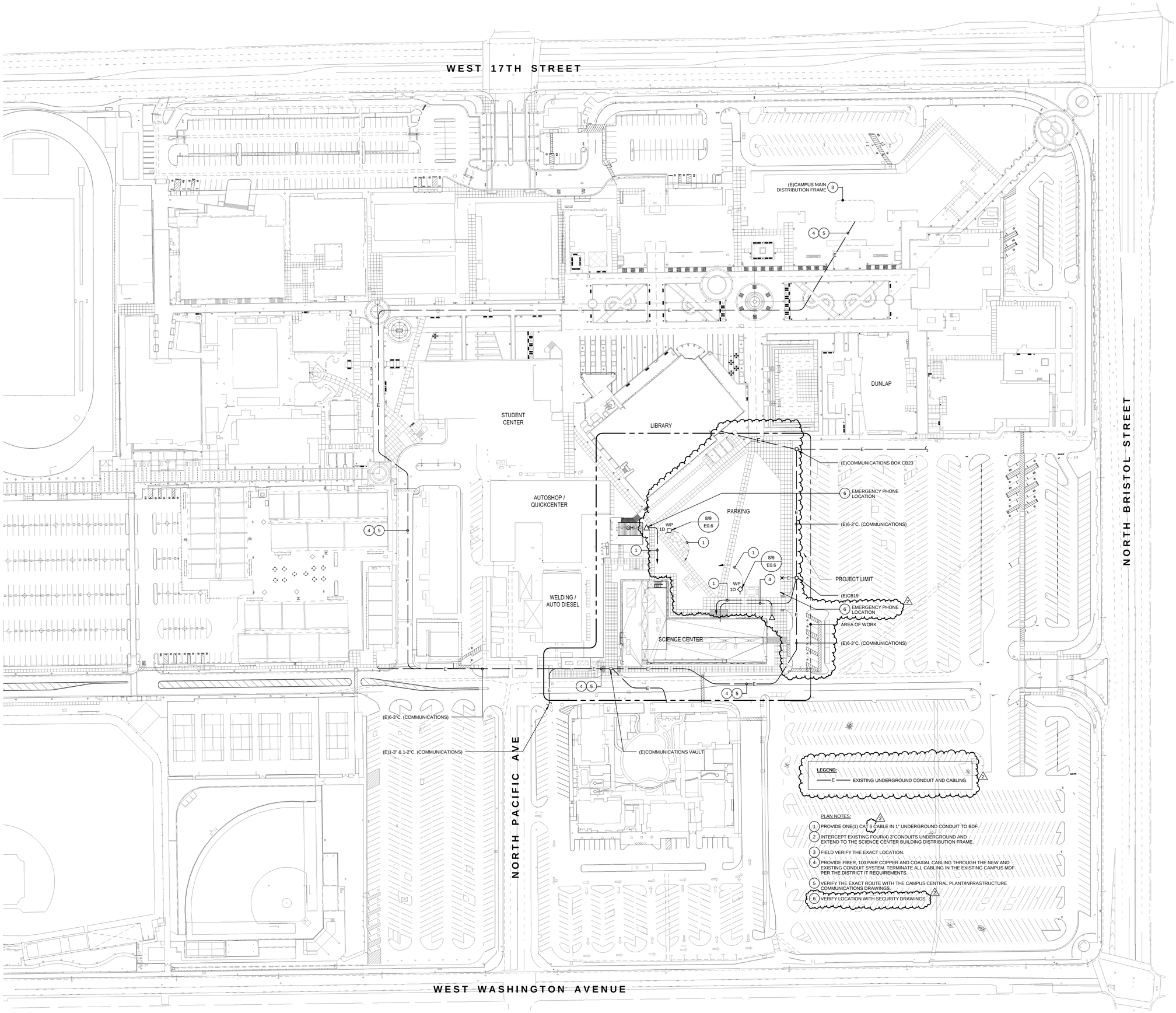

1 OVERALL SITE TELECOM PLAN
1" = 60'-0"

hga.
1918 Main Street,Third Floor
Santa Monica , California 90405
Telephone 310.557.7600

STRUCTURAL ENGINEER
SAIFUL BOUQUET
155 N LAKE AVE
PASADENA, CA 91101
626-304-2616

MECHANICAL & PLUMBING ENGINEER
STANTEC CONSULTING INC
14130 RIVERSIDE DR. # 201
SHERMAN OAKS, CA 91423
818-377-8220

ELECTRICAL ENGINEER
FBA ENGINEERING
150 PAULARINO AVE. #A120
COSTA MESA, CA 92626
949-852-9995

CIVIL ENGINEER
KPFF CONSULTING ENGINEERS
700 SOUTH FLOWER ST. #2100
LOS ANGELES, CA 90017
213-418-0201

LANDSCAPE ARCHITECT
LYNN CAPOUYA, INC.
17992 MITCHELL SOUTH, #110
IRVINE, CA 92614
949-756-0150

LABORATORY CONSULTANT
RESEARCH FACILITIES DESIGN
3965 FIFTH AVE. #400
SAN DIEGO, CA 92103
619-297-0159

SCIENCE CENTER
SANTA ANA COLLEGE

RANCHO SANTIAGO COMMUNITY COLLEGE DISTRICT

1530 W. 17TH ST.
SANTA ANA, CA 92706

SANTA ANA COLLEGE

I HEREBY CERTIFY THAT THIS PLAN, SPECIFICATION OR REPORT WAS PREPARED BY ME OR UNDER MY DIRECT SUPERVISION AND THAT I AM A DULY LICENSED ARCHITECT UNDER THE LAWS OF THE STATE OF CA.

NAME: JAMES G. MATSON
DATE: MAY 16, 2017
REGISTRATION NUMBER: C13036

NO	DESCRIPTION	DATE
2	ADDENDUM 2	9/1/17

ISSUANCE HISTORY - THIS SHEET

DRAWN BY: FBA | REVIEW BY: R. Rogers

HGA NO: 3584-001-00

OVERALL SITE TELECOM PLAN

DATE: JULY 06, 2017

T1.4

ADDENDA PACKAGE

© COPYRIGHT HAMMEL, GREEN AND ABRAHAMSON, INC.

FBA 8/30/2017 6:03:22 PM C:\Users\Schmidt\Desktop\REVIT PROJECTS\SAC SCIENCE CENTER\SAC_ScienceCenter_R_19_Lloyd.rvt

SECURITY DEVICE AND WIRING LEGEND

SYMBOL	DESCRIPTION	WIRING	NOTE REFERENCE
ACP	ACCESS CONTROL PANEL	1 120VAC EMERGENCY DEDICATED 20AMP CIRCUIT 1 LAN/WAN NETWORK CONNECTION	D,E
A	ALARM CONTACT - CONCEALED	SEE BELOW	SEE BELOW
	BLUE LIGHT EMERGENCY STROBE	SEE SPECS	P
EL	ELECTRIC LOCK	SEE BELOW	SEE BELOW
EB	EMERGENCY BUTTON	1-#18/4 PLENUM CABLE	O
EP	EMERGENCY PHONE WITH BLUE LIGHT	1 CAT6	E,H
EA	EXIT ALARM - WALL MOUNTED	1-#18/4 PLENUM CABLE	
IP	FIXED IP CAMERA - SURFACE CEILING MOUNTED	1 CAT6	E
KP	KEYPAD - WALL MOUNTED	1-#18/4 PLENUM CABLE	
	LAN/WAN CONNECTION	1 CAT6	E
PS	POWER SUPPLY	1 120VAC EMERGENCY DEDICATED 20AMP CIRCUIT	D
CR	PROXIMITY CARD READER - WALL MOUNTED	SEE BELOW	SEE BELOW
IP	PTZ IP CAMERA - WALL MOUNTED	1 CAT6	E

2

TYPICAL CARD READER DOOR CONFIGURATION

SYMBOL		DESCRIPTION	WIRING	NOTES
CR	CR	PROXIMITY CARD READER - WALL MOUNTED	1-#22/4 SHIELDED PLENUM CABLE FROM ACP (SRI DATA) 1-#18/4 SHIELDED CABLE FROM ACP (12V AND 24VDC) 1-#18/6 SHIELDED PLENUM (FROM READER TO SRI ABOVE DOOR)	B,C,J,K
	A	ALARM CONTACT - CONCEALED	1-#18/2 PLENUM (AT DOOR CONTACTS WITH SINGLE CONNECTION) 2-#18/2 PLENUM (AT DPDT CONTACT ONLY)	B,C,I,K
	EL	ELECTRIFIED LOCK	USE RED/BLACK OF 18/4 ABOVE TO POWER REX AND SRI	C,F,K
	RX	REQUEST-TO-EXIT SENSOR	1-#18/6 PLENUM (FROM REX TO SRI ABOVE DOOR) USE GREEN/WHITE OF 18/4 ABOVE TO POWER LOCK 1-#18/2 PLENUM (POWER FROM ACP)	C,K

SECURITY DEVICE LEGEND NOTES

A ALL EXIT DOORS TO REMAIN FREE OPENING FROM EXIT SIDE.

B ON DOUBLE DOORS INSTALL TWO (2) CONTACTS, SERIES THE CIRCUIT AT THE DOORS AND RUN ONE CABLE TO HEAD-END.

C ALL CABLES TO BE PLENUM RATED.

D 120VAC POWER BY ELECTRICAL CONTRACTOR. PROVIDE DEDICATED CIRCUITS TERMINATED PER THE PROJECT DETAILS.

E NETWORK CONNECTION BY COMMUNICATIONS CONTRACTOR. PROVIDE 15' SERVICE LOOP AT CAMERA LOCATIONS

F BY HARDWARE CONTRACTOR.

G CABLE TO BE PARALLEL.

H PHONE CONNECTIONS BY COMMUNICATION CONTRACTOR. PROVIDE ANALOG LINES.

I PROVIDE TWO WIRES AT CONTACTS WITH CONNECTIONS TO THE ACCESS CONTROL SYSTEM AND TO THE INTRUSION ALARM SYSTEMS. ONLY ONE WIRE IS REQUIRED IF THE DEVICE AND POINT ONLY CONNECT TO ONE SYSTEM.

J ALL CARD READERS FOR DOORS WITH SIDELIGHTS SHALL BE MULLION MOUNTED. CARD READERS FOR DOORS WITHOUT SIDELIGHTS SHALL BE MOUNTED TO THE FRAME.

K CABLES TO PARALLEL.

L PC BY IT SEE SPECIFICATIONS.

M BY OTHERS

N PUSH BUTTON MEANT FOR DOOR RELEASE OF ASSOCIATED DOOR WITH AUTO DOOR OPENER

O EMERGENCY BUTTON MEANT TO LOCK ASSOCIATED DOORS AND ISSUE EVENT NOTIFICATION TO ACCESS CONTROL SYSTEM. COMMENCE "LOCKDOWN" PROCEDURE IDENTIFIED BY THE OWNER.

P COORDINATE FINAL LOCATIONS OF BLUE LIGHT STROBES WITH SECURITY CONSULTANT PRIOR TO INSTALLATION. STROBES SHALL BE MOUNTED ON OUTSIDE OF BUILDING AT A TOTAL OF (4) LOCATIONS AND SHALL LIGHT UP UNDER LOCKDOWN MODE.

2

SECURITY DRAWING INDEX

SHEET NUMBER	SHEET DESCRIPTION
SE0.01	SECURITY SYMBOLS LEGEND AND SHEET INDEX
SE1.11	SECURITY ELECTRONICS SITE PLAN
SE2.01	SECURITY ELECTRONICS FIRST LEVEL DEVICE PLAN
SE2.02	SECURITY ELECTRONICS SECOND LEVEL DEVICE PLAN
SE2.03	SECURITY ELECTRONICS THIRD LEVEL DEVICE PLAN
SE2.04	SECURITY ELECTRONICS ROOF DEVICE PLAN
SE3.01	SECURITY ELECTRONICS RISERS DIAGRAM
SE4.01	SECURITY ELECTRONICS DETAILS
SE4.02	SECURITY ELECTRONICS DETAILS
SE4.03	SECURITY ELECTRONICS DETAILS
SE4.04	SECURITY ELECTRONICS DETAILS
SE5.01	SECURITY ELECTRONICS ACCESS CTRL. AND CAMERA SCHEDULES

SECURITY ABBREVIATIONS

A.C.P.	ACCESS CONTROL PANEL
A.F.F.	ABOVE FINISHED FLOOR
F.O.V.	FIELD OF VIEW
I.A.P.	INTRUSION ALARM PANEL
N/A	NOT APPLICABLE
RECP	RECEPTION
S.O.C.	SECURITY OPERATIONS CENTER
SH	SHIELDED
T.B.D.	TO BE DETERMINED
TW	TWISTED
U.O.N.	UNLESS OTHERWISE NOTED
V.I.F.	VERIFY IN FIELD
WP	WEATHER PROOF

DETAIL REFERENCE

— DETAIL NUMBER

— SHEET NUMBER

SECURITY GENERAL NOTES

1 ALL WORK SHALL BE IN ACCORDANCE WITH THE LATEST EDITION OF THE NATIONAL ELECTRICAL CODE AND ALL APPLICABLE LOCAL CODES. THE CONTRACTOR SHALL NOT INTERMIX ANY LINE VOLTAGE POWER WIRES (120VAC) WITH ANY LOW VOLTAGE SIGNAL OR CONTROL WIRES IN ANY CONDUIT.

2 VERIFY ALL FIELD DIMENSIONS AND CONDITIONS, NOTIFY ARCHITECT OF ANY DISCREPANCIES FOUND. VERIFY DIMENSIONS OF ALL OWNER FURNISHED EQUIPMENT & SERVICES TO ENSURE PROPER COORDINATION WITH CONSTRUCTION.

3 SCHEDULE ALL WORK, INCLUDING CONSTRUCTION ACCESS AND STORAGE, WITH THE OWNER OR THOSE DESIGNATED BY THE OWNER. THE CONSTRUCTION SCHEDULE SHALL BE APPROVED BY THE OWNER PRIOR TO THE START OF CONSTRUCTION.

4 ALL UTILITIES REQUIRED FOR THE CONTINUOUS OPERATION OF ALL EXISTING FACILITIES MUST BE MAINTAINED IN SERVICE AT ALL TIMES (IF APPLICABLE).

5 CONTRACTOR SHALL PROVIDE DUST PROTECTION AS REQUIRED TO CONTAIN DUST AND DEBRIS WITHIN CONSTRUCTION AREA, BROOM CLEAN ALL AREAS EACH DAY.

6 COORDINATE WITH THE OWNER TO DETERMINE IF REMOVED ITEMS (IF APPLICABLE) WILL BE KEPT BY THE OWNER. COORDINATE A STORAGE LOCATION AND DELIVER AS DIRECTED BY THE OWNER. DISPOSAL OF OLD EQUIPMENT SHALL BE IN ACCORDANCE WITH FEDERAL, STATE AND LOCAL LAWS.

7 WORK SHALL BE EXECUTED IN A CAREFUL AND ORDERLY MANNER WITH THE LEAST POSSIBLE DISTURBANCE TO THE PUBLIC AND OCCUPANTS OF EXISTING BUILDINGS. INTERRUPTING PERSONNEL AT WORK AS A RESULT OF THIS UNDERTAKING SHALL ALWAYS BE KEPT TO A MINIMUM. CONTRACTOR SHALL PROVIDE TRAFFIC AND SAFETY SIGNS AND BARRIERS WHERE NECESSARY. NO POWER LINE IN THE BUILDING SHALL BE SHUT DOWN UNLESS REQUESTED AND APPROVED BY THE OWNER IN ADVANCE.

8 THE CONTRACTORS AND SUBCONTRACTORS PERFORMING WORK ON PREMISES SHALL BE RESPONSIBLE FOR INITIATING, MAINTAINING AND SUPERVISING A REASONABLE AND PRUDENT SAFETY PROGRAM INCLUDING, BUT NOT LIMITED TO, THE ISOLATION OF WORK AREAS AND THE PROMPT REMOVAL OF ANY DEBRIS OR TOOLS WHICH MIGHT ENDANGER VISITORS OR EMPLOYEES OF THE FACILITY. ALL ROADS AND WALKWAYS SHALL REMAIN CLEAR AND UNOBSTRUCTED. WHEN NECESSARY ALTERNATE ROUTES MUST BE MAINTAINED, SHOULD UNSAFE CONDITIONS OCCUR.

9 COORDINATION WITH OTHER CONTRACTORS:
IF ANY PART OF THE CONTRACTOR'S WORK DEPENDS UPON THE WORK OF A SEPARATE CONTRACTOR, THIS CONTRACTOR SHALL INSPECT SUCH OTHER WORK AND PROMPTLY REPORT IN WRITING TO THE PROJECT ARCHITECT ANY DEFECTS IN SUCH OTHER WORK THAT RENDER IT UNSUITABLE TO RECEIVE THE WORK OF THIS CONTRACTOR, FAILURE TO INSPECT AND REPORT SHALL CONSTITUTE AN ACCEPTANCE OF THE OTHER CONTRACTOR'S WORK EXCEPT AS TO DEFECTS WHICH DEVELOP IN OTHER CONTRACTOR'S WORK AFTER EXECUTION OF THIS CONTRACTOR'S WORK.

10 THE CONTRACTOR SHALL ALWAYS MAINTAIN, AT THE JOB SITE, UPDATED "RECORD" DRAWINGS. THESE DRAWINGS SHALL BE AVAILABLE TO THE ARCHITECTS, INSPECTORS OR THE OWNERS UPON REQUEST.

11 NO CABLE RUN SHALL BE SPLICED UNLESS TWO OR MORE DEVICES ARE CONNECTED TO THE SAME CIRCUIT OR THE DEVICE IS PROVIDED FROM THE FACTORY WITH PIGTAIL WIRES. WHERE SPLICING IS REQUIRED, THE SPLICE SHALL BE SOLDERED AND TAPED, IT SHALL BE DONE IN EITHER A SPECIAL TERMINAL BOX, AT THE BACK BOX OR AT THE DEVICE TERMINAL LUGS. ALL SPLICE BOXES MUST BE IN ACCESSIBLE AREAS AND CLEARLY MARKED ON THE RECORD DRAWINGS.

12 ALL WIRES SHALL BE COLOR CODED AND SHALL BE CONNECTED IN A UNIFORM MANNER. TRANSPOSING OR CHANGING OF COLOR CODES SHALL NOT BE PERMITTED. WIRE AND CABLE SIZES, NUMBER OF CONDUCTORS, SHIELDING OR OTHER ITEMS LISTED ON THESE DRAWINGS ARE A GUIDE TO THE CORRECT PRODUCT REQUIRED TO ACHIEVE A WORKING SYSTEM AND REPRESENT THE MINIMUM ACCEPTABLE STANDARDS. CONTRACTOR SHALL CONSULT MANUFACTURER'S RECOMMENDATION FOR CABLING AND USE WHICHEVER IS GREATER IN QUALITY, QUANTITY, GAUGE, SHIELDING AND NUMBER OF CONDUCTORS.

13 ALL WIRING, INCLUDING SHIELDS, MUST BE FREE OF SHORTS, GROUNDS AND STRAY VOLTAGES. ALL EXPOSED SURFACE MOUNTED CABLE UNDER 12' A.F.F. SHALL BE IN CONDUIT WHERE INSTALLED IN AREAS WITHOUT CEILINGS.

14 ALL CABLE SHALL BE PLENUM RATED ON J-HOOKS. UNDER GROUND CABLE SHALL BE RATED FOR WET APPLICATIONS. ALL EXTERIOR CABLE SHALL BE IN CONDUIT.

15 A PRE PRINTED VINYL MATERIAL MARKER WRAPPED IN ADHESIVE CLEAR PLASTIC SHALL BE PROVIDED TO THE FOLLOWING:

A.CABLES WITHIN 6" UPON ENTRY AT ANY SECURITY PANEL, TERMINATION OR SPLICE BOX.
B.ALL WIRE LEADS WITHIN 2" FROM ANY TERMINAL BLOCK.
C.THE CONTRACTOR SHALL SUBMIT SAMPLES OF MARKERS AND ANY NUMBERING OR MARKING SYSTEM FOR REVIEW PRIOR TO IMPLEMENTATION.

16 ALL NEW ELECTRICAL POWER SUPPLIED TO SECURITY EQUIPMENT OR DEVICES SHALL BE ON AN EMERGENCY SYSTEM INCLUDING UPS WHERE AVAILABLE. ALL CONDUCTORS AND CIRCUIT BREAKERS SHALL BE SIZED IN ACCORDANCE WITH THEIR CONNECTED LOADS (20 AMP MINIMUM). ALL CIRCUITS SHALL BE DEDICATED. A GROUND CONDUCTOR SHALL ALWAYS BE INSTALLED IN ANY POWER WIRING. ALL SECURITY EQUIPMENT UTILIZING ELECTRICAL POWER SHALL ALSO BE ADEQUATELY GROUNDED.

17 WHERE A NEW CIRCUIT FOR SECURITY IS TAKEN FROM A PANEL BOARD UTILIZED FOR OTHER ELECTRICAL PURPOSES, THE BRANCH CIRCUIT BREAKER FOR SECURITY EQUIPMENT SHALL BE CLEARLY LABELED TO PREVENT ANY ACCIDENTAL SWITCH-OFF. NO SECURITY CIRCUIT IS TO BE SHARED WITH NON SECURITY EQUIPMENT UNLESS OTHERWISE NOTED ON THE DRAWINGS.

18 THE CONTRACTOR SHALL PROPERLY SEAL ALL CONDUIT OR SLEEVE PENETRATIONS THROUGH ALL WALLS, FLOORS AND CEILINGS USING APPROVED FIRE STOPPING MATERIALS AND SEALANTS REGARDLESS OF RATING AND AS PER APPLICABLE BUILDING CODES.

19 ALL ROUTING OF WIRING AND ANY RELATED CONDUIT IS DIAGRAMMATIC. CONTRACTOR SHALL FIELD VERIFY EXACT ROUTING PRIOR TO INSTALLATION.

20 PROVIDE PULL STRINGS IN ALL CONDUITS. PROVIDE BLANK COVERS ON ALL JUNCTION AND PULL BOXES.

21 ALL CONDUITS AND CABLE PATHS SHALL RUN PARALLEL WITH OR AT RIGHT ANGLES TO THE WALLS, IF MORE THAN THREE 90 DEGREE BENDS ARE TO BE USED IN THE CONDUIT RUN, INSERT A PULL BOX. CONTRACTOR SHALL SIZE THE BOX ACCORDINGLY. CONDUITS SHALL BE SIZED AS INDICATED ON THE DRAWINGS OR LARGER AS REQUIRED TO COMPLY WITH CODE. MINIMUM ALLOWABLE CONDUIT SIZE SHALL BE 3/4".

22 THE CONTRACTOR SHALL CLEAN AND THOROUGHLY CHECK ALL INSTALLED WORK PRIOR TO CONCEALING OF ARCHITECTURAL FINISHING, CLEAN ALL EXPOSED SURFACES AND NEW EQUIPMENT AFTER COMPLETION. THE CONTRACTOR SHALL ALSO REPAIR OR CLEAN ALL SOILED SURFACES, PAINTED SURFACES OR DAMAGED ARCHITECTURAL FINISHES TO MATCH THE ADJACENT AREA. WHERE REQUIRED, CLEANING, PATCHING OR PAINTING TO BRING THE AFFECTED SURFACE OR FINISH BACK TO ITS ORIGINAL CONDITION SHALL BE THE RESPONSIBILITY OF THE CONTRACTOR.

23 ALL SECURITY DEVICES AND EQUIPMENT SHALL BE INSTALLED WITH CONSIDERATION TO BARRIER FREE ACCESSIBILITY.

24 WHERE THE CONTRACTOR HAS TO CHANGE ANY DEVICE TYPE OR MOUNTING TO SUIT ACTUAL CONDITIONS, THIS SHALL BE DONE WITHOUT EXTRA COST TO THE OWNERS. THIS INCLUDES ANY ADDITIONAL PART TO BE SUPPLIED BY THE CONTRACTOR TO ACCOMPLISH PROPER MOUNTING OF A DEVICE. HOWEVER, IT SHALL BE REQUESTED, SUBMITTED AND APPROVED IN WRITING BEFORE COMMENCING THE WORK.

25 COORDINATE ALL TELEPHONE AND DATA (LAN/WAN) INSTALLATION AND CONNECTION REQUIREMENTS WITH THE OWNERS IT DEPARTMENT REPRESENTATIVE AND THE GENERAL CONTRACTOR.

26 THE CONTRACTOR SHALL UNDERTAKE THIS WORK IN ITS ENTIRETY IN ACCORDANCE WITH ITS DESIGN AND PURPOSE. ALL WORK SHALL BE CARRIED OUT IN A PROFESSIONAL MANNER WITH MAXIMUM EFFICIENCY AND EXCELLENT WORKMANSHIP.

27 THE CONTRACTOR SHALL INCLUDE ANY COORDINATION, RELAYS, TIMERS, NETWORK CARDS, TERMINAL STRIPS, ETC.. REQUIRED FOR A COMPLETELY FUNCTIONAL INTERFACE WITH ELEVATOR CONTROLLERS, FIRE ALARM SYSTEMS, DOOR HARDWARE AND AUTOMATIC DOOR OPERATORS. WHICH EVER IS APPLICABLE.

28 ALL EXIT DOORS TO REMAIN FREE OPENING FROM EXIT SIDE. U. O. N.

29 IN THE EVENT OF A DISCREPANCY BETWEEN THE SPECIFICATIONS AND THE DRAWINGS, WHICHEVER IS MORE STRINGENT OR CALLS FOR THE HIGHEST QUANTITY OR QUALITY OF MATERIALS HAS PRECEDENCE.

30 THE USE OF THE WORD "PROVIDE" IN CONNECTION WITH ANY ITEM SPECIFIED, IS INTENDED TO MEAN THAT SUCH SHALL BE FURNISHED, INSTALLED AND CONNECTED, WHERE SO REQUIRED, EXCEPT AS NOTED OTHERWISE.

31 PRIOR TO SUBMITTAL OF BID, NOTIFY, IN WRITING, SPECIFIED MATERIALS OR EQUIPMENT WHICH ARE EITHER UNAVAILABLE OR WILL CAUSE A DELAY IN CONSTRUCTION COMPLETION SCHEDULE.

32 SEE ARCHITECTURAL PLAN FOR EXITING.

33 SEE ELECTRICAL PLANS FOR J-HOOK DETAILS AND ROUTING.

34 ELECTRICAL CIRCUITS SHOWN IN THIS SET ARE FOR REFERENCE ONLY AND PROVIDED AND INSTALLED BY THE ELECTRICAL CONTRACTOR. SEE ELECTRICAL SHEETS FOR CIRCUIT NUMBERS, CIRCUITING AND PANEL LOCATIONS.

35 WHERE CONCRETE FLOORS ARE TO BE CORED, AN X-RAY MACHINE SHALL BE USED TO INSURE THAT NO STRUCTURAL ELEMENTS (E.G. REBAR) WILL BE COMPROMISED OR DAMAGED.

36 PENETRATIONS THROUGH THE FIRE RATED FLOORS AND WALLS SHALL BE PROTECTED IN ACCORDANCE WITH CBC SECTIONS 709.6 AND 710.1. SYSTEMS SHALL BE INSTALLED IN ACCORDANCE WITH MANUFACTURE'S INSTALLATIONS INSTRUCTIONS AND APPROVED LISTING. MANUFACTURE'S INSTALLATION INSTRUCTIONS AND APPROVED LISTINGS SHALL BE PROVIDED FOR REVIEW BY INSPECTION AUTHORITIES. SUBSTITUTIONS OF OR REVISIONS OR ADDITIONS TO APPROVED SYSTEMS SHALL BE SUBMITTED TO THE OSHPD FIRE MARSHAL (IF REQUIRED) AND THE INSPECTOR OF RECORD FOR REVIEW AND APPROVAL. REFER TO DETAILS FOR FLOOR AND WALL PENETRATION DETAILS.

SCOPE OF WORK

1 CONTRACTOR SHALL PROVIDE, INSTALL AND PROGRAM A COMPLETELY FUNCTIONAL AND OPERATIONAL SYSTEM AS SHOWN ON DRAWINGS AND SPECIFICATIONS.

2 CONTRACTOR SHALL PROVIDE A PHASED INSTALLATION OF THE ELECTRONIC SECURITY BASED ON THE OWNER AND GENERAL CONTRACTOR'S SCHEDULE.

3 CONTRACTOR SHALL PROVIDE AND INSTALL ALL WIRING, DEVICES, CONNECTIONS, PROGRAMMING, AND COORDINATION REQUIRED FOR A COMPLETELY FUNCTIONAL AND OPERATIONAL SYSTEM. CONTRACTOR SHALL PROVIDE ANY CUSTOM BACKBOXES REQUIRED.

4 INCLUDE FINAL CONNECTION, PROGRAMMING, TRAINING, AND TESTING OF THE WORK TO THE HEAD-END EQUIPMENT.PER THE OWNER'S, SECURITY CONSULTANT AND SPECIFICATION REQUIREMENTS.

5 ATTENDANCE AT CONSTRUCTION COORDINATION MEETINGS PER THE GENERAL CONTRACTORS SCHEDULE AND REQUIREMENTS.

6 COORDINATION OF WORK WITH OTHER DESIGN AND INSTALLATION TRADES.

7 INSTALL END-OF-LINE (EOL) RESISTORS AS REQUIRED. EOL'S SHALL BE INSTALLED AT THE INDIVIDUAL POINTS OF PROTECTION NOT AT THE PANEL OR POPIT MODULES.

HGA
1918 Main Street, Third Floor
Santa Monica, California 90405
Telephone 310.557.7600

STRUCTURAL ENGINEER
SAIFUL BOUQUET
155 N LAKE AVE
PASADENA, CA 91101
626-304-2616

MECHANICAL & PLUMBING ENGINEER
STANTEC CONSULTING INC
14130 RIVERSIDE DR. # 201
SHERMAN OAKS, CA 91423
818-377-8220

ELECTRICAL ENGINEER
FBA ENGINEERING
150 PAULARINO AVE. #A120
COSTA MESA, CA 92626
949-852-9995

CIVIL ENGINEER
KPFF CONSULTING ENGINEERS
700 SOUTH FLOWER ST. #2100
LOS ANGELES, CA 90017
213-418-0201

LANDSCAPE ARCHITECT
LYNN CAPOUYA, INC.
17992 MITCHELL SOUTH, #110
IRVINE, CA 92614
949-756-0150

LABORATORY CONSULTANT
RESEARCH FACILITIES DESIGN
3965 FIFTH AVE. #400
SAN DIEGO, CA 92103
619-297-0159

SCIENCE CENTER
SANTA ANA COLLEGE
RANCHO SANTIAGO COMMUNITY COLLEGE DISTRICT
1530 W. 17TH ST.
SANTA ANA, CA 92706

SANTA ANA COLLEGE

I HEREBY CERTIFY THAT THIS PLAN, SPECIFICATION OR REPORT WAS PREPARED BY ME OR UNDER MY DIRECT SUPERVISION AND THAT I AM A DULY LICENSED ARCHITECT UNDER THE LAWS OF THE STATE OF

LICENSED ARCHITECT JAMES G. MATSON C13036 SEPTEMBER 30, 2017 RENEWAL DATE STATE OF CALIFORNIA

NAME:
DATE:
REGISTRATION NUMBER:

NO	DESCRIPTION	DATE
2	ADDENDUM 2	09/01/2017

ISSUANCE HISTORY - THIS SHEET

DRAWN BY: Author REVIEW BY: Approver

HGA NO: 3584-001-00

SECURITY SYMBOLS LEGEND AND SHEET INDEX

DATE: JULY 06, 2017

SE0.01

ADDENDA PACKAGE

© COPYRIGHT HAMMEL, GREEN AND ABRAHAMSON, INC.

Author 8/25/2017 4:09:18 PM C:\Users\ainlong\Documents\Revit Projects\2016\GP-Security-Santa Ana College_ainlong.rvt

(E) STUDENT CENTER
"BLDG. U" - A#: 60155
STATUS: CERTIFIED & CLOSED FILE
N.I.C.

(E) LIBRARY
"BLDG. L" - A#: 35404
STATUS: APPROVED - FULL LETTER
N.I.C.

(E) AUTOSHOP / QUICKCENTER
"BLDG. J" - A#: 16616
STATUS: APPROVED - FULL LETTER
N.I.C.

EXISTING TREE TO REMAIN, REF TO LANDSCAPE DWGS FOR MORE INFO.

GREENHOUSE
OCCUPANCY: U
CONS. TYPE: V-B

SITE WALL ENLARGED PLANS, ELEVATIONS, AND DETAILS SEE

(E) WELDING BOOTHS

(E) WELDING / AUTO DIESEL
"BLDG. K" - A#: 16616
STATUS: APPROVED - FULL LETTER
N.I.C.

ANCHOR VICES ONTO EXISTING CONCRETE. COORDINATE WITH OWNER FOR EXACT LOCATION DURING CONSTRUCTION PHASES. REF TO DETAIL FOR MORE INFO.

SCIENCE CENTER (SC)
OCCUPANCIES: A-3, B, S-1, S2
CONSTRUCTION TYPE: II-B

(E) PARKING LOT 6

SEE CIVIL FOR PARKING LAYOUT & DETAILS

PARKING
(3 COMPACT
6 ADA SPACES)

(E) PARKING LOT 9

(E) PARKING LOT 9

TYP.

LEV
LEV
LEV
CARPOOL
CARPOOL
CARPOOL

PA

1 SECURITY ELECTRONICS SITE PLAN
1" = 20'-0"

1918 Main Street, Third Floor
Santa Monica, California 90405
Telephone 310.557.7600

STRUCTURAL ENGINEER
SAIFUL BOUQUET
155 N LAKE AVE
PASADENA, CA 91101
626-304-2616

MECHANICAL & PLUMBING ENGINEER
STANTEC CONSULTING INC
14130 RIVERSIDE DR. # 201
SHERMAN OAKS, CA 91423
818-377-8220

ELECTRICAL ENGINEER
FBA ENGINEERING
150 PAULARINO AVE. #A120
COSTA MESA, CA 92626
949-852-9995

CIVIL ENGINEER
KPFF CONSULTING ENGINEERS
700 SOUTH FLOWER ST. #2100
LOS ANGELES, CA 90017
213-418-0201

LANDSCAPE ARCHITECT
LYNN CAPOUYA, INC.
17992 MITCHELL SOUTH, #110
IRVINE, CA 92614
949-756-0150

LABORATORY CONSULTANT
RESEARCH FACILITIES DESIGN
3965 FIFTH AVE. #400
SAN DIEGO, CA 92103
619-297-0159

SCIENCE CENTER
SANTA ANA COLLEGE

RANCHO SANTIAGO COMMUNITY COLLEGE DISTRICT

1530 W. 17TH ST.
SANTA ANA, CA 92706

SANTA ANA COLLEGE

I HEREBY CERTIFY THAT THIS PLAN, SPECIFICATION OR REPORT WAS PREPARED BY ME OR UNDER MY DIRECT SUPERVISION AND THAT I AM A DULY LICENSED ARCHITECT UNDER THE LAWS OF THE STATE OF CALIFORNIA.

NAME:
DATE:
REGISTRATION NUMBER:

NO	DESCRIPTION	DATE
2	ADDENDUM 2	09/01/2017

ISSUANCE HISTORY - THIS SHEET

DRAWN BY: Author | REVIEW BY: Approver

HGA NO: 3584-001-00

SECURITY ELECTRONICS SITE PLAN

DATE: JULY 06, 2017

SE1.11

ADDENDA PACKAGE

© COPYRIGHT HAMMEL, GREEN AND ABRAHAMSON, INC.

Author 8/25/2017 4:09:24 PM C:\Users\ralston\Documents\Revit Projects\2016\GP-Security\Santa Ana College_ralston.rvt

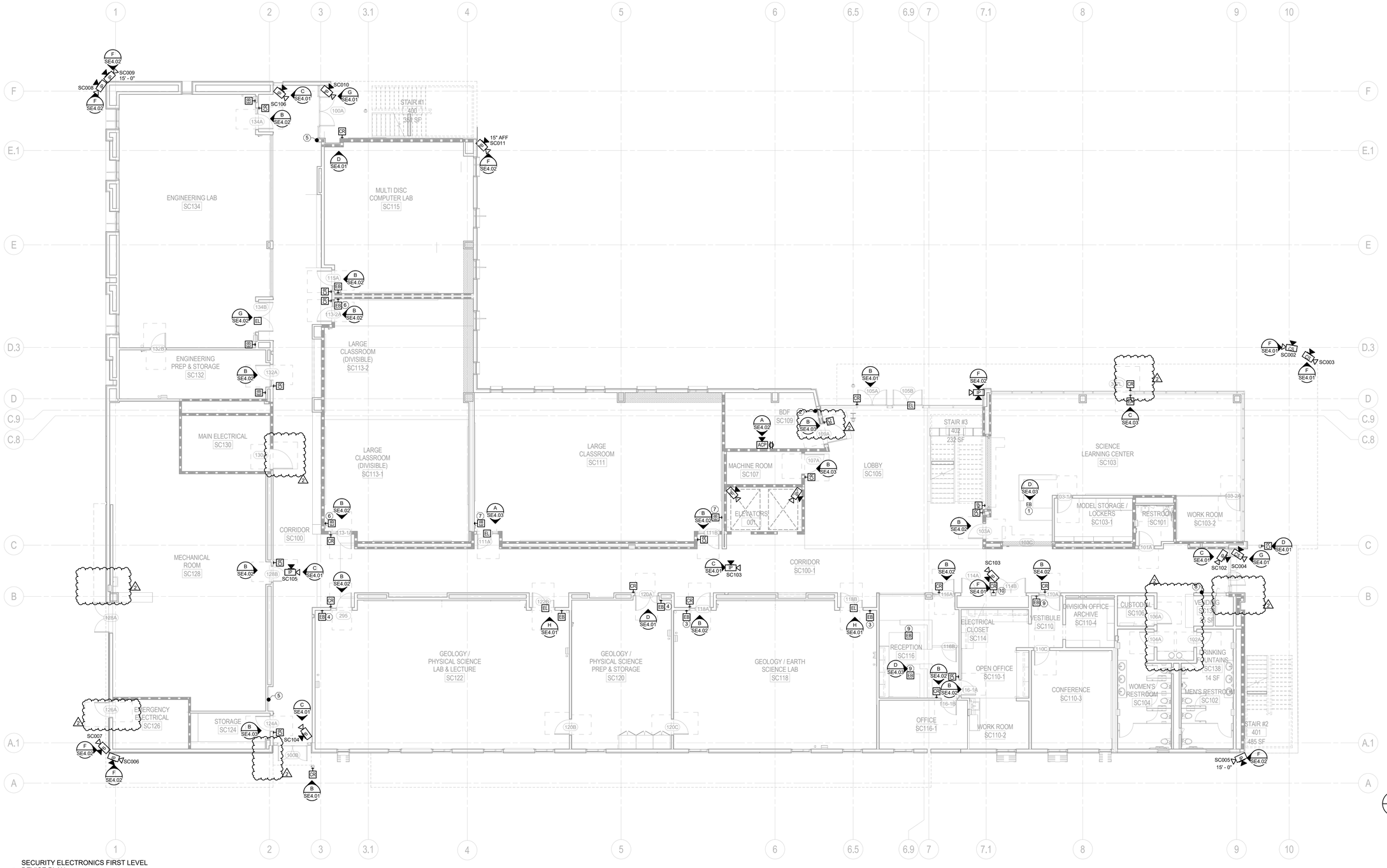

SECURITY ELECTRONICS FIRST LEVEL DEVICE PLAN
1/8" = 1'-0"

KEYNOTES BY SYMBOL '⬡':

1 EMERGENCY BUTTON ASSOCIATED WITH DOORS 103A AND 307L

2 QEL POWER SUPPLY FOR DOOR 105A (BY OTHERS). REFER TO DOOR HARDWARE SCHEDULE AND SPECIFICATIONS. MOUNTED ABOVE CEILING IN 14"HX12"WX4"D PANEL.

3 EMERGENCY BUTTON ASSOCIATED WITH DOORS 11A AND 118B

4 EMERGENCY BUTTON ASSOCIATED WITH DOORS 295 AND 122B

5 QEL POWER SUPPLY FOR DOOR 100A (BY OTHERS). REFER TO DOOR HARDWARE SCHEDULE AND SPECIFICATIONS. MOUNTED ABOVE CEILING IN 14"HX12"WX4"D PANEL.

6 EMERGENCY BUTTON ASSOCIATED WITH DOORS 113-1A AND 113-2A

7 EMERGENCY BUTTON ASSOCIATED WITH DOORS 111A AND 111B

8 QEL POWER SUPPLY FOR DOOR 100-1A (BY OTHERS). REFER TO DOOR HARDWARE SCHEDULE AND SPECIFICATIONS. MOUNTED ABOVE CEILING IN 14"HX12"WX4"D PANEL.

9 EMERGENCY BUTTON ASSOCIATED WITH DOORS 116A AND 110A

10 CARD READ TO CONTROL BOTH DOORS 114A AND 114B

HGA
1918 Main Street, Third Floor
Santa Monica, California 90405
Telephone 310.557.7600

STRUCTURAL ENGINEER
SAIFUL BOUQUET
155 N LAKE AVE
PASADENA, CA 91101
626-304-2616

MECHANICAL & PLUMBING ENGINEER
STANTEC CONSULTING INC
14130 RIVERSIDE DR. # 201
SHERMAN OAKS, CA 91423
818-377-8220

ELECTRICAL ENGINEER
FBA ENGINEERING
150 PAULARINO AVE. #A120
COSTA MESA, CA 92626
949-852-9995

CIVIL ENGINEER
KPFF CONSULTING ENGINEERS
700 SOUTH FLOWER ST. #2100
LOS ANGELES, CA 90017
213-418-0201

LANDSCAPE ARCHITECT
LYNN CAPOUYA, INC.
17992 MITCHELL SOUTH, #110
IRVINE, CA 92614
949-756-0150

LABORATORY CONSULTANT
RESEARCH FACILITIES DESIGN
3965 FIFTH AVE. #400
SAN DIEGO, CA 92103
619-297-0159

SCIENCE CENTER
SANTA ANA COLLEGE

RANCHO SANTIAGO COMMUNITY COLLEGE DISTRICT

1530 W. 17TH ST.
SANTA ANA, CA 92706

SANTA ANA COLLEGE

I HEREBY CERTIFY THAT THIS PLAN, SPECIFICATION OR REPORT WAS PREPARED BY ME OR UNDER MY DIRECT SUPERVISION AND THAT I AM A DULY LICENSED ARCHITECT UNDER THE LAWS OF THE STATE OF

LICENSED ARCHITECT JAMES G. MATTHIESEN SEPTEMBER 30, 2017 EXPIRATION DATE STATE OF CALIFORNIA

NAME:
DATE:
REGISTRATION NUMBER:

NO	DESCRIPTION	DATE
2	ADDENDUM 2	09/01/2017

ISSUANCE HISTORY - THIS SHEET

DRAWN BY: Author | REVIEW BY: Approver

HGA NO: 3584-001-00

SECURITY ELECTRONICS FIRST LEVEL DEVICE PLAN

DATE: JULY 06, 2017

SE2.01

ADDENDA PACKAGE

© COPYRIGHT HAMMEL, GREEN AND ABRAHAMSON, INC.

Author 8/25/2017 4:09:25 PM C:\Users\sinton\Documents\Revit Projects\2016\GP-Security-Santa Ana College_mlaxnard

KEYNOTES BY SYMBOL '○':

hga.
1918 Main Street, Third Floor
Santa Monica, California 90405
Telephone 310.557.7600

STRUCTURAL ENGINEER
SAIFUL BOUQUET
155 N LAKE AVE
PASADENA, CA 91101
626-304-2616

MECHANICAL & PLUMBING ENGINEER
STANTEC CONSULTING INC
14130 RIVERSIDE DR. # 201
SHERMAN OAKS, CA 91423
818-377-8220

ELECTRICAL ENGINEER
FBA ENGINEERING
150 PAULARINO AVE. #A120
COSTA MESA, CA 92626
949-852-9995

CIVIL ENGINEER
KPFF CONSULTING ENGINEERS
700 SOUTH FLOWER ST. #2100
LOS ANGELES, CA 90017
213-418-0201

LANDSCAPE ARCHITECT
LYNN CAPOUYA, INC.
17992 MITCHELL SOUTH, #110
IRVINE, CA 92614
949-756-0150

LABORATORY CONSULTANT
RESEARCH FACILITIES DESIGN
3965 FIFTH AVE. #400
SAN DIEGO, CA 92103
619-297-0159

SCIENCE CENTER
SANTA ANA COLLEGE
RANCHO SANTIAGO COMMUNITY COLLEGE DISTRICT
1530 W. 17TH ST.
SANTA ANA, CA 92706

SANTA ANA COLLEGE

I HEREBY CERTIFY THAT THIS PLAN, SPECIFICATION OR REPORT WAS PREPARED BY ME OR UNDER MY DIRECT SUPERVISION AND THAT I (HGA EMPLOY LICENSED ARCHITECTS/ENGINEERS) AM (ARE) DULY LICENSED UNDER THE LAWS OF THE STATE OF CALIFORNIA

NAME:
DATE:
REGISTRATION NUMBER:

NO	DESCRIPTION	DATE
2	ADDENDUM 2	09/01/2017

ISSUANCE HISTORY - THIS SHEET

DRAWN BY: Author REVIEW BY: Approver

HGA NO: 3584-001-00

SECURITY ELECTRONICS SECOND LEVEL DEVICE PLAN

DATE: JULY 06, 2017

SE2.02

ADDENDA PACKAGE

© COPYRIGHT HAMMEL, GREEN AND ABRAHAMSON, INC.

8/25/2017 4:09:35 PM C:\Users\alinson\Documents\Revit Projects\SV16\SE\Security-Santa Ana College_alinson.rvt Author

1 SECURITY ELECTRONICS THIRD LEVEL DEVICE PLAN
1/8" = 1'-0"

KEYNOTES BY SYMBOL '○':

1918 Main Street, Third Floor
Santa Monica, California 90405
Telephone 310.557.7600

STRUCTURAL ENGINEER
SAIFUL BOUQUET
155 N LAKE AVE
PASADENA, CA 91101
626-304-2616

MECHANICAL & PLUMBING ENGINEER
STANTEC CONSULTING INC
14130 RIVERSIDE DR. # 201
SHERMAN OAKS, CA 91423
818-377-8220

ELECTRICAL ENGINEER
FBA ENGINEERING
150 PAULARINO AVE. #A120
COSTA MESA, CA 92626
949-852-9995

CIVIL ENGINEER
KPFF CONSULTING ENGINEERS
700 SOUTH FLOWER ST. #2100
LOS ANGELES, CA 90017
213-418-0201

LANDSCAPE ARCHITECT
LYNN CAPOUYA, INC.
17992 MITCHELL SOUTH, #110
IRVINE, CA 92614
949-756-0150

LABORATORY CONSULTANT
RESEARCH FACILITIES DESIGN
3965 FIFTH AVE. #400
SAN DIEGO, CA 92103
619-297-0159

SCIENCE CENTER
SANTA ANA COLLEGE

RANCHO SANTIAGO COMMUNITY COLLEGE DISTRICT

1530 W. 17TH ST.
SANTA ANA, CA 92706

SANTA ANA COLLEGE

I HEREBY CERTIFY THAT THIS PLAN, SPECIFICATION OR REPORT WAS PREPARED BY ME OR UNDER MY DIRECT SUPERVISION AND THAT I AM A DULY LICENSED ARCHITECT UNDER THE LAWS OF THE STATE OF

NAME:
DATE:
REGISTRATION NUMBER:

NO	DESCRIPTION	DATE
2	ADDENDUM 2	09/01/2017

ISSUANCE HISTORY - THIS SHEET

DRAWN BY: AI | REVIEW BY: AM

HGA NO: 3584-001-00

SECURITY ELECTRONICS THIRD LEVEL DEVICE PLAN

DATE: JULY 06, 2017

SE2.03

ADDENDA PACKAGE

© COPYRIGHT HAMMEL, GREEN AND ABRAHAMSON, INC.

8/25/2017 4:09:41 PM C:\Users\ailand\Documents\Revit Projects\2016\GP-Security-Santa Ana College_ailand.rvt AI

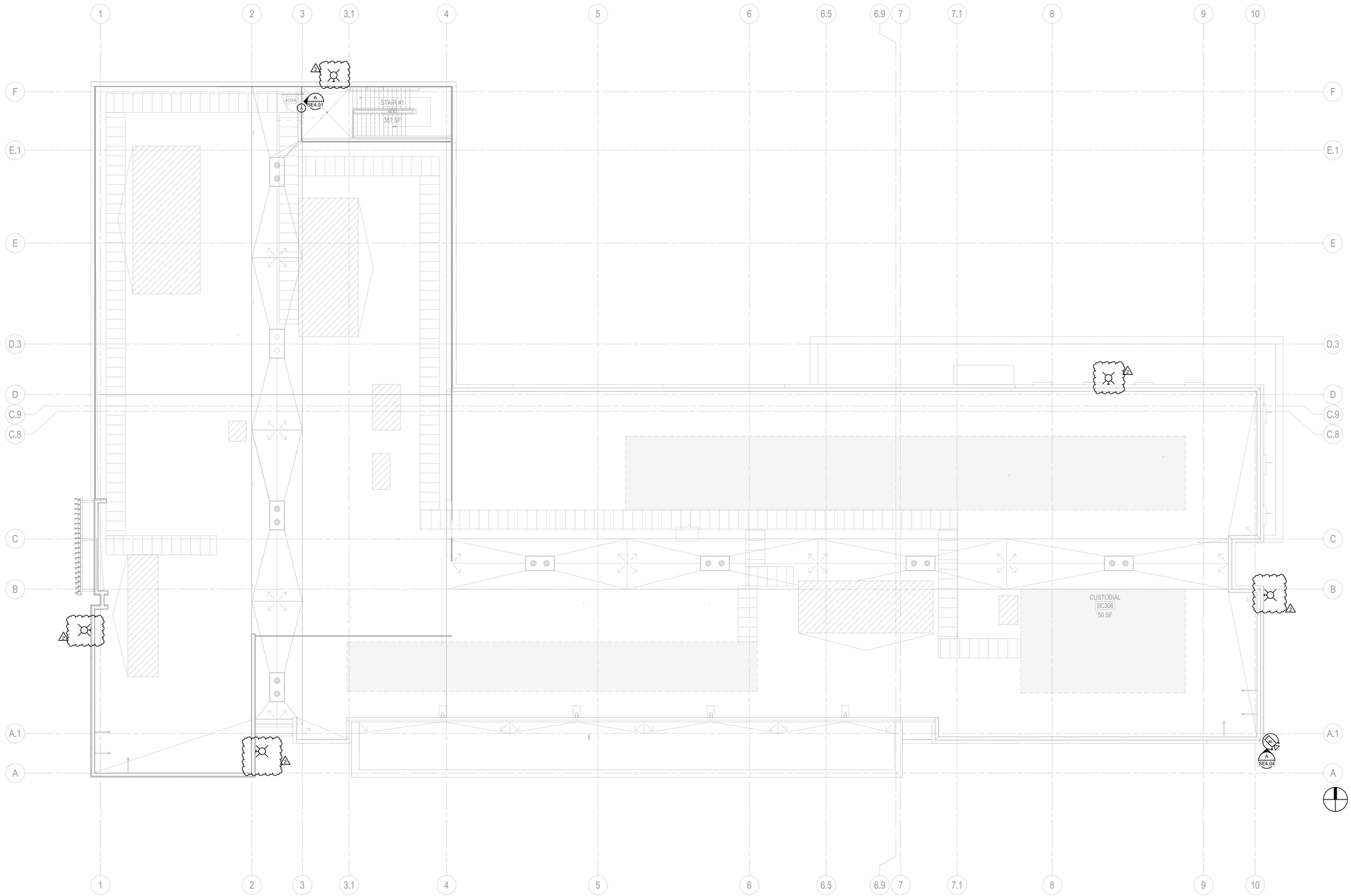

1 SECURITY ELECTRONICS ROOF DEVICE PLAN
1/8" = 1'-0"

hga.
1918 Main Street, Third Floor
Santa Monica , California 90405
Telephone 310.557.7600

STRUCTURAL ENGINEER
SAIFUL BOUQUET
155 N LAKE AVE
PASADENA, CA 91101
626-304-2616

MECHANICAL & PLUMBING ENGINEER
STANTEC CONSULTING INC
14130 RIVERSIDE DR. # 201
SHERMAN OAKS, CA 91423
818-377-8220

ELECTRICAL ENGINEER
FBA ENGINEERING
150 PAULARINO AVE. #A120
COSTA MESA, CA 92626
949-852-9995

CIVIL ENGINEER
KPFF CONSULTING ENGINEERS
700 SOUTH FLOWER ST. #2100
LOS ANGELES, CA 90017
213-418-0201

LANDSCAPE ARCHITECT
LYNN CAPOUYA, INC.
17992 MITCHELL SOUTH, #110
IRVINE, CA 92614
949-756-0150

LABORATORY CONSULTANT
RESEARCH FACILITIES DESIGN
3965 FIFTH AVE. #400
SAN DIEGO, CA 92103
619-297-0159

SCIENCE CENTER
SANTA ANA COLLEGE

RANCHO SANTIAGO COMMUNITY COLLEGE DISTRICT

1530 W. 17TH ST.
SANTA ANA, CA 92706

SANTA ANA COLLEGE

I HEREBY CERTIFY THAT THIS PLAN, SPECIFICATION OR REPORT WAS PREPARED BY ME OR UNDER MY DIRECT SUPERVISION AND THAT I AM A DULY LICENSED ARCHITECT UNDER THE LAWS OF THE STATE OF

JAMES G. MATTHIES
No. 18181
SEPTEMBER 30, 2017
RENEWAL DATE
STATE OF CALIFORNIA

NAME:
DATE:
REGISTRATION NUMBER:

NO	DESCRIPTION	DATE
2	ADDENDUM 2	09/01/2017

ISSUANCE HISTORY - THIS SHEET

DRAWN BY: AI | REVIEW BY: AM

HGA NO: 3584-001-00

SECURITY ELECTRONICS ROOF DEVICE PLAN

DATE: JULY 06, 2017

SE2.04

ADDENDA PACKAGE

© COPYRIGHT HAMMEL, GREEN AND ABRAHAMSON, INC.

AI 8/25/2017 4:09:45 PM C:\Users\ailand\Documents\Revit Projects\2016\GP-Security-Santa Ana College_ailand.rvt

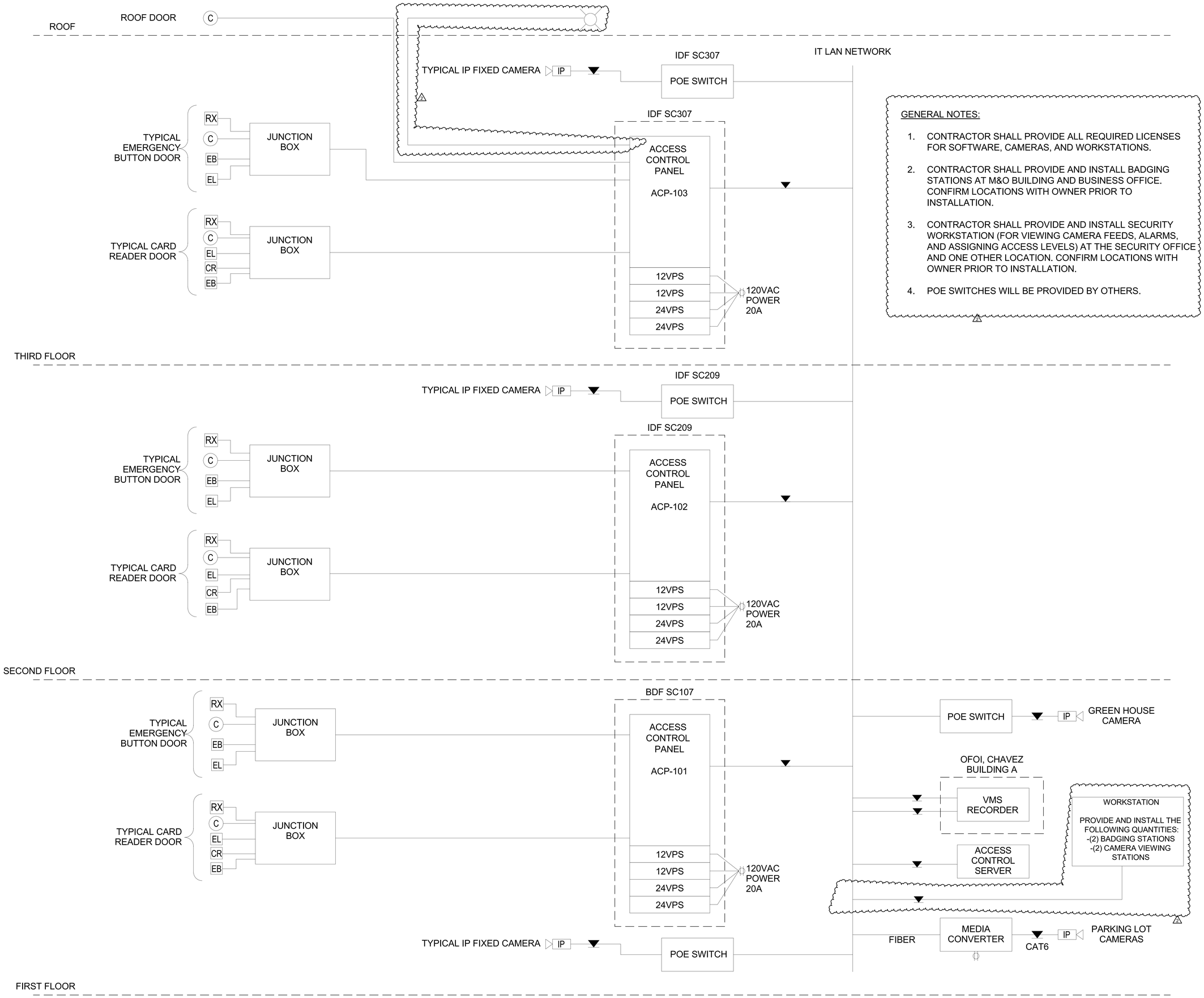

GENERAL NOTES:

1. CONTRACTOR SHALL PROVIDE ALL REQUIRED LICENSES FOR SOFTWARE, CAMERAS, AND WORKSTATIONS.
2. CONTRACTOR SHALL PROVIDE AND INSTALL BADGING STATIONS AT M&O BUILDING AND BUSINESS OFFICE. CONFIRM LOCATIONS WITH OWNER PRIOR TO INSTALLATION.
3. CONTRACTOR SHALL PROVIDE AND INSTALL SECURITY WORKSTATION (FOR VIEWING CAMERA FEEDS, ALARMS, AND ASSIGNING ACCESS LEVELS) AT THE SECURITY OFFICE AND ONE OTHER LOCATION. CONFIRM LOCATIONS WITH OWNER PRIOR TO INSTALLATION.
4. POE SWITCHES WILL BE PROVIDED BY OTHERS.

HGA
1918 Main Street, Third Floor
Santa Monica, California 90405
Telephone 310.557.7600

STRUCTURAL ENGINEER
SAIFUL BOUQUET
155 N LAKE AVE
PASADENA, CA 91101
626-304-2616

MECHANICAL & PLUMBING ENGINEER
STANTEC CONSULTING INC
14130 RIVERSIDE DR. # 201
SHERMAN OAKS, CA 91423
818-377-8220

ELECTRICAL ENGINEER
FBA ENGINEERING
150 PAULARINO AVE. #A120
COSTA MESA, CA 92626
949-852-9995

CIVIL ENGINEER
KPFF CONSULTING ENGINEERS
700 SOUTH FLOWER ST. #2100
LOS ANGELES, CA 90017
213-418-0201

LANDSCAPE ARCHITECT
LYNN CAPOUYA, INC.
17992 MITCHELL SOUTH, #110
IRVINE, CA 92614
949-756-0150

LABORATORY CONSULTANT
RESEARCH FACILITIES DESIGN
3965 FIFTH AVE. #400
SAN DIEGO, CA 92103
619-297-0159

SCIENCE CENTER
SANTA ANA COLLEGE
RANCHO SANTIAGO COMMUNITY COLLEGE DISTRICT
1530 W. 17TH ST.
SANTA ANA, CA 92706

SANTA ANA COLLEGE

I HEREBY CERTIFY THAT THIS PLAN, SPECIFICATION OR REPORT WAS PREPARED BY ME OR UNDER MY DIRECT SUPERVISION AND THAT I AM A DULY LICENSED CARDIFFEE/INTERSTATE/ENGINEER/LANDSCAPE ARCHITECT OF THE STATE OF

NAME:
DATE:
REGISTRATION NUMBER:

NO	DESCRIPTION	DATE
2	ADDENDUM 2	09/01/2017

ISSUANCE HISTORY - THIS SHEET
DRAWN BY: Author | REVIEW BY: Approver

HGA NO: 3584-001-00

SECURITY ELECTRONICS RISERS DIAGRAM

DATE: JULY 06, 2017

SE3.01

ADDENDA PACKAGE

© COPYRIGHT HAMMEL, GREEN AND ABRAHAMSON, INC.

Author 8/25/2017 4:09:46 PM C:\Users\ainlong\Documents\Revit Projects\2016\GP-Security-Santa Ana College_ainlong.rvt

Electronic Access Control System Schedule

SAC STEM (SE2-01)

Access Point	Device Number	Location	Reader Type	Mount Style	Wire Group	Notes	Door Detail	Priority
1	100A	NORTH ENTRY DOOR	SMART CARD	WALL	C		SE4.01/ D	High
2	134A	ENGINEERING LAB-SC134	SMART CARD	MULLION	C		SE4.02/ B	High
3	134B	ENGINEERING LAB-SC134	LOCK ONLY	N/A	C		SE4.02/ G	High
4	115A	MULTI DISC COMPUTER LAB-SC115	SMART CARD	MULLION	C		SE4.02/ B	High
5	113-2A	LARGE CLASSROM-SC113-2	SMART CARD	MULLION	C		SE4.02/ B	High
6	132A	ENGINEERING PREP 7 STORAGE-SC132	SMART CARD	MULLION	C		SE4.02/ G	High
7	130A	MAIN ELECTRICAL ROOM	SMART CARD	N/A	C		SE4.03/ B	High
8	100B	SOUTH ENTRY DOOR	SMART CARD	WALL	C		SE4.01/ B	High
9	295	GEOLOGY/PHYSICAL LAB & LECTURE-SC122	SMART CARD	MULLION	C		SE4.02/ B	High
10	122B	GEOLOGY/PHYSICAL LAB & LECTURE-SC122	LOCK ONLY	N/A	C		SE4.01/ H	High
11	113-1A	LARGE CLASSROM-SC113-1	SMART CARD	MULLION	C		SE4.02/ B	High
12	111-A	LARGE CLASSROM-SC111	LOCK ONLY	N/A	C		SE4.03/ A	High
13	111-B	LARGE CLASSROM-SC111	SMART CARD	MULLION	C		SE4.02/ B	High
14	120A	GEOLOGY/PHYSICAL-SC120	SMART CARD	WALL	C		SE4.01/ D	High
15	118A	GEOLOGY/PHYSICAL LAB & LECTURE-SC118	SMART CARD	MULLION	C		SE4.02/ B	High
16	118B	GEOLOGY/PHYSICAL LAB & LECTURE-SC118	LOCK ONLY	N/A	C		SE4.01/ H	High
17	109A	BDF-SC109	SMART CARD	WALL	C		SE4.02/ B	High
18	107A	MACHINE ROOM	SMART CARD	WALL	C		SE4.03/ B	High
19	105A	MAIN ENTRY DOOR	LOCK ONLY	N/A	C		SE4.03/ B	High
20	105B	MAIN ENTRY DOOR	SMART CARD	WALL	C		SE4.01/ B	High
21	103A	SCIENCE LEARNING CENTER-SC103	SMART CARD	WALL	C		SE4.02/ B	High
22	307L	EXIT DOOR-SC103	SMART CARD	WALL	C		SE4.02/ B	High
23	114A	ELECTRICAL CLOSET	SMART CARD	WALL	C	1	SE4.03/ B	High
24	114B	ELECTRICAL CLOSET	SMART CARD	WALL	C	1	SE4.03/ B	High
25	116A	RECEPTION-SC116	SMART CARD	MULLION	C		SE4.02/ B	High
26	110A	VETIBULE-SC110	SMART CARD	WALL	C		SE4.02/ B	High
27	116-1A	OPEN OFFICE-SC110-1	SMART CARD	WALL	C		SE4.02/ B	High
28	116-1B	OFFICE-SC116-1	SMART CARD	WALL	C		SE4.02/ B	High
29	100-1A	EAST ENTRY DOOR	SMART CARD	WALL	C		SE4.01/ D	High
30	SC001A	GREENHOUSE ENTRY DOOR	SMART CARD	WALL	C		SE4.01/ F	High
31	SC001B	GREENHOUSE NORTH GATE	SMART CARD	WALL	C		SE4.04/ B	High
32	SC001C	GREENHOUSE SOUTH GATE	SMART CARD	WALL	C		SE4.04/ B	High

Wire Schedule

C	REFER TO CABLE ID LEGEND

Notes

GENERAL	25 CARD READERS (2)
	6 ELECTRFIED LOCK
1	BOTH DOORS CONTROLLED BY ONE CARD READER (2)

SAC STEM (SE2-02)

Access Point	Device Number	Location	Reader Type	Mount Style	Wire Group	Notes	Door Detail	Priority
1	200A	NORTH ENTRY DOOR	SMART CARD	WALL	C		SE4.01/ D	High
2	226A	ORGANISMAL BIOLOGY LAB-SC226	SMART CARD	MULLION	C		SE4.01/ B	High
3	226B	ORGANISMAL BIOLOGY LAB-SC226	LOCK ONLY	N/A	C		SE4.02/ H	High
4	217A	ANATOMY LAB-SC217	SMART CARD	MULLION	C		SE4.01/ B	High
5	217B	ANATOMY LAB-SC217	LOCK ONLY	N/A	C		SE4.02/ H	High
6	222A	GENERAL & ORG PREP	SMART CARD	WALL	C		SE4.01/ B	High
7	218A	GENERAL BIOLOGY LAB-SC218	LOCK ONLY	N/A	C		SE4.02/ B	High
8	218B	GENERAL BIOLOGY LAB-SC218	SMART CARD	WALL	C		SE4.02/ H	High
9	216A	MICROBIOLOGY-SC216	LOCK ONLY	N/A	C		SE4.02/ H	High
10	216B	MICROBIOLOGY-SC216	SMART CARD	MULLION	C		SE4.01/ B	High
11	215A	ANATOMY PREPLAB-SC215	SMART CARD	MULLION	C		SE4.01/ B	High
12	213A	PHYSIOLOGY LAB-SC213	LOCK ONLY	N/A	C		SE4.02/ H	High
13	213B	PHYSIOLOGY LAB-SC213	SMART CARD	MULLION	C		SE4.01/ B	High
14	214A	MOLECULAR BIO PREP-SC214	SMART CARD	WALL	C		SE4.02/ D	High
15	212A	MOLECULAR BIO LAB-SC212	LOCK ONLY	N/A	C		SE4.02/ H	High
16	212B	MOLECULAR BIO LAB-SC212	SMART CARD	MULLION	C		SE4.01/ B	High
17	211A	IDF-SC211	SMART CARD	WALL	C		SE4.01/ B	High
18	201B	OFFICE-SC201	SMART CARD	WALL	C		SE4.01/ B	High
19	201-7A	OFFICE-SC201-7	SMART CARD	WALL	C		SE4.01/ B	High
20	201-6A	OFFICE-SC201-6	SMART CARD	WALL	C		SE4.01/ B	High
21	201-5A	OFFICE-SC201-5	SMART CARD	WALL	C		SE4.01/ B	High
22	201-4A	OFFICE-SC201-4	SMART CARD	WALL	C		SE4.01/ B	High
23	201-3A	OFFICE-SC201-3	SMART CARD	WALL	C		SE4.01/ B	High
24	201-2A	OFFICE-SC201-2	SMART CARD	WALL	C		SE4.01/ B	High
25	201-1A	OFFICE-SC201-1	SMART CARD	WALL	C		SE4.01/ B	High
26	201A	OFFICE-SC201	SMART CARD	WALL	C		SE4.01/ B	High
27	208A	CLASSROOM-SC208	SMART CARD	MULLION	C		SE4.01/ B	High
28	200-1A	EAST ENTRY DOOR	SMART CARD	WALL	C		SE4.01/ D	High

Wire Schedule

C	REFER TO CABLE ID LEGEND

Notes

GENERAL (2)	23 CARD READERS
	6 ELECTRFIED LOCK

SAC STEM (SE2-03)

Access Point	Device Number	Location	Reader Type	Mount Style	Wire Group	Notes	Door Detail	Priority
1	300A	NORTH ENTRY DOOR	SMART CARD	WALL	C		SE4.01/ D	High
2	326A	CHEMISRTY LAB-SC326	SMART CARD	MULLION	C		SE4.02/ B	High
3	326B	CHEMISRTY LAB-SC326	LOCK ONLY	N/A	C		SE4.02/ H	High
4	315A	CHEMISRTY LAB-SC315	SMART CARD	MULLION	C		SE4.02/ B	High
5	315B	CHEMISRTY LAB-SC315	LOCK ONLY	N/A	C		SE4.02/ H	High
8	322B	CENTRALIZED PREP & STORAGE-SC322	SMART CARD	WALL	C		SE4.02/ D	High
9	320A	ORGANIC CHENISTRY LAB-SC320	SMART CARD	WALL	C		SE4.02/ B	High
10	320B	INSTRUMENT ROOM	SMART CARD	WALL	C		SE4.02/ B	High
11	318A	CHEMISTRY PREP & STORAGE-SC318	SMART CARD	WALL	C		SE4.02/ B	High
12	316A	CHEMISTY LAB-SC316	SMART CARD	MULLION	C		SE4.02/ B	High
13	316B	CHEMISTY LAB-SC316	LOCK ONLY	N/A	C		SE4.02/ H	High
14	311A	WASTE-SC311	SMART CARD	WALL	C		SE4.02/ B	High
15	313A	CHEMISTRY PREP & STORAGE-SC313	SMART CARD	WALL	C		SE4.02/ B	High
16	309A	CHEMISTY LAB-SC309	SMART CARD	MULLION	C		SE4.02/ B	High
17	309B	CHEMISTY LAB-SC309	LOCK ONLY	N/A	C		SE4.02/ H	High
18	314A	PHYSICS PREP & STORAGE	SMART CARD	WALL	C		SE4.02/ H	High
19	307A	IDF-SC307	SMART CARD	WALL	C		SE4.02/ B	High
20	312A	PHYSICS LAB-SC312	SMART CARD	MULLION	C		SE4.02/ B	High
21	312B	PHYSICS LAB-SC312	LOCK ONLY	N/A	C		SE4.02/ H	High
22	301B	OFFICE-SC301	SMART CARD	WALL	C		SE4.02/ B	High
23	301-7A	OFFICE-SC301-7	SMART CARD	WALL	C		SE4.02/ B	High
24	301-6A	OFFICE-SC301-6	SMART CARD	WALL	C		SE4.02/ B	High
25	301-5A	OFFICE-SC301-5	SMART CARD	WALL	C		SE4.02/ B	High
26	301-4A	OFFICE-SC301-4	SMART CARD	WALL	C		SE4.02/ B	High
27	301-3A	OFFICE-SC301-3	SMART CARD	WALL	C		SE4.02/ B	High
28	301-2A	OFFICE-SC301-2	SMART CARD	WALL	C		SE4.02/ B	High
29	301-1A	OFFICE-SC301-1	SMART CARD	WALL	C		SE4.02/ B	High
30	301A	OFFICE-SC301	SMART CARD	MULLION	C		SE4.02/ B	High
31	308A	CLASSROOM-SC308	SMART CARD	MULLION	C		SE4.02/ B	High
32	300B	EAST ENTRY DOOR	SMART CARD	WALL	C		SE4.01/ D	High

Wire Schedule

C	REFER TO CABLE ID LEGEND

Notes

GENERAL	26 CARD READERS (2)
	5 ELECTRFIED LOCK

System Camera Schedule

SAC STEM CAMERA SCHEDULE

Camera Number	Device Number	Camera Type	Intended View	Drawing Number	Mount Style	Detail Number	Camera Height	Termination Point	Wire Group	Notes	Priority
1											
2	SC002	Exterior Surface/Flush MiniDome	NORTHEAST TO WEST	SE2.01	Surface	SE4.02/ G	N/A	Nearest TR	H		High
3	SC003	Exterior Surface/Flush MiniDome	NORTHEAST TO SOUTH	SE2.01	Surface	SE4.02/ G	N/A	Nearest TR	H		High
4	SC004	Exterior Surface/Flush MiniDome	EAST STAIRWAY	SE2.01	Surface	SE4.02/ G	N/A	Nearest TR	H		High
5	SC005	Exterior Bullet IP Fixed	SOUTHEAST TO WEST	SE2.01	Wall	SE4.02/ F	15'	Nearest TR	H		High
6	SC006	Exterior Surface/Flush MiniDome	SOUTHWEST TO EAST	SE2.01	Surface	SE4.02/ G	N/A	Nearest TR	H		High
7	SC007	Exterior Bullet IP Fixed	SOUTHWEST TO NORTH	SE2.01	Wall	SE4.02/ F	15	Nearest TR	H		High
8	SC008	Exterior Bullet IP Fixed	NORTHWEST TO SOUTH	SE2.01	Wall	SE4.02/ F	15	Nearest TR	H		High
9	SC009	Exterior Bullet IP Fixed	NORTHWEST TO EAST	SE2.01	Wall	SE4.02/ F	15'	Nearest TR	H		High
10	SC010	Exterior Bullet IP Fixed	NORTH STAIRWAY	SE2.01	Wall	SE4.02/ F	N/A	Nearest TR	H		High
11	SC011	Exterior Bullet IP Fixed	NORTHWEST TO MAIN ENTRANCE	SE2.01	Wall	SE4.02/ F	15	Nearest TR	H		High
12	SC012	Exterior Bullet IP Fixed	NORTHWEST GREENHOUSE	SE1.11	Wall	SE4.02/ F	N/A	Nearest TR	H		High
13	SC013	Exterior Bullet IP Fixed	SOUTHEAST GREENHOUSE	SE1.11	Wall	SE4.02/ F	N/A	Nearest TR	H		High
14											
15	SC102	Interior Surface/Flush MiniDome	EAST ENTRANCE	SE2.01	Surface	SE4.01/ C	N/A	Nearest TR	H		High
16	SC103	Interior Surface/Flush MiniDome	CORRIDOR-SC100-1	SE2.01	Surface	SE4.01/ C	N/A	Nearest TR	H		High
17	SC104	Interior Surface/Flush MiniDome	SOUTH ENTRANCE	SE2.01	Surface	SE4.01/ C	N/A	Nearest TR	H		High
18	SC105	Interior Surface/Flush MiniDome	CORRIDOR-SC100	SE2.01	Surface	SE4.01/ C	N/A	Nearest TR	H		High
19	SC106	Interior Surface/Flush MiniDome	NORTH ENTRANCE	SE2.01	Surface	SE4.01/ C	N/A	Nearest TR	H		High
20	SC201	Interior Surface/Flush MiniDome	CORRIDOR-SC207	SE2.02	Surface	SE4.01/ C	N/A	Nearest TR	H		High
21											
22	SC203	Interior Surface/Flush MiniDome	EAST ENTRANCE	SE2.02	Surface	SE4.01/ C	N/A	Nearest TR	H		High
23	SC204	Exterior Surface/Flush MiniDome	EAST ENTRANCE (EXT)	SE2.02	Surface	SE4.01/ E	N/A	Nearest TR	H		High
24	SC205	Interior Surface/Flush MiniDome	CORRIDOR-SC200-1	SE2.02	Surface	SE4.01/ C	N/A	Nearest TR	H		High
25	SC206	Interior Surface/Flush MiniDome	SOUTH CORRIDOR	SE2.02	Surface	SE4.01/ C	N/A	Nearest TR	H		High
26	SC207	Interior Surface/Flush MiniDome	CORRIDOR-SC200-1	SE2.02	Surface	SE4.01/ C	N/A	Nearest TR	H		High
27	SC208	Interior Surface/Flush MiniDome	NORTH ENTRANCE	SE2.02	Surface	SE4.01/ C	N/A	Nearest TR	H		High
28	SC209	Exterior Surface/Flush MiniDome	NORTH ENTRANCE (EXT)	SE2.02	Surface	SE4.01/ E	N/A	Nearest TR	H		High
29	SC301	Interior Surface/Flush MiniDome	IDF AREA	SE2.03	Surface	SE4.01/ C	N/A	Nearest TR	H		High
30											
31	SC303	Interior Surface/Flush MiniDome	EAST ENTRANCE	SE2.03	Surface	SE4.01/ C	N/A	Nearest TR	H		High
32	SC304	Exterior Surface/Flush MiniDome	EAST ENTRANCE (EXT)	SE2.03	Surface	SE4.01/ E	N/A	Nearest TR	H		High
33	SC305	Interior Surface/Flush MiniDome	CORRIDOR-SC300-1	SE2.03	Surface	SE4.01/ C	N/A	Nearest TR	H		High
34	SC306	Interior Surface/Flush MiniDome	SOUTH CORRIDOR	SE2.03	Surface	SE4.01/ C	N/A	Nearest TR	H		High
35	SC307	Interior Surface/Flush MiniDome	CORRIDOR-SC300-1	SE2.03	Surface	SE4.01/ C	N/A	Nearest TR	H		High
36	SC308	Interior Surface/Flush MiniDome	NORTH ENTRANCE	SE2.03	Surface	SE4.01/ C	N/A	Nearest TR	H		High
37	SC309	Exterior Surface/Flush MiniDome	NORTH ENTRANCE (EXT)	SE2.03	Surface	SE4.01/ E	N/A	Nearest TR	H		High

Wire Schedule

H	CAT6A

Notes

GENERAL	
1	
2	
3	

HGA
1918 Main Street, Third Floor
Santa Monica, California 90405
Telephone 310.557.7600

STRUCTURAL ENGINEER
SAIFUL BOUQUET
155 N LAKE AVE
PASADENA, CA 91101
626-304-2616

MECHANICAL & PLUMBING ENGINEER
STANTEC CONSULTING INC
14130 RIVERSIDE DR. # 201
SHERMAN OAKS, CA 91423
818-377-8220

ELECTRICAL ENGINEER
FBA ENGINEERING
150 PAULARINO AVE. #A120
COSTA MESA, CA 92626
949-852-9995

CIVIL ENGINEER
KPFF CONSULTING ENGINEERS
700 SOUTH FLOWER ST. #2100
LOS ANGELES, CA 90017
213-418-0201

LANDSCAPE ARCHITECT
LYNN CAPOUYA, INC.
17992 MITCHELL SOUTH, #110
IRVINE, CA 92614
949-756-0150

LABORATORY CONSULTANT
RESEARCH FACILITIES DESIGN
3965 FIFTH AVE. #400
SAN DIEGO, CA 92103
619-297-0159

SCIENCE CENTER
SANTA ANA COLLEGE

RANCHO SANTIAGO COMMUNITY COLLEGE DISTRICT

1530 W. 17TH ST.
SANTA ANA, CA 92706

SANTA ANA COLLEGE

I HEREBY CERTIFY THAT THIS PLAN, SPECIFICATION OR REPORT WAS PREPARED BY ME OR UNDER MY DIRECT SUPERVISION AND THAT I AM A DULY LICENSED ARCHITECT UNDER THE LAWS OF THE STATE OF

LICENSED ARCHITECT JAMES G. MATSON C-13036 SEPTEMBER 30, 2017 RENEWAL DATE STATE OF CALIFORNIA

NAME:
DATE:
REGISTRATION NUMBER:

NO	DESCRIPTION	DATE
2	ADDENDUM 2	09/01/2017

ISSUANCE HISTORY - THIS SHEET

DRAWN BY: Author | REVIEW BY: Approver

HGA NO: 3584-001-00

SECURITY ELECTRONICS ACCESS CTRL. AND CAMERA SCHEDULES

DATE: JULY 06, 2017

SE5.01

ADDENDA PACKAGE

© COPYRIGHT HAMMEL, GREEN AND ABRAHAMSON, INC.

Author 8/25/2017 4:09:48 PM C:\Users\ainlong\Documents\Revit Projects\2016\GP-Security-Santa Ana College_ainlong.rvt

SCIENCE CENTER
SANTA ANA COLLEGE
SANTA ANA, CA

GENERAL NOTES

REFER TO AUDIO VISUAL SPECIFICATION SECTION FOR COMPLETE REQUIREMENTS

1. ELECTRICAL

A. All conduits, junction boxes, back boxes, pull string and power outlets by Division 26 contractor as required.
B. All power to AV equipment to originate from dedicated audio video load center in accordance with the latest local and national codes referencing "technical power systems", NEC Article 640.
C. Branch circuits feeding audio-visual equipment must not originate from load centers connected to inductive loads.
D. Provide all AV circuits with isolated ground, dedicated neutral.

2. COORDINATE

A. Coordinate with the work of all sections. Coordinate the location of blocking and backing required by this section. Make reasonable minor adjustments to preserve architectural symmetry and alignment with adjacent features at no claim for additional cost or time. Present conflicts in timely manner for resolution.
B. Relocation, revision or correction caused by failure of the contractor to coordinate the work shall not be subject to claim for additional cost or time.
C. Power receptacles shown on the AV drawings outside of equipment racks are shown for coordination information only. Refer to Division 26 documents for construction.
D. These drawings show scope. The exact location & elevations of loudspeakers, receptacles and devices must be coordinated with the architectural drawings.
E. Conduit, back boxes and pull boxes supplied and installed by electrical contractor under supervision of AV contractor.
F. General contractor shall coordinate the conduit, devices, pathways and junction boxes for the AV system with other trade to avoid any conflicts.

3. LOCATIONS AND DIMENSIONS

A. Locations and dimensions shown on architectural drawings take precedence over these AV drawings. In case of apparent conflict or ambiguity, submit to the Architect in timely manner for resolution.
B. Dimensions take precedence over scale. Large scale drawings take precedence over small. Report all conflicts before installation.
C. Unless otherwise noted, dimensions are shown height x width x depth.
D. Verify all dimensions, locations and conditions in the field prior to starting work. Notify Architect of any apparent discrepancies.

4. SUPPORT

Provide all blocking, bridging, ties, fasteners and related support provisions for all work of this section. Comply with applicable code requirements for means of support of electrical equipment of the same weight under the same mounting conditions. Do not apply any load to building structure without first obtaining written approval of the project Structural Engineer. Obtain per project procedures. Supports for raceway system by Division 26 contractor.

5. BOX, PANEL AND ENCLOSURE INSTALLATION

A. Coordinate the location of all boxes, panels, enclosures and related raceway with the work of other sections.
B. Verify access to boxes, panels and enclosures comply with applicable code.
C. Coordinate and correct all conditions of occlusion of all loudspeaker assemblies. Where more than one (1) flush mounted ceiling loudspeaker has been scheduled, none shall be located closer to any fixed wall than one-half (1/2) of the adjacent clear height, except at ceiling discontinuities, or where specifically shown on the drawings.
D. Install boxes, panels and enclosures square and plumb. Set flush mounted units so that the face of the cover, Bezel or Escutcheon, is in the same plane as the surrounding finished surface. Mount boxes, panels and trim so that there are no gaps, cracks or obvious lines between the trim and the adjacent finished surface.
E. Unless otherwise need, provide steel boxes, panels and enclosures. Comply with Division 26 requirements and applicable code.
F. Unless otherwise noted, boxes and enclosures shall be not less than 2-1/8 inches deep. Provide the larger of the size required by applicable code or as shown on drawings. Coordinate wire and cable bend radius with box and enclosure size.
G. Pull boxes: Provide as required by the most restrictive of applicable code or the provisions of Division 26. Coordinate with wire and cable bend radius.
H. Provide required fire rated junction boxes or fire stop box guards at all fire rated walls.
I. Conduit and accessories must be installed plumb and true with uniform fastening, fully dressed and finished.

6. RACEWAY

A. For all work of this section, raceway above ground shall be EMT, raceway below ground shall be PVC.
B. Raceway shall be ¾ inch diameter trade size unless otherwise noted.
C. All conduit runs over 100 ft. must have large radius bends.
D. A maximum of two 90 degree elbows in each conduit run.
E. Conduit with fiber optic cable installed, must conform to the minimum bend radius as specified by the manufacturer of the cable. Division 26 contractor is to apply radius bends where needed. Fiber bend radius shall be a minimum long-term low-stress radius not less than 20 times the cable diameter.
F. Keep a minimum of 12" clear between electrical conduit and low voltage conduit.
G. Provide fire rated conduit penetration seals at all fire rated walls.
H. Conduit and accessories must be installed plumb and true with uniform fastening, fully dressed and finished.

7. GROUNDING AND BONDING

Comply with all applicable codes and ordinances. Refer to National Electrical Code Section 250.

A. Bond raceway and related boxes, panels, enclosures and cabinets as required by applicable code and Division 26.
B. Make raceway connections to equipment racks and similar equipment enclosures containing powered equipment with isolated fittings.
C. Ground and bond equipment racks and similar equipment enclosures containing powered equipment exclusively via the isolated equipment grounding conductors provided under Division 26. Size such conductors according to applicable code. For each technical branch circuit, the isolated equipment grounding conductor shall be copper of the same gauge as supply and neutral conductors. Main isolated equipment grounding conductor to each ensemble of equipment racks shall be copper, sized as required by applicable code.
D. D.C. resistance between the isolated equipment grounding bus at equipment room technical power panels and the main project ground field shall not exceed 0.15 OHMS.
E. For community antenna television and master antenna television systems and related provisions, comply with Article 800, National Electrical Code.

8. CABLE AND WIRE

A. All low voltage cable and wire by Audio-Visual Contractor.
B. Use plenum rated wire where required by code.
C. All wire distribution to equipment rack to be plenum rated.

9. GENERAL

A. In the event that these plans, notes or details or any part or portion thereof are used by any third-party without the express authorized permission of VENEKLASEN ASSOCIATES, the unauthorized user and anyone benefiting therefrom, shall defend, indemnify and hold harmless VENEKLASEN ASSOCIATES and its Agents, Principals, Employees and Consultants from and against any and all claims, including attorneys' fees arising out of said unauthorized use.
B. Furthermore, the unauthorized use of these plans, notes, details or any part or portion therefore is expressly prohibited and VENEKLASEN ASSOCIATES retains a copyright over any and all documents prepared by VENEKLASEN ASSOCIATES.
C. In the event that the installer deviates from the plans and specifications prepared by VENEKLASEN ASSOCIATES which results in damage to persons or property of any kind, Installer hereby agrees to defend, indemnify and hold harmless VENEKLASEN ASSOCIATES, its Agents, Principals, Employees and Consultants from and against any and all claims, including attorneys' fees caused by such failure to follow the plans and specifications prepared by VENEKLASEN ASSOCIATES, excepting only the damages to persons or property which are caused by the sole negligence or willful misconduct of VENEKLASEN ASSOCIATES.
D. Drawings are diagrammatic and are intended to convey Scope of Work and to indicate general arrangement. There are not intended to show every detail including offset or fitting or every structural difficulty that may be encountered during the work. Except as otherwise indicated, locations of items are approximate only. Exact locations necessary to secure proper conditions and results must be determined at project site and must be approved by the Owner's representative.
E. Except as otherwise indicated, make reasonable modifications in layout as needed to prevent conflict with other work or proper execution of work.
F. Include work not usually shown or specified, but necessary for proper installation and operation of a system or piece of equipment in work.

AV JUNCTION BOX SCHEDULE

Device ID	Description	Box Type	Box Size	Install Method	Elevation
AV1	AV PANEL JUNCTION BOX	3-GANG DEEP BACK BOX	8-5/8 x 4-11/16 x 2-1/8	WALL	24" AFF.
AVDB	AV DISTRIBUTION JUNCTION BOX	HOFFMAN ASG12X12X6 WITH COVER	12 x 12 x 6	ABOVE CEILING	
CAM1	CAMERA JUNCTION BOX	4 SQ. BOX W/1GMR	4 x 4 x 2-1/8	CEILING	
CT1	AV PANEL JUNCTION BOX	4 SQ. BOX W/1GMR	4 x 4 x 2-1/8	WALL	PSCH
FB1	LECTERN FLOOR BOX	LEGRAND WIREMOLD EVOLUTION EFB6S-FC	24 3/4 x 19 1/4 x 7 1/2	FLOOR	
FB2	LECTERN FLOOR BOX	LEGRAND WIREMOLD EVOLUTION EFB6S-FC	24 3/4 x 19 1/4 x 7 1/2	FLOOR	
FB3	LECTERN FLOOR BOX	LEGRAND WIREMOLD EVOLUTION EFB6S-FC	24 3/4 x 19 1/4 x 7 1/2	FLOOR	
FB4	LECTERN FLOOR BOX	LEGRAND WIREMOLD EVOLUTION EFB6S-FC	24 3/4 x 19 1/4 x 7 1/2	FLOOR	
FB5	CONFERENCE TABLE FLOOR BOX	LEGRAND WIREMOLD EVOLUTION EFB6S-FC	24 3/4 x 19 1/4 x 7 1/2	FLOOR	
PSC1	PROJECTION SCREEN CONTROL JUNCTION BOX	4.7 SQ. BOX DEEP	4-11/16 x 4-11/16 x 2-1/8	CEILING	
PT1	POKE-THROUGH FLOOR BOX	LEGRAND EVOLUTION POKE-THRU 10-AT	10" DIA, 11.125 D	FLOOR	
PT2	POKE-THROUGH FLOOR BOX	LEGRAND EVOLUTION POKE-THRU 10-AT	10" DIA, 11.125 D	FLOOR	
SC1	CEILING SPEAKER BACKCAN	ATLAS FAP82T TRIM RING OR TILE BRIDGE		CEILING	
VD50	VIDEO DISPLAY JUNCTION BOX	FSR-INC PWB-253 AS REQUIRED ACCESSORIES AND COVER	14-1/4 x 7-3/32 x 2-1/8	WALL	60" AFF.
VD70	VIDEO DISPLAY JUNCTION BOX	FSR-INC PWB-253 AS REQUIRED ACCESSORIES AND COVER	14-1/4 x 7-3/32 x 2-1/8	WALL	60" AFF. (2)
VPJ1	VIDEO PROJECTOR JUNCTION BOX	4.7 SQ. BOX DEEP W/2GMR	4-11/16 x 4-11/16 x 2-1/8	WALL	102" AFF.
VPJ2	VIDEO PROJECTOR JUNCTION BOX	4.7 SQ. BOX DEEP W/2GMR	4-11/16 x 4-11/16 x 2-1/8	CEILING	
WB1	LECTERN WALL BOX	FSR INC WB-X2-GNG	12.38 x 12.38 x 3.97	WALL	18" AFF.

NOTE: CONTRACTOR IS TO PROVIDE BLANK PANELS FOR ALL BOXES THAT ARE DESIGNATED FOR FUTURE USE. BOXES THAT ARE ABLE TO ACCEPT STANDARD SIZE BLANK PANELS SHALL BE PROVIDED WITH SAME (SGMR, 2GMR, SWITCH BOXES, ETC). NON STANDARD SIZE BOXES (I.E. TOUCH PANELS) WILL BE PROVIDED WITH ANODIZED ALUMINUM BLANK PANELS. SEE SPECIFICATION FOR REQUIREMENTS (I.E. COLOR COORDINATION). CONTRACTOR TO LABEL ALL CONDUIT STUBS AND FUTURE BACK BOXES WITH PERMANENT MARKER. SEE SPECIFICATION FOR DETAILS.

SHEET INDEX

AV SHEET INDEX

SHEET NUMBER	SHEET NAME	DD COORDINATION - 02/26/2016	DESIGN DEVELOPMENT - 02/24/2016	COORDINATION SET - 06/24/2016	COORDINATION SET - 07/12/2016	60% CONSTRUCTION DOCUMENTS - 07/26/2016	95% CONSTRUCTION DOCUMENTS - 10/28/2016	100% CONSTRUCTION DOCUMENTS - 12/16/2016	DSA APPROVAL SET - 07/06/2017	ISSUE ADDENDUM #2 - 09/01/2017
AV001	GENERAL NOTES, BOX SCHEDULE AND SHEET INDEX	X	X	X	X	X	X	X	X	X
AV002	ABBREVIATIONS, NOTES, AND SYMBOLS	X	X	X	X	X	X	X	X	X
AV101	TYPICAL ROOM EQUIPMENT PLAN LAYOUTS		X	X	X	X	X	X	X	X
AV201	FIRST LEVEL AV FLOOR PLAN	X	X	X	X	X	X	X	X	
AV202	SECOND LEVEL AV FLOOR PLAN	X	X	X	X	X	X	X	X	
AV203	THIRD LEVEL AV FLOOR PLAN	X	X	X	X	X	X	X	X	
AV301	FIRST LEVEL AV REFLECTED CEILING PLAN	X	X	X	X	X	X	X	X	
AV302	SECOND LEVEL AV REFLECTED CEILING PLAN	X	X	X	X	X	X	X	X	
AV303	THIRD LEVEL AV REFLECTED CEILING PLAN	X	X	X	X	X	X	X	X	
AV401	AV SECTIONS AND ELEVATIONS			X	X	X	X	X	X	X
AV402	AV SECTIONS AND ELEVATIONS			X	X	X	X	X	X	X
AV403	AV SECTIONS AND ELEVATIONS			X	X	X	X	X	X	
AV404	AV SECTIONS AND ELEVATIONS				X	X	X	X	X	
AV501	AV RISERS	X	X	X	X	X	X	X	X	X
AV600	WIRING SCHEME AND SYMBOL KEY					X	X	X	X	
AV601	AV ONELINE DIAGRAMS				X	X	X	X	X	X
AV602	AV ONELINE DIAGRAMS					X	X	X	X	X
AV603	AV ONELINE DIAGRAMS					X	X	X	X	X
AV604	AV ONELINE DIAGRAMS					X	X	X	X	X
AV651	AV EQUIPMENT RACK ELEVATIONS						X	X	X	X
AV701	AV DETAILS	X	X	X	X	X	X	X	X	X
AV702	AV DETAILS	X	X	X	X	X	X	X	X	
AV703	AV DETAILS		X	X	X	X	X	X	X	X
AV751	FACILITY PANEL DETAILS					X	X	X	X	X
AV752	FACILITY PANEL DETAILS						X	X	X	X

Grand total: 25

HGA
1918 Main Street, Third Floor
Santa Monica, California 90405
Telephone 310.557.7600

STRUCTURAL ENGINEER
SAIFUL BOUQUET
155 N LAKE AVE
PASADENA, CA 91101
626-304-2616

MECHANICAL & PLUMBING ENGINEER
STANTEC CONSULTING INC
14130 RIVERSIDE DR. # 201
SHERMAN OAKS, CA 91423
818-377-8220

ELECTRICAL ENGINEER
FBA ENGINEERING
150 PAULARINO AVE. #A120
COSTA MESA, CA 92626
949-852-9995

CIVIL ENGINEER
KPFF CONSULTING ENGINEERS
700 SOUTH FLOWER ST. #2100
LOS ANGELES, CA 90017
213-418-0201

LANDSCAPE ARCHITECT
LYNN CAPOUYA, INC.
17992 MITCHELL SOUTH, #110
IRVINE, CA 92614
949-756-0150

LABORATORY CONSULTANT
RESEARCH FACILITIES DESIGN
3965 FIFTH AVE. #400
SAN DIEGO, CA 92103
619-297-0159

SCIENCE CENTER
SANTA ANA COLLEGE
RANCHO SANTIAGO COMMUNITY COLLEGE DISTRICT
1530 W. 17TH ST.
SANTA ANA, CA 92706

SANTA ANA COLLEGE

I HEREBY CERTIFY THAT THIS PLAN, SPECIFICATION OR REPORT WAS PREPARED BY ME OR UNDER MY DIRECT SUPERVISION AND THAT I AM A DULY LICENSED ARCHITECT UNDER THE LAWS OF THE STATE OF

LICENSED ARCHITECT JAMES G. MATSON C-23036 SEPTEMBER 30, 2017 RENEWAL DATE STATE OF CALIFORNIA

REGISTERED PROFESSIONAL ENGINEER Hooshang Khosrovani No. 22163 Exp. 12/31/17 MECHANICAL STATE OF CALIFORNIA

NAME: HOOSHANG KHOSROVANI
DATE: JULY 06, 2017
REGISTRATION NUMBER: 22163

NO	DESCRIPTION	DATE
2	Addendum #2	09/01/2017

ISSUANCE HISTORY - THIS SHEET

DRAWN BY: MD, EC REVIEW BY: MD

HGA NO: 3584-001-00

GENERAL NOTES, BOX SCHEDULE AND SHEET INDEX

DATE: JULY 06, 2017

AV001

ADDENDA PACKAGE

Ⓒ COPYRIGHT HAMMEL, GREEN AND ABRAHAMSON, INC.

MD, EC 8/30/2017 6:59:15 PM C:\Users\amurillo\Documents\SAC_SC_AV_amurillo@veneklasen.com.rvt

DEVICE / BOX ID

Device_ID	Description										
		CPP	Central Paging Processor			MSF	Master Fader	RX	Receiver	TVT	TV/RF Tuner
1GMR	1 Gang Mud Ring	CPU	Central Processing Unit	HDTV	High Definition Television	MSP	Microphone Splitter			TX	Transmitter
1GMR	1 Gang Mud Ring	CRC	Camera Remote Control	HDW	Hardware	MSR	Microphone Splitter Rack	S	Speaker Level		
2GMR	2 Gang Mud Ring	CRK	Control Rack	HFS	High Frequency Speaker	MSV	Media Server	SA	Aquatic Speaker	UBC	Unbalance to Balance Converter
3DTV	3D Television	CS	Conference Station	HHM	Hand Held Microphone	MSW	Matrix Switcher	SAN	Storage Area Network	UC	Up Converter
3GMR	3 Gang Mud Ring	CSF	Call Signal Flasher	HPR	Headphone Remote Station	MXP	Mixer Pre-Amplifier	SAT	Satellite Receiver	UP	Usher Panel
4GMR	4 Gang Mud Ring	CT	Control	HRB	Headset Remote Box			SB	Bass Speaker	UPS	Uninterruptible Power Supply
		CTM	Control Module	HS	Headset	NADU	Network Audio Distribution Amp	SC	Ceiling Speaker	USB	Univeral Serial Bus
A	Audio	CTN	Cable Tuner	HTS	Home Theater System	NET	Network Outlet	SCB	Cinema Speaker Bass	USBX	Univeral Serial Bus Extender
ABA	Audio Buffer Amplifier	CTR	Controller			NHB	Network Hub	SCD	Speaker Control Distribution		
AC	Audio Combiner	CTS	Computer Training System	IAA	Integrated Audio Amplifier	NI	Network Interface	SCF	SC Fiber Connector	V	Video
ACM	Audio Card Module	CVM	Computer Video Monitor	IBP	Intercom Belt Pack	NMCPU	Network Manager CPU	SCN	Cinema Speaker	VC/SS	Volume Control / Selector Switch
ACN	Audio Control Network			IBS	Intercom Base Station	NSG	Noise Gate	SCP	System Control Pad	VCA	Voltage Controlled Amplifier
ACR	Audio Control Relay	DA	Distribution Amp	IC	Intercom	NSS	Network Source Switch	SDA	SDI Distribution Amplifier	VCC	Video Conference Camera
ACS	Audio Conferencing System	DAB	Digital Audio Bus	ICS	Intercom Station	NT	Network Terminator	SDB	Speaker Distribution Box	VCM	Video Card Module
ADA	Audio Distribution Amplifier	DAO	Digital to Analog Output	ID	Interactive Display	NWS	Network Switch	SDD	Solid State Disk Dock	VCR	Video Cassette Recorder
ADB	Audio Distribution Box	DAR	Digital Audio Recorder	IFC	Interface Card			SE	Effects Speaker	VCS	Video Conferencing System
ADI	Analog to Digital Input	DAS	Digital Audio Source	IH	Intercom Handset	OPJ	Optical Projector	SER	Serial	VCU	Video Conferencing Unit
ADK	Audio Ducker	DAT	Digital Audio Tape Unit	IHS	Intercom Head Set			SES	Sound Enhancement Speaker	VD	Video Display
ADP	Adaptor	DB	Direct Box	IMS	Intercom Main Station	P	Power	SFF	Front Fill Speaker	VDA	Video Distribution Amplifier
AE	Audio Extractor	DC	Document Camera	IOP	Input/Output Panel	PA	Power Amplifier	SG	Grade Speaker	VDR	Video Disk Recorder
AFT	AM/FM Tuner	DCA	Digital Controlled Amplifier	IPC	IP Camera	PAD	Pad	SGEN	Sync Generator	VE	Video Encoder
AIM	Audio Input Module	DCC	Data Control Card	IR	Infrared	PB	Push Button	SGP	Signal Processor	VEH	Video Encoder Hub
AIP	Audio Input Panel	DCM	Digital Cart Machine	IRB	IR Broadcast	PBR	Play Back Rack	SGS	Signage Server	VF	View Finder
AIU	Analog Interface Unit	DCN	Divider Combiner Network	IRE	IR Emitter	PC	Personal Computer	SH	Horn Speaker	VFX	Video Effects Processor
AL	Audio Left	DCPU	Digital Central Processing Unit	IRM	IR Modulator	PCB	Patch Cable	SHF	Shelf	VIC	Visual Concert
ALA	Assistive Listening Antenna	DD	Dimmer Doubler	IRR	IR Receiver	PCC	Personal Computer Control	SI	Sensor Interface	VIP	Video Input Panel
ALR	Assistive Listening Receiver	DDL	Digital Delay	IRS	Intercom Remote Station	PCD	Power Conditioner	SIS	Set Integrated Speaker	VL	Voice Lift
ALS	Assistive Listening System	DEC	Decoder	IRT	IR Transmitter	PCLD	Projector Controller With Line Doubler	SIW	In-Wall Speaker	VLCF	Voice Lift Card Cage Frame
ALT	Assistive Listening Transmitter	DEQ	Dynamic Equalizer	ISDN	Integrated Service Digital Network	PCT	Portable Cart	SJB	Speaker Junction Box	VM	Video Monitor
AM	Audio Monitor	DFR	Digital File Recorder	ITR	Isolation Transformer	PD	Plasma Display	SLA	Speaker Line Array	VMS	Video Matrix Switcher
AMS	Audio Monitor Speaker	DIM	Dimmer Module			PDL	Plasma Display Lift	SMP	Stage Manager Panel	VOL	Volume Control
AMX	Auto Mixer	DIU	Digital Interface Unit	JB	Junction Box	PEC	Portable Equipment Case	SMR	Stage Manager Rack	VOP	Voice Over Paging Module
ANT	Antenna	DJCC	Digital Joystick Camera Control			PEQ	Parametric Equalizer	SMS	Scaling Matrix Switcher	VPB	Video Patch Bay
AOB	Analog Output Bridge	DM	Digital Mixer	KB	Keyboard	PGM	Program Monitor	SMSW	Satellite Multiswitch	VPJ	Video Projector
AOP	Audio Output Panel	DMR	Dimmer Rack	KM	Keyboard & Mouse	PGS	Paging System	SMX	Splitter Mixer	VPJRM	Video Projector Rotating Mount
APB	Audio Patch Bay	DMX	DMX	KMI	Keyboard & Mouse Interface	PI	Power Injector	SO	Speaker Overhead	VPM	Video Program Monitor
APD	Antenna Power Distribution	DMXC	DMX Control Cable	KMK	Keyboard & Mouse Kit	PJL	Projector Lift	SP	Speaker	VPS	Video Production Switcher
APM	Audio Program Monitor	DMXN	DMX Node	KVM	Keyboard, Video & Mouse	PJS	Projection Screen	SPCL	Speaker Cluster	VSC	Video Scan Converter
AR	Audio Right	DPB	Disc Publisher	KVME	Keyboard, Video & Mouse Extender	PM	Paging Microphone	SPG	Program Speaker	VSL	Video Scaler
ASP	Antenna Splitter	DRC	Door Control			PMIC	Presentation Microphone	SPJ	Slide Projector	VSP	Video Signal Processor
ASV	Audio Server	DREC	Digtial Recorder	LAN	Local Area Network	PMP	Podium Microphone Panel	SPN	Stage Panel	VSPC	Video Screen Panel Control
ASW	Audio Switcher	DSD	Data Stroage Device	LC	Lighting Console	PNWS	Power Network Switch	SPP	Speaker Patch Panel	VSS	Video System Switcher
AT	Audio Tie Line	DSP	Digital Signal Processor	LD	Line Doubler	POD	Podium	SPR	Speaker Processor	VSV	Video Server
ATI	Audio Teleconference Interface	DSS	Digital Satellite System	LDP	Laser Disc Player	PP	Podium Panel	SPT	Speaker Portable	VSW	Video Switcher
ATN	Attenuator	DTP	Digital Twisted Pair	LDR	Line Driver	PPS	Phantom Power Supply	SRA	Stereo Receiver Amp	VT	Video Tie Line
AV	Audio Video	DVC	DVD/VCR Combo	LEC	Lectern	PRE	Pre Amplifier	SS	Surround Sound Speaker	VW	Video Wall
AVC	Auto Volume Controller	DVD	Digital Versatile Device	LED	Light Emitting Panel	PRK	Portable Rack	SSA	Solid State Audio Source	VWP	Video Wall Processor
AVD	Audio Video Distribution	DVHS	Digital Cassette Recorder	LFS	Low Frequency Speaker	PS	Power Supply	SSF	Sliding Shelf		
AVI	Audio Video Interface	DVP	Digital Video Processor	LI	Lighting Interface	PSB	Powered Subwoofer	SSV	Streaming Server	WAA	Wireless Antenna Amplifier
AVIM	Audio Video Input Module	DVR	Digital Video Recorder	LL	Line Level	PSC	Projection Screen Control	SSW	Serve Switch	WAD	Wireless Antenna Distribution
AVN	Audio Video Network	DVS	Digital Video Scaler	LM	Line Module	PSD	Paging Station Desk Mount	SUM	Summing Amplifier	WAS	Wireless Antenna Splitter
AVP	Audio Video Panel	DWR	Drawer	LP	Lectern Panel	PSLR	Program Select & Level Remote	SV	S-Video	WB	White Board
AVR	Audio Video Router			LPM	Lapel Microphone	PSP	Powered Speaker	SVC	Slide to Video Converter	WBC	Window Blind Control
AXF	Auto Transformer	EBD	Embedder	LPT	Laptop	PSR	Paging Station Rack Mount	SVDA	S-Video Distribution Amp	WBP	Wireless Belt Pack
		EBF	Expanded Beam Fiber Connector	LTF	Line Transformer	PSW	Paging Station Wall Mount	SVHS	S-Video Cassette Recorder	WC	Word Clock
BC	Battery Charge	EC	Expansion Card	LTP	LCD Touch Panel	PT	Poke-Through	SVMS	S-Video Matrix Switcher	WER	Wireless Ethernet Router
BDP	Blu-Ray Disc Player	EDB	Electrical Distribution Box	LVR	Line Voltage Regulator	PTC	Pan & Tilt Camera	SVS	S-Video Switcher	WFM	Waveform Monitor
BOB	Break Out Box	EFX	Effects Processor			PVM	Preview Video Monitor	SVSS	S-Video Separator Switcher	WGA	Wireless Gateway Antenna
BP	Belt Pack	ELTC	Emergency Lighting Transfer Cabinet	MA	Mixer Amplifier	PWS	Power Strip	SW	Wall Mounted Speaker	WGW	Wireless Gateway
		EN	Ethernet	MAL	Media Archive Library	PXS	Proximity Switch	SWG	Switch Glass	WIA	Wireless Intercom Antenna
C	Conduit	ENC	Encoder	MATV	Master Antenna Television	PZM	Pressure Zone Microphone	SWH	Sound Web Hub	WLM	Wireless Microphone
CAM	Video Camera	ENG	Electronic News Gathering	MCT	Main Cabler Tray			SYSW	System Switcher	WLU	Wireless Unit
CAS	Cassette Deck	EQ	Equalizer	MCV	Media Converter	RAS	RGB Auto Switcher			WM	Wireless Mouse
CASR	Cassette Deck Recorder	ERK	Equipment Rack	MD	Mini Disc	RC	Remote Control	TAM	Telephone Access Module	WMA	Wireless Mic Antenna
CATV	Community Antenna Television	ERT	Ethernet Router	MDCF	Matrix Digital Card Frame	RDA	RGB Distribution Amp	TB	Terminal Box	WMAP	Wireless Mic Antenna Panel
CBT	Cable Tray	EXG	Expander/Gate	MDR	Motion Detector	REC	Record	TBC	Time Base Corrector	WMG	Wire Manager
CC	Contact Closure	EXT	Extender	MFP	Microphone Facility Panel	REV	Reverb	TBU	Tape Backup	WMKA	Wireless Mic Keyboard Antenna
CCC	Contact Closure Card			MFS	Mid Frequency Speaker	RF	Radio Frequency	TC	Programmable Time Clock	WMKS	Wireless Mouse Keyboard Antenna
CCD	CD/Cassette Deck	F	Fiber	MI	Midi Interface	RFA	RF Amplifier	TCB	Terminal Cabinet	WMR	Wireless Mic Receiver
CCF	Card Cage Frame	FB	Floor Box	MIC	Microphone	RFAS	RF Antenna Splitter	TCR	Transcoder	WP	Wall Plate
CCU	Camera Control Unit	FBS	Feed Back Suppresser	MIDI	MIDI	RFDA	RF Distribution Amplifier	TCS	Teleconferencing System	WPG	Wireless Presentation Gateway
CDB	Crestron Distribution Block	FLM	Floor Monitor	MIX	Mixer	RFS	RF Splitter	TEL	Telephone Output	WPN	Wall Panel
CDC	Compact Disc Changer	FMA	FM Antenna	MKB	Monitor Keyboard Sliding Shelf	RFT	RF Transmitter	TI	Telephone Interface	WSI	Work Station Interface
CDP	Compact Disc Player	FMR	FM Receiver	MM	Microphone Module	RFTA	RF Transmitting Antenna	TJB	Transformer Junction Box	WTA	Wireless Touch Panel Adapter
CG	Character Generator	FMT	FM Tuner	MMC	Media Matrix Computer	RGB	RGBHV	TM	Table Microphone	WTP	Wireless Touch Panel
CIM	Control Interface Module	FMTA	FM Transmitting Antenna	MMP	Monitor Mix Panel	RIP	Rack Input Panel	TMB	Table Microphone Box	WTPR	Wireless Touch Panel Receiver
CIU	Computer Interface Unit	FMTR	FM Transmitter	MMPA	Measurement Mix Pre Amplifier	RK	Rack Lights	TP	Twisted Pair		
CL	Camera Lens	FOH	Front Of House	MNP	Masking Noise Processor	RKM	Rack Mount	TPC	Touch Panel Control	XFR	Transformer
CM	Card Module	FP	Facility Panel	MOD	Modulator	RM	Relay Module	TPM	Teleprompter	XKVM	Extended KVM
CME	Control Module Extended	FPL	Floor Panel	MON	Monitor	RMS	RGB Matrix Switcher	TPR	Twisted Pair Receiver	XLRP	XLR Panel
CMIC	Ceiling Microphone	FREC	Fiber Receiver	MOU	Mouse	RPM	Retractable Projector Mount	TPT	Twisted Pair Transmitter	XOV	Crossover
CN	CobraNet	FSC	File System Controller	MP	Media Panel	RPN	Rack Panel	TR	Talent Receiver		
CNT	Control Network	FT	Fiber Tie Line	MPA	Microphone Pre-Amplifier	RPT	Repeater	TRC	Transceiver		
COD	Codec Unit	FTP	Fiber Tie Panel	MPN	Monitor Panel	RSC	RGB System Controller	TS	Touch Screen		
CON	Converter	FW	Firewire	MPS	Motorized Projection Screen	RSI	RGB Switching Interface	TT	Turn Table		
CP	Conduit Pocket			MR	Message Repeater	RSRS	Rotating Sliding Rail System	TTP	Table Top Panel		
CPIS	Control Plug In Station	GEQ	Graphic Equalizer	MRP	MD Recorder Player	RSW	RGB Switcher	TV	Television		
CPL	Compressor/Limiter	GNM	Gooseneck Microphone	MSC	Main System Controller	RTP	Remote Truck Panel	TVP	TV Panel		

2

ABBREVIATIONS

(E)###	Existing	CLG	Ceiling			NTS	Not To Scale		
(F)	Future	CM	Construction Manager	GC	General Contractor			SECT	Section
		CO	Conduit Only			OC	On Center	SHP	Shielded Pair
A 0	Above Zero Floor Level			HR	Home Run	OD	Outer Diameter	SIM	Similar
ACT	Above Counter Top	DIA	Diameter			OFCI	Owner Furnished Contractor Installed	SM	Stage Manager
AFB	Above Floor Below	DR	Door	IW	In Wall	OFE	Owner Furnished Equipment	STD	Standard
AFC	Above Finished Ceiling					OFOI	Owner Furnished Owner Installed		
AFF	Above Finished Floor	E.C.	Empty Conduit	LP	Lightning Protector			TPD	Tripod
AH	Above Header	EC	Electrical Contractor	LRR	Lightning Room Rack	P/O	Part Of	TST	Test Set
AS	Above Slab	EL	Elevation	LTG	Lighting	PF	Press Feed	TYP	Typical
		ELEC	Electrical			POC	Point of Connection		
BFC	Below Finished Ceiling	EOL	End Of Line	MISC	Miscellaneous	PRG	Program	UBC	Uniform Building Code
BGM	Background Music	EQUIP	Equipment	MOM	Momentary	PROJ	Project	UON	Unless Otherwise Noted
BOH	Back Of House			MTD	Mounted	PSCH	Project Standard Control Height		
BTU	British Thermal Units	FAN	Fan Panel	MTF	Mounting Termination Fabrication	PSRH	Project Standard Receptacle Height	VIF	Verify In Field
		FBO	Furnished By Owner	MTL	Metal	PSSH	Project Standard Switch Height		
CAB	Cabinet	FCA	Finished Ceiling Above			PST	Pull String	WP	Weather Proof
CATV	Cable TV	FIN	Finished	NC	Normally Closed	PWR	Power		
CBC	California Building Code	FOH	Front Of House	NIC	Not In Contract				
CL	Center Line	FSF	Folding Shelf	NO	Normally Open	RCP	Reflected Ceiling Plan		

FACILITY INPUT SYMBOL SCHEDULE AND DESCRIPTIONS FOR FLOOR AND CEILING PLANS

F FLOOR MOUNTED
W WALL MOUNTED
C CEILING MOUNTED
I INTERGRATED (MILLWORK, PODIUM, TABLE)

BOX MOUNTED BELOW
BOX MOUNTED ABOVE

EXISTING EQUIPMENT

SWING OUT RACK
WALL MOUNTED RACK
IN-WALL RACK
FLOOR STANDING RACK

MOUNTING
(E) = EXISTING TO REMAIN
(F) = FUTURE
(R) = REPLACE EXISTING
SYMBOL ID
\# (#)###

CONDUIT STUB
STUB UP/DOWN

DETAIL NUMBER
AV SHEET NUMBER

RISER SYMBOL SCHEDULE AND DESCRIPTIONS

DEVICE ID OR OBJECT IDENTIFICATION
\### AV DEVICE

CONTINUE CABLE/ CONDUIT ROUTING TO LAST DEVICE
TOTAL QUANTITY OF DEVICES ON RUN

CONDUIT SIZE IN INCHES
\#** (#)## LINE OR SECTION
WIRE TYPE
* WIRE QTY.

* QUANTITY (1) UNLESS OTHERWISE NOTED
** ONE CONDUIT PER LINE OR SECTION UNLESS OTHERWISE NOTED

FACILITY PANEL CONNECTOR LEGEND

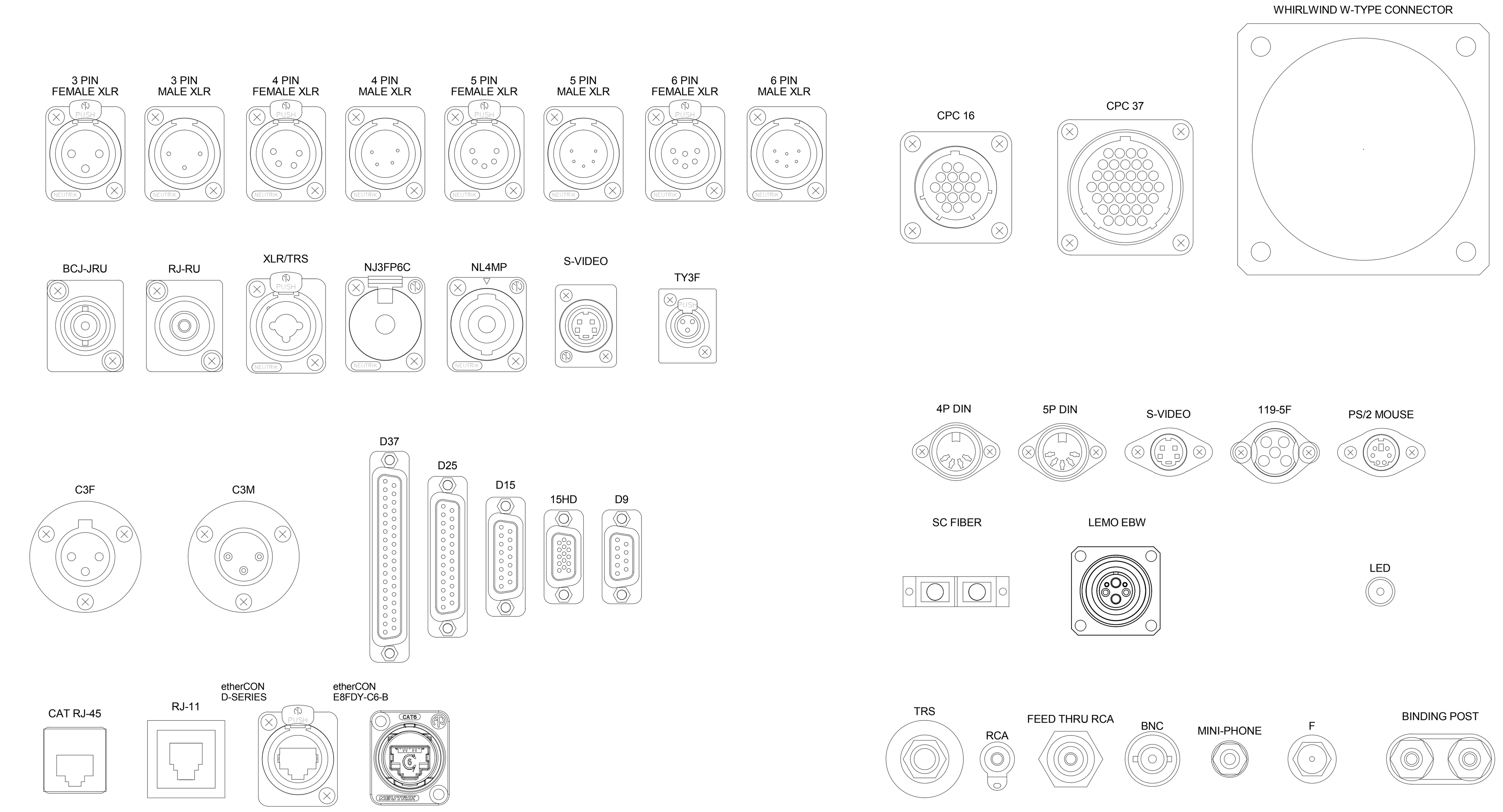

WIRE SCHEDULE

TYPE	APPLICATION	DESCRIPTION (FIXED INSTALL CABLE)	O.D.	MANUF.	PART NO.
A1	AUDIO ANALOG/DIGITAL CABLE	ANALOG/DIGITAL AUDIO CABLE, MICROPHONE AND LINE LEVEL WIRING, LESS THAN +24 dBu, FROM 20Hz TO 20kHz, 24 AWG, IMPEDANCE 110\U+2126 ±20%, CAPACITANCE 26pF/FT, 100% SHIELDED, STRANDED TWISTED PAIR	0.177	BELDEN	1800B
C2	NETWORK	CONTROL CABLE AC/DC, 22 AWG, 2 PAIR, TWISTED, TINNED COPPER	0.233	BELDEN	9744
D1	DATA SERIAL CABLE RS232-485	SERIAL DATA CABLE, 28 AWG, TINNED COPPER, 100% FOIL, 65% TC BRAID SHIELD, TWISTED 2 PAIR	0.220	BELDEN	8132
D3	CAT 6 DATA NETWORK CABLE	CATEGORY 6 DATA CABLE, 23 AWG, UNBONDED PAIR CABLES, SOLID BARE COPPER, MAX. ATTENUATION 28.3dB/100m @ 200MHz, MAX DELAY SKEW 45ns/100 m , NOM MUTUAL CAPACITANCE @ 1KHz 15pF/FT, MAX DC RESISTANCE 8.2\U+2126/100m	0.220	BELDEN	2412
M8	NETWORK	FOUR TWISTED PAIR, DRAIN, SHIELD, BRAID, RIPCORD AND OVERALL PVC JACKET, CAPACITANCE 17 pF/ft, DELAY SKEW 45nS/100m	0.295	BELDEN	10GX
S1	SPEAKER	LOUDSPEAKER LEVEL OR CIRCUIT WIRING GREATER THAN +24dBu, FROM 20Hz TO 20kHz, 16 AWG, STRANDED, TWISTED PAIR WITH PVC JACKET.	0.208	BELDEN	5200UP

1918 Main Street, Third Floor
Santa Monica , California 90405
Telephone 310.557.7600

STRUCTURAL ENGINEER
SAIFUL BOUQUET
155 N LAKE AVE
PASADENA, CA 91101
626-304-2616

MECHANICAL & PLUMBING ENGINEER
STANTEC CONSULTING INC
14130 RIVERSIDE DR. # 201
SHERMAN OAKS, CA 91423
818-377-8220

ELECTRICAL ENGINEER
FBA ENGINEERING
150 PAULARINO AVE. #A120
COSTA MESA, CA 92626
949-852-9995

CIVIL ENGINEER
KPFF CONSULTING ENGINEERS
700 SOUTH FLOWER ST. #2100
LOS ANGELES, CA 90017
213-418-0201

LANDSCAPE ARCHITECT
LYNN CAPOUYA, INC.
17992 MITCHELL SOUTH, #110
IRVINE, CA 92614
949-756-0150

LABORATORY CONSULTANT
RESEARCH FACILITIES DESIGN
3965 FIFTH AVE. #400
SAN DIEGO, CA 92103
619-297-0159

SCIENCE CENTER
SANTA ANA COLLEGE
RANCHO SANTIAGO COMMUNITY COLLEGE DISTRICT
1530 W. 17TH ST.
SANTA ANA, CA 92706

I HEREBY CERTIFY THAT THIS PLAN, SPECIFICATION OR REPORT WAS PREPARED BY ME OR UNDER MY DIRECT SUPERVISION AND THAT I AM A DULY LICENSED ARCHITECT UNDER THE LAWS OF THE STATE OF

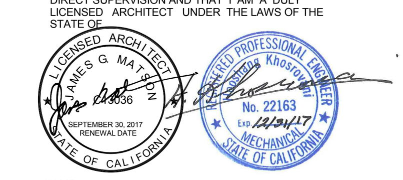

NAME: HOOSHANG KHOSROVANI
DATE: JULY 06, 2017
REGISTRATION NUMBER: 22163

NO	DESCRIPTION	DATE
2	Addendum #2	09/01/2017

ISSUANCE HISTORY - THIS SHEET
DRAWN BY: MD, EC REVIEW BY: MD

HGA NO: 3584-001-00

ABBREVIATIONS, NOTES, AND SYMBOLS

DATE: JULY 06, 2017

AV002

ADDENDA PACKAGE

© COPYRIGHT HAMMEL, GREEN AND ABRAHAMSON, INC.

MD, EC 8/30/2017 6:38:21 PM C:\Users\amurillo\Documents\SAC_SC_AV_amurillo@veneklasen.com.rvt

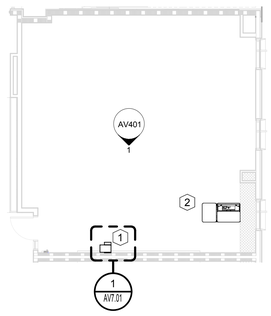

ROOMS:
SC115
SC118
SC208
SC308
SC320

TYPICAL SMALL CLASSROOM
AV FLOOR PLAN LAYOUT

SCALE: 1/8" = 1'-0"

1

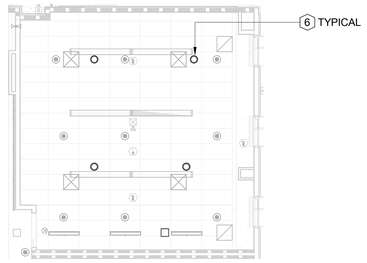

TYPICAL SMALL CLASSROOM
AV REFLECTED CEILING PLAN LAYOUT

SCALE: 1/8" = 1'-0"

2

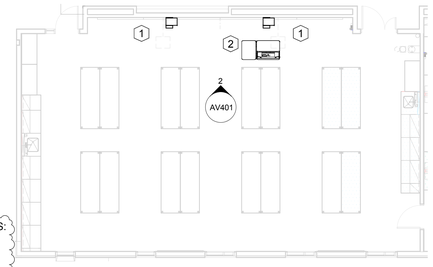

ROOMS:
SC111
SC122
SC212
SC213
SC216
SC217
SC218
SC226
SC309
SC312
SC315
SC316
SC326

TYPICAL LARGE CLASSROOM AND LAB
AV FLOOR PLAN LAYOUT

SCALE: 1/8" = 1'-0"

3

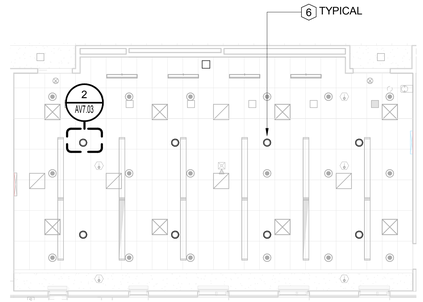

TYPICAL LARGE CLASSROOM AND LAB
AV REFLECTED CEILING PLAN LAYOUT

SCALE: 1/8" = 1'-0"

4

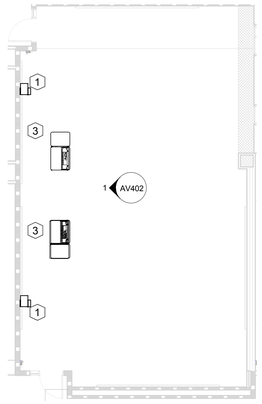

LARGE CLASSROOM (DIVISIBLE) SC113-#
AV FLOOR PLAN LAYOUT

SCALE: 1/8" = 1'-0"

5

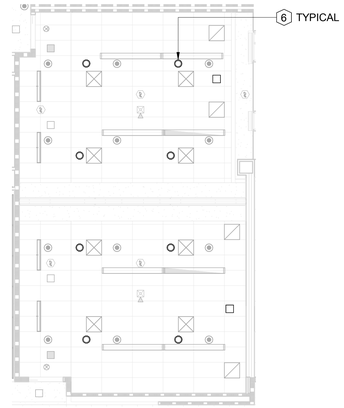

LARGE CLASSROOM (DIVISIBLE) SC113-#
AV REFLECTED CEILING PLAN LAYOUT

SCALE: 1/8" = 1'-0"

6

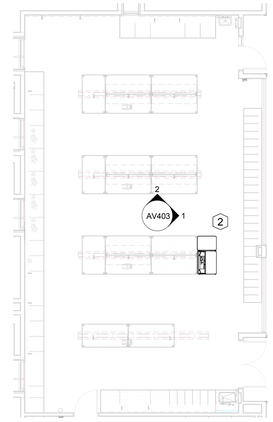

ENGINEERING LAB EQUIPMENT SC134
AV FLOOR PLAN LAYOUT

SCALE: 1/8" = 1'-0"

7

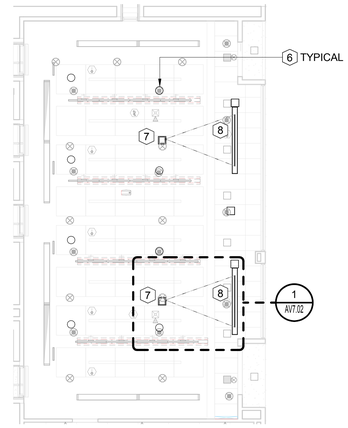

ENGINEERING LAB EQUIPMENT SC134
AV REFLECTED CEILING PLAN LAYOUT

SCALE: 1/8" = 1'-0"

8

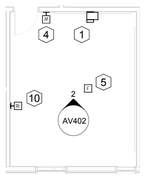

CONFERENCE ROOM SC110-3
AV FLOOR PLAN LAYOUT

SCALE: 1/8" = 1'-0"

9

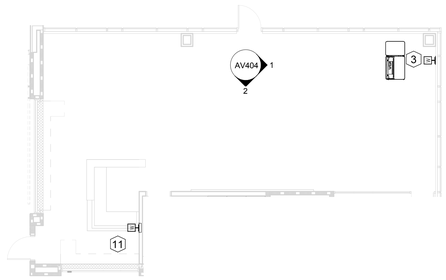

SCIENCE LEARNING CENTER SC103
AV FLOOR PLAN LAYOUT

SCALE: 1/8" = 1'-0"

10

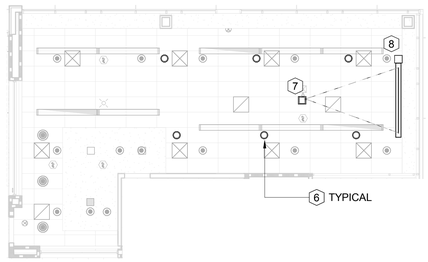

SCIENCE LEARNING CENTER SC103
AV REFLECTED CEILING PLAN LAYOUT

SCALE: 1/8" = 1'-0"

11

AV EQUIPMENT LEGEND

1. WALL MOUNTED ULTRA-SHORT THROW PROJECTOR AND WHITE BOARD
2. LECTERN WITH:
   *PRESENTATION SWITCHER
   *LAPTOP CONNECTIVITY
   *PORTABLE AV CONNECTIVITY
   *DOCUMENT CAMERA
   *PC & MONITOR
   *WIRELESS LAPEL MIC
   *GOOSENECK MIC (ONLY IN LARGE LECTURE ROOM)
   *PORTABLE ASSISTIVE LISTENING (ALS) CONNECTIVITY
3. LECTERN WITH:
   *PRESENTATION SWITCHER
   *LAPTOP CONNECTIVITY
   *PORTABLE AV CONNECTIVITY
   *DOCUMENT CAMERA
   *PC & MONITOR
   *WIRELESS LAPEL MIC
   *GOOSENECK MIC
   *PORTABLE ASSISTIVE LISTENING (ALS) CONNECTIVITY
4. WALL MOUNTED CONTROLLER
5. FLOOR BOX FOR AV CONNECTIVITY AT TABLE
   *LAPTOP CONNECTIVITY ON TABLE
6. CEILING RECESSED LOUDSPEAKER
7. VIDEO PROJECTOR - CEILING MOUNTED
8. PROJECTOR SCREEN - CEILING MOUNTED
9. CEILING PENDANT LOUDSPEAKER
10. COMPUTER IN CREDENZA
11. DIGITAL SIGNAGE DISPLAY

HGA
1918 Main Street, Third Floor
Santa Monica , California 90405
Telephone 310.557.7600

STRUCTURAL ENGINEER
SAIFUL BOUQUET
155 N LAKE AVE
PASADENA, CA 91101
626-304-2616

MECHANICAL & PLUMBING ENGINEER
STANTEC CONSULTING INC
14130 RIVERSIDE DR. # 201
SHERMAN OAKS, CA 91423
818-377-8220

ELECTRICAL ENGINEER
FBA ENGINEERING
150 PAULARINO AVE. #A120
COSTA MESA, CA 92626
949-852-9995

CIVIL ENGINEER
KPFF CONSULTING ENGINEERS
700 SOUTH FLOWER ST. #2100
LOS ANGELES, CA 90017
213-418-0201

LANDSCAPE ARCHITECT
LYNN CAPOUYA, INC.
17992 MITCHELL SOUTH, #110
IRVINE, CA 92614
949-756-0150

LABORATORY CONSULTANT
RESEARCH FACILITIES DESIGN
3965 FIFTH AVE. #400
SAN DIEGO, CA 92103
619-297-0159

SCIENCE CENTER
SANTA ANA COLLEGE

RANCHO SANTIAGO COMMUNITY COLLEGE DISTRICT

1530 W. 17TH ST.
SANTA ANA, CA 92706

SANTA ANA COLLEGE

I HEREBY CERTIFY THAT THIS PLAN, SPECIFICATION OR REPORT WAS PREPARED BY ME OR UNDER MY DIRECT SUPERVISION AND THAT I AM A DULY LICENSED ARCHITECT UNDER THE LAWS OF THE STATE OF

LICENSED ARCHITECT — CHRISTOPHER D. MAY — No. 22163 — REGISTERED PROFESSIONAL ENGINEER — MECHANICAL — STATE OF CALIFORNIA

NAME: HOOSHANG KHOSROVANI
DATE: JULY 06, 2017
REGISTRATION NUMBER: 22163

NO	DESCRIPTION	DATE
2	Addendum #2	09/01/2017

ISSUANCE HISTORY - THIS SHEET

DRAWN BY: MD, EC | REVIEW BY: MD

HGA NO: 3584-001-00

TYPICAL ROOM EQUIPMENT PLAN LAYOUTS

DATE: JULY 06, 2017

AV101

ADDENDA PACKAGE

© COPYRIGHT HAMMEL, GREEN AND ABRAHAMSON, INC.

C:\Users\amurillo\Documents\SAC_SS_AV_amurillo@ranelldesign.com.rvt 8/30/2017 6:38:25 PM MD, EC

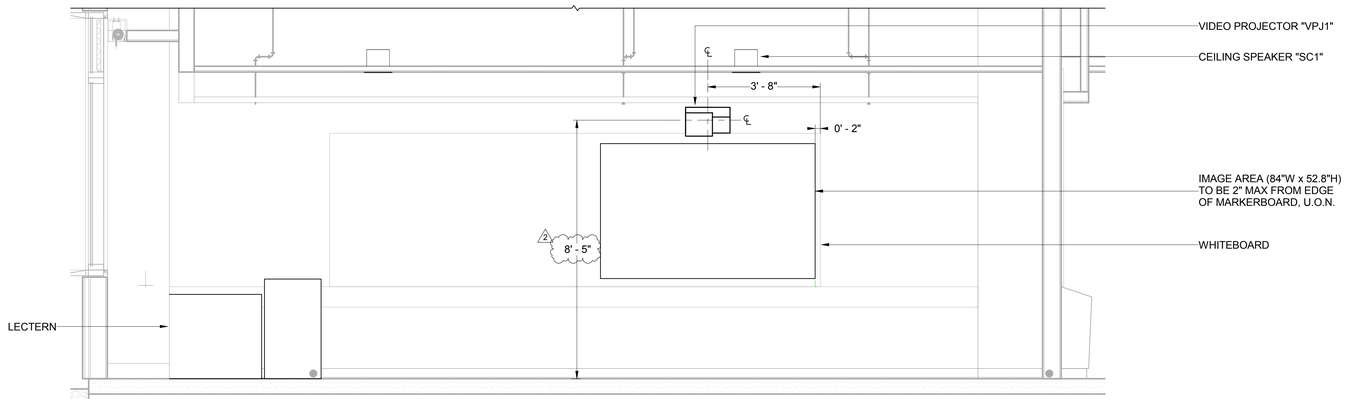

1 TYPICAL SMALL CLASSROOM ELEVATION
1/2" = 1'-0"

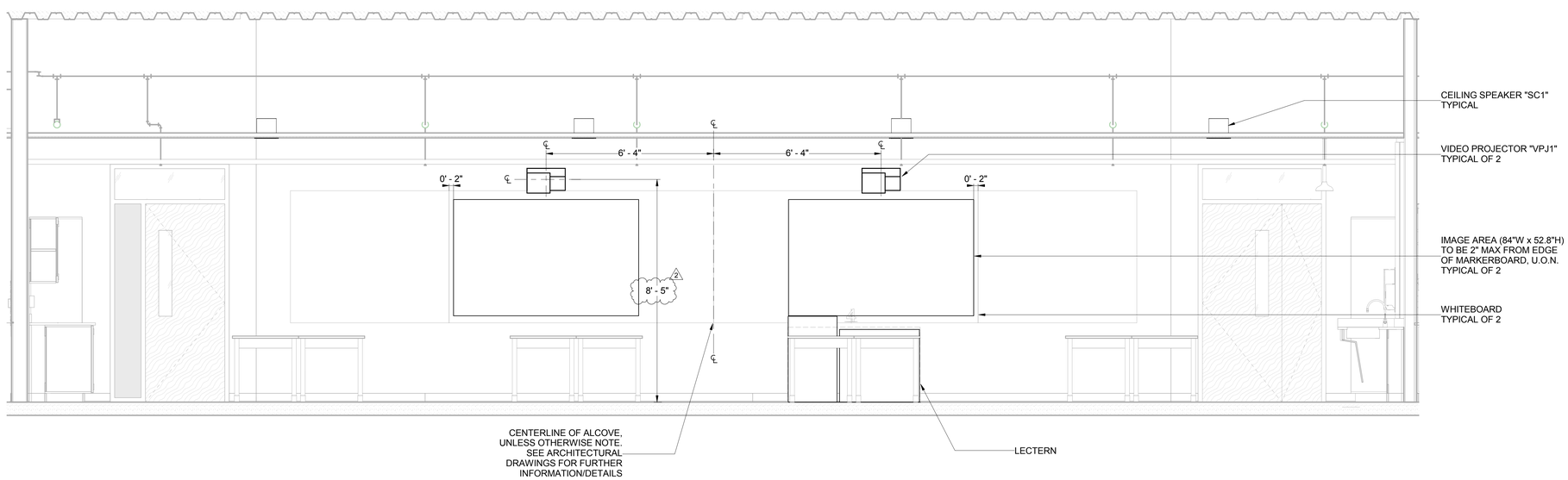

2 TYPICAL LARGE CLASSROOM ELEVATION
1/2" = 1'-0"

HGA
1918 Main Street, Third Floor
Santa Monica, California 90405
Telephone 310.557.7600

STRUCTURAL ENGINEER
SAIFUL BOUQUET
155 N LAKE AVE
PASADENA, CA 91101
626-304-2616

MECHANICAL & PLUMBING ENGINEER
STANTEC CONSULTING INC
14130 RIVERSIDE DR. # 201
SHERMAN OAKS, CA 91423
818-377-8220

ELECTRICAL ENGINEER
FBA ENGINEERING
150 PAULARINO AVE. #A120
COSTA MESA, CA 92626
949-852-9995

CIVIL ENGINEER
KPFF CONSULTING ENGINEERS
700 SOUTH FLOWER ST. #2100
LOS ANGELES, CA 90017
213-418-0201

LANDSCAPE ARCHITECT
LYNN CAPOUYA, INC.
17992 MITCHELL SOUTH, #110
IRVINE, CA 92614
949-756-0150

LABORATORY CONSULTANT
RESEARCH FACILITIES DESIGN
3965 FIFTH AVE. #400
SAN DIEGO, CA 92103
619-297-0159

SCIENCE CENTER
SANTA ANA COLLEGE

RANCHO SANTIAGO
COMMUNITY COLLEGE
DISTRICT

1530 W. 17TH ST.
SANTA ANA, CA 92706

SANTA ANA
COLLEGE

I HEREBY CERTIFY THAT THIS PLAN, SPECIFICATION OR REPORT WAS PREPARED BY ME OR UNDER MY DIRECT SUPERVISION AND THAT I AM A DULY LICENSED CERTIFIED INTERIOR DESIGNER UNDER THE STATE OF CALIFORNIA.

NAME: HOOSHANG KHOSROVANI
DATE: JULY 06, 2017
REGISTRATION NUMBER: 22163

NO	DESCRIPTION	DATE
2	Addendum #2	09/01/2017

ISSUANCE HISTORY - THIS SHEET

DRAWN BY: MD, EC | REVIEW BY: MD

HGA NO: 3584-001-00

AV SECTIONS AND ELEVATIONS

DATE: JULY 06, 2017

AV401

ADDENDA PACKAGE

© COPYRIGHT HAMMEL, GREEN AND ABRAHAMSON, INC.

MD, EC 8/30/2017 6:38:26 PM C:\Users\amurillo\Documents\SAC_SC_AV_amurillo@veneklasen.com.rvt

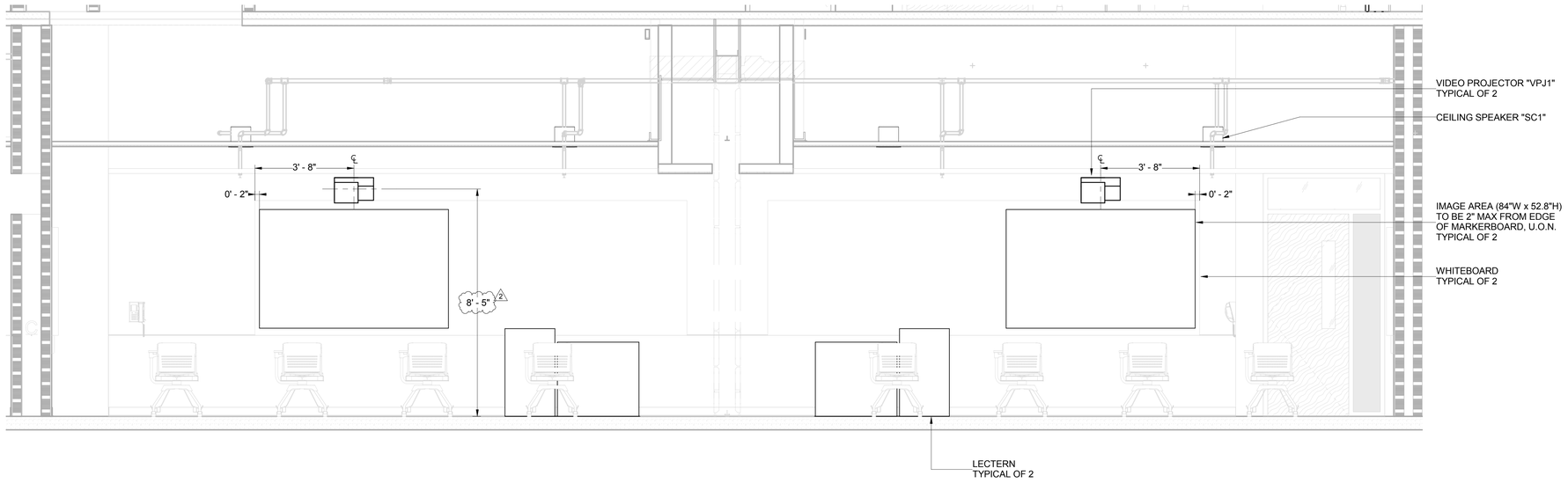

1 TYPICAL LARGE (DIVISIBLE) CLASSROOM ELEVATION
1/2" = 1'-0"

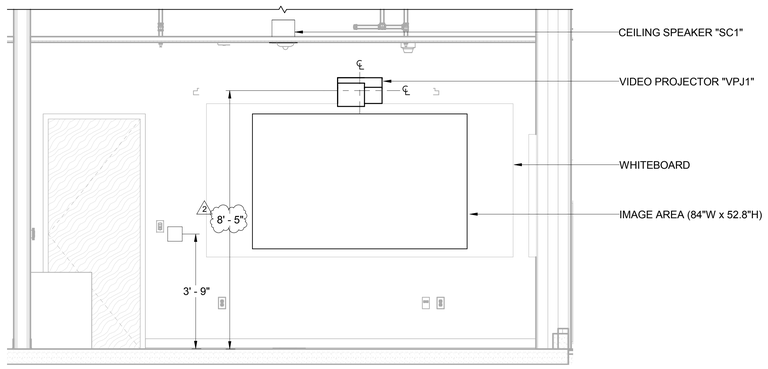

2 TYPICAL CONFERENCE ROOM ELEVATION
1/2" = 1'-0"

HGA
1918 Main Street, Third Floor
Santa Monica, California 90405
Telephone 310.557.7600

STRUCTURAL ENGINEER
SAIFUL BOUQUET
155 N LAKE AVE
PASADENA, CA 91101
626-304-2616

MECHANICAL & PLUMBING ENGINEER
STANTEC CONSULTING INC
14130 RIVERSIDE DR. # 201
SHERMAN OAKS, CA 91423
818-377-8220

ELECTRICAL ENGINEER
FBA ENGINEERING
150 PAULARINO AVE. #A120
COSTA MESA, CA 92626
949-852-9995

CIVIL ENGINEER
KPFF CONSULTING ENGINEERS
700 SOUTH FLOWER ST. #2100
LOS ANGELES, CA 90017
213-418-0201

LANDSCAPE ARCHITECT
LYNN CAPOUYA, INC.
17992 MITCHELL SOUTH, #110
IRVINE, CA 92614
949-756-0150

LABORATORY CONSULTANT
RESEARCH FACILITIES DESIGN
3965 FIFTH AVE. #400
SAN DIEGO, CA 92103
619-297-0159

SCIENCE CENTER
SANTA ANA COLLEGE
RANCHO SANTIAGO COMMUNITY COLLEGE DISTRICT
1530 W. 17TH ST.
SANTA ANA, CA 92706

SANTA ANA COLLEGE

I HEREBY CERTIFY THAT THIS PLAN, SPECIFICATION OR REPORT WAS PREPARED BY ME OR UNDER MY DIRECT SUPERVISION AND THAT I AM A DULY LICENSED ARCHITECT UNDER THE LAWS OF THE STATE OF

NAME: HOOSHANG KHOSROVANI
DATE: JULY 06, 2017
REGISTRATION NUMBER: 22163

NO	DESCRIPTION	DATE
2	Addendum #2	09/01/2017

ISSUANCE HISTORY - THIS SHEET

DRAWN BY: MD, EC | REVIEW BY: MD

HGA NO: 3584-001-00

AV SECTIONS AND ELEVATIONS

DATE: JULY 06, 2017

AV402

ADDENDA PACKAGE

© COPYRIGHT HAMMEL, GREEN AND ABRAHAMSON, INC.

MD, EC 8/30/2017 6:38:28 PM C:\Users\amurillo\Documents\SAC_SC_AV_amurillo@veneklasen.com.rvt

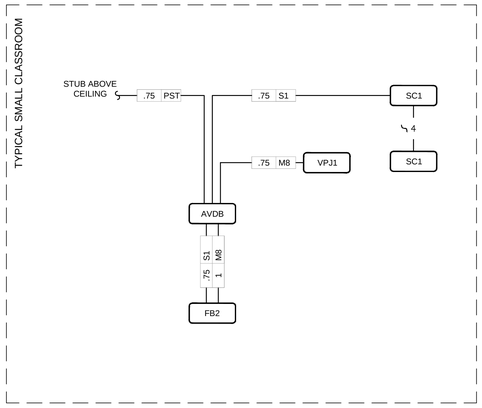

TYPICAL FOR ROOMS:
SC115, SC118

TYPICAL SMALL CLASSROOM (W / FLOORBOX) - RISER DIAGRAM | SCALE: NTS | 1

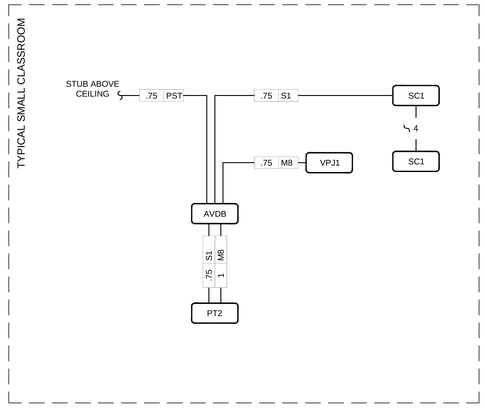

TYPICAL FOR ROOMS:
SC208, SC308, SC320

TYPICAL SMALL CLASSROOM (W / POKE-THRU) - RISER DIAGRAM | SCALE: NTS | 2

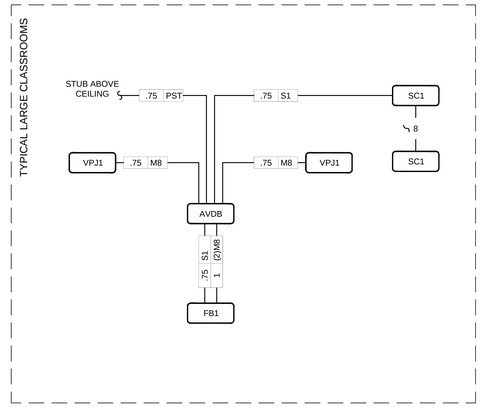

TYPICAL FOR ROOMS:
SC111, SC122

TYPICAL LARGE CLASSROOM (W / FLOORBOX) - RISER DIAGRAM | SCALE: NTS | 3

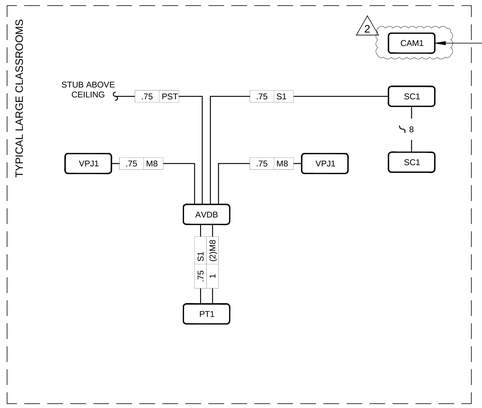

2 TYPICAL FOR ROOMS:
SC212, SC213, SC216, SC217, SC218, SC226, SC309, SC312, SC315, SC316, SC326

TYPICAL LARGE CLASSROOM (W / POKE-THRU) - RISER DIAGRAM | SCALE: NTS | 4

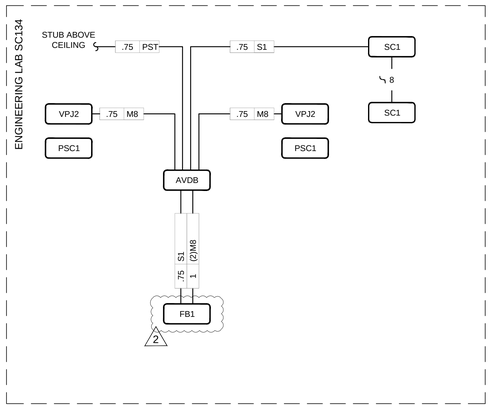

ENGINEERING LAB SC134 - RISER DIAGRAM | SCALE: NTS | 5

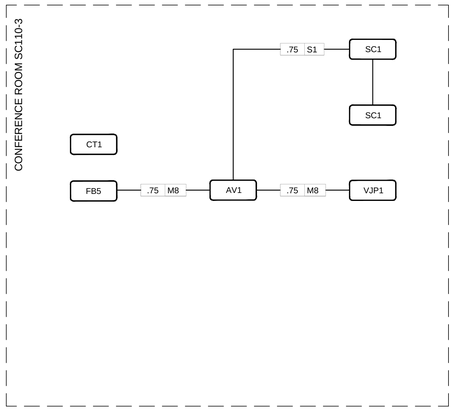

CONFERENCE ROOM SC110-3 - RISER DIAGRAM | SCALE: NTS | 6

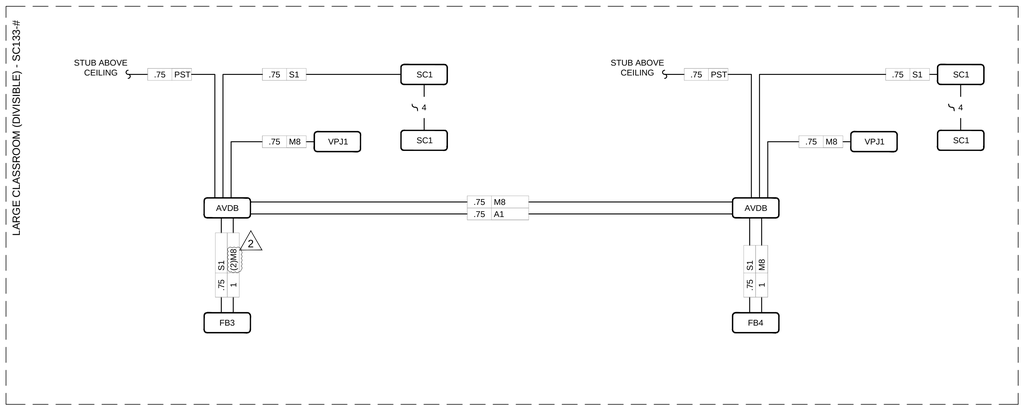

LARGE CLASSROOM (DIVISIBLE) - SC113-# - RISER DIAGRAM | SCALE: NTS | 7

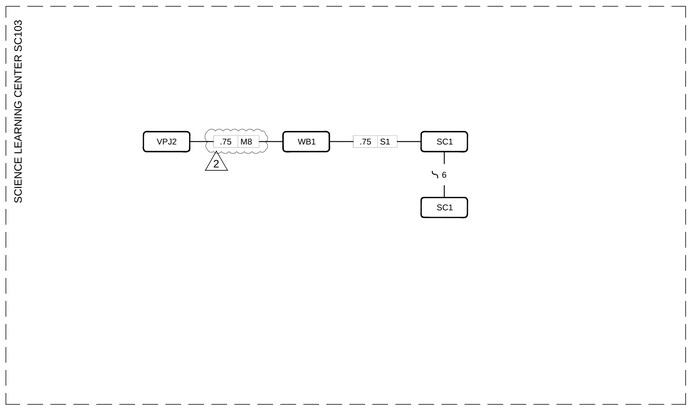

SCIENCE LEARNING CENTER SC103 | SCALE: NTS | 8

hga.
1918 Main Street, Third Floor
Santa Monica, California 90405
Telephone 310.557.7600

STRUCTURAL ENGINEER
SAIFUL BOUQUET
155 N LAKE AVE
PASADENA, CA 91101
626-304-2616

MECHANICAL & PLUMBING ENGINEER
STANTEC CONSULTING INC
14130 RIVERSIDE DR. # 201
SHERMAN OAKS, CA 91423
818-377-8220

ELECTRICAL ENGINEER
FBA ENGINEERING
150 PAULARINO AVE. #A120
COSTA MESA, CA 92626
949-852-9995

CIVIL ENGINEER
KPFF CONSULTING ENGINEERS
700 SOUTH FLOWER ST. #2100
LOS ANGELES, CA 90017
213-418-0201

LANDSCAPE ARCHITECT
LYNN CAPOUYA, INC.
17992 MITCHELL SOUTH, #110
IRVINE, CA 92614
949-756-0150

LABORATORY CONSULTANT
RESEARCH FACILITIES DESIGN
3965 FIFTH AVE. #400
SAN DIEGO, CA 92103
619-297-0159

SCIENCE CENTER
SANTA ANA COLLEGE
RANCHO SANTIAGO COMMUNITY COLLEGE DISTRICT
1530 W. 17TH ST.
SANTA ANA, CA 92706

SANTA ANA COLLEGE

I HEREBY CERTIFY THAT THIS PLAN, SPECIFICATION OR REPORT WAS PREPARED BY ME OR UNDER MY DIRECT SUPERVISION AND I AM A DULY LICENSED ARCHITECT UNDER THE LAWS OF THE STATE OF CALIFORNIA.

LICENSED ARCHITECT — LOUIS G. MARTINEZ — No. 22163 — STATE OF CALIFORNIA — SEPTEMBER 30, 2017 RENEWAL DATE

REGISTERED PROFESSIONAL ENGINEER — No. 22163 — STATE OF CALIFORNIA

NAME: HOOSHANG KHOSROVANI
DATE: JULY 06, 2017
REGISTRATION NUMBER: 22163

NO	DESCRIPTION	DATE
2	Addendum #2	09/01/2017

ISSUANCE HISTORY - THIS SHEET

DRAWN BY: MD, EC | REVIEW BY: MD

HGA NO: 3584-001-00

AV RISERS

DATE: JULY 06, 2017

AV501

ADDENDA PACKAGE

©COPYRIGHT HAMMEL, GREEN AND ABRAHAMSON, INC.

12/13/2016 10:29:03 AM C:\Users\emurillo\Documents\SAC_SC_AV_emurillo.rvt MD, EC

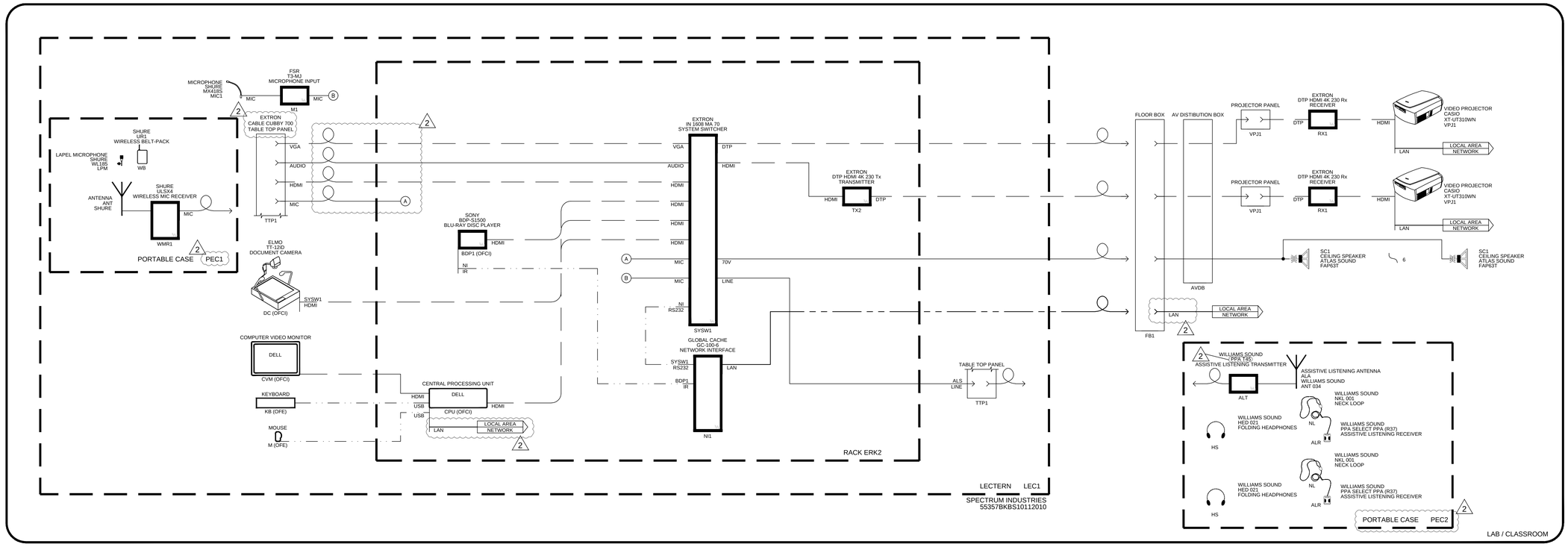

ROOMS: SC111, SC122

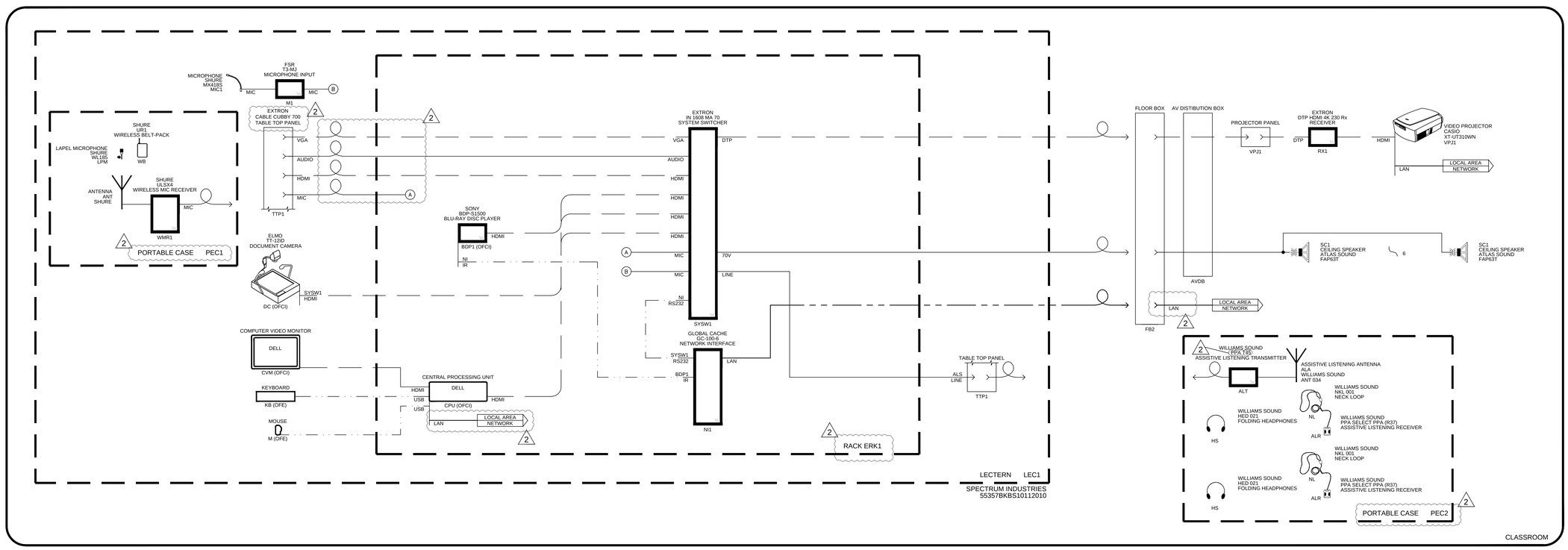

ROOMS: SC115, SC118

hga.
1918 Main Street, Third Floor
Santa Monica, California 90405
Telephone 310.557.7600

STRUCTURAL ENGINEER
SAIFUL BOUQUET
155 N LAKE AVE
PASADENA, CA 91101
626-304-2616

MECHANICAL & PLUMBING ENGINEER
STANTEC CONSULTING INC
14130 RIVERSIDE DR. # 201
SHERMAN OAKS, CA 91423
818-377-8220

ELECTRICAL ENGINEER
FBA ENGINEERING
150 PAULARINO AVE. #A120
COSTA MESA, CA 92626
949-852-9995

CIVIL ENGINEER
KPFF CONSULTING ENGINEERS
700 SOUTH FLOWER ST. #2100
LOS ANGELES, CA 90017
213-418-0201

LANDSCAPE ARCHITECT
LYNN CAPOUYA, INC.
17992 MITCHELL SOUTH, #110
IRVINE, CA 92614
949-756-0150

LABORATORY CONSULTANT
RESEARCH FACILITIES DESIGN
3965 FIFTH AVE. #400
SAN DIEGO, CA 92103
619-297-0159

SCIENCE CENTER
SANTA ANA COLLEGE

RANCHO SANTIAGO COMMUNITY COLLEGE DISTRICT

1530 W. 17TH ST.
SANTA ANA, CA 92706

SANTA ANA COLLEGE

I HEREBY CERTIFY THAT THIS PLAN, SPECIFICATION OR REPORT WAS PREPARED BY ME OR UNDER MY DIRECT SUPERVISION AND THAT I AM A DULY LICENSED ARCHITECT UNDER THE LAWS OF THE STATE OF CALIFORNIA.

LICENSED ARCHITECT — JAMES G. MAY — No. 22163 — REGISTERED PROFESSIONAL ENGINEER — STATE OF CALIFORNIA — SEPTEMBER 30, 2017 RENEWAL DATE

NAME: HOOSHANG KHOSROVANI
DATE: JULY 06, 2017
REGISTRATION NUMBER: 22163

NO	DESCRIPTION	DATE
2	Addendum #2	09/01/2017

ISSUANCE HISTORY - THIS SHEET

DRAWN BY: MD, EC | REVIEW BY: MD

HGA NO: 3584-001-00

AV ONELINE DIAGRAMS

DATE: JULY 06, 2017

AV601

ADDENDA PACKAGE

©COPYRIGHT HAMMEL, GREEN AND ABRAHAMSON, INC.

MD, EC 12/13/2016 10:29:03 AM C:\Users\amurillo\Documents\SAC_SC_AV_amurillo.rvt

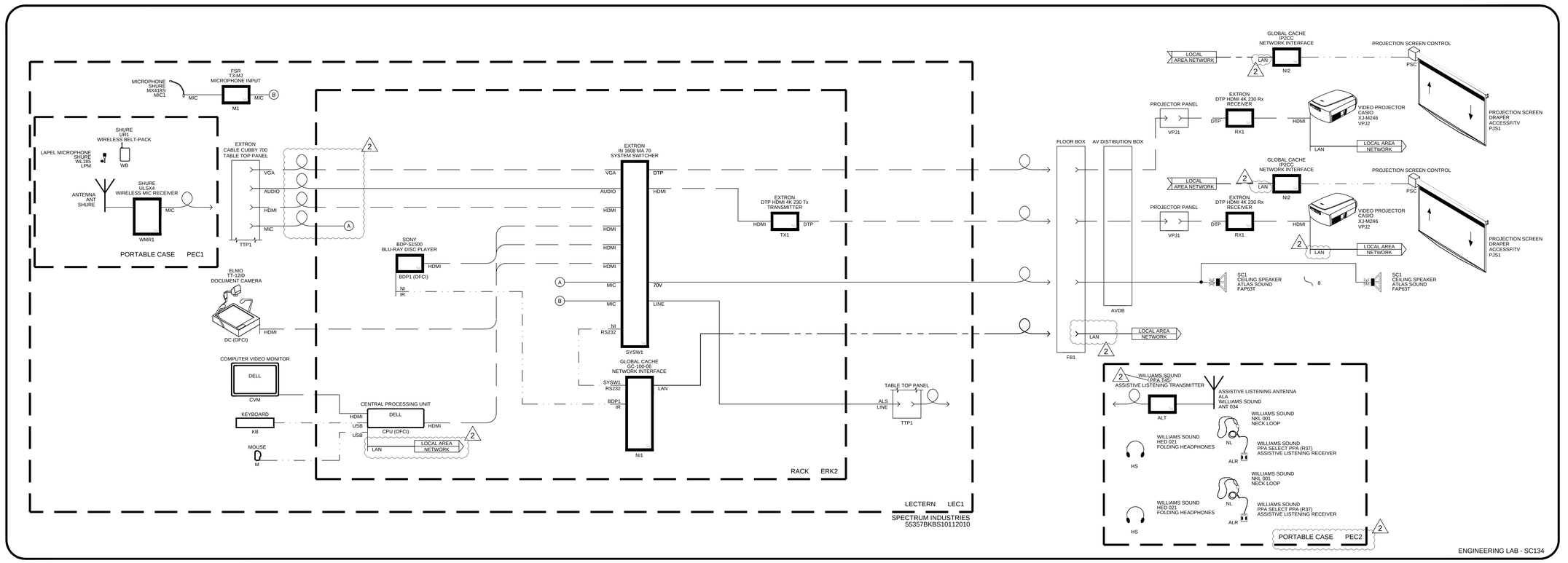

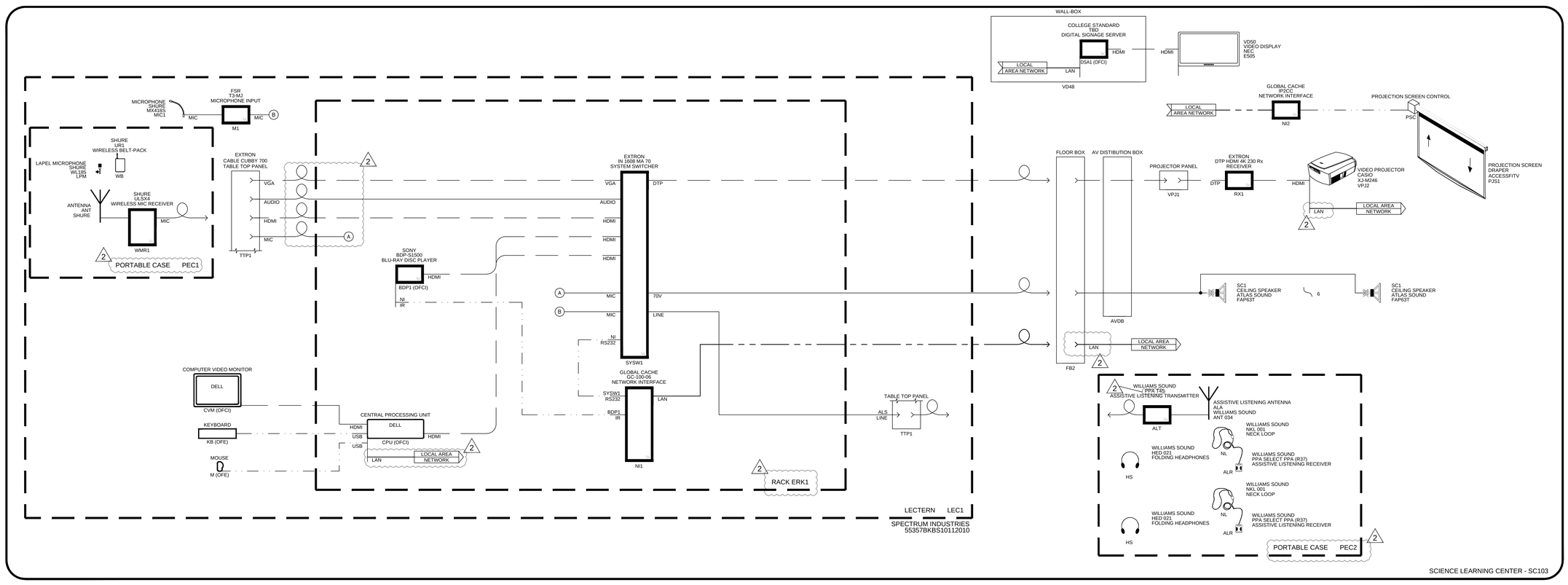

hga.
1918 Main Street, Third Floor
Santa Monica, California 90405
Telephone 310.557.7600

STRUCTURAL ENGINEER
SAIFUL BOUQUET
155 N LAKE AVE
PASADENA, CA 91101
626-304-2616

MECHANICAL & PLUMBING ENGINEER
STANTEC CONSULTING INC
14130 RIVERSIDE DR. # 201
SHERMAN OAKS, CA 91423
818-377-8220

ELECTRICAL ENGINEER
FBA ENGINEERING
150 PAULARINO AVE. #A120
COSTA MESA, CA 92626
949-852-9995

CIVIL ENGINEER
KPFF CONSULTING ENGINEERS
700 SOUTH FLOWER ST. #2100
LOS ANGELES, CA 90017
213-418-0201

LANDSCAPE ARCHITECT
LYNN CAPOUYA, INC.
17992 MITCHELL SOUTH, #110
IRVINE, CA 92614
949-756-0150

LABORATORY CONSULTANT
RESEARCH FACILITIES DESIGN
3965 FIFTH AVE. #400
SAN DIEGO, CA 92103
619-297-0159

SCIENCE CENTER
SANTA ANA COLLEGE

RANCHO SANTIAGO COMMUNITY COLLEGE DISTRICT

1530 W. 17TH ST.
SANTA ANA, CA 92706

SANTA ANA COLLEGE

I HEREBY CERTIFY THAT THIS PLAN, SPECIFICATION OR REPORT WAS PREPARED BY ME OR UNDER MY DIRECT SUPERVISION AND THAT I AM A DULY LICENSED ARCHITECT UNDER THE LAWS OF THE STATE OF CALIFORNIA.

LICENSED ARCHITECT — STATE OF CALIFORNIA — HOOSHANG KHOSROVANI — SEPTEMBER 30, 2017 RENEWAL DATE

REGISTERED PROFESSIONAL ENGINEER — No. 22163 — MECHANICAL — STATE OF CALIFORNIA

NAME: HOOSHANG KHOSROVANI
DATE: JULY 06, 2017
REGISTRATION NUMBER: 22163

NO	DESCRIPTION	DATE
2	Addendum #2	09/01/2017

ISSUANCE HISTORY - THIS SHEET

DRAWN BY: MD, EC	REVIEW BY: MD

HGA NO: 3584-001-00

AV ONELINE DIAGRAMS

DATE: JULY 06, 2017

AV602

ADDENDA PACKAGE

©COPYRIGHT HAMMEL, GREEN AND ABRAHAMSON, INC.

M0, EC 12/13/2016 10:29:03 AM C:\Users\emurillo\Documents\SAC_SC_AV_emurillo.rvt

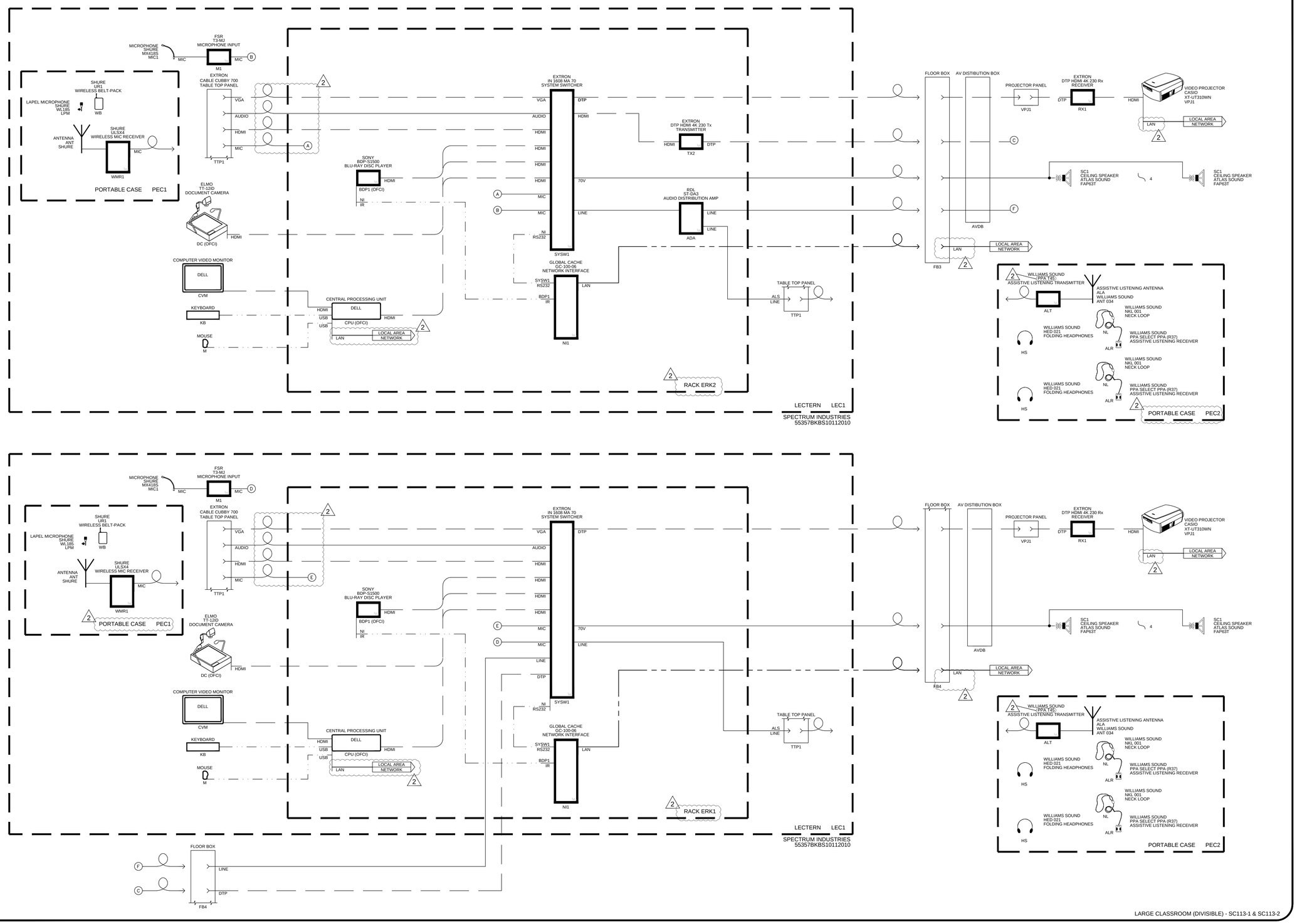

LARGE CLASSROOM (DIVISIBLE) - SC113-1 & SC113-2

1918 Main Street, Third Floor
Santa Monica, California 90405
Telephone 310.557.7600

STRUCTURAL ENGINEER
SAIFUL BOUQUET
155 N LAKE AVE
PASADENA, CA 91101
626-304-2616

MECHANICAL & PLUMBING ENGINEER
STANTEC CONSULTING INC
14130 RIVERSIDE DR. # 201
SHERMAN OAKS, CA 91423
818-377-8220

ELECTRICAL ENGINEER
FBA ENGINEERING
150 PAULARINO AVE. #A120
COSTA MESA, CA 92626
949-852-9995

CIVIL ENGINEER
KPFF CONSULTING ENGINEERS
700 SOUTH FLOWER ST. #2100
LOS ANGELES, CA 90017
213-418-0201

LANDSCAPE ARCHITECT
LYNN CAPOUYA, INC.
17992 MITCHELL SOUTH, #110
IRVINE, CA 92614
949-756-0150

LABORATORY CONSULTANT
RESEARCH FACILITIES DESIGN
3965 FIFTH AVE. #400
SAN DIEGO, CA 92103
619-297-0159

SCIENCE CENTER
SANTA ANA COLLEGE

RANCHO SANTIAGO COMMUNITY COLLEGE DISTRICT

1530 W. 17TH ST.
SANTA ANA, CA 92706

SANTA ANA COLLEGE

I HEREBY CERTIFY THAT THIS PLAN, SPECIFICATION OR REPORT WAS PREPARED BY ME OR UNDER MY DIRECT SUPERVISION AND THAT I AM A DULY LICENSED ARCHITECT UNDER THE LAWS OF THE STATE OF CALIFORNIA.

LICENSED ARCHITECT — JAMES G. MAY — No. 22163 — REGISTERED PROFESSIONAL ENGINEER — STATE OF CALIFORNIA — SEPTEMBER 30, 2017 RENEWAL DATE

NAME: HOOSHANG KHOSROVANI
DATE: JULY 06, 2017
REGISTRATION NUMBER: 22163

NO	DESCRIPTION	DATE
2	Addendum #2	09/01/2017

ISSUANCE HISTORY - THIS SHEET

DRAWN BY: MD, EC | REVIEW BY: MD

HGA NO: 3584-001-00

AV ONELINE DIAGRAMS

DATE: JULY 06, 2017

AV603

ADDENDA PACKAGE

©COPYRIGHT HAMMEL, GREEN AND ABRAHAMSON, INC.

MD, EC 12/13/2016 10:29:03 AM C:\Users\amurillo\Documents\SAC_SC_AV_amurillo.rvt

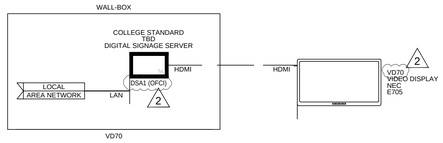

CORRIDORS SC100-1 & SC200-1

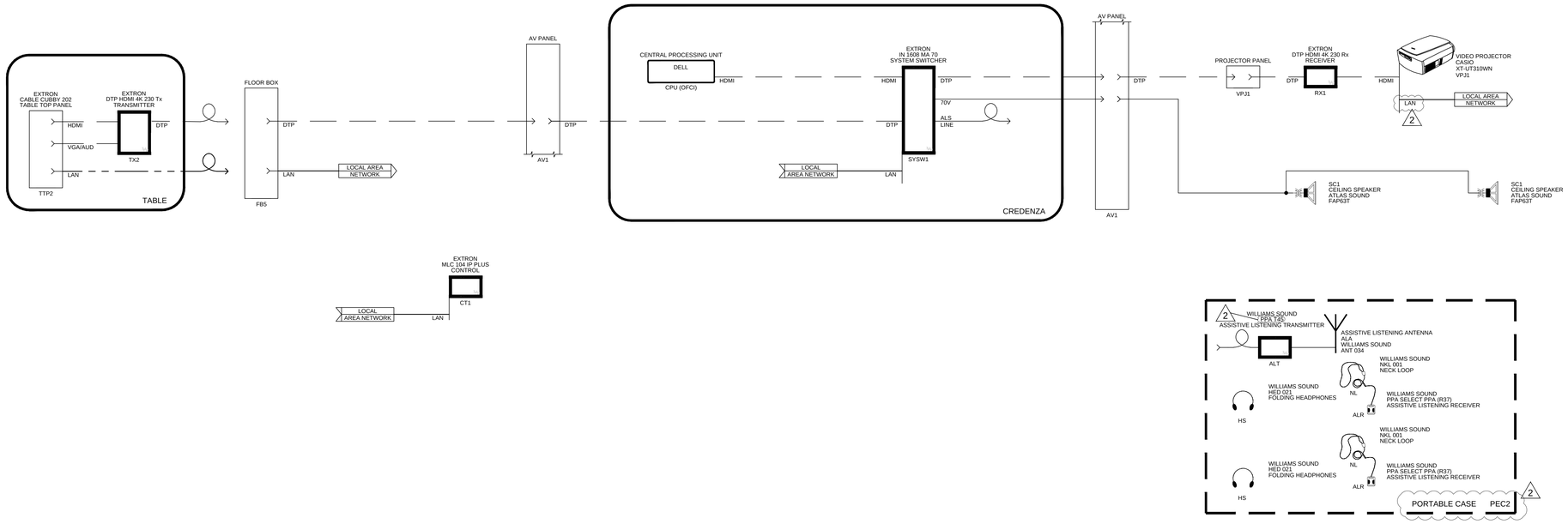

CONFERENCE ROOM - SC110-3

HGA.
1918 Main Street, Third Floor
Santa Monica, California 90405
Telephone 310.557.7600

STRUCTURAL ENGINEER
SAIFUL BOUQUET
155 N LAKE AVE
PASADENA, CA 91101
626-304-2616

MECHANICAL & PLUMBING ENGINEER
STANTEC CONSULTING INC
14130 RIVERSIDE DR. # 201
SHERMAN OAKS, CA 91423
818-377-8220

ELECTRICAL ENGINEER
FBA ENGINEERING
150 PAULARINO AVE. #A120
COSTA MESA, CA 92626
949-852-9995

CIVIL ENGINEER
KPFF CONSULTING ENGINEERS
700 SOUTH FLOWER ST. #2100
LOS ANGELES, CA 90017
213-418-0201

LANDSCAPE ARCHITECT
LYNN CAPOUYA, INC.
17992 MITCHELL SOUTH, #110
IRVINE, CA 92614
949-756-0150

LABORATORY CONSULTANT
RESEARCH FACILITIES DESIGN
3965 FIFTH AVE. #400
SAN DIEGO, CA 92103
619-297-0159

SCIENCE CENTER
SANTA ANA COLLEGE

RANCHO SANTIAGO
COMMUNITY COLLEGE
DISTRICT

1530 W. 17TH ST.
SANTA ANA, CA 92706

SANTA ANA
COLLEGE

I HEREBY CERTIFY THAT THIS PLAN, SPECIFICATION OR REPORT WAS PREPARED BY ME OR UNDER MY DIRECT SUPERVISION AND THAT I AM A DULY LICENSED ARCHITECT UNDER THE LAWS OF THE STATE OF CALIFORNIA.

LICENSED ARCHITECT
JAMES G. MARTIN
C-13036
SEPTEMBER 30, 2017
REGISTRATION DATE
STATE OF CALIFORNIA

LICENSED PROFESSIONAL ENGINEER
MUSTAFA KHOSROVANI
No. 22163
SEPTEMBER 30, 2017
REGISTRATION DATE
STATE OF CALIFORNIA

NAME: HOOSHANG KHOSROVANI
DATE: JULY 06, 2017
REGISTRATION NUMBER: 22163

NO	DESCRIPTION	DATE
2	Addendum #2	09/01/2017

ISSUANCE HISTORY - THIS SHEET

DRAWN BY: MD, EC | REVIEW BY: MD

HGA NO: 3584-001-00

AV ONELINE DIAGRAMS

DATE: JULY 06, 2017

AV604

ADDENDA PACKAGE

©COPYRIGHT HAMMEL, GREEN AND ABRAHAMSON, INC.

MD, EC 12/13/2016 10:29:03 AM C:\Users\amurillo\Documents\SAC_SC_AV_amurillo.rvt

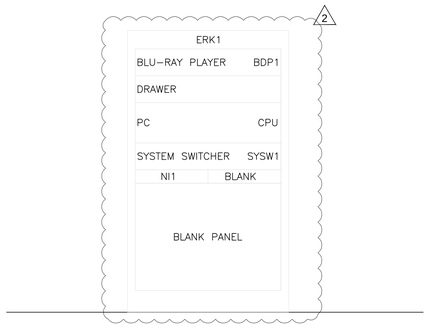

ERK1 - RACK ELEVATION | SCALE: NTS | 1

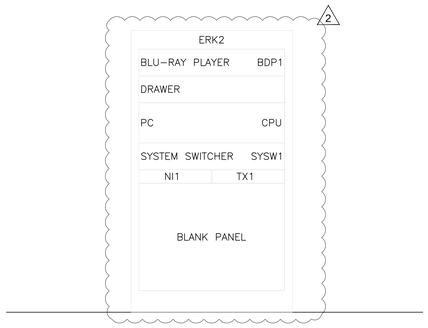

ERK2 - RACK ELEVATION | SCALE: NTS | 2

1918 Main Street, Third Floor
Santa Monica, California 90405
Telephone 310.557.7600

STRUCTURAL ENGINEER
SAIFUL BOUQUET
155 N LAKE AVE
PASADENA, CA 91101
626-304-2616

MECHANICAL & PLUMBING ENGINEER
STANTEC CONSULTING INC
14130 RIVERSIDE DR. # 201
SHERMAN OAKS, CA 91423
818-377-8220

ELECTRICAL ENGINEER
FBA ENGINEERING
150 PAULARINO AVE. #A120
COSTA MESA, CA 92626
949-852-9995

CIVIL ENGINEER
KPFF CONSULTING ENGINEERS
700 SOUTH FLOWER ST. #2100
LOS ANGELES, CA 90017
213-418-0201

LANDSCAPE ARCHITECT
LYNN CAPOUYA, INC.
17992 MITCHELL SOUTH, #110
IRVINE, CA 92614
949-756-0150

LABORATORY CONSULTANT
RESEARCH FACILITIES DESIGN
3965 FIFTH AVE. #400
SAN DIEGO, CA 92103
619-297-0159

SCIENCE CENTER
SANTA ANA COLLEGE

RANCHO SANTIAGO COMMUNITY COLLEGE DISTRICT

1530 W. 17TH ST.
SANTA ANA, CA 92706

SANTA ANA COLLEGE

I HEREBY CERTIFY THAT THIS PLAN, SPECIFICATION OR REPORT WAS PREPARED BY ME OR UNDER MY DIRECT SUPERVISION AND THAT I AM A DULY LICENSED ARCHITECT UNDER THE LAWS OF THE STATE OF CALIFORNIA.

LICENSED ARCHITECT 29936 RENEWAL DATE SEPTEMBER 30, 2017 STATE OF CALIFORNIA

REGISTERED PROFESSIONAL ENGINEER No. 22163 MECHANICAL STATE OF CALIFORNIA

NAME: HOOSHANG KHOSROVANI
DATE: JULY 06, 2017
REGISTRATION NUMBER: 22163

NO	DESCRIPTION	DATE
2	Addendum #2	09/01/2017

ISSUANCE HISTORY - THIS SHEET

DRAWN BY: MD, EC | REVIEW BY: MD

HGA NO: 3584-001-00

AV EQUIPMENT RACK ELEVATIONS

DATE: JULY 06, 2017

AV651

ADDENDA PACKAGE

©COPYRIGHT HAMMEL, GREEN AND ABRAHAMSON, INC.

MD, EC 12/13/2016 10:29:03 AM C:\Users\amuffo\Documents\SAC_SC_AV_amuffo.rvt

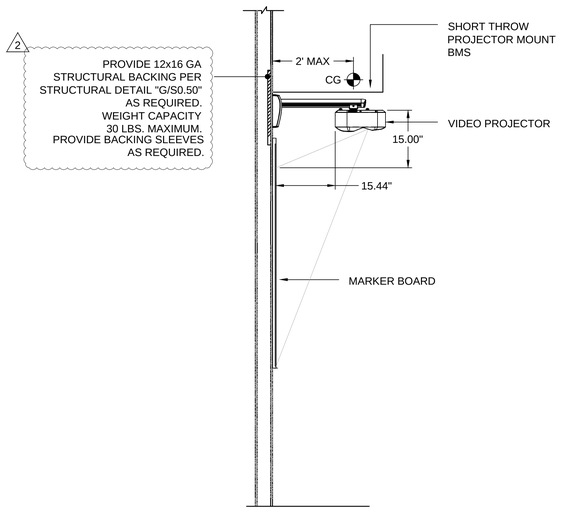

SIDE VIEW

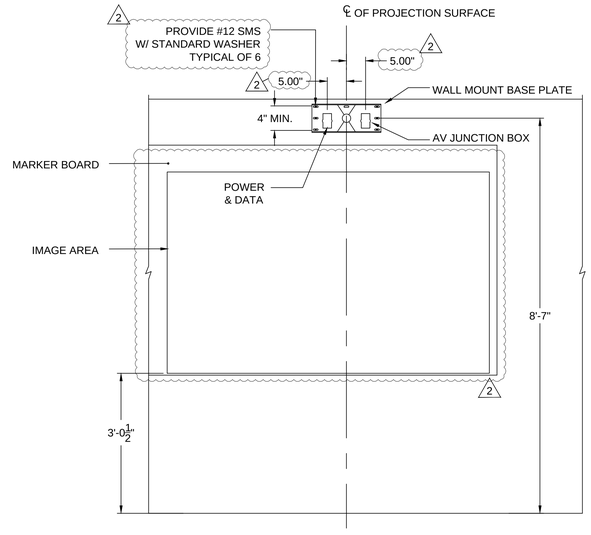

FRONT VIEW

WALL MOUNTED VIDEO PROJECTOR DETAIL

SCALE: NTS

1

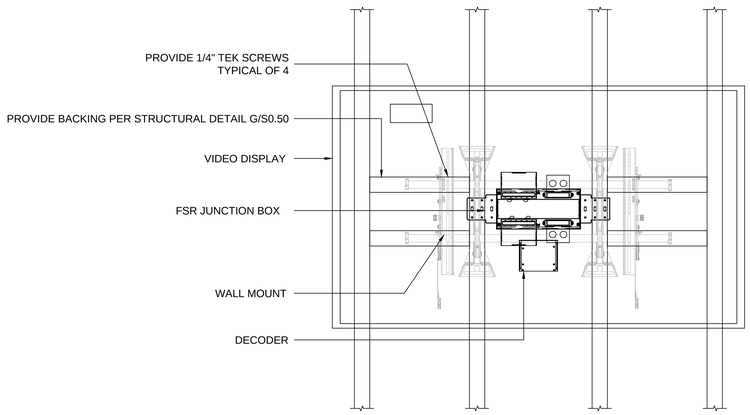

FRONT VIEW

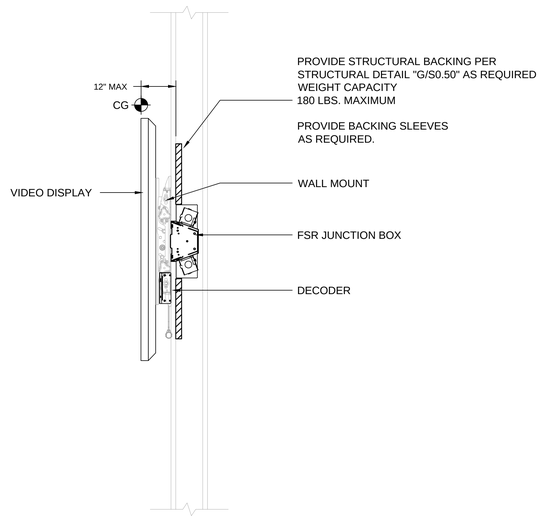

SIDE VIEW

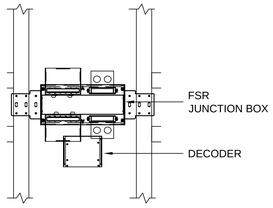

JUNCTION BOX FRONT VIEW

VIDEO DISPLAY WALL MOUNTING DETAIL "VD##"

SCALE: NTS

2

HGA
1918 Main Street, Third Floor
Santa Monica, California 90405
Telephone 310.557.7600

STRUCTURAL ENGINEER
SAIFUL BOUQUET
155 N LAKE AVE
PASADENA, CA 91101
626-304-2616

MECHANICAL & PLUMBING ENGINEER
STANTEC CONSULTING INC
14130 RIVERSIDE DR. # 201
SHERMAN OAKS, CA 91423
818-377-8220

ELECTRICAL ENGINEER
FBA ENGINEERING
150 PAULARINO AVE. #A120
COSTA MESA, CA 92626
949-852-9995

CIVIL ENGINEER
KPFF CONSULTING ENGINEERS
700 SOUTH FLOWER ST. #2100
LOS ANGELES, CA 90017
213-418-0201

LANDSCAPE ARCHITECT
LYNN CAPOUYA, INC.
17992 MITCHELL SOUTH, #110
IRVINE, CA 92614
949-756-0150

LABORATORY CONSULTANT
RESEARCH FACILITIES DESIGN
3965 FIFTH AVE. #400
SAN DIEGO, CA 92103
619-297-0159

SCIENCE CENTER
SANTA ANA COLLEGE

RANCHO SANTIAGO COMMUNITY COLLEGE DISTRICT

1530 W. 17TH ST.
SANTA ANA, CA 92706

SANTA ANA COLLEGE

I HEREBY CERTIFY THAT THIS PLAN, SPECIFICATION OR REPORT WAS PREPARED BY ME OR UNDER MY DIRECT SUPERVISION AND THAT I AM A DULY LICENSED ARCHITECT UNDER THE LAWS OF THE STATE OF CALIFORNIA.

LICENSED ARCHITECT
JAMES G. MAYSON
C-23036
SEPTEMBER 30, 2017
RENEWAL DATE
STATE OF CALIFORNIA

REGISTERED PROFESSIONAL ENGINEER
No. 22163
MECHANICAL
STATE OF CALIFORNIA

NAME: HOOSHANG KHOSROVANI
DATE: JULY 06, 2017
REGISTRATION NUMBER: 22163

NO	DESCRIPTION	DATE
2	Addendum #2	09/01/2017

ISSUANCE HISTORY - THIS SHEET

DRAWN BY: MD, EC | REVIEW BY: MD

HGA NO: 3584-001-00

AV DETAILS

DATE: JULY 06, 2017

AV701

ADDENDA PACKAGE

©COPYRIGHT HAMMEL, GREEN AND ABRAHAMSON, INC.

MD, EC 12/13/2016 10:29:03 AM C:\Users\amurillo\Documents\SAC_SC_AV_amurillo.rvt

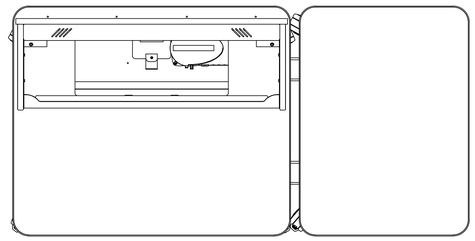

PLAN VIEW

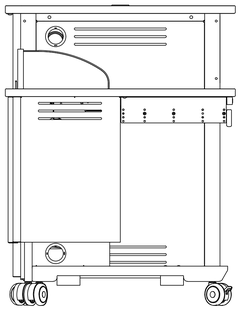

SIDE VIEW

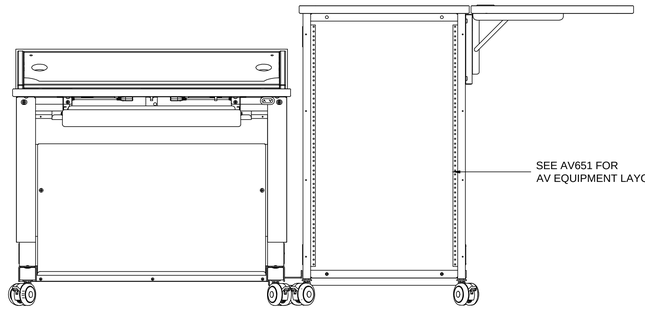

ELEVATION VIEW

NOTE:

LECTERN NEEDS TO BE MODIFIED TO ACCOMMODATE THE AV EQUIPMENT SHOWN ON DRAWING. COORDINATE FINISHES AND COLOR WITH ARCHITECT OR THE OWNER'S REPRESENTATIVE BEFORE ORDERING.

TYPICAL LECTERN DETAIL | SCALE: NTS | 1

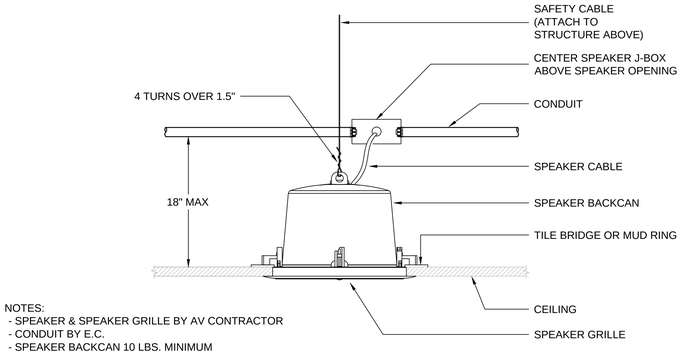

NOTES:
- SPEAKER & SPEAKER GRILLE BY AV CONTRACTOR
- CONDUIT BY E.C.
- SPEAKER BACKCAN 10 LBS. MINIMUM

SIDE VIEW OF SPEAKER

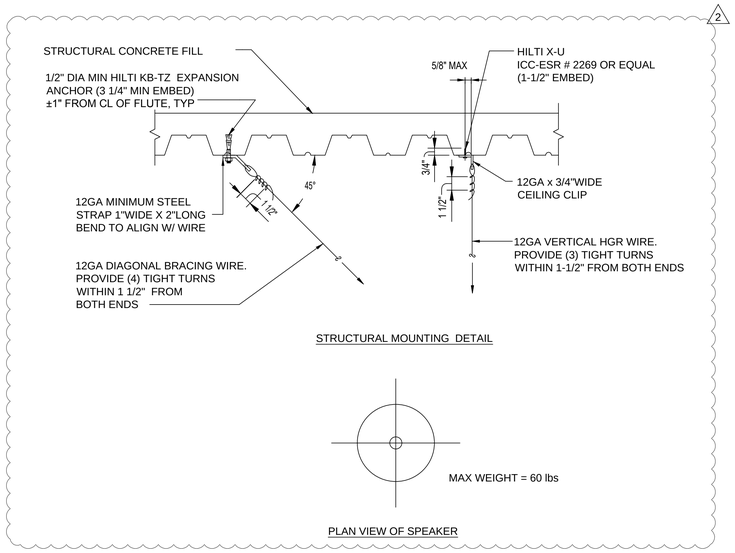

STRUCTURAL MOUNTING DETAIL

PLAN VIEW OF SPEAKER

TYPICAL CEILING SPEAKER DETAIL | SCALE: NTS | 2

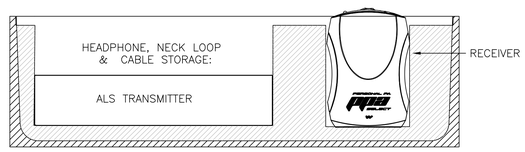

SECTION VIEW

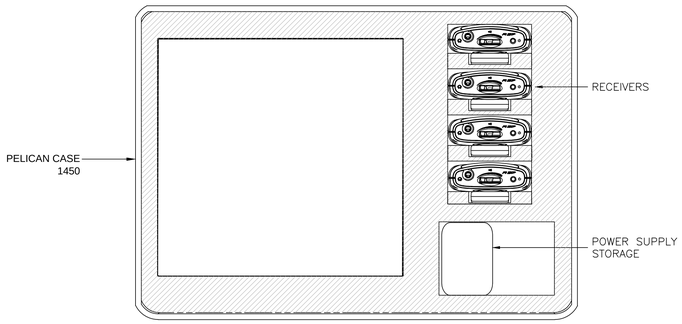

TOP VIEW

PORTABLE ALS CASE "PEC2" DETAIL | SCALE: NTS | 3

HGA
1918 Main Street, Third Floor
Santa Monica, California 90405
Telephone 310.557.7600

STRUCTURAL ENGINEER
SAIFUL BOUQUET
155 N LAKE AVE
PASADENA, CA 91101
626-304-2616

MECHANICAL & PLUMBING ENGINEER
STANTEC CONSULTING INC
14130 RIVERSIDE DR. # 201
SHERMAN OAKS, CA 91423
818-377-8220

ELECTRICAL ENGINEER
FBA ENGINEERING
150 PAULARINO AVE. #A120
COSTA MESA, CA 92626
949-852-9995

CIVIL ENGINEER
KPFF CONSULTING ENGINEERS
700 SOUTH FLOWER ST. #2100
LOS ANGELES, CA 90017
213-418-0201

LANDSCAPE ARCHITECT
LYNN CAPOUYA, INC.
17992 MITCHELL SOUTH, #110
IRVINE, CA 92614
949-756-0150

LABORATORY CONSULTANT
RESEARCH FACILITIES DESIGN
3965 FIFTH AVE. #400
SAN DIEGO, CA 92103
619-297-0159

SCIENCE CENTER
SANTA ANA COLLEGE

RANCHO SANTIAGO COMMUNITY COLLEGE DISTRICT

1530 W. 17TH ST.
SANTA ANA, CA 92706

SANTA ANA COLLEGE

I HEREBY CERTIFY THAT THIS PLAN, SPECIFICATION OR REPORT WAS PREPARED BY ME OR UNDER MY DIRECT SUPERVISION AND THAT I AM A DULY LICENSED ARCHITECT UNDER THE LAWS OF THE STATE OF CALIFORNIA.

LICENSED ARCHITECT — 23936 — HOOSHANG D. KHOSROVANI — STATE OF CALIFORNIA — EXPIRATION/RENEWAL DATE: SEPTEMBER 30, 2017

PROFESSIONAL ENGINEER — No. 22163 — MECHANICAL — STATE OF CALIFORNIA

NAME: HOOSHANG KHOSROVANI
DATE: JULY 06, 2017
REGISTRATION NUMBER: 22163

NO	DESCRIPTION	DATE
2	Addendum #2	09/01/2017

ISSUANCE HISTORY - THIS SHEET

DRAWN BY: MD, EC | REVIEW BY: MD

HGA NO: 3584-001-00

AV DETAILS

DATE: JULY 06, 2017

AV703

ADDENDA PACKAGE

©COPYRIGHT HAMMEL, GREEN AND ABRAHAMSON, INC.

MD, EC 12/13/2016 10:29:03 AM C:\Users\tamurfid\Documents\SAC_SC_AV_amurfid.rvt

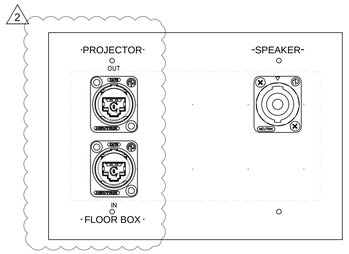

AV PANEL "AV1" LAYOUT | SCALE: NTS | 1

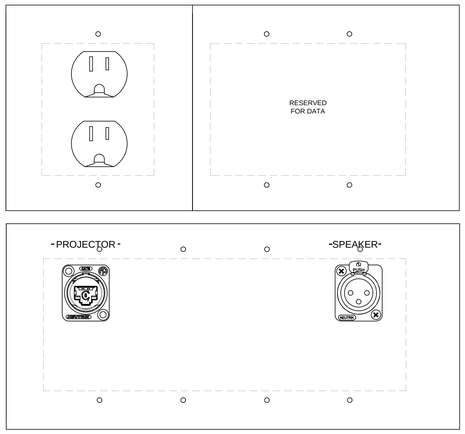

WALL BOX "WB1" PANEL LAYOUT | SCALE: NTS | 2

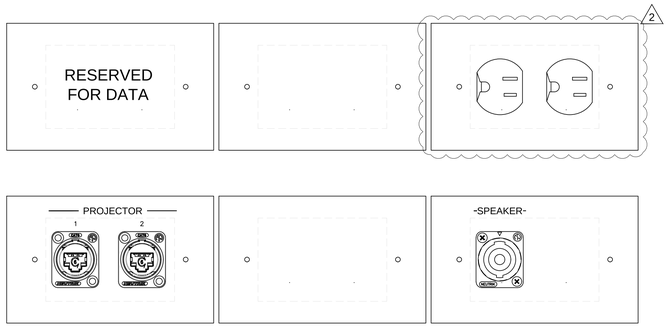

FLOOR BOX "FB1" LAYOUT | SCALE: NTS | 3

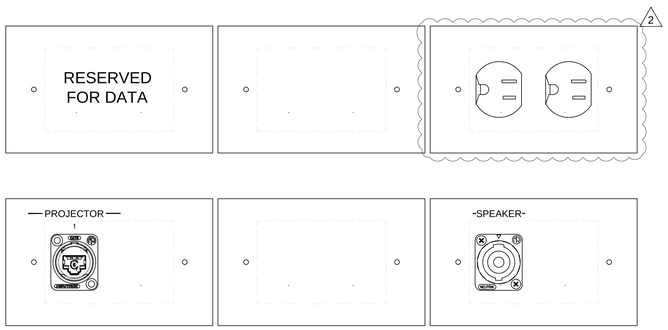

FLOOR BOX "FB2" LAYOUT | SCALE: NTS | 4

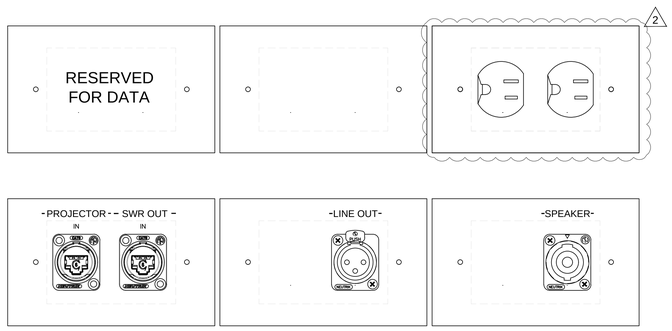

FLOOR BOX "FB3" LAYOUT | SCALE: NTS | 5

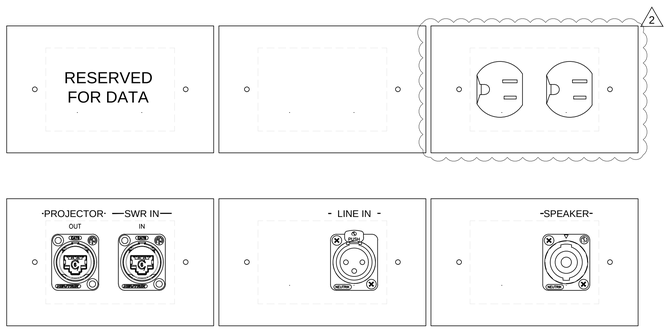

FLOOR BOX "FB4" LAYOUT | SCALE: NTS | 6

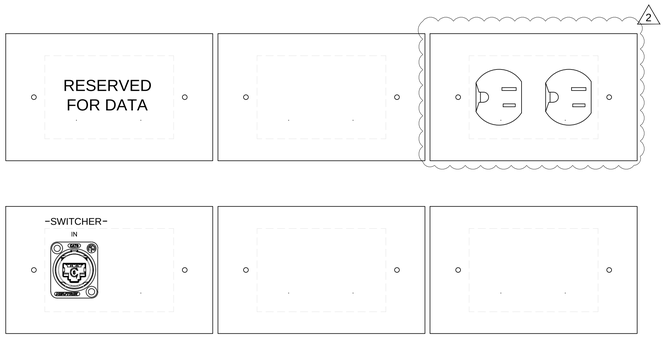

FLOOR BOX "FB5" LAYOUT | SCALE: NTS | 4

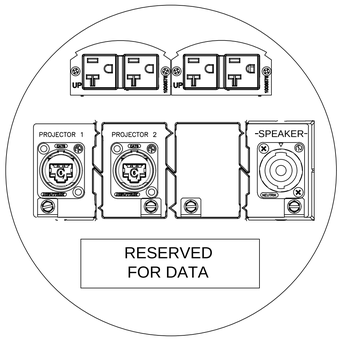

POKE-THRU "PT1" LAYOUT | SCALE: NTS | 7

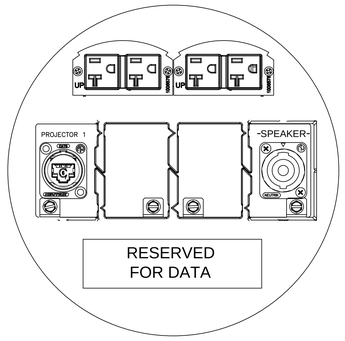

POKE-THRU "PT2" LAYOUT | SCALE: NTS | 8

HGA
1918 Main Street, Third Floor
Santa Monica, California 90405
Telephone 310.557.7600

STRUCTURAL ENGINEER
SAIFUL BOUQUET
155 N LAKE AVE
PASADENA, CA 91101
626-304-2616

MECHANICAL & PLUMBING ENGINEER
STANTEC CONSULTING INC
14130 RIVERSIDE DR. # 201
SHERMAN OAKS, CA 91423
818-377-8220

ELECTRICAL ENGINEER
FBA ENGINEERING
150 PAULARINO AVE. #A120
COSTA MESA, CA 92626
949-852-9995

CIVIL ENGINEER
KPFF CONSULTING ENGINEERS
700 SOUTH FLOWER ST. #2100
LOS ANGELES, CA 90017
213-418-0201

LANDSCAPE ARCHITECT
LYNN CAPOUYA, INC.
17992 MITCHELL SOUTH, #110
IRVINE, CA 92614
949-756-0150

LABORATORY CONSULTANT
RESEARCH FACILITIES DESIGN
3965 FIFTH AVE. #400
SAN DIEGO, CA 92103
619-297-0159

SCIENCE CENTER
SANTA ANA COLLEGE
RANCHO SANTIAGO COMMUNITY COLLEGE DISTRICT
1530 W. 17TH ST.
SANTA ANA, CA 92706

SANTA ANA COLLEGE

I HEREBY CERTIFY THAT THIS PLAN, SPECIFICATION OR REPORT WAS PREPARED BY ME OR UNDER MY DIRECT SUPERVISION AND THAT I AM A DULY LICENSED ARCHITECT UNDER THE LAWS OF THE STATE OF CALIFORNIA.

LICENSED ARCHITECT
JAMES G. MATTEN
No. 22163
SEPTEMBER 30, 2017
RENEWAL DATE
STATE OF CALIFORNIA

LICENSED PROFESSIONAL ENGINEER
No. 22163
MECHANICAL
STATE OF CALIFORNIA

NAME: HOOSHANG KHOSROVANI
DATE: JULY 06, 2017
REGISTRATION NUMBER: 22163

NO	DESCRIPTION	DATE
2	Addendum #2	09/01/2017

ISSUANCE HISTORY - THIS SHEET

DRAWN BY: MD, EC | REVIEW BY: MD

HGA NO: 3584-001-00

FACILITY PANEL DETAILS

DATE: JULY 06, 2017

AV751

ADDENDA PACKAGE

©COPYRIGHT HAMMEL, GREEN AND ABRAHAMSON, INC.

MD, EC 12/13/2016 10:29:03 AM C:\Users\amurillo\Documents\SAC_SC_AV_amurillo.rvt

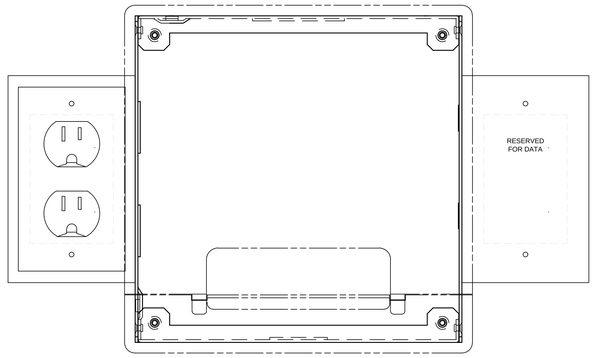

VIDEO DISPLAY "VD50" & "VD70" | SCALE: NTS | 1

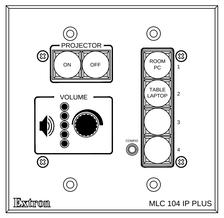

CONTROL PANEL "CT1" LAYOUT | SCALE: NTS | 2

2

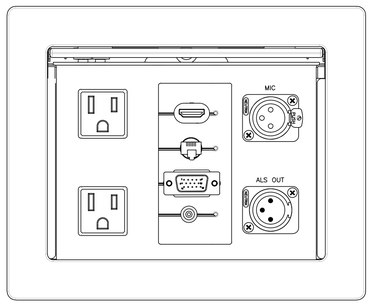

TABLE TOP PANEL "TTP1" LAYOUT | SCALE: NTS | 3

2

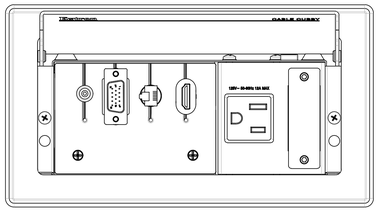

TABLE TOP PANEL "TTP2" LAYOUT | SCALE: NTS | 4

1918 Main Street, Third Floor
Santa Monica, California 90405
Telephone 310.557.7600

STRUCTURAL ENGINEER
SAIFUL BOUQUET
155 N LAKE AVE
PASADENA, CA 91101
626-304-2616

MECHANICAL & PLUMBING ENGINEER
STANTEC CONSULTING INC
14130 RIVERSIDE DR. # 201
SHERMAN OAKS, CA 91423
818-377-8220

ELECTRICAL ENGINEER
FBA ENGINEERING
150 PAULARINO AVE. #A120
COSTA MESA, CA 92626
949-852-9995

CIVIL ENGINEER
KPFF CONSULTING ENGINEERS
700 SOUTH FLOWER ST. #2100
LOS ANGELES, CA 90017
213-418-0201

LANDSCAPE ARCHITECT
LYNN CAPOUYA, INC.
17992 MITCHELL SOUTH, #110
IRVINE, CA 92614
949-756-0150

LABORATORY CONSULTANT
RESEARCH FACILITIES DESIGN
3965 FIFTH AVE. #400
SAN DIEGO, CA 92103
619-297-0159

SCIENCE CENTER
SANTA ANA COLLEGE

RANCHO SANTIAGO COMMUNITY COLLEGE DISTRICT

1530 W. 17TH ST.
SANTA ANA, CA 92706

SANTA ANA COLLEGE

I HEREBY CERTIFY THAT THIS PLAN, SPECIFICATION OR REPORT WAS PREPARED BY ME OR UNDER MY DIRECT SUPERVISION AND THAT I AM A DULY LICENSED ARCHITECT UNDER THE LAWS OF THE STATE OF CALIFORNIA.

LICENSED ARCHITECT No. 29936 RENEWAL DATE SEPTEMBER 30, 2017 STATE OF CALIFORNIA

REGISTERED PROFESSIONAL ENGINEER No. 22163 ELECTRICAL STATE OF CALIFORNIA

NAME: HOOSHANG KHOSROVANI
DATE: JULY 06, 2017
REGISTRATION NUMBER: 22163

NO	DESCRIPTION	DATE
2	Addendum #2	09/01/2017

ISSUANCE HISTORY - THIS SHEET

DRAWN BY: MD, EC | REVIEW BY: MD

HGA NO: 3584-001-00

FACILITY PANEL DETAILS

DATE: JULY 06, 2017

AV752

ADDENDA PACKAGE

©COPYRIGHT HAMMEL, GREEN AND ABRAHAMSON, INC.

MD, EC 12/13/2016 10:29:03 AM C:\Users\amuffin\Documents\SAC_SC_AV_amuffin.rvt

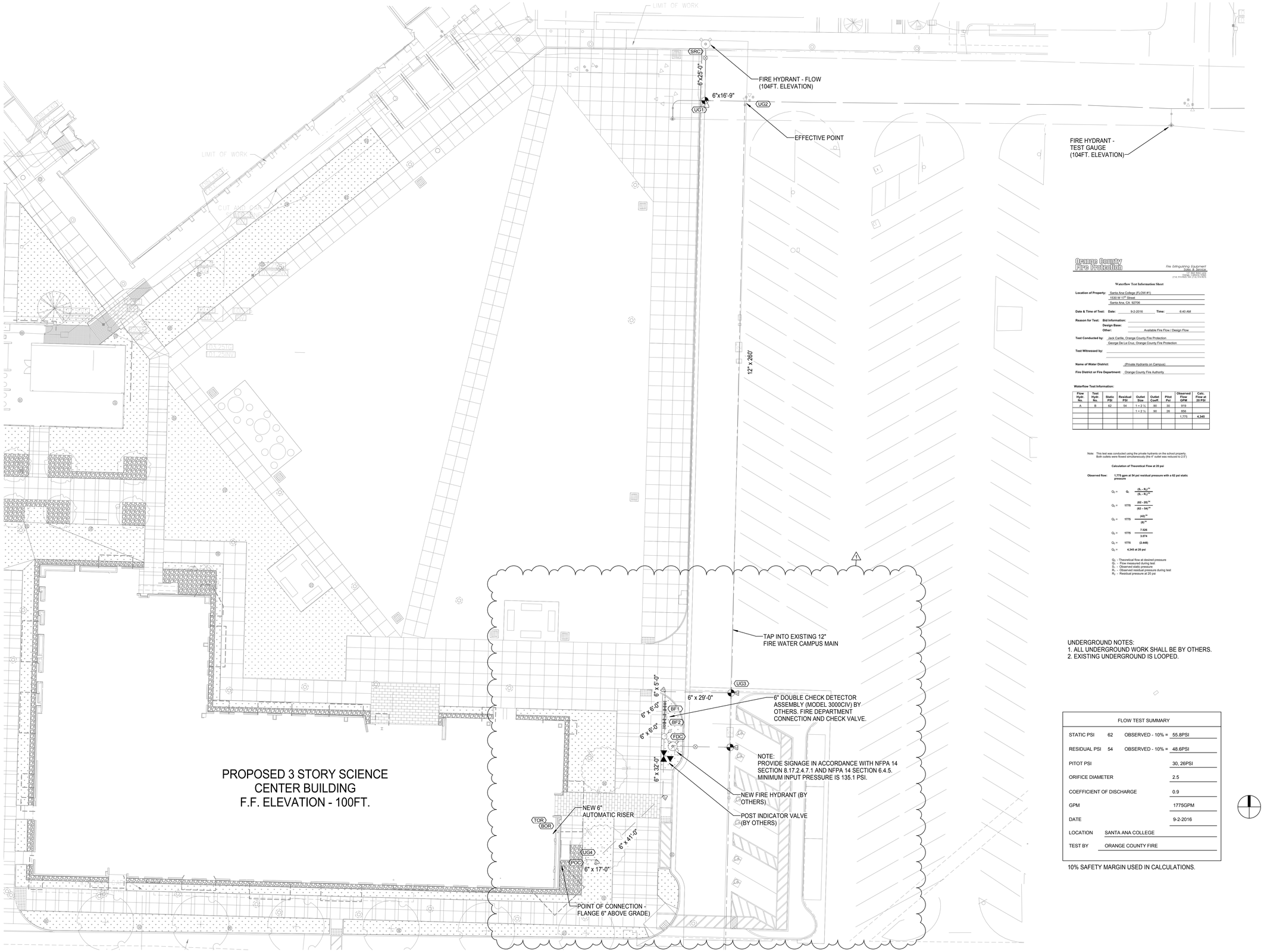

THIS DRAWING IS FOR HYDRAULIC REFERENCE ONLY. PLEASE REFER TO CIVIL SHEET C1.50 AND C5.01 FOR ADDITIONAL INFORMATION.

Orange County Fire Protection
Fire Extinguishing Equipment Sales & Service
Local State Lic.
(714) 974-6525 Fax: (714) 974-6293

Waterflow Test Information Sheet

Location of Property: Santa Ana College (FLOW #1)
1530 W.17th Street
Santa Ana, CA. 92706

Date & Time of Test: **Date:** 9-2-2016 **Time:** 6:40 AM

Reason for Test: **Bid Information:**
Design Base:
Other: Available Fire Flow / Design Flow

Test Conducted by: Jack Carlile, Orange County Fire Protection
George De La Cruz, Orange County Fire Protection

Test Witnessed by:

Name of Water District: (Private Hydrants on Campus)

Fire District or Fire Department: Orange County Fire Authority

Waterflow Test Information:

Flow Hydr. No.	Test Hydr. No.	Static PSI	Residual PSI	Outlet Size	Outlet Coeff.	Pitot Psi	Observed Flow GPM	Calc. Flow at 20 PSI
A	B	62	54	1 - 2 ½	.90	30	919	
				1 - 2 ½	.90	26	856	
							1,775	4,345

Note: This test was conducted using the private hydrants on the school property. Both outlets were flowed simultaneously (One 4" outlet was reduced to 2.5")

Calculation of Theoretical Flow at 20 psi

Observed flow: 1,775 gpm at 54 psi residual pressure with a 62 psi static pressure

$$Q_2 = Q_1 \frac{(S_1 - R_2)^{.54}}{(S_1 - R_1)^{.54}}$$

$$Q_2 = 1775 \frac{(62 - 20)^{.54}}{(62 - 54)^{.54}}$$

$$Q_2 = 1775 \frac{(42)^{.54}}{(8)^{.54}}$$

$$Q_2 = 1775 \frac{7.526}{3.674}$$

$$Q_2 = 1775 \quad (2.448)$$

$$Q_2 = 4,345 \text{ at 20 psi}$$

Q_2 – Theoretical flow at desired pressure
Q_1 – Flow measured during test
S_1 – Observed static pressure
R_2 – Observed residual pressure during test
R_1 – Residual pressure at 20 psi

UNDERGROUND NOTES:
1. ALL UNDERGROUND WORK SHALL BE BY OTHERS.
2. EXISTING UNDERGROUND IS LOOPED.

FLOW TEST SUMMARY			
STATIC PSI	62	OBSERVED - 10% =	55.8PSI
RESIDUAL PSI	54	OBSERVED - 10% =	48.6PSI
PITOT PSI			30, 26PSI
ORIFICE DIAMETER			2.5
COEFFICIENT OF DISCHARGE			0.9
GPM			1775GPM
DATE			9-2-2016
LOCATION	SANTA ANA COLLEGE		
TEST BY	ORANGE COUNTY FIRE		

10% SAFETY MARGIN USED IN CALCULATIONS.

1 REFERENCE SITE PLAN
1/16" = 1'-0"

hga.
1918 Main Street, Third Floor
Santa Monica, California 90405
Telephone 310.557.7600

STRUCTURAL ENGINEER
SAIFUL BOUQUET
155 N LAKE AVE
PASADENA, CA 91101
626-304-2616

MECHANICAL & PLUMBING ENGINEER
STANTEC CONSULTING INC
14130 RIVERSIDE DR. # 201
SHERMAN OAKS, CA 91423
818-377-8220

ELECTRICAL ENGINEER
FBA ENGINEERING
150 PAULARINO AVE. #A120
COSTA MESA, CA 92626
949-852-9995

CIVIL ENGINEER
KPFF CONSULTING ENGINEERS
700 SOUTH FLOWER ST. #2100
LOS ANGELES, CA 90017
213-418-0201

LANDSCAPE ARCHITECT
LYNN CAPOUYA, INC.
17992 MITCHELL SOUTH, #110
IRVINE, CA 92614
949-756-0150

LABORATORY CONSULTANT
RESEARCH FACILITIES DESIGN
3965 FIFTH AVE. #400
SAN DIEGO, CA 92103
619-297-0159

SCIENCE CENTER
SANTA ANA COLLEGE

RANCHO SANTIAGO COMMUNITY COLLEGE DISTRICT

1530 W. 17TH ST.
SANTA ANA, CA 92706

SANTA ANA COLLEGE

I HEREBY CERTIFY THAT THIS PLAN, SPECIFICATION OR REPORT WAS PREPARED BY ME OR UNDER MY DIRECT SUPERVISION AND THAT I AM A DULY LICENSED PROFESSIONAL ENGINEER UNDER THE LAWS OF THE STATE OF CALIFORNIA.

JAMES G. MATTHIESEN — No. C 46764 — Exp. SEPTEMBER 30, 2017 — STRUCTURAL — STATE OF CALIFORNIA

Professional Engineer — FP 1658 — Exp. 06/30/19 — MECHANICAL — ELECTRICAL — STATE OF CALIFORNIA

NAME: Phaneel Vorajabni
DATE: 07/05/2017
REGISTRATION NUMBER: FP 1658

NO	DESCRIPTION	DATE
2	Addendum 2	9/01/17

ISSUANCE HISTORY - THIS SHEET

DRAWN BY: MCL | REVIEW BY: YOK

HGA NO: 3584-001-00

REFERENCE SITE PLAN

DATE: JULY 06, 2017

FP-100

ADDENDA PACKAGE

© COPYRIGHT HAMMEL, GREEN AND ABRAHAMSON, INC.

MCL 8/29/2017 9:47:47 AM C:\Users\mlee\Documents\SAC-SCI-FP-R16_mlee@researchfacilities.com.rvt

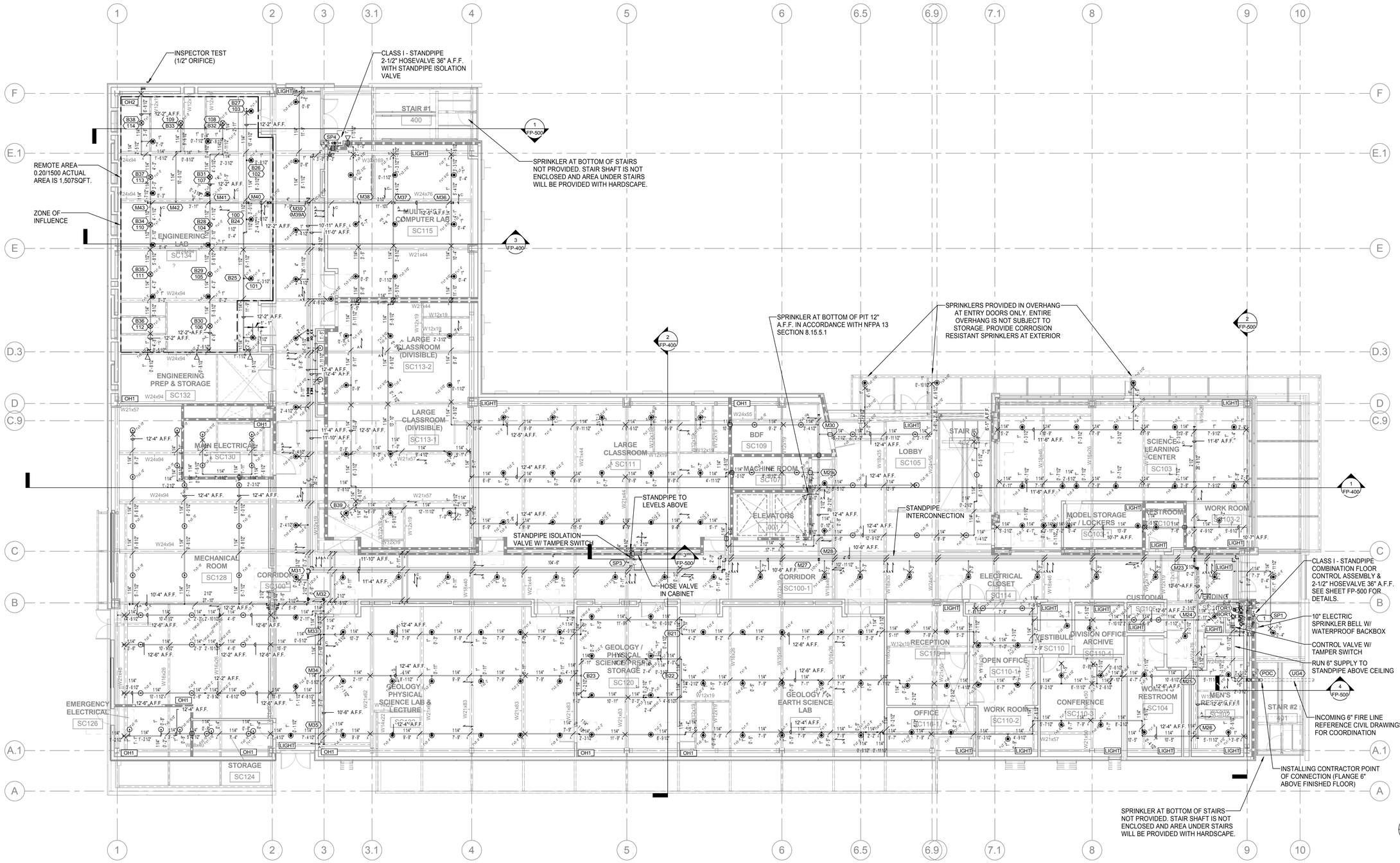

1 FIRE SPRINKLER PIPING PLAN - LEVEL 01

1/8" = 1'-0"

SYMBOL LEGEND

- Q.R. SEMI-RECESSED PENDENT SPRINKLER 5.6K
- Q.R. SEMI-RECESSED PENDENT SPRINKLER 8.0K
- Q.R. HORIZONTAL SIDEWALL SPRINKLER 5.6K
- Q.R. UPRIGHT SPRINKLER 5.6K
- Q.R. UPRIGHT SPRINKLER 8.0K
- HOSE CABINET W/ 2-1/2"x2-1/2" VALVE
- LONGITUDINAL SEISMIC BRACE - SEE SHEET FP-502 FOR DETAILS
- LATERAL SEISMIC BRACE - SEE SHEET FP-502 FOR DETAILS
- RATED WALL PENETRATION
- HYDRAULIC REFERENCE NODE
- HANGER LOCATION - SEE SHEET FP-501 FOR DETAILS
- END OF LINE RESTRAINT LOCATION - SEE SHEET FP-500 FOR DETAILS

FOR SPRINLER LEGEND REFER TO SHEET FP-001

WALL LEGEND

- INTERIOR PARTITION - SEE A660 FOR MORE INFORMATION
- 1-HR FIRE RATED PARTITION
- TYPICAL EXTERIOR WALL

HYDRAULIC DESIGN INFORMATION		
AREA LOCATION	ENGINEERING LAB	
SYSTEM TYPE	NEW WET	
HAZARD	OH2	
NO. OF FLOWING SPRINKLERS	15	
SPRINKLER K-FACTOR	3/4 INCH, 8.0K	
DENSITY	0.20	
AREA OF OPERATION	1507	
HOSE WATER ALLOWANCE		
INSIDE 100	OUTSIDE 150	
SYSTEM DEMAND		
REQUIRED	BASE OF RISER	SOURCE
PRESSURE (PSI)	43.2	52.6
FLOW (GPM)	408	658.1
PSI AVAILABLE		54.7
GPM AVAILABLE		658
SAFETY FACTOR PSI		2.1

SAFETY FACTOR ABOVE IS IN ADDITION TO 10% MARGIN TAKEN FROM FLOW TEST.

ENGINEERING LAB CALCULATION:
THE REMOTE AREA INCLUDES 11 UPRIGHT SPRINKLERS AT THE DECK AND 4 PENDENT SPRINKLER ALONG THE EAST SOFFIT. PENDENTS NEAR THE CENTER OF THE ROOM ARE IN FLOATING CEILING PANELS AND NOT INCLUDED IN THE CALCULATION. THESE PENDENT SPRINKLER ARE NOT REQUIRED TO BE INCLUDED IN THE CALCULATION PER NFPA 13 - 23.4.4.6.3.1. REFER TO SHEET FP-301 FOR CLARIFICATION OF SPRINKLER LAYOUT.

hGA.
1918 Main Street, Third Floor
Santa Monica , California 90405
Telephone 310.557.7600

STRUCTURAL ENGINEER
SAIFUL BOUQUET
155 N LAKE AVE
PASADENA, CA 91101
626-304-2616

MECHANICAL & PLUMBING ENGINEER
STANTEC CONSULTING INC
14130 RIVERSIDE DR. # 201
SHERMAN OAKS, CA 91423
818-377-8220

ELECTRICAL ENGINEER
FBA ENGINEERING
150 PAULARINO AVE. #A120
COSTA MESA, CA 92626
949-852-9995

CIVIL ENGINEER
KPFF CONSULTING ENGINEERS
700 SOUTH FLOWER ST. #2100
LOS ANGELES, CA 90017
213-418-0201

LANDSCAPE ARCHITECT
LYNN CAPOUYA, INC.
17992 MITCHELL SOUTH, #110
IRVINE, CA 92614
949-756-0150

LABORATORY CONSULTANT
RESEARCH FACILITIES DESIGN
3965 FIFTH AVE. #400
SAN DIEGO, CA 92103
619-297-0159

SCIENCE CENTER
SANTA ANA COLLEGE

RANCHO SANTIAGO COMMUNITY COLLEGE DISTRICT

1530 W. 17TH ST.
SANTA ANA, CA 92706

SANTA ANA COLLEGE

I HEREBY CERTIFY THAT THIS PLAN, SPECIFICATION OR REPORT WAS PREPARED BY ME OR UNDER MY DIRECT SUPERVISION AND THAT I AM A DULY REGISTERED PROFESSIONAL ENGINEER UNDER THE LAWS OF THE STATE OF CALIFORNIA

REGISTERED ARCHITECT — PAYAM S. VOINAPOUI — No. 18658 — LICENSED IN THE STATE OF CALIFORNIA

REGISTERED ELECTRICAL ENGINEER — Payam Voinapoui — No. 18658 — 10/28/2019 — STATE OF CALIFORNIA — PROFESSIONAL ENGINEER

NAME: Piyawat Voinapoui
DATE: 07/06/2017
REGISTRATION NUMBER: FP 1658

NO	DESCRIPTION	DATE
1	Addendum 1	8/11/17
2	Addendum 2	9/01/17

ISSUANCE HISTORY - THIS SHEET

DRAWN BY: MCL | REVIEW BY: YOK

HGA NO: 3584-001-00

FIRE SPRINKLER PIPING PLAN - LEVEL 01

DATE: JULY 06, 2017

FP-201

ADDENDA PACKAGE

©COPYRIGHT HAMMEL, GREEN AND ABRAHAMSON, INC.

C:\Users\mcl\Documents\SAC-SC-FP-R16_mcl@hgaarchitects.com.rvt 8/29/2017 9:48:02 AM MCL

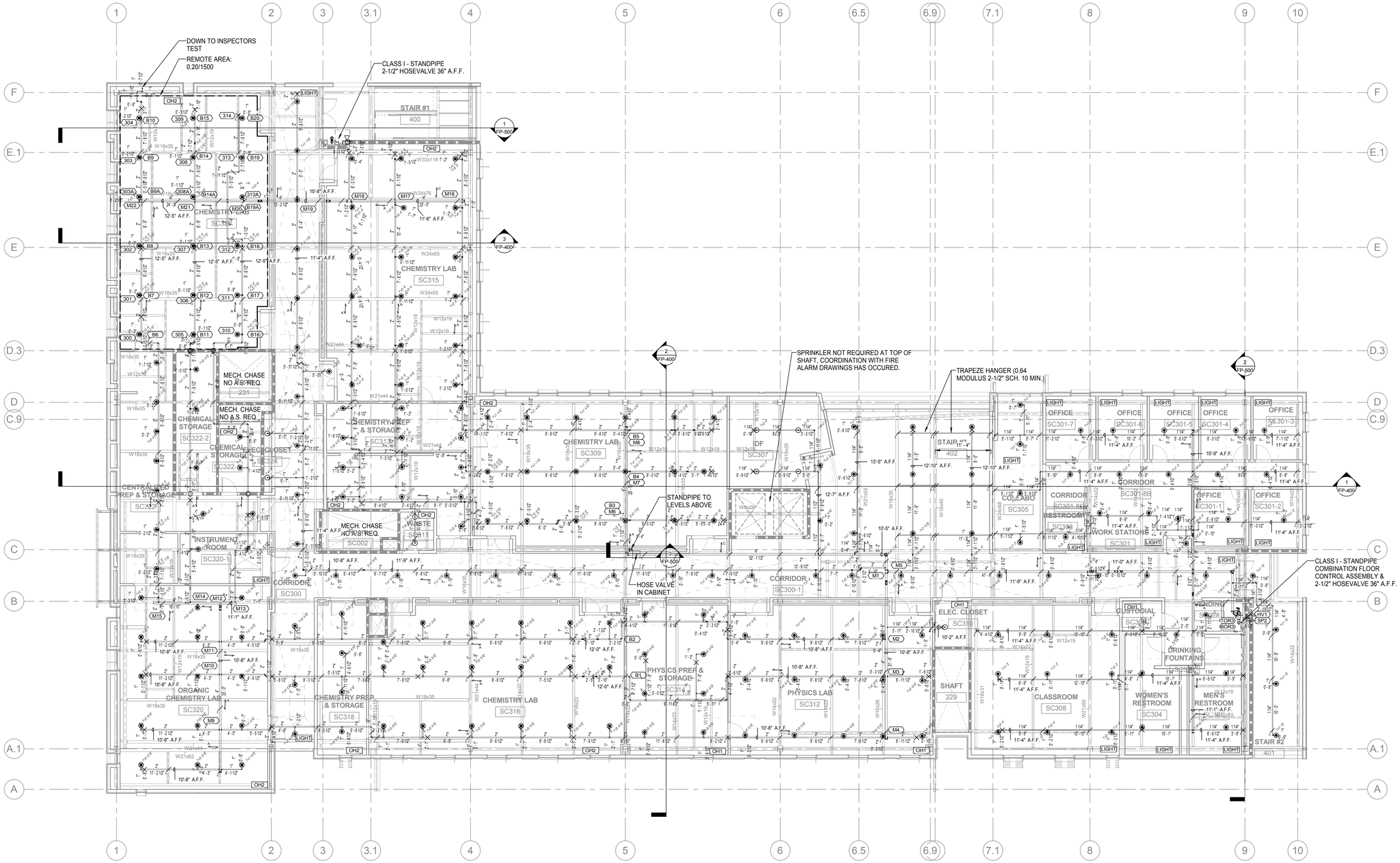

1 FIRE SPRINKLER PIPING PLAN - LEVEL 03

1/8" = 1'-0"

SYMBOL LEGEND

- Q.R. SEMI-RECESSED PENDENT SPRINKLER 5.6K
- Q.R. SEMI-RECESSED PENDENT SPRINKLER 8.0K
- Q.R. HORIZONTAL SIDEWALL SPRINKLER 5.6K
- Q.R. UPRIGHT SPRINKLER 5.6K
- Q.R. UPRIGHT SPRINKLER 8.0K
- HOSE CABINET W/ 2-1/2"x2-1/2" VALVE
- LONGITUDINAL SEISMIC BRACE - SEE SHEET FP-502 FOR DETAILS
- LATERAL SEISMIC BRACE - SEE SHEET FP-502 FOR DETAILS
- RATED WALL PENETRATION
- HYDRAULIC REFERENCE NODE
- HANGER LOCATION - SEE SHEET FP-501 FOR DETAILS
- END OF LINE RESTRAINT LOCATION - SEE SHEET FP-500 FOR DETAILS

FOR SPRINLER LEGEND REFER TO SHEET FP-001

WALL LEGEND

- INTERIOR PARTITION - SEE A660 FOR MORE INFORMATION
- 1-HR FIRE RATED PARTITION
- TYPICAL EXTERIOR WALL

HYDRAULIC DESIGN INFORMATION		
AREA LOCATION	CHEMISTRY LAB	
SYSTEM TYPE	NEW WET	
HAZARD	OH2	
NO. OF FLOWING SPRINKLERS	18	
SPRINKLER K-FACTOR	3/4 INCH, 8.0K	
DENSITY	0.20	
AREA OF OPERATION	1500	
HOSE WATER ALLOWANCE		
INSIDE 100	OUTSIDE 150	
SYSTEM DEMAND		
REQUIRED	BASE OF RISER	SOURCE
PRESSURE (PSI)	31	53.4
FLOW (GPM)	416.4	666.4
PSI AVAILABLE	54.6	
GPM AVAILABLE	666.4	
SAFETY FACTOR PSI	1.2	
SAFETY FACTOR ABOVE IS IN ADDITION TO 10% MARGIN TAKEN FROM FLOW TEST.		

hga.
1918 Main Street, Third Floor
Santa Monica , California 90405
Telephone 310.557.7600

STRUCTURAL ENGINEER
SAIFUL BOUQUET
155 N LAKE AVE
PASADENA, CA 91101
626-304-2616

MECHANICAL & PLUMBING ENGINEER
STANTEC CONSULTING INC
14130 RIVERSIDE DR. # 201
SHERMAN OAKS, CA 91423
818-377-8220

ELECTRICAL ENGINEER
FBA ENGINEERING
150 PAULARINO AVE. #A120
COSTA MESA, CA 92626
949-852-9995

CIVIL ENGINEER
KPFF CONSULTING ENGINEERS
700 SOUTH FLOWER ST. #2100
LOS ANGELES, CA 90017
213-418-0201

LANDSCAPE ARCHITECT
LYNN CAPOUYA, INC.
17992 MITCHELL SOUTH, #110
IRVINE, CA 92614
949-756-0150

LABORATORY CONSULTANT
RESEARCH FACILITIES DESIGN
3965 FIFTH AVE. #400
SAN DIEGO, CA 92103
619-297-0159

SCIENCE CENTER
SANTA ANA COLLEGE
RANCHO SANTIAGO COMMUNITY COLLEGE DISTRICT
1530 W. 17TH ST.
SANTA ANA, CA 92706

SANTA ANA COLLEGE

I HEREBY CERTIFY THAT THIS PLAN, SPECIFICATION OR REPORT WAS PREPARED BY ME OR UNDER MY DIRECT SUPERVISION AND THAT I AM A DULY LICENSED PROFESSIONAL ENGINEER UNDER THE LAWS OF THE STATE OF CALIFORNIA.

LICENSED ARCHITECT JAMES G. MAHAFFEY — EXPIRATION 31-JULY RENEWAL DATE — STATE OF CALIFORNIA

PROFESSIONAL ENGINEER — FP 1658 — Tel 08/26/17 — STATE OF CALIFORNIA

NAME: Pryleal Vinayani
DATE: 07/06/2017
REGISTRATION NUMBER: FP 1658

NO	DESCRIPTION	DATE
2	Addendum 2	9/01/17

ISSUANCE HISTORY - THIS SHEET

DRAWN BY: MCL | REVIEW BY: YOK

HGA NO: 3584-001-00

FIRE SPRINKLER PIPING PLAN - LEVEL 03

DATE: JULY 06, 2017

FP-203

ADDENDA PACKAGE

© COPYRIGHT HAMMEL, GREEN AND ABRAHAMSON, INC.

MCL 8/29/2017 9:48:16 AM C:\Users\mlee\Documents\SAC-SCI-FP-R16_mlee@hgasantamonica.com.rvt