BID ADDENDUM NO. 8

October 22, 2018

Johnson Student Center
Building Demolition, Increment 1 (Demolition) and Increment 2

RANCHO SANTIAGO COMMUNITY COLLEGE DISTRICT
SANTA ANA, CA

DSA App. Nos.
04-116810-1 and 04-116810-2

TO: PROSPECTIVE BIDDERS

This Addendum forms a part of the Contract Documents and modifies the original Bidding Drawings and Specifications. Acknowledge receipt of this Addendum in spaces provided on the Bid Form. Failure to acknowledge may subject Bidder to disqualification.

- **Drawings**

  Architectural:
  - Increment #2: Health Department Review Changes – Approval has been received with minor changes to attached sheets. Clouded and Deltaed no. 8
    i. A8.20 – Revised floor base type at Custodial J105 to CT-1.
    ii. A8.21 – Added base type material, CT-1 Ceramic Tile. Added type of Ceiling Material at ACT-2.
    iii. FS-202 – Revised part no. for Equipment 5-01.
    iv. FS-703 – Revised vertical height of Equipment 2-18.
  - Increment #2: With regards to Addendum 6, PBC 167:
    i. Clarification: NIC and/or NIFSEC equipment is Owner Furnished/Owner Installed (OFOI).
  - Increment #2: With regards to Addendum 6, PBC 103:
    i. Clarification: Refer to wall construction detail, this detail is to reference 17/A9.60 in lieu of 18/A9.60.

  Civil:
  - Building Demolition: Revised sheet C1.00 southwest corner references of removal and protection of existing site furnishings.

  Plumbing/Electrical:
  - Increment 2: Revised single sinks to double sinks with garbage disposals. Refer to attached cutsheets KS-1, KS-2 and revised sheets P0.02, P2.12, P2.22, P3.03, E0.03, E0.11, E2.21.

- **Specifications**
  - Increment #2:
    i. Revised Specification Section 281300 Access Control in its entirety.
    ii. Added: Specification for Training and Demonstration within these Specification section:
    1. 114000, 230549, 235216, 237416, 238126, 260913, 260923, 263323, 274116, 275313 and 283100.

- **Exhibit(s)**
  - Increment #2:
    i. AV – Exhibit B to be used to standardize the pricing and layout of Major Equipment.

- **Pre-Bid Clarification (PBC) Responses**
  - Responses to PBC's, refer to attachments and list of PBC's included - below.

ATTACHMENTS

Drawings full size:
- Increment #2:
  i. A8.20, A8.21, FS-202, FS-703, P0.02, P2.12, P2.22, P3.03, E0.03, E0.11, E2.21.
- Building Demolition:
  - C1.00

Specifications:
- Increment #2:
  - 281300
  - Training and Demonstration excerpts.

Exhibits:
- Exhibit A (14 pages)

Requests for Clarifications:
- PBC 169 thru 211

PBC Log *
* *Should there be a discrepancy between the PBC log and the PBC response, the PBC form shall take precedence.*

8/9/2018 7:09:49 PM C:\Users\AMarjaoui\Documents\RSCCD_SAC_Johnson Center_Central_R16_Azeddine.rvt

ROOM FINISHES

ROOM NO.	ROOM NAME	FLOOR MATERIAL	FLOOR BASE	WALLS NORTH	WALLS EAST	WALLS SOUTH	WALLS WEST	CEILING MATERIAL	CASEWORK CABINET	CASEWORK COUNTER TOP	Comments
ELEV. 1	ELEVATOR 1	MF	-	MF	MF	MF	MF	MF	-	-	SEE SPEC 142100 FOR INTERIOR ELEVATOR CAB FINISHES
ELEV. 2	ELEVATOR 2	MF	-	MF	MF	MF	MF	MF	-	-	SEE SPEC 142100 FOR INTERIOR ELEVATOR CAB FINISHES
J100-1	NORTH LOBBY	RSF-1	RSB-1	GYP-IR	GYP-IR	GYP-IR	GYP-IR / VWG-1	EXP-P / WD-1 / GYP-P	-	-	GYP-IR WITH VANDAL RESISTANT CORNER GUARDS
J100-2	WEST LOBBY	RSF-1	RSB-1	GYP-IR	GYP-IR	GYP-IR	GYP-IR	ACT / GYP	PL-1	QZ-1	GYP-IR WITH VANDAL RESISTANT CORNER GUARDS
J101	THE SPOT	RSF-1	RSB-1	-	GYP-IR	GYP-IR	GYP-IR	EXP-P / ACT / GYP	PL-1	QZ-1 / PL-3	GYP-IR WITH VANDAL RESISTANT CORNER GUARDS
J101-1	CHAIR STORAGE	SC	RSB-1	GYP-P	GYP-P	GYP-P	GYP-P	GYP-P	-	-	
J101-2	CAMPUS STORE	RSF-1 / RSF-4	RSF-1	GYP-P	GYP-P	GYP-P	GYP-P	EXP-P / WD-1 / GYP-P	PL-2	QZ-2	
J102	OFFICE OF STUDENT LIFE	CPT-1	RB	GYP-P	GYP-P	GYP-P	GYP-P	ACT	PL-1	QZ-1	
J102-1	ASSOCIATE DEAN OF STUDENT LIFE	CPT-1	RB	GYP-P	GYP-P	GYP-P	GYP-P	ACT	-	-	
J102-2	OFFICE	CPT-1	RB	GYP-P	GYP-P	GYP-P	GYP-P	ACT	-	-	
J102-3	WORKROOM	CPT-1	RB	GYP-P	GYP-P	GYP-P	GYP-P	ACT	PL-1	PL-3	
J103-2	STUDENT WORK / STORAGE	CPT-1, RSF-2	RB	GYP-IR	GYP-IR	GYP-IR	GYP-IR	ACT	PL-1	PL-3	
J104	CONFERENCE ROOM	CPT-2	RB	GYP-P	GYP-P	GYP-P / TW-2	GYP-P / TW-2	GYP-P / ACT	PL-1	QZ-1	
J105	CUSTODIAL	SC	CT-1	GYP-G / FRP	GYP-G / FRP	GYP-G	GYP-G	GYP-P	-	-	FRP AT MOP SINK 48" HIGH, EXTEND 24" BEYOND SINK EDGE
J106	MEN'S RESTROOM	PT	PB	PT-1	PT-1	PT-1	PT-1 / GYP-G	GYP-P	-	S	SEE ELEV. FOR TILE PATTERN. TP - TOILET PARTITION
J107	WOMEN'S RESTROOM	PT	PB	PT-1	PT-1	PT-1	PT-1 / GYP-G	GYP-P	-	S	SEE ELEV. FOR TILE PATTERN. TP - TOILET PARTITION
J108	D.S.P.S.	CPT-1	RB	GYP-P	GYP-P	GYP-P	GYP-P	ACT	PL	QZ-1 / PL-3	*SEE FINISH FLOOR PLAN A8.10 FOR LOCATION OF COUNTERTOP TYPE (TYP.)
J108-1	OPEN COMPUTER LAB	CPT-1	RB	GYP-P	GYP-P	GYP-P	GYP-P	ACT	-	-	
J108-2	ALT. MEDIA OFFICE	CPT-1	RB	GYP-P	GYP-P	GYP-P	GYP-P	ACT	-	-	
J108-3	OFFICE	CPT-1	RB	GYP-P	GYP-P	GYP-P	GYP-P	ACT	-	-	
J108-4	OFFICE	CPT-1	RB	GYP-P	GYP-P	GYP-P	GYP-P	ACT	-	-	
J108-5	OFFICE	CPT-1	RB	GYP-P	GYP-P	GYP-P	GYP-P	ACT	-	-	
J108-6	OFFICE	CPT-1	RB	GYP-P	GYP-P	GYP-P	GYP-P	ACT	-	-	
J108-7	OFFICE	CPT-1	RB	GYP-P	GYP-P	GYP-P	GYP-P	ACT	-	-	
J108-8	ASSOCIATE DEAN OF D.S.P.S.	CPT-1	RB	GYP-P	GYP-P	GYP-P	GYP-P	ACT	-	-	
J109	CONFERENCE ROOM	CPT-2	RB	GYP-P	GYP-P	GYP-P / TW-2	GYP-P / TW-2	ACT / GYP	PL-1	QZ-1	
J110	HEALTH & WELLNESS CENTER	RSF-2	RSB-2	GYP-P	GYP-P	-	GYP-P	ACT	PL-1	QZ-1 / PL-3	
J110-1	STORAGE	RSF-2	RSB-2	GYP-P	GYP-P	GYP-P	GYP-P	ACT	PL-1	-	
J110-2	LACTATION ROOM	RSF-2	RSB-2	GYP-P	GYP-P	GYP-P	GYP-P	ACT	-	-	
J110-3	OFFICE	CPT-1	RB	GYP-P	GYP-P	GYP-P	GYP-P	ACT	PL-1	PL-3	
J110-4	STUDENT CRISIS OFFICE	CPT-1	RB	GYP-P	GYP-P	GYP-P	GYP-P	ACT	-	-	
J110-5	OFFICE	CPT-1	RB	GYP-P	GYP-P	GYP-P	GYP-P	ACT	-	-	
J110-6	OFFICE	CPT-1	RB	GYP-P	GYP-P	GYP-P	GYP-P	ACT	-	-	
J110-7	OFFICE	CPT-1	RB	GYP-P	GYP-P	GYP-P	GYP-P	ACT	-	-	
J110-8	HEALTH & WELLNESS OFFICE	RSF-2	RSB-2	-	GYP-P	-	GYP-P	ACT	PL-1	QZ-1	
J110-9	EXAM ROOM	RSF-2	RSB-2	GYP-P	GYP-P	GYP-P	GYP-P	ACT	PL-1	PL-3	
J110-10	GENDER NEUTRAL RSTRM.	RSF-2	RSB-2	GYP-G / FRP	GYP-G / FRP	GYP-G / FRP	GYP-G / FRP	ACT	-	-	GYP-6 BEHIND TILE
J110-11	EXAM ROOM	RSF-2	RSB-2	GYP-P	GYP-P	GYP-P	GYP-P	ACT	PL-1	PL-3	
J110-12	SHARED OFFICE	RSF-2	RSB-2	GYP-P	GYP-P	GYP-P	GYP-P	ACT	-	-	
J110-13	SHARED OFFICE	RSF-2	RSB-2	GYP-P	GYP-P	GYP-P	GYP-P	ACT	-	-	
J110-14	FILING	RSF-2	RSB-2	-	GYP-P	GYP-P	GYP-P	ACT	-	-	
J110-15	GENDER NEUTRAL RSTRM.	RSF-2	RSB-2	GYP-G / FRP	GYP-G / FRP	GYP-G / FRP	GYP-G / FRP	GYP-P	-	S	GYP-6 BEHIND TILE
J110-16	TRIAGE ROOM	RSF-2	RSB-2	GYP-P	GYP-P	GYP-P	GYP-P	ACT	PL-1	PL-3	
J110-17	TRIAGE ROOM	RSF-2	RSB-2	GYP-P	GYP-P	GYP-P	GYP-P	ACT	PL-1	PL-3	
J110-18	GENDER NEUTRAL RSTRM.	RSF-2	RSB-2	GYP-G / FRP	GYP-G / FRP	GYP-G / FRP	GYP-G / FRP	GYP-P	-	S	GYP-6 BEHIND TILE
J110-19	BLOOD DRAW STATION	RSF-2	RSB-2	GYP-P	GYP-P	GYP-P	GYP-P	ACT	PL-1	PL-3	
J110-20	SKIN TEST STATION	RSF-2	RSB-2	GYP-P	GYP-P	GYP-P	GYP-P	ACT	PL-1	PL-3	
J111	BDF	SC	RB	GYP-P	GYP-P	GYP-P	GYP-P	EXP-P	-	-	
J112	STAFF LOUNGE	RSF-2	RSB-2	GYP-P	GYP-P	GYP-P	GYP-P	ACT	PL-1	PL-3	
J113	ELEV. CONTROL ROOM	SC	RB	GYP-P	GYP-P	GYP-P	GYP-P	EXP-P	-	-	
J114	GENDER NEUTRAL RSTRM.	PT	PB	PT-1	PT-1	PT-1	PT-1	GYP-P	-	S	GYP-6 BEHIND TILE
J115	GENDER NEUTRAL RSTRM.	PT	PB	PT-1	PT-1	PT-1	PT-1	GYP-P	-	S	GYP-6 BEHIND TILE
J116	GRAB-N-GO	RSF-1	RSB-1	GYP-P	-	-	GYP-P	GYP-P / WD-2	PL-2	QZ-2	
J117	CAMPUS STORE	RSF-1, RSF-2	RSB-1	GYP-P	GYP-P	-	GYP-P	EXP-P / WD-2 / GYP-P	PL-2	QZ-2	
J117-1	STORE OFFICES	CPT-1	RB	GYP-P	GYP-P	GYP-P	GYP-P	ACT	-	-	
J117-1A	CASH OFFICE	CPT-1	RB	GYP-P	GYP-P	GYP-P	GYP-P	ACT	-	-	
J118	CAFE	RSF-1, QT	RSB-1	GYP-P	GYP-P	PT-3	PT-2	GYP-P / WD-2	PL-1	QZ-1	
J118-1	PREP AREA	QT	QB	GYP-G / FRP	GYP-G / FRP	GYP-G / FRP	GYP-G / FRP	ACT -2	-	SS	SEE FOOD SERVICE DRAWINGS
J118-2	DRY STORAGE	QT	QB	GYP-G / FRP	GYP-G / FRP	GYP-G / FRP	GYP-G / FRP	ACT -2	-	SS	SEE FOOD SERVICE DRAWINGS
J119	FACULTY / STAFF RESOURCE CENTER	RSF-2	RSB-2	GYP-P	GYP-P	GYP-P	-	ACT	PL-1	PL-3	
J119-1	MAILROOM	RSF-2	RSB-2	-	-	GYP-P	GYP-P	ACT	PL-1	PL-3	
J120	REPROGRAPHICS	SC	RB	GYP-P	GYP-P	GYP-P	GYP-P	EXP-P	PL-1	PL-3	
J120-1	REPROG. OFFICE	CPT-1	RB	GYP-P	GYP-P	GYP-P	GYP-P	ACT	-	-	
J120-2	GRAPHIC COMM OFFICE	CPT-1	RB	GYP-P	GYP-P	GYP-P	GYP-P	ACT	-	-	
J121	STAFF LOUNGE	RSF-2	RSB-2	GYP-P	GYP-P	GYP-P	GYP-P	ACT	PL-1	PL-3	
J122	CUSTODIAL	SC	RB	GYP-G / FRP	GYP-G-P	GYP-G	GYP-G / FRP	EXP-P	-	-	FRP AT MOP SINK 48" HIGH, EXTEND 12" BEYOND SINK EDGE
J123	GENDER NEUTRAL RSTRM.	PT	PB	PT-1	PT-1	PT-1	PT-1	GYP-P	-	S	
J124	GENDER NEUTRAL RSTRM.	PT	PB	PT-1	PT-1	PT-1	PT-1	GYP-P	-	S	
J125	INVERTER	SC	RB	GYP-P	GYP-P	GYP-P	GYP-P	EXP-P	-	-	
J126	ELECTRICAL	SC	RB	GYP-P	GYP-P	GYP-P	GYP-P	EXP-P	-	-	
J127	FIRE RISER	SC	RB	GYP-P	GYP-P	GYP-P	GYP-P	EXP-P	-	-	
J128	SERVICE CORRIDOR	SC	RB	GYP-IR	GYP-IR	GYP-IR	GYP-IR	EXP-P	-	-	
J129	OVERFLOW STORAGE & RECEIVING	SC	RB	GYP-IR	GYP-IR	GYP-IR	GYP-IR	EXP-P	-	-	
J130	WAREHOUSE	SC	RB	GYP-IR	GYP-IR	GYP-IR	GYP-IR	EXP-P	-	-	
J130-1	WHS. STAFF	CPT-1	RB	GYP-P	GYP-P	GYP-P	GYP-P	ACT	-	-	
J130-2	OFFICE	CPT-1	RB	GYP-P	GYP-P	GYP-P	GYP-P	ACT			

ROOM FINISHES

ROOM NO.	ROOM NAME	FLOOR MATERIAL	FLOOR BASE	WALLS NORTH	WALLS EAST	WALLS SOUTH	WALLS WEST	CEILING MATERIAL	CASEWORK CABINET	CASEWORK COUNTER TOP	Comments
J132	BOILER ROOM	SC	RB	GYP-P	GYP-P	GYP-P	GYP-P	EXP-P			
J133	ELEV. CONTROL ROOM	SC	RB	GYP-P	GYP-P	GYP-P	GYP-P	EXP-P			
J200-1	NORTH LOBBY	RSF-3	RSB-3	GYP-IR	GYP-IR	GYP-IR	GYP-IR / VWG -1	EXP-P / ACT / GYP-P / WD-1	RS	QZ-1	GYP-IR WITH VANDAL RESISTANT CORNER GUARDS
J200-2	WEST LOBBY	RSF-3	RSB-3	GYP-IR	GYP-IR	GYP-IR	GYP-IR	GYP-P / ACT	RS	QZ-1	GYP-IR WITH VANDAL RESISTANT CORNER GUARDS
J200-3	EAST LOBBY	RSF-3	RSB-3	GYP-IR	GYP-IR	GYP-IR	GYP-IR	GYP-P / ACT	RS	QZ-1	GYP-IR WITH VANDAL RESISTANT CORNER GUARDS
J201	FINANCIAL AID	CPT-1	RB	GYP-P	GYP-P	GYP-P	GYP-P	ACT	PL-1 / RS	QZ-1 / PL-3	RECEPTION COUNTER /OFFICE
J201-1	COORDINATOR OFFICE	CPT-1	RB	GYP-P	GYP-P	GYP-P	GYP-P	ACT	-	-	
J201-2	COORDINATOR OFFICE	CPT-1	RB	GYP-P	GYP-P	GYP-P	GYP-P	ACT	-	-	
J201-3	FLEX/MTG. ROOM	CPT-1	RB	GYP-P	GYP-P	GYP-P	GYP-P	ACT	-	-	
J201-4	FLEX/MTG. ROOM	CPT-1	RB	GYP-P	GYP-P	GYP-P	GYP-P	ACT	-	-	
J201-5	ASSOCIATE DEAN OF FINANCIAL AID	CPT-1	RB	GYP-P	GYP-P	GYP-P	GYP-P	ACT	-	-	
J202	STUDENT FINANCIAL SERVICES	CPT-1	RB	GYP-P	GYP-P	GYP-P	-	ACT	PL-1 / RS	QZ-1 / PL-3	RECEPTION COUNTER
J202	RECEPTION	CPT-1	RB	GYP-P	GYP-P	GYP-P	GYP-P	ACT / GYP-P	PL-1 / RS	QZ-1 / PL-3	OPEN OFFICE (BEHIND RECEPTION COUNTER)
J202	WORK AREA	CPT-1	RB	GYP-P	GYP-P	GYP-P	GYP-P	ACT	-	-	
J202-1	CASH COUNTING ROOM	CPT-1	RB	GYP-P	GYP-P	GYP-P	GYP-P	ACT	-	-	
J202-2	OFFICE	CPT-1	RB	GYP-P	GYP-P	GYP-P	GYP-P	ACT	-	-	
J202-3	DIRECTOR'S OFFICE	CPT-1	RB	GYP-P	GYP-P	GYP-P	GYP-P	ACT	-	-	
J203	STUDENT PLACEMENT	CPT-1	RB	GYP-P	GYP-P	GYP-P	GYP-P	ACT	PL-1 / RS	QZ-1 / PL-3	
J203-1	OFFICE	CPT-1	RB	GYP-P	GYP-P	GYP-P	GYP-P	ACT	PL-1	PL-3	
J204	STAFF LOUNGE	RSF-4	RSB-4	GYP-P	GYP-P	GYP-P	GYP-P	ACT	PL-1	PL-3	
J205	MEN'S RESTROOM	PT	PB	PT-1	PT-1	PT-1	PT-1	GYP-P	-	S	TP - TOILET PARTITION
J206	WOMEN'S RESTROOM	PT	PB	PT-3	PT-1	PT-1	PT-1	GYP-P	-	S	TP - TOILET PARTITION
J207	LACTATION ROOM	RSF-2	RSB-2	GYP-P	GYP-P	GYP-P	GYP-P	ACT	PL-1	PL-3	
J208	INTERNATIONAL STUDENT PROGRAM	CPT-1	RB	GYP-P	GYP-P	GYP-P / VWG-1	GYP-P	ACT / GYP-P	PL-1	QZ-1	SEE FINISH FLOOR PLAN A8.11 FOR LOCATION OF VINYL WALL GRAPHIC
J208-1	WORKROOM	CPT-1	RB	GYP-P	GYP-P	GYP-P	GYP-P	ACT	PL-1	PL-3	
J208-2	OFFICE	CPT-1	RB	GYP-P	GYP-P	GYP-P	GYP-P	ACT	-	-	
J208-3	DIRECTOR'S OFFICE	CPT-1	RB	GYP-P	GYP-P	GYP-P	GYP-P	ACT	-	-	
J208-4	LOUNGE	RSF-4	RSB-4	GYP-P	GYP-P	GYP-P	GYP-P	ACT	PL-1	PL	
J209	S.S.S.P. & UPWARD BOUND	CPT-1	RB	GYP-P	GYP-P / TW-2	GYP-P	GYP-P	ACT	-	-	
J209-1	WORKROOM	CPT-1	RB	GYP-P	GYP-P	GYP-P	GYP-P	ACT	-	-	
J209-2	PRIVATE TUTORING	CPT-1	RB	GYP-P	GYP-P	GYP-P	GYP-P	ACT	-	-	
J209-3	PRIVATE TUTORING	CPT-1	RB	GYP-P	GYP-P	GYP-P	GYP-P	ACT	-	-	
J209-4	PRIVATE TUTORING	CPT-1	RB	GYP-P	GYP-P	GYP-P	GYP-P	ACT	-	-	
J209-5	OFFICE	CPT-1	RB	GYP-P	GYP-P	GYP-P	GYP-P	ACT	-	-	
J210	IDF	SC	RB	GYP-P	GYP-P	GYP-P	GYP-P	GYP-P	-	-	
J211	RESOURCE CENTER	CPT-1	RB	GYP-P	GYP-P	GYP-P	GYP-P	ACT	-	-	
J212	E.O.P.S. / CalWORKS	CPT-1	RB	GYP-P	GYP-P	GYP-P	GYP-P	ACT	PL-1 / RS	QZ-1 / PL-3	RECEPTION COUNTER
J212	E.O.P.S. / CalWORKS	CPT-1	RB	GYP-P	GYP-P	GYP-P	GYP-P	ACT / GYP-P	PL-1 / RS	PL-3	OPEN OFFICE
J212-1	WORKROOM	CPT-1	RB	GYP-P	GYP-P	GYP-P	GYP-P	ACT	PL-1	PL	
J212-2	OFFICE	CPT-1	RB	GYP-P	GYP-P	GYP-P	GYP-P	ACT	-	-	
J212-3	OFFICE	CPT-1	RB	GYP-P	GYP-P	GYP-P	GYP-P	ACT	-	-	
J212-4	OFFICE	CPT-1	RB	GYP-P	GYP-P	GYP-P	GYP-P	ACT	-	-	
J212-5	OFFICE	CPT-1	RB	GYP-P	GYP-P	GYP-P	GYP-P	ACT	-	-	
J212-5	OFFICE	CPT-1	RB	GYP-P	GYP-P	GYP-P	GYP-P	ACT			
J212-6	OFFICE	CPT-1	RB	GYP-P	GYP-P	GYP-P	GYP-P	ACT	-	-	
J212-7	OFFICE	CPT-1	RB	GYP-P	GYP-P	GYP-P	GYP-P	ACT	-	-	
J212-8	ASSOCIATE DEAN OF E.O.P.S. / CalWORKS	CPT-1	RB	GYP-P	GYP-P	GYP-P	GYP-P	ACT	-	-	
J212-9	OFFICE	CPT-1	RB	GYP-P	GYP-P	GYP-P	GYP-P	ACT	-	-	
J212-10	OFFICE	CPT-1	RB	GYP-P	GYP-P	GYP-P	GYP-P	ACT	-	-	
J212-11	OFFICE	CPT-1	RB	GYP-P	GYP-P	GYP-P	GYP-P	ACT	-	-	
J213	ELECTRICAL	SC	RB	GYP-P	GYP-P	GYP-P	GYP-P	EXP-P	-	-	
J214	CUSTODIAL STORAGE	SC	RB	GYP-P	GYP-P	GYP-P	GYP-P	EXP-P	-	-	
J215	GUARDIAN SCHOLARS	CPT-1	RB	GYP-P	GYP-P	GYP-P	GYP-P	ACT	-	-	
J215-1	OFFICE	CPT-1	RB	GYP-P	GYP-P	GYP-P	GYP-P	ACT	-	-	
J216	GENDER NEUTRAL RSTRM.	PT	PB	PT-1	PT-1	PT-1	PT-1	GYP-P	-	S	
J217	GENDER NEUTRAL RSTRM.	PT	PB	PT-1	PT-1	PT-1	PT-1	GYP-P	-	S	
J218	VESTIBULE	QT	QB	GYP-P	GYP-P	GYP-P	GYP-P	GYP-P	-	-	
J219-1	CONFERENCE ROOM	CPT-2	RB	GYP-P	S-WP	S-WP	GYP-P	GYP-P / WD-2	PL-1	-	
J219-2	CONFERENCE ROOM	CPT-2	RB	S-WP	S-WP	S-WP	GYP-P	GYP-P / WD-2	PL-1	-	
J219-3	CONFERENCE ROOM	CPT-2	RB	S-WP	S-WP	GYP-P / TW-2	GYP-P	GYP-P / WD-2	PL-1	-	
J219-4	CONFERENCE ROOM	CPT-2	RB	GYP-P	GYP-P / TW-2	GYP-P / TW-2	-	GYP-P / WD-2	PL-1	-	
J219-5	CHAIR STORAGE	SC	RB	GYP-P	GYP-P	GYP-P	GYP-P	ACT	-	-	
J220	BANQUET STAGING ROOM	QT	QB	GYP-G / FRP	GYP-G / FRP	GYP-G / FRP	GYP-G / FRP	ACT -2	-	SS	SEE FOOD SERVICE DRAWINGS
J221	CUSTODIAL / ROOF ACCESS	SC	RB	GYP-P	GYP-G / FRP	GYP-G / FRP	GYP-P	EXP-P	-	-	FRP AT MOP SINK 48" HIGH, EXTEND 24" BEYOND SINK EDGE
J-310	MECHANICAL SCREEN	BUILT UP ROOFING	-	PST-2	PST-2	PST-2	PST-2	OPEN TO SKY			
J-311	MECHANICAL SCREEN	BUILT UP ROOFING	-	PST-2	PST-2	PST-2	PST-2	OPEN TO SKY			
SK101	SERVING KIOSK	SC	RB	CMU-2 / P -1 /FRP	CMU-2 / P-1	CMU-2 / P-1	CMU-2 / GYP-G / FRP	EXP-P			FRP, EXPOSED CMU WALLS TO BE SACKED SMOOTH WITH P-1 PAINT FINISH

GENERAL NOTES

1. REFER TO FINISH MATERIAL SCHEDULE SHEET A8.21 FOR MATERIAL TYPES AND GENERAL NOTES.
2. REFER TO FLOOR FINISH PLAN FOR ACCENT COLOR WALLS.
3. P-1 ON WALLS, U.N.O.

HPI architecture
www.hpiarchitecture.com
115 22nd street
Newport Beach, CA 92663
o: 949. 675. 6442

CONSULTANTS

SEALS / APPROVALS

LICENSED ARCHITECT LAWRENCE ... NO. C 11360 Ren. 6-30-19 STATE OF CALIFORNIA

IDENTIFICATION STAMP
DIV. OF THE STATE ARCHITECT
FILE: 30-C2
A# 04 - 116810
AC PB FLS — SS TJ
DATE AUG 31 2018

PROJECT TITLE
JOHNSON STUDENT CENTER
INCREMENT 2
1530 W 17TH ST SANTA ANA CA 92706

RANCHO SANTIAGO Community College District

SUBMITTALS		
#	DATE	DESCRIPTION
	08/13/2018	DSA FINAL SUBMITTAL
	10/22/18	Addendum no 8

PROJECT IDENTIFICATION Project Number
THESE DRAWINGS ORIGINALLY CREATED IN AUTODESK REVIT V. 2016 U.O.N.
THE ORIGINAL SIZE OF THIS SHEET IS 30" X 42".

DRAWN BY MS, AMF

CHECKED BY LP

THESE DRAWINGS AND SPECIFICATIONS ARE THE PROPERTY AND COPYRIGHT OF THE ARCHITECT AND SHALL NOT BE USED ON ANY OTHER PROJECT OR LOCATIONS EXCEPT AS DESCRIBED ON THE DRAWINGS, WITHOUT WRITTEN AGREEMENT WITH THE ARCHITECT.
© HILL PARTNERSHIP INC. 2017

SHEET TITLE
ROOM FINISH SCHEDULE

SHEET NUMBER
A8.20

DSA SUBMITTAL

C:\Users\AMarjaoui\Documents\RSCCD_SAC_Johnson Center_Central_R16_Azeddine.rvt
8/9/2018 7:09:54 PM

MATERIALS AND COLOR SCHEDULE

MARK	MATERIAL / PRODUCT	MANUFACTURER	MODEL	COLOR	FLAME CLASS	REMARKS
FLOORING						
CPT-1	SHEET CARPET	TANDUS CENTIVA	POWERBOND - CHANGE II	GLAMOROUS GREY	-	CONFERENCE ROOMS
CPT-2	SHEET CARPET	TANDUS CENTIVA	POWERBOND - CANDOR	TERRACOTTA SKY	-	OFFICES
					-	
FG	FLOOR GROUT	MAPEI	-	BAHAMA BEIGE.	-	
PT	PORCELAIN TILE	CROSSVILLE	ARGENT - 6"x6"	CONCRETE JUNGLE	-	RESTROOMS
QT	QUARRY TILE	DALTILE	QUARRY TEXTURES - 6"x6"	ASHEN GREY	-	
RSF-1	RESILIENT SHEET FLOORING	FORBO	MARMOLEUM CONCRETE	CLOUDY SAND	-	
RSF-2	RESILIENT SHEET FLOORING	FORBO	MARMOLEUM CONCRETE	SHRIKE	-	
RSF-3	RESILIENT SHEET FLOORING	FORBO	MARMOLEUM DECIBEL	CLOUDY SAND	-	
RSF-4	RESILIENT SHEET FLOORING	FORBO	MARMOLEUM DECIBEL	SHRIKE	-	
SC	SEALED CONCRETE	ARDEX	-	-	-	
RST	RESILIENT STAIR TREADS & RISERS	FORBO -	MARMOLEUM CONCRETE	CLOUDY SAND	-	
					-	
BASE						
PB	PORCELAIN TILE BASE	CROSSVILLE	ARGENT - COVE BASE - 6"x12"	T.B.D.	-	COVED BASE W/ 3/8" RADIUS
QB	QUARRY COVE BASE	DALTILE	QUARRY TEXTURES - COVE BASE - 5"x6"	ASHEN GREY	-	COVED BASE W/ 3/8" RADIUS
RB	RUBBER BASE	ROPPE	PINNACLE - 6" COVE	CHAMELEON	-	COVED BASE W/ 3/8" RADIUS @ CUSTODIAL
RSB-1	RESILIENT SHEET BASE	FORBO	MARMOLEUM CONCRETE	CLOUDY SAND	-	COVED BASE W/ 3/8" RADIUS @ GRAB'N'GO J116 & CAFE J118
RSB-2	RESILIENT SHEET BASE	FORBO	MARMOLEUM CONCRETE	SHRIKE	-	
RSB-3	RESILIENT SHEET BASE	FORBO	MARMOLEUM DECIBEL	CLOUDY SAND	-	
RSB-4	RESILIENT SHEET BASE	FORBO	MARMOLEUM DECIBEL	SHRIKE	-	
CT-1	CERAMIC TILE BASE	DALTILE	DALTILE S3619TN	DESERT GRAY X714		SLIM TOP FOOT BASE - CUSTODIAL ROOM J105
WALL FINISHES / WALL PANELS						
CMU-1	CONCRETE MASONRY UNIT	ANGELUS BLOCK	PRECISION MEDIUMWEIGHT	SHORELINE		
CS	CONCRETE SACK SMOOTH	-	-	-	-	
CP	CAST-IN-PLACE CONCRETE	-	-	-	-	
PT-1	PORCELAIN TILE	CROSSVILLE	COLOR BLOX - 6"X12" @ BASE 12"x24"	SANDBOX	-	RESTROOMS
PT-2	PORCELAIN TILE	CROSSVILLE	NEST - 6"x36" UPS	SLUMBER OAK	-	CAFE
PT-3	PORCELAIN TILE	CROSSVILLE	RETROACTIVE - 8"x16" UPS	PURE WHITE	-	CAFE
WT - 1	EXTERIOR WALL TILE	CROSSVILLE	COLOR BLOX - 12" X12" UPS	T.B.D.	-	EXTERIOR ELEVATOR TOWER - FIELD TILE
WT - 2	EXTERIOR WALL TILE	IMAGES IN TILE USA, INC	IMAGES IN TILE USA, INC. - 12" X 12"	T.B.D.	-	EXTERIOR ELEVATOR TOWER - GRAPHIC IMAGE APPLIED TILE
WD-1	WOOD GRILLE WALL	ARMSTRONG	WOODWORKS GRILLE - MAPLE SLATS	LIGHT CHERRY	CLASS B	7263 BO GLC WITH 5823 BIOACOUSTIC INFILL AND SOLID MAPLE SLATS AND BACKERS WITH FLAMESTOP II INTUMESCENT COATING (CLASS A).
MP - 1	METAL PANEL	DRI - DESIGN	FACTORY FINISH PAINTED ALUMINUM	SELECT WHITE.	-	SEE EXTERIOR ELEVATIONS -MAIN BUILDING
MP - 2	METAL PANEL	DRI - DESIGN	FACTORY FINISH PAINTED ALUMINUM	T.B.D	-	SEE EXTERIOR ELEVATIONS - MAIN BUILDING
MPC - 1	METAL PANEL - SOLID CORRUGATED	NEW MILLENIUM BUILDING SYSTEMS	CLAD PVDF (KYNAR)	DURANAR COLONIAL WHITE		SEE EXTERIOR ELEVATIONS AND ROOF - WEST PLAZA LUNCH SHELTER
MPC - 2	METAL PANEL - SOLID CORRUGATED	NEW MILLENIUM BUILDING SYSTEMS	CLAD PVDF (KYNAR)	DURANAR SEAWOLF		SEE EXTERIOR ELEVATIONS AND ROOF - WEST PLAZA LUNCH SHELTER
MPC - 3	METAL PANEL - PERFORATED CORRUGATED	NEW MILLENIUM BUILDING SYSTEMS	CLAD PVDF (KYNAR)	DURANAR COLONIAL WHITE		SEE EXTERIOR ELEVATIONS - WEST PLAZA LUNCH SHELTER
MPC - 4	METAL PANEL - PERFORATED CORRUGATED	NEW MILLENIUM BUILDING SYSTEMS	CLAD PVDF (KYNAR)	DURANAR SEAWOLF		SEE EXTERIOR ELEVATIONS - WEST PLAZA LUNCH SHELTER
FRP	FIBERGLASS REINFORCED PLASTIC	MARLITE	SYMMETRIX FRP	C-100-G63 WHITE	-	CUSTODIAL ROOMS, FOOD PREP AREA J118-1 AND BANQUET STAGING ROOM J220
					-	
GYP-P	GYPSUM BOARD-PAINTED	-	-	SEE PAINT COLORS	-	
GYP-G	GREEN BOARD GYPSUM BOARD-PAINTED	-	-	SEE PAINT COLORS	-	RESTROOMS, CUSTODIAL, FOOD PREP AREA J118-1 & BANQUET STAGING ROOM J220
GYP-IR	IMPACT RESISTANT GYP. BOARD- PAINTED	-	-	SEE PAINT COLORS	-	LOBBY AND CONFERENCE ROOMS
PST-1	PLASTER	OMEGA	COLORTEK - SMOOTH COAT	COLOR MATCH-TRAIL DUST	-	SEE EXTERIOR ELEVATIONS, COLOR MATCH TO DUNN EDWARDS - TRAIL DUST
PST-2	PLASTER	OMEGA	COLORTEK - SMOOTH COAT	COLOR MATCH-CARVED WOOD	-	SEE EXTERIOR ELEVATIONS, COLOR MATCH TO DUNN EDWARDS - CARVED WOOD
S-WP	SKYFOLD WALL PANEL	SKYFOLD	CLASSIC NRC	VICTOR DUNE - DRIFT	-	
TP	TOILET PARTITION	SCRANTON	HINY HIDER	T.B.D.	-	RESTROOMS
TW	TACKABLE WALL SURFACE	KOROSEAL	TAC-WALL	PEWTER	-	
TW-2	TACKABLE WALL SURFACE	OWENS CORNING	WALL TECHNOLOGY RESPOND IR-108 1" THICK	KNOLL BEACON - REEF	-	
WG	WALL GROUT	-	-	T.B.D.	-	
WP-1	WALL PANEL	TRESPA	TRESPA METEON	MIX FRENCH WALNUT / HARMONY OAK	- -	SEE EXTERIOR ELEVATIONS
WP-2	WALL PANEL	TRESPA	TRESPA METEON - LUMEN	ITALIAN GREIGE - DIFFUSE		SEE EXTERIOR ELEVATIONS
RS-1	RESIN PANEL	LUMICOR	LUMIFORM	PEPPERDUST OPAQUE	-	MATTE FINISH
RS-2	RESIN PANEL	LUMICOR	LUMIFORM	SILVER SPUN WITH ILLUME	-	MATTE FINISH, AT RECEPTION COUNTERS AND SELF SERVICE COMPUTER STATIONS AT LOBBY
VWG-1	VINLY WALL GRAPHIC	3M				INTERNATIONAL STUDENTS LOBBY - ELECTRONIC FILE TO BE PROVIDED BY ARCHITECT
CEILING MATERIAL						
ACT -1	ACOUSTIC CEILING TILE	ARMSTRONG	2' x 4' OPTIMA SQUARE LAY-IN	-	-	-
ACT -2	ACOUSTIC CEILING TILE	ARMSTRONG	2' x 4' CLEAN ROOM VL 870 SQUARE LAY-IN		-	WASHABLE
ACT -3	ACOUSTIC CEILING TILE	ARMSTRONG	2' x 2' FORMATIONS SQUARES / RECTANGLES WITH OPTIMA SQUARE LAY-IN	-	-	-
ACT-4	ACOUSTIC CEILING TILE	ARMSTRONG	"OPTIMA" SQUARE LAY-IN	-	-	-
MP - 1	METAL PANEL	DRI - DESIGN	FACTORY FINISH PAINTED ALUMINUM	SELECT WHITE	-	SEE REFLECTED CEILING PLAN FOR LOCATIONS
RS	TRANSLUCENT RESIN PANEL	LUMICOR	LUMIFORM	PEPPERDUST OPAQUE	-	LOBBY SOFFITS AT ENTRANCES - SEE INTERIOR ELEVATIONS
WD-1	WOOD GRILLE CEILING	ARMSTRONG	WOODWORKS GRILLE - MAPLE SLATS	LIGHT CHERRY	CLASS B	7263 BO GLC WITH 5823 BIOACOUSTIC INFILL AND SOLID MAPLE SLATS AND BACKERS WITH FLAMESTOP II INTUMESCENT COATING (CLASS A).
WD-2	WOOD PANEL CEILING	ARMSTRONG	WOODWORKS VECTOR	LIGHT CHERRY	CLASS A	6480 W4 NLC WITH 5823 BIOACOUSTIC INFILL
WD-3	WOOD PANEL CEILING	ARMSTRONG	WOODWORKS VECTOR	LIGHT CHERRY	CLASS A	6680 W7 NLC WITH 5479 BIOACOUSTIC INFILL
CASEWORK						
ML	METAL LOCKER	DEBOURGH	CORREGIDOOR P.E. LOCKER	DESERT BEIGE	-	STUDENT WORK/STORAGE J103-2, FOOD PREP J118-1, CASH OFFICE J117-1A
PL-1	PLASTIC LAMINATE	WILSONART	MATTE FINISH	UPTOWN WALNUT	-	CASEWORK IN OFFICES AND CONFERENCE ROOMS
PL-2	PLASTIC LAMINATE	WILSONART	MATTE FINISH	FLORENCE WALNUT	-	CASEWORK IN BOOKSTORE & GRAB N GO
PL-3	PLASTIC LAMINATE	WILSONART	MATTE FINISH	BEIGE PAMPAS	-	COUNTERTOPS IN OFFICES AND WORKROOMS
					-	
					-	
QZ-1	QUARTZ SURFACE	CAMBRIA	-	SNOWDON WHITE	-	COUNTERTOPS AT LOBBIES, RECEPTION DESKS, COFFEE / JUICE BAR
QZ-2	QUARTZ SURFACE	CAMBRIA	-	SNOWDON WHITE		BOOKSTORE & GRAB N GO
S	SOLID SURFACE	FORMICA	FORMICA DESIGNER SERIES	WHITE TRAVERTINE	-	RESTROOMS AND CONFERENCE ROOMS
SS	STAINLESS STEEL				=	SEE FOOD SERVICE DRAWINGS
PAINT						
P-1	PAINT	DUNN EDWARDS	WALLS: SEMI GLOSS FINISH	MODERN IVORY	-	SEE FINISH PLANS A8.10 AND A8.11 FOR WALL LOCATIONS
P-2	PAINT	DUNN EDWARDS	CEILINGS: FLAT FINISH (SEMI GLOSS @ MOP SINK AREA)	STONE SILVER	- -	SEE FINISH PLANS A8.10 AND A8.11 FOR WALL LOCATIONS
P-3	PAINT	DUNN EDWARDS	WAINSCOT UNDER CHAIR RAILS IN LOBBY & CONFERENCE ROOMS:: SATIN FINISH (DE EVEREST)	BOAT ANCHOR	- - -	SEE FINISH PLANS A8.10 AND A8.11 FOR WALL LOCATIONS ALL STRUCTURE AND DUCTWORK AT EXPOSED CEILINGS TO BE PAINTED BOAT ANCHOR (P-3)
WINDOW TREATMENT						
WS-1	WINDOW SHADE - MANUAL	MECHOSHADE SYSTEMS, INC.	THERMOVEIL 1300	GREY	-	SEE ROLLER SHADE WINDOW TREATMENT NOTES ON A8.21
WS-2	WINDOW SHADE - MOTORIZED	MECHOSHADE SYSTEMS, INC.	THERMOVEIL 1300	GREY	-	SEE ROLLER SHADE WINDOW TREATMENT NOTES ON A8.21
WS-3	WINDOW SHADE - MOTORIZED	MECHOSHADE SYSTEMS, INC.	ACOUSTIVEIL 0890	PEARL GREY	-	SEE ROLLER SHADE WINDOW TREATMENT NOTES ON A8.21
MISCELLANEOUS						
CU-1	PRIVACY CURTAIN	CONSTRUCTION SPECIALTIES	CUBICLE CURTAINS	RIVER BIRCH - HAZELNUT	-	LACTATION ROOM J110-3
MU-1	WINDOW FRAME AND MULLION	PPG	-	CHAMPAGNE BRONZE	-	INTERIOR AND EXTERIOR WINDOWS
CR1	CHAIR RAIL	CONSTRUCTION SPECIALTIES	ACROVYN	CHINCHILLA - SUEDE TEXTURE	-	LOBBY AND CONFERENCE ROOM WALLS - SEE INTERIOR ELEVATION FOR LOCATION
TP-1	TOILET PARTITIONS					BASIS OF DESIGN: SCRANTON HINY HIDER COLOR TO BE DETERMINED.
MF	MANUFACTURER FINISHES	-	-	-	-	
EXP-P	EXPOSED STRUCT. PAINTED	-	-	-	-	UNDERSIDE OF EXPOSED STRUCTURE ABOVE - PAINT GRAY IN PUBLIC AREAS - PROVIDE 2" THICK BLACK FACED DUCT LINER BOARD AT THE SPOT, CAMPUS STORE, REPROGRAPHICS

GENERAL NOTES - MATERIALS AND FINISHES

1. REFER TO FLOOR PLANS AND SPECIFICATIONS FOR ADDITIONAL INFORMATION.
2. REFER TO CEILING PLANS FOR ADDITIONAL INFORMATION INCLUDING SOFFIT HEIGHTS.
3. REFER TO INTERIOR ELEVATIONS FOR ADDITIONAL INFORMATION.
4. REFER TO SPECIFICATIONS FOR FINISH LEVEL REQUIRED @ ALL GYPSUM BOARD WALLS
5. ALL INTERIOR FINISHES SHALL COMPLY W/ CBC CHAPTER 8, CFC SECTION 1103.3., TITLE 19 C.C.R.
6. ALL EXPOSED FIRE PROOFING FOR METAL DECK AND BEAMS TO BE PAINTED WITH DUNN EDWARDS DE6378 JET, FLAT.
7. ALL EXPOSED MECHANICAL, AND PLUMBING FIXTURES, AND ASSEMBLIES SHALL BE PAINTED WITH DUNN EDWARDS DE6378 JET, FLAT.
8. ALL EXPOSED STRUCTURAL SUPPORTS AND BRACING IN THE CEILING SPACE TO BE PAINTED DUNN EDWARDS DE6378 JET, FLAT.
7. USE FIELD COLOR - AT ALL WALLS THROUGHOUT UNLESS OTHERWISE NOTED.
8. FOR SPECIFIC FINISH LOCATIONS, SEE FLOOR FINISH PLANS A8.10, AND A8.11.
9. SEE SPECIFICATIONS FOR STAIR FINISH APPLICATION.
10. FIBERGLASS REINFORCED PANELS (FRP) WITH REQUIRED ACCESSORIES, SEE SPEC. SECTION 068313.
11. SEE FLOOR FINISH PLANS A8.10, AND A8.11 FOR ACCENT PAINT WALL LOCATIONS. USE FIELD PAINT COLOR AT ALL WALLS UNLESS OTHERWISE NOTED.

ROLLER SHADE WINDOW TREATMENT:

1. SEE SPECIFICATION SECTION 122413 FOR ROLLER SHADE SPECIFICATIONS AND SEE MATERIALS AND COLOR SCHEDULE FOR COLOR.
2. ALL INTERIOR WINDOWS DO NOT REQUIRE ROLLER SHADES EXCEPT FOR THE INTERIOR WINDOWS IN CONFERENCE ROOMS J104 AND J109 WHICH WILL HAVE MANUALLY OPERATED ROLLER SHADES WS-1.
3. REFER TO MOUNTING DETAILS 4 & 5/A9.51
4. ALL EXTERIOR WINDOWS WILL HAVE MANUALLY OPERATED ROLLER SHADES WS-1 EXCEPT FOR THE FOLLOWING EXCEPTIONS:
   - THE SPOT J101: THE NORTH AND EAST FACING WINDOWS AT WILL NOT HAVE ROLLER SHADES. THE WEST FACING EXTERIOR WINDOW WILL HAVE "MOTOR OPERATED" ROLLER SHADES WS-2
   - CONFERENCE ROOMS J219-1 AND J-219-4: NORTH FACING WINDOWS IN WILL BE "MOTOR OPERATED" WITH DUAL SHADES WS-2 .THE SECOND SHADE WILL HAVE "ACOUSTIVEIL" CLOTH BY MECHOSHADE WS-3

HPI architecture
www.hpiarchitecture.com
115 22nd street
Newport Beach, CA 92663
o: 949. 675. 6442

CONSULTANTS

SEALS / APPROVALS

IDENTIFICATION STAMP
DIV. OF THE STATE ARCHITECT
FILE: 30-C2
A# 04 - 116810
AC PB FLS — SS TY
DATE AUG 3 1 2018

PROJECT TITLE
JOHNSON STUDENT CENTER
INCREMENT 2
1530 W 17TH ST SANTA ANA CA 92706

RANCHO SANTIAGO
Community College District

SUBMITTALS		
#	DATE	DESCRIPTION
	08/13/2018	DSA FINAL SUBMITTAL
	10/22/18	Addendum no 8

PROJECT IDENTIFICATION Project Number
THESE DRAWINGS ORIGINALLY CREATED IN AUTODESK REVIT V. 2016 U.O.N.
THE ORIGINAL SIZE OF THIS SHEET IS 30" X 42".

DRAWN BY MS, AMF

CHECKED BY LP

THESE DRAWINGS AND SPECIFICATIONS ARE THE PROPERTY AND COPYRIGHT OF THE ARCHITECT AND SHALL NOT BE USED ON ANY OTHER PROJECT OR LOCATIONS EXCEPT AS DESCRIBED ON THE DRAWINGS, WITHOUT WRITTEN AGREEMENT WITH THE ARCHITECT.
© HILL PARTNERSHIP INC. 2017

SHEET TITLE
MATERIALS & COLOR SCHEDULE

SHEET NUMBER
A8.21

DSA SUBMITTAL

8/8/2018 12:57:26 PM C:\Users\pateryj\Documents\Foodservice SJC- R16_soul@webbfsd.com.rvt

EQUIPMENT SCHEDULE

ITEM #	QTY	DESCRIPTION	MANUFACTURER	MODEL #	WEIGHT	PLUMBING							ELECTRICAL							GENERAL REMARKS
						CW	HW	DW	IW	GAS	MBTU / HR	PLUMBING REMARKS	VOLTS	K.W.	AMPS	H.P.	PHASE	ELEC. CONN.	ELECTRICAL REMARKS	
4-01	1	AIR CURTAIN, RECEIVING	MARS	NH242-1UA-TS	120 LBS								120		9.0		1	D	WIRE THRU DOOR ACTIVATED MICRO-SWITCH	
4-02	1	HAND SINK W/ SOAP AND TOWEL DISPENSERS	IMC TEDDY	ADA-WSX	45 LBS			1 1/2"												
4-03	1	HAND SINK FAUCET, 4" CTR, DECK MOUNT	T&S	B-0325-CR		1/2"	1/2"													
4-04	1	2 DOOR REACH-IN REFRIG. (SELF-CONTAINED)	VICTORY	RS-2D-S1	483 LBS								120		10.7		1	C	NEMA 5-15P	
4-05	1	JANITOR'S MOP SINK (FLOOR MOUNTED)	ADVANCE/TABCO	9-OP-28	3S			3"				'P-TRAP' BELOW SLAB								
4-06	1	JANITOR'S SINK FAUCET W/ VACUUM BREAKER	T&S	B-0655-01		1/2"	1/2"													
4-07	1	JANITOR'S MOP RACK	ADVANCE TABCO	K-242																
4-08	1	WALL CAPS	CUSTOM	S/S																
4-09	1	SPARE #																		
4-10	2	CORNER GUARD	CUSTOM	S/S																
4-11	1	WALL SHELF (KNIFE BRACKETS)	CUSTOM	S/S	50 LBS															
4-12	4	MOBILE CART	NIFSEC	BY OWNER									120		15.0		1	C		
4-13	4	BUMPER RAIL	CUSTOM	S/S																
4-14	1	WORK TABLE W/ GLASS FILL STATION	CUSTOM	S/S	990 LBS				FS				120		6.0		1	C	(3 LOCATIONS) REQUIREMENTS PER LOCATION	
4-15	1	UNDERCOUNTER CABINET	CUSTOM	S/S																
4-16	1	COFFEE BREWER	FETCO	CBS-62H		3/4"						*INTERCONNECT W/ WATER FILTRATION SYSTEM	120		32.9		1	D		
4-17	1	PRE-RINSE ASSEMBLY FAUCET	T&S	B-0133-LB		1/2"	1/2"													
4-18	1	WALL SHELF (KNIFE BRACKETS)	CUSTOM	S/S	150 LBS															
4-19	1	WALL SHELF (KNIFE BRACKETS)	CUSTOM	S/S	40 LBS															
4-20	1	SPARE #																		
4-21	1	DROP-IN, ICE STATION	DELFIELD	305	65 LBS				F.S.											
4-22	1	ICE STORAGE BIN	SCOTSMAN	B530S	552 LBS				FS			DRAIN TO FLOOR SINK								
4-23	1	ICE MAKER (SELF-CONTAINED)	SCOTSMAN	C0830MA-32	235 LBS	*			F.S.			* INTERCONNECT C.W. WITH FILTRATION UNIT ITEM #4-24	208-230		10.2		1	D		
4-24	1	WATER FILTRATION SYSTEM	SCOTSMAN	SSM2-P	11 LBS	1/2"						INTERCONNECT C.W. WITH ICE MAKER								
4-25	1	FLOOR TROUGH	CUSTOM	S/S				3"				'P-TRAP' BELOW SLAB								
4-26	1	WORK TABLE W/ PREP SINK	CUSTOM	S/S	585 LBS				FS				120		6.0		1	C		
4-27	1	SPLASH MOUNTED PREP SINK FAUCET	T&S	B-0231-CR		1/2"	1/2"													
4-28	1	SPARE #																		
4-29	1	SPARE #																		
4-30	1	SPARE #																		
4-31	1	WALL SHELF (KNIFE BRACKETS)	CUSTOM	S/S	130 LBS															
4-32	1	3 COMPARTMENT SINK	CUSTOM	S/S	825 LBS			2"	FS			DRAIN PER LOCAL CODE REQUIREMENTS								
4-33	1	WALL SHELF (KNIFE BRACKETS)	CUSTOM	S/S	40 LBS															
4-34	1	UTENSIL RACK	CUSTOM	S/S	90 LBS															
4-35	2	SPLASH MOUNTED HI-FLO UTENSIL SINK FAUCETS	T&S	B-0291		3/4"	3/4"					REQUIREMENTS PER UNIT								
4-36	1	WALL SHELF (KNIFE BRACKETS)	CUSTOM	S/S	40 LBS															
4-37	1	MOBILE SHELVING UNIT	CAMBRO	CAMSHELVING																
4-38	1	MOBILE WORK TABLE	CUSTOM	S/S	480 LBS								120		6.0		1	C	(2 LOCATIONS) REQUIREMENTS PER LOCATION	
5-01	2	HOT/COLD TRANSPORT CART (CAMBRO MODEL ~~RSW1624S~~ UPCH1600)	NIFSEC	BY OTHERS	276 LBS								120		15.0		1	C	NEMA 5-20P / 20 AMP SERVICE REQUIRED	
5-02	1	MOBILE REFRIGERATED CABINET (TRAY SHELF (GA SYSTEMS MODEL C37/TS12)	NIFSEC	BY OTHERS	200 LBS								120		15.0		1	C	NEMA 5-15P	
5-03	1	MOBILE REFRIGERATED CABINET (GA SYSTEMS MODEL C5)	NIFSEC	BY OTHERS	350 LBS								120		15.0		1	C	NEMA 5-15P	
5-04	1	HEATED CABINET (GA SYSTEMS MODEL H5)	NIFSEC	BY OTHERS	350 LBS								120		30.0		1	C	NEMA 5-30P	
5-05	1	MOBILE CASHIER STATION (GA SYSTEMS MODEL D3-MOD)	NIFSEC	BY OTHERS																
5-06	1	CASH REGISTER	NIFSEC	BY OTHERS									120		6.0		1	C	DATA LINE REQUIRED. VERIFY REQUIREMENTS W/ SUPPLIER.	
5-07	1	HAND SINK W/ SOAP AND TOWEL DISPENSERS	IMC TEDDY	ADA-WSX	45 LBS			1 1/2"												
5-08	1	HAND SINK FAUCET, 4" CTR, DECK MOUNT	T&S	B-0325-CR		1/2"	1/2"													
5-09	4	STORAGE SHELVING	CAMBRO	CAMSHELVING																
5-10	1	LID HOLDER (GA SYSTEMMS MODEL LC30)	NIFSEC	BY OTHERS																
5-11	2	POWER BOLLARD	NIFSEC	SEE ARCHITECT SECTION																

architecture
www.hpiarchitecture.com
115 22nd street
Newport Beach, CA 92663
o: 949. 675. 6442

CONSULTANTS
webb.
1530 S. Lewis St. Anaheim, CA 92805
P 714.508.1880 www.webbfsd.com

SEALS / APPROVALS

IDENTIFICATION STAMP
DIV. OF THE STATE ARCHITECT
FILE: 30-C2
A# 04 - 116810
AC PB FLS EF SS TY
DATE AUG 31 2018

PROJECT TITLE
JOHNSON STUDENT CENTER
INCREMENT 2
1530 W 17TH ST SANTA ANA CA 92706

RANCHO SANTIAGO
Community College District

SUBMITTALS

#	DATE	DESCRIPTION
	05/18/2018	HEALTH DEPT. SUBMITTAL
	08/13/2018	DSA FINAL SUBMITTAL
	10/22/18	Addendum no 8

PROJECT IDENTIFICATION Project Number

THESE DRAWINGS ORIGINALLY CREATED IN AUTODESK REVIT V. 2016 U.O.N.

THE ORIGINAL SIZE OF THIS SHEET IS 30" X 42".

DRAWN BY MB

CHECKED BY SE/VG

THESE DRAWINGS AND SPECIFICATIONS ARE THE PROPERTY AND COPYRIGHT OF THE ARCHITECT AND SHALL NOT BE USED ON ANY OTHER PROJECT OR LOCATIONS EXCEPT AS DESCRIBED ON THE DRAWINGS, WITHOUT WRITTEN AGREEMENT WITH THE ARCHITECT.

© HILL PARTNERSHIP INC. 2016

SHEET TITLE
EQUIPMENT SCHEDULE

SHEET NUMBER
FS-202

DSA SUBMITTAL

8/8/2018 12:57:44 PM C:\Users\jsetiep\Documents\FoodService SJC_R16_sou@webbfsd.com.rvt

NOTE: SEE ARCH DRAWINGS FOR FINISH SPECS

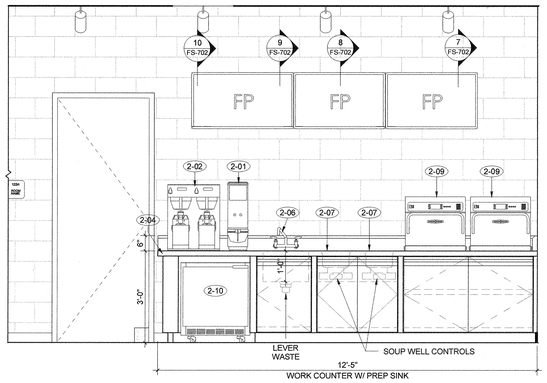

4 ELEVATION @ WORK COUNTER
1/2" = 1'-0"

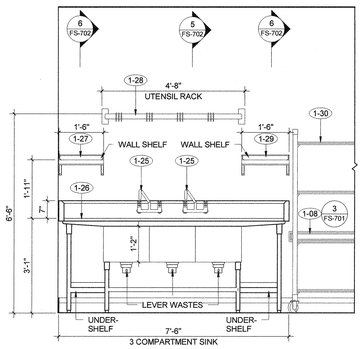

3 ELEVATION @ 3 COMPARTMENT SINK
1/2" = 1'-0"

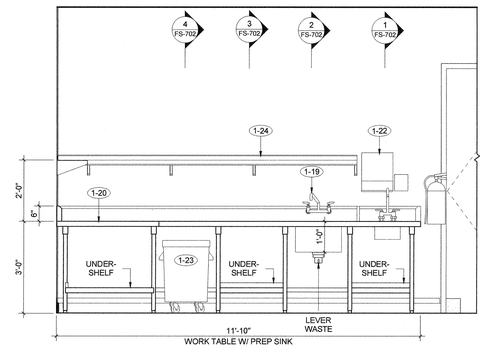

2 ELEVATION @ WORK TABLE W/ PREP SINK
1/2" = 1'-0"

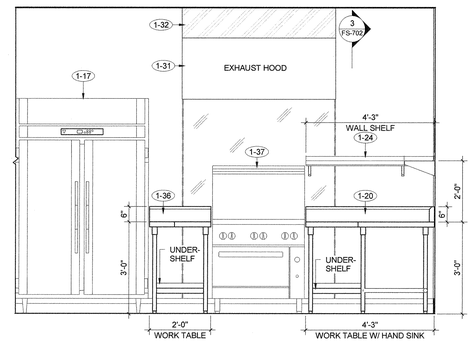

1 ELEVATION @ WORK TABLE W/ HAND SINK
1/2" = 1'-0"

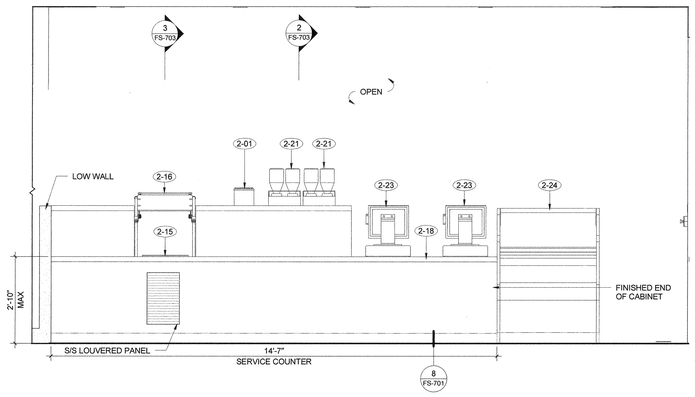

7 ELEVATION @ SERVICE COUNTER
1/2" = 1'-0"

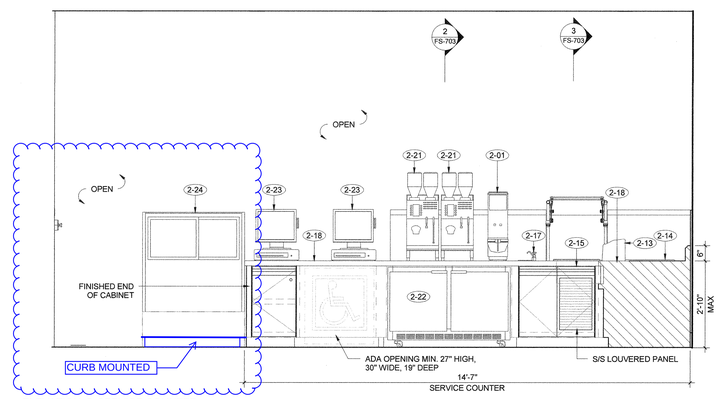

6 ELEVATION @ SERVICE COUNTER
1/2" = 1'-0"

WAS PREVIOUSLY SHOWN ON CASTERS

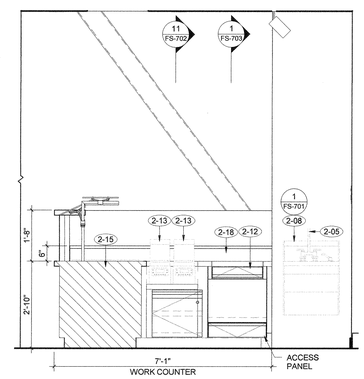

ELEVATION @ WORK COUNTER W/ BLENDERS
5 1/2" = 1'-0"

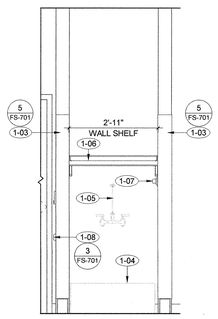

11 ELEVATION @ MOP SINK
1/2" = 1'-0"

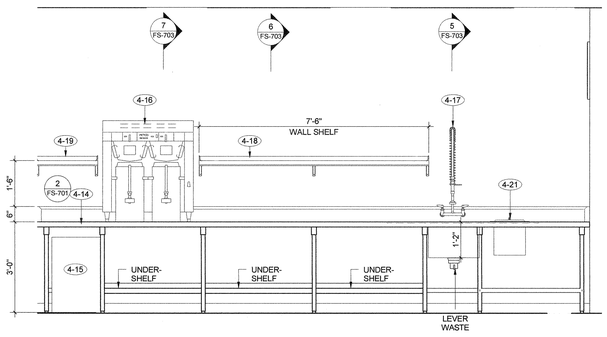

10 ELEVATION @ BEVERAGE TABLE
1/2" = 1'-0"

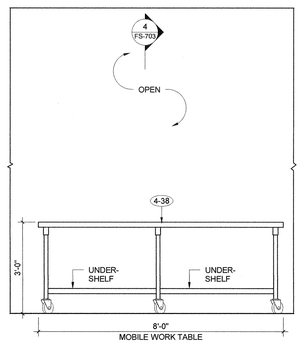

9 ELEVATION @ MOBILE WORK TABLE
1/2" = 1'-0"

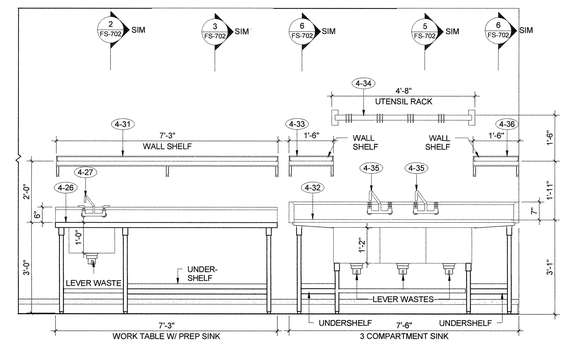

ELEVATION @ 3 COMPARTMENT SINK & WORK TABLE
8 1/2" = 1'-0"

HPI architecture
www.hpiarchitecture.com
115 22nd street
Newport Beach, CA 92663
o: 949. 675. 6442

CONSULTANTS

webb
1530 S. Lewis St. Anaheim, CA 92805
P 714.508.1880 www.webbfsd.com

SEALS / APPROVALS

IDENTIFICATION STAMP
DIV. OF THE STATE ARCHITECT
FILE: 30-C2
A# 04 - 116810
AC PB FLS — SS TY
DATE AUG 31 2018

PROJECT TITLE

JOHNSON STUDENT CENTER
INCREMENT 2
1530 W 17TH ST SANTA ANA CA 92706

RANCHO SANTIAGO Community College District

SUBMITTALS		
#	DATE	DESCRIPTION
	05/18/2018	HEALTH DEPT. SUBMITTAL
	08/13/2018	DSA FINAL SUBMITTAL
	10/22/18	Addendum no 8

PROJECT IDENTIFICATION Project Number

THESE DRAWINGS ORIGINALLY CREATED IN AUTODESK REVIT V. 2016 U.O.N.

THE ORIGINAL SIZE OF THIS SHEET IS 30" X 42".

DRAWN BY MB

CHECKED BY SE/VG

THESE DRAWINGS AND SPECIFICATIONS ARE THE PROPERTY AND COPYRIGHT OF THE ARCHITECT AND SHALL NOT BE USED ON ANY OTHER PROJECT OR LOCATIONS EXCEPT AS DESCRIBED ON THE DRAWINGS, WITHOUT WRITTEN AGREEMENT WITH THE ARCHITECT.

© HILL PARTNERSHIP INC. 2016

SHEET TITLE

EQUIPMENT ELEVATIONS

SHEET NUMBER

FS-601

DSA SUBMITTAL

8/8/2018 12:57:46 PM C:\Users\jsellers\Documents\Foodservice SJC-R16_sjsu@webbfsd.com.rvt

NOTE: SEE ARCH DRAWINGS FOR FINISH SPECS
SEE STRUCTURAL DRAWINGS FOR ACHORAGE DETAILS

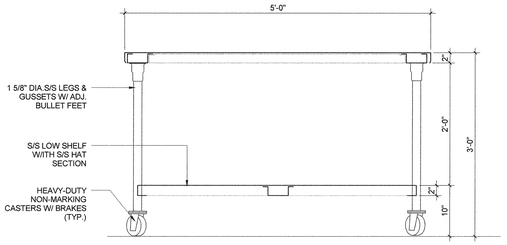

4 SECTION @ ITEM #4-38, MOBILE WORK TABLE
1" = 1'-0"

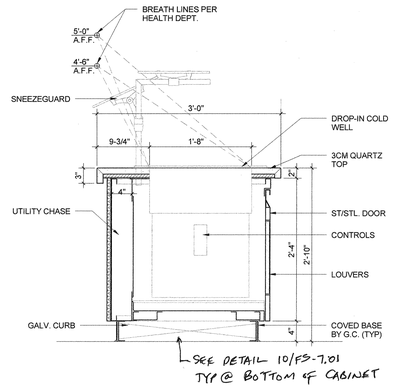

3 SECTION @ ITEM #2-18, SERVICE COUNTER
1" = 1'-0"

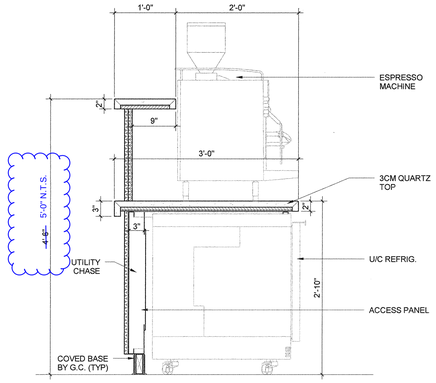

2 SECTION @ ITEM #2-18, SERVICE COUNTER
1" = 1'-0"

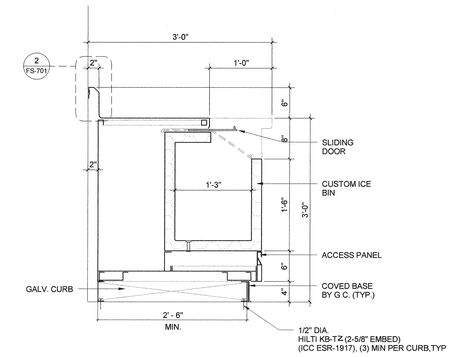

1 SECTION @ ITEM #2-18, INTEGRAL ICE BIN
1" = 1'-0"

7 SECTION @ ITEM #4-14, WORK TABLE
1" = 1'-0"

6 SECTION @ ITEM #4-14, WORK TABLE
1" = 1'-0"

5 SECTION @ ITEM #4-14, GLASS FILL STATION
1" = 1'-0"

HPI architecture
www.hpiarchitecture.com
115 22nd street
Newport Beach, CA 92663
o: 949. 675. 6442

CONSULTANTS

webb.
1530 S. Lewis St. Anaheim, CA 92805
P 714.508.1880 www.webbfsd.com

SEALS / APPROVALS

IDENTIFICATION STAMP
DIV. OF THE STATE ARCHITECT
FILE: 30-C2
A# 04 - 116810 Ty
AC PB FLS — SS
DATE AUG 3 1 2018

PROJECT TITLE
JOHNSON STUDENT CENTER
INCREMENT 2
1530 W 17TH ST SANTA ANA, CA 92706

RANCHO SANTIAGO Community College District

SUBMITTALS

#	DATE	DESCRIPTION
	05/18/2018	HEALTH DEPT. SUBMITTAL
	08/13/2018	DSA FINAL SUBMITTAL
	10/22/18	Addendum no 8

PROJECT IDENTIFICATION Project Number

THESE DRAWINGS ORIGINALLY CREATED IN AUTODESK REVIT V. 2016 U.O.N.

THE ORIGINAL SIZE OF THIS SHEET IS 30" X 42"

DRAWN BY MB

CHECKED BY SE/VG

THESE DRAWINGS AND SPECIFICATIONS ARE THE PROPERTY AND COPYRIGHT OF THE ARCHITECT AND SHALL NOT BE USED ON ANY OTHER PROJECT OR LOCATIONS EXCEPT AS DESCRIBED ON THE DRAWINGS, WITHOUT WRITTEN AGREEMENT WITH THE ARCHITECT

© HILL PARTNERSHIP INC. 2016

SHEET TITLE
EQUIPMENT SECTIONS

SHEET NUMBER
FS-703

DSA SUBMITTAL

EARTHWORK NOTES TO CONTRACTOR:

1. IT IS THE CONTRACTOR'S RESPONSIBILITY TO REVIEW THE PLANS THOROUGHLY PRIOR TO MOBILIZATIONS. IT IS ALSO THE GRADING CONTRACTOR'S RESPONSIBILITY TO NOTIFY THE CIVIL OF RECORD IF ONSITE DISCREPANCIES ARE OBSERVED THAT WOULD AFFECT THE EARTHWORK.
2. THE EXISTING TOPOGRAPHY SHALL BE UTILIZED AS THE BASIS FOR ALL EARTHWORK COMPUTATIONS. SAID TOPOGRAPHY SHALL BE PRESUMED TO BE ACCEPTABLE TO ALL INTERESTED PARTIES UNLESS A DEVIATION IS FOUND PRIOR TO THE START OF GRADING IN ANY SPECIFIC AREAS, ANY DEVIATION SO DETERMINED SHALL BE PROMPTLY TRANSMITTED TO ALL INTERESTED PARTIES.
3. THE CONTRACTOR IS REQUIRED TO ESTIMATE THE QUANTITIES OF GRADING WORK TO BE DONE AND INCLUDE ALL COSTS THEREFROM WITHIN HIS BID, AND NO ADDITIONAL ALLOWANCE WILL BE MADE WITHOUT PRIOR CONSENT FROM THE OWNER.
4. OFF-SITE DISPOSAL OF EXCAVATION MATERIAL IS THE RESPONSIBILITY OF THE CONTRACTOR AND SHALL BE INCLUDED IN HIS BID. THE CONTRACTOR SHALL HOLD THE OWNER AND ENGINEER HARMLESS AS A RESULT OF ANY CLAIMS ARISING FROM THE ACTIONS ENROUTE OR AWAY FROM THE SITE.
5. ANY EXPORT OR IMPORT REQUIRED TO BALANCE THE SITE SHALL BE THE SOLE RESPONSIBILITY OF THE CONTRACTOR.

PROTECTION NOTES

△1	36	PROTECT IN PLACE EXISTING STORM DRAIN
	37	PROTECT IN PLACE EXISTING SEAT WALLS AND ASSOCIATED LANDSCAPING AND HARDSCAPING
	38	PROTECT EXISTING MONUMENT
	39	PROTECT EXISTING TREE
△2	40	PROTECT EXISTING BOLLARD
	41	PROTECT EXISTING COLUMN BANNER
	42	PROTECT EXISTING SIGN

DEMOLITION NOTES

	1*	EXISTING BUILDING TO BE DEMOLISHED (REMOVED) IN ITS ENTIRETY. REMOVE/DEMO EXISTING SLAB ON GRADE (SOG) IN ITS ENTIRETY CUT/CLEAR STEEL REINFORCEMENT T TOP OF EXISTING CAPS/GRADE BEAMS TO REMAIN. PROVIDE ENGINEERED FILL AS REQUIRED. REFER TO CIVIL, PLUMBING AND ELECTRICAL DRAWINGS FOR ADDITIONAL INFORMATION. SEPARATE DEMOLISHED MATERIAL PER LEED GREEN BUILDING RATING SYSTEM WASTE MANAGEMENT.
	2	REMOVE EXISTING STORM DRAIN INLET
	3	REMOVE EXISTING CONRETE CULVERT/STORM DRAIN LINE AND CAP AT BOUNDARY LINE
	4	REMOVE EXISTING SEAT WALLS IN THEIR ENTIRETY INCLUDING FOOTINGS, WITHIN THE DEMOLITION BOUNDARY
	5	REMOVE EXISTING STAIRS IN THEIR ENTIRETY, INCLUDING ALL FOOTINGS
	6	REMOVE EXISTING SITE LIGHT AND BASE IN ENTIRETY, REFER TO AS BUILT PLANS FOR FULL DESCRIPTION OF LIGHTING FIXTURES AND BASES
	7	REMOVE ALL EXISTING PAVING AND ASSOCIATED REBAR/CONCRETE WITHIN DEMOLITION BOUNDARY
	8	REMOVE ALL EXISTING TREES AND LANDSCAPING WITHIN THE DEMOLITION BOUNDARY, INCLUDING ALL ROOTS, ROOT BALLS 3' BEYOND TREE CANOPY.
	9	REMOVE ALL EXISTING BOLLARDS WITHIN DEMOLITION BOUNDARY
	10	REMOVE EXISTING MANHOLE
	11	REMOVE ALL EXISTING C.L. FENCING WITHIN DEMOLITION BOUNDARY
	12	REMOVE EXISTING ELECTRICAL EQUIPMENT
	13	REMOVE/DEMO EXISTING SHED IN ITS ENTIRETY INCLUDING FOOTINGS, GRADE BEAMS, AND CAPS AS NOTED ON ARCHITECTURAL PLANS. LEVEL AND COMPACT BUILDING REMOVAL AREA.
	14	REMOVE ALL ELEVATORS IN THEIR ENTIRETY INCLUDING ELEVATOR PITS AND THEIR FOOTINGS
△1	15	REMOVE EXISTING SEWER.
	16	REMOVE EXISTING WATER
	17	REMOVE EXISTING FIRE HYDRANT
△2	18	REMOVE AND REINSTALL EXISTING BOLLARD

hpi architecture

www.hpiarchitecture.com

architecture | planning | interiors

115 twenty second street, newport beach
california 92663 phone: 949.675.6442

CONSULTANTS

Hall & Foreman
A Division of David Evans and Associates, Inc.
17782 17TH STREET, SUITE 200 • TUSTIN, CA 92780 • 714-665-4500

LICENSED ARCHITECT LAWRENCE A. FRAPWELL NO. C 11360 Ren. 6-30-17 STATE OF CALIFORNIA

SEALS / APPROVALS

REGISTERED PROFESSIONAL ENGINEER JOHN CURT HOGAN No.26229 Exp.3/31/16 CIVIL STATE OF CALIFORNIA

IDENTIFICATION STAMP

AERIAL SURVEY LEGEND

CONC	CONCRETE
ASPH	ASPHALT
	TREE
	BUSH
	PALM TREE
U/O	UNIDENTIFIED OBJECT
	LIGHT STANDARD
TS	TRAFFIC SIGNAL
	STREET LIGHT
	SIGN (10')
	SIGN (5')
LS	LARGE SIGN POST
CB	CATCH BASIN
DI	DROP INLET
LP	LIGHT POLE
M	PARKING METER
DI	DROP INLET
RRS	R.R. SIGNAL
S	SIGN
F/H	FIRE HYDRANT
	POWER POLE
	TRANSFORMER BOX
	GUYWIRE/ANCHOR
M	METER
	POST (NO LABEL)
V	VALVE
MH	MANHOLE
	HANDICAP
UB	UTILITY BOX
SP	STAND PIPE
	FENCE
	RETAIN WALL/FENCE
	RETAINING WALL
	TREE LINE-DRIP LINE
	BRUSH LINE
×24.0	SPOT GRADE
	STORM DOOR MANHOLE
WV	WATER VALVE
	SEWER MANHOLE
	SIGN
	UTILITY POLE
	GUY ANCHOR
MH	MANHOLE
	SEWER CLEANOUT
E	ELECTRIC PULL BOX
CT	CATV PULL BOX
M	WATER METER BOX

ABBREVIATIONS

ASPH	ASPHALT SURFACE
ATM	BANKING MACHINE
BRK	BRICK SURFACE
BWL	BRICK WALL
CD	CURB DOOR
COL	COLUMN/PILLAR
CONC	CONCRETE SURFACE
DC	DETECTOR CHECK
DNE	DO NOT ENTER
ECB	ELECT. CONTROL BOX
EG	EDGE OF GUTTER
ELM	EL. METER
EOC	EDGE OF CONCRETE
EVT	ELECT. VAULT
FDC	FIRE DETECTOR CHECK
FL	FLOW LINE
FF	FINISHED FLOOR
FR	FIRE RISER
FS	FINISHED SURFACE
GWC	GWC SIGNAGE
ICV	IRR. CONTROL VALVE
LKD	LOCKED (NO ACCESS)
MKR	MARKER
MOW	MOW STRIP
MTR	METER
NG	NATURAL GROUND
PG	PLAYGROUND AREA
PKNG	PARKING
PLT	PLANTER
PR	PILLAR
PT	PICNIC TABLE
RMP	RAMP
RW	RETAINING WALL
S	SANITARY SEWER
SB	SPEED BUMP
SCR	SCREEN WALL
SCO	SEWER CLEANOUT
SD	STORM DOOR
SDR	STORM DOOR RISER
SPDL	SPEED LIMIT SIGN
ST	STEP/STOOP
STR	STAIRCASE
T	TELEPHONE
TC	TOP OF CURB
TG	TOP OF GRATE
TVT	TEL. VAULT
W	WATER
WL	WALL
WVT	WATER VAULT
???	ORIGIN/DESTINATION UNKNOWN

FIELD SURVEY LEGEND

- AIR RELEASE VALVE
- BLOW OFF
- BOLLARD
- CABLE TELEVISION PULL BOX
- DOOR
- ELECTRIC METER
- ELECTRICAL MANHOLE
- ELECTRICAL PULL BOX
- FIRE DEPARTMENT CONNECTION
- FIRE HYDRANT
- GAS VALVE
- GAS METER
- GUY WIRE
- IRRIGATION CONTROL VALVE
- PARKING LIGHT
- MAILBOX
- MANHOLE
- PALM TREE
- PARKING METER
- SEWER MAN HOLE
- SEWER CLEAN OUT
- SIGN
- STREET LIGHT
- STREET LIGHT PULL BOX
- STORM DOOR MAN HOLE
- TELEPHONE MANHOLE
- TELEPHONE PULL BOX
- TREE
- TRAFFIC SIGNAL
- TRAFFIC SIGNAL PULL BOX
- VENT
- WATER METER
- WATER MAN HOLE
- WATER VALVE
- UTILITY POLE
- (24.00) SPOT GRADE

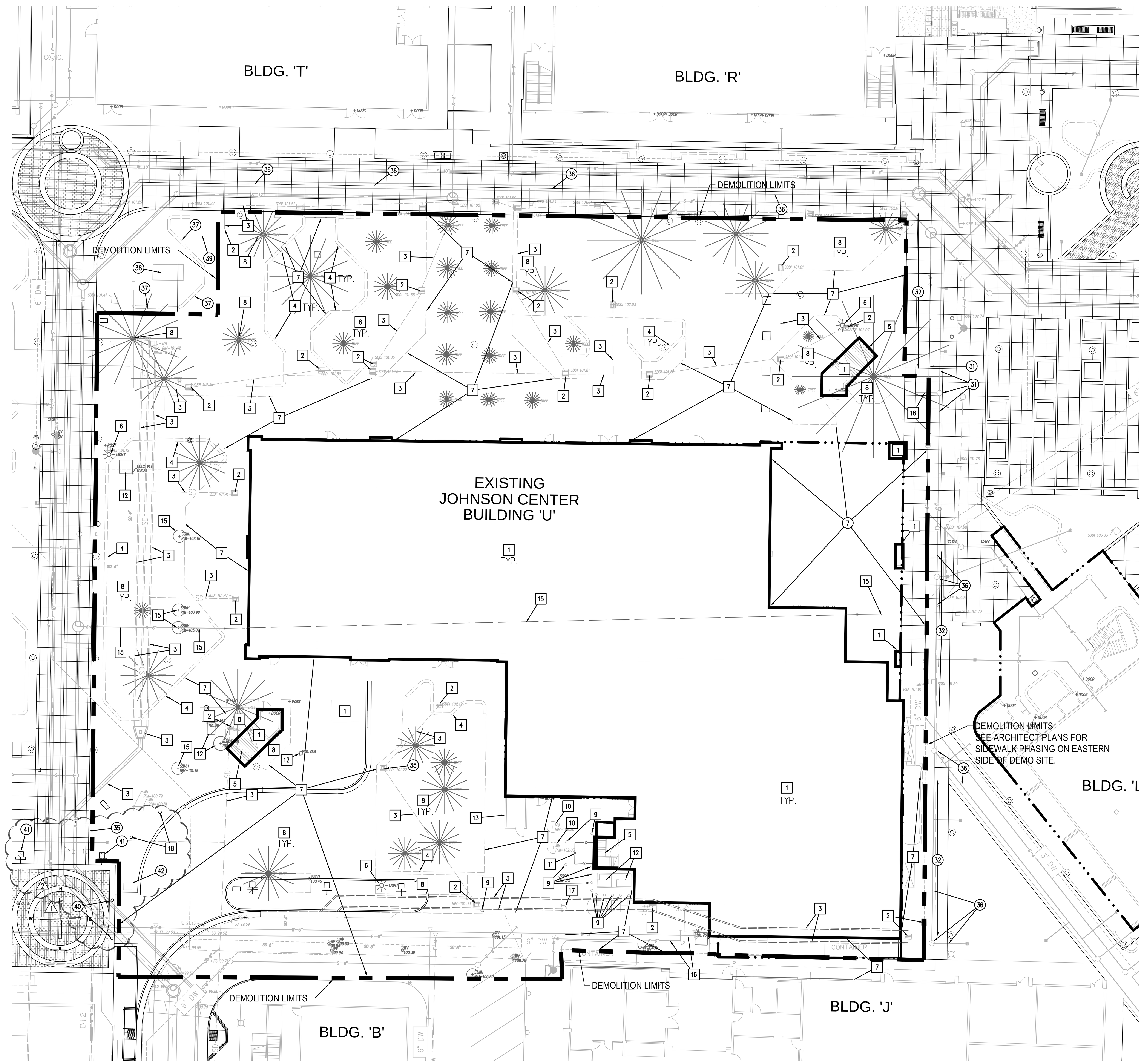

20 0 20 40 scale 1"= 20' feet

EXISTING SITE AND DEMOLITION PLAN SCALE 1" = 20'-0" 1

GRADING NOTES:

△1 1. EXISTING CONCRETE, BASE ROCK, AND REBAR TO BE REMOVED. SEPARATE DEMOLISHED MATERIAL PER LEED GREEN BUILDING RATING SYSTEM WASTE MANAGEMENT. ALL EDGES TO BE SAWCUT WITH A CLEAN EDGE, OR JOINT TO JOINT, PANEL TO PANEL. FOR BID PURPOSES, CONTRACTOR SHALL ASSUME 6" OF CONCRETE OVER 6" OF BASE CONCRETE AT HARDSCAPE.SIDEWALK.
2. ALL WORK SHALL BE IN ACCORDANCE WITH THE 2013 CBC AND THE CITY OF SANTA ANA GRADING ORDINANCE AND ANY SPECIAL REQUIREMENTS.
3. CUT SLOPES SHALL BE NO LONGER THAN 2 HORIZONTAL TO 1 VERTICAL.
4. FILLS SHALL BE COMPACTED THROUGHOUT TO A MINIMUM RELATIVE COMPACTION OF 90%. TESTING SHALL BE IN ACCORDANCE WITH ASTM TEST METHODS D1556, D2937, D2922, AND D3017.
5. AREAS TO RECEIVE FILL SHALL BE PROPERLY PREPARED AND COMPACTED TO 90% RELATIVE DENSITY.
6. ANY EXISTING IRRIGATION LINES SHALL BE REMOVED OR CAPPED AT LIMITS OF DEMOLITION AND BACKFILLED PER DIRECTION OF THE OWNER'S REPRESENTATIVE.
7. ALL TRENCH BACKFILLS SHALL BE TESTED AND CERTIFIED BY THE SITE GEOTECHNICAL ENGINEER PER THE GRADING CODE.
8. THE GEOTECHNICAL ENGINEER AND ENGINEERING GEOLOGIST SHALL PERFORM SUFFICIENT TESTS AND INSPECTIONS AND BE AVAILABLE DURING GRADING AND CONSTRUCTION TO VERIFY COMPLIANCE WITH THE PLANS, POLITICIZATIONS, AND CODE WITHIN THEIR PURVIEW. ENGINEERED FILL SHALL BE TESTED FOR STRUCTURAL CAPACITY.
9. THE PERMITTEE SHALL COMPLY WITH THE GRADING CODE REQUIREMENTS WHEN AN EXCESS OF 5,000 CUBIC YARDS OF EARTH IS MOVED ON PUBLIC ROADWAYS FROM THE SITE OF EARTH GRADING OPERATION.

GENERAL NOTES:

1. PROTECT ALL ITEMS OUTSIDE OF DEMOLITION AREA DURING JOHNSON CENTER BUILDING DEMOLITION AND CONSTRUCTION
2. REMOVE INTERFERING SECTIONS OF LANDSCAPING AS REQUIRED.
3. GRADING OF CLEARED SITE TO BE DETERMINED DURING FINAL SITE IMPORT AFTER LEVELING AND COMPACTION OF ANY EXCAVATIONS. DEMOLITION AREA PERIMETER TO BE GRADED TO JOIN AND MATCH EXISTING ELEVATIONS. REFER TO SHEET C2.00 FOR FINAL GRADING.
4. REFER TO ATTACHED AS-BUILT DRAWINGS FOR FURTHER INFORMATION ON BUILDING FOUNDATION REINFORCEMENTS, PILES, AND FOOTING DEPTHS - REFERENCE ONLY.
5. REMOVE ALL CAMERAS MOUNTED ON EXISTING JOHNSON CENTER BUILDING AND TURN OVER TO DISTRICT.

△1 6. CONTRACTOR WILL KEEP A RECORD OF AS-BUILTS AND PROVIDE AT END OF CERTIFICATION.

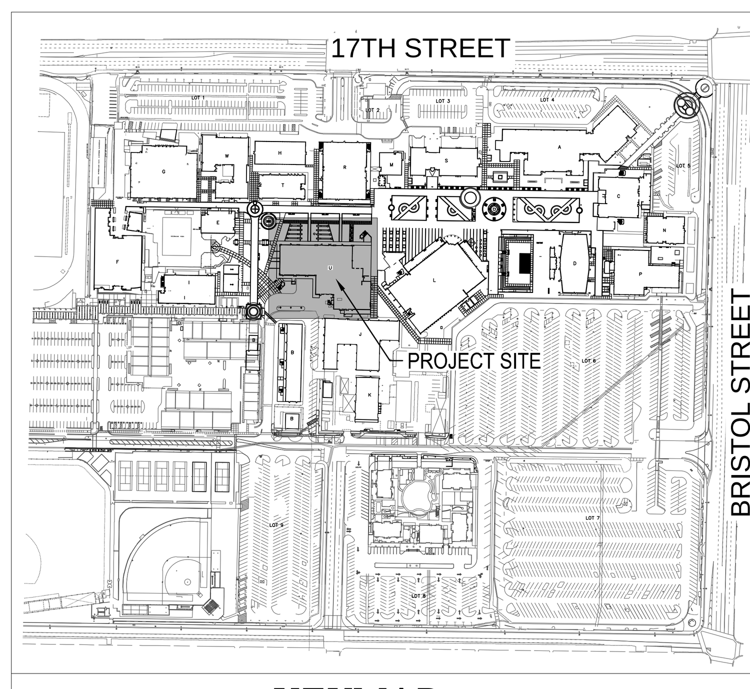

KEYMAP

PROJECT TITLE

JOHNSON STUDENT CENTER DEMOLITION
1530 West 17th Street, Santa Ana, CA 92706

RANCHO SANTIAGO Community College District

2323 NORTH BROADWAY
SANTA ANA, CA 92706

SUBMITTALS

#	DATE	DESCRIPTION
	12/07/2017	100% CD SUBMITTAL
△1	09/28/2018	ADDENDUM 4
△2	10/15/2018	DELTA 8

PROJECT IDENTIFICATION Project Number

THESE DRAWINGS ORIGINALLY CREATED IN AUTODESK REVIT V. 2014

THE ORIGINAL SIZE OF THIS SHEET IS 30" X 42".

DRAWN BY - SR/MO

CHECKED BY - MSO

THESE DRAWINGS AND SPECIFICATIONS ARE THE PROPERTY AND COPYRIGHT OF THE ARCHITECT AND SHALL NOT BE USED ON ANY OTHER PROJECT OR LOCATIONS EXCEPT AS DESCRIBED ON THE DRAWINGS, WITHOUT WRITTEN AGREEMENT WITH THE ARCHITECT.

© HILL PARTNERSHIP INC. 2014

SHEET TITLE

EXISTING SITE AND DEMOLITION PLAN

SHEET NUMBER

C1.00

N

CONSTRUCTION DOCUMENTS

11/25/2015 9:00:25 AM :\Users\LPadilla\Documents\SAC_Johnson_Demolition_lpadilla.rvt

Drawing Name: S:\140204\Eng\140204.2000 SAC Johnson Center\Final Plots\C1.00_demo.dwg Tab Name: LAYOUT1
Last Opened: Oct 15, 2018 - 2:59pm by: mso

Exhibit B (14 Pages)

SANTA ANA COLLEGE - JOHNSON CENTER
Audio Visual Systems
Exhibit B - MAJOR EQUIPMENT AND APPROVED MANUFACTURERS LIST AV SYSTEMS PRICING SUMMARY SHEET

10/12/2018

AV Budget ROM

System	Qty	Room Total	Room Type Total
Meeting Rm. - [J104 & J109]	2	$0	$0
Divisible Conf. Ctr. J219 - [J219-1, J219-2, J219-3, J219-4]	1	$0	$0
Common Areas	1	$0	$0
Campus Store - [J106-1]	1	$0	$0
Coffee/Juice Bar - [J107-1]	1	$0	$0
The Spot - [J101]	1	$0	$0
Office	20	$0	$0
Open Computer Lab - [J108-1]	1	$0	$0
S.S.S.P. & Upward Bound - [J209]	1	$0	$0
		TOTAL PROJECT COST:	**$0**

SANTA ANA COLLEGE - JOHNSON CENTER

Audio Visual Systems
Exhibit B - MAJOR EQUIPMENT AND APPROVED MANUFACTURERS LIST AV SYSTEMS PRICING SUMMARY SHEET

10/12/2018

System	Room Type Quanitity	Equipment & Materials Cost	Taxes	Installation Cost	Programming Cost	Testing & Commissioning Cost	Sub-Contract Labor Cost	Room Total	Room Type Total
Meeting Rm. - [J104 & J109]	2	$ -	$ -	$ -	$ -	$ -	$ -	$0.00	$0.00
Divisible Conf. Ctr. J219 - [J219-1, J219-2, J219-3, J219-4]	1	$ -	$ -	$ -	$ -	$ -	$ -	$0.00	$0.00
Common Areas	1	$ -	$ -	$ -	$ -	$ -	$ -	$0.00	$0.00
Campus Store - [J106-1]	1	$ -	$ -	$ -	$ -	$ -	$ -	$0.00	$0.00
Coffee/Juice Bar - [J107-1]	1	$ -	$ -	$ -	$ -	$ -	$ -	$0.00	$0.00
The Spot - [J101]	1	$ -	$ -	$ -	$ -	$ -	$ -	$0.00	$0.00
Office	20	$ -	$ -	$ -	$ -	$ -	$ -	$0.00	$0.00
Open Computer Lab - [J108-1]	1	$ -	$ -	$ -	$ -	$ -	$ -	$0.00	$0.00
S.S.S.P. & Upward Bound - [J209]	1	$ -	$ -	$ -	$ -	$ -	$ -	$0.00	$0.00

TOTAL PROJECT COST: **$0.00**

Exhibit B - MAJOR EQUIPMENT AND APPROVED MANUFACTURERS LIST

Version/Date: 10/12/2018

PlanNet Consulting

OFE/ OFCI?	Qty	Description	Brand	Model #	Price	Extension	Sub-System Total
Meeting Rm. - [J104 & J109]							
		Displays/Screens					
PRJ1	1	BrightLink Pro 1460Ui Short-Throw WUXGA Interactive Projector @ 4,400 lumens (w/ wall mount)	Epson	V11H726520W	$ -	$ -	
	1	100" diagonal whiteboard projection screen, thin frame, full length marker tray	Da-Lite	25940T	$ -	$ -	
							$ -
		Video Systems					
CC1	2	Cable Cubby 1200	Extron	70-1037-02	$ -	$ -	
	2	(2) AC & (2) USB Charging Outlets	Extron	60-1697-01	$ -	$ -	
	2	Cable Retraction System, HDMI	Extron	70-1065-04	$ -	$ -	
	2	Cable Retraction System, VGA w/ Audio	Extron	70-1065-11	$ -	$ -	
	2	Cable Retraction System, Network	Extron	70-1065-03	$ -	$ -	
	1	Installation Routing Template for Cable Cubby 1200	Extron	70-1041-80	$ -	$ -	
TX1	2	DTP T DSW 4K 233; 3-Input Switcher & DTP 4K Transmitter	Extron	60-1487-12	$ -	$ -	
RX1	1	DTP HDMI 4K 230 Rx	Extron	60-1271-13	$ -	$ -	
SW1	1	IN1608xi; 8-Input Scaling Presentation Switcher, HDCP compliant	Extron	60-1238-81	$ -	$ -	
DVD1	1	*OFE* Blu-ray Player	TBD	TBD			
CAM1	1	USB PTZ camera	Logitech	PTZ Pro	$ -	$ -	
	1	Extension system for Logitech PTZ Pro	TBD	TBD	$ -	$ -	
PC1	1	*OFE* In-room PC w/ keyboard & mouse	TBD	TBD			
WPG1	1	ShareLink 250, Wireless Presentation Gateway w/ built-in WAP	Extron	60-1558-01	$ -	$ -	
							$ -
		Audio					
DSP1	1	12 x 8 microphone mixer/DSP w/ USB, VoIP, & Dante	Biamp	TesiraFORTE DAN VT	$ -	$ -	
S1	4	4.5" Low Profile Ceiling Speaker	QSC	AD-C4T-LP	$ -	$ -	
MIC1	1	Ceiling Array Microphone	Shure	MXA910	$ -	$ -	
AMP1	1	XPA 2001, 70V Mono Amplifier	Extron	60-850-01	$ -	$ -	
ALS1	1	*PRICE REFLECTED IN CONF. CTR. 219* RF-based Portable Assistive Listening Kit (includes bodypack transmitter w/ headworn mic, (7) bodypack receivers w/ hearing aid-compatible ear speakers)	Listen	LS-06-072	$ -	$ -	
							$ -
		Control System					
DOC1	1	Secure wall docking station for iPad	TBD	TBD	$ -	$ -	
TP1	1	10" (approx.) iPad	Apple	TBD	$ -	$ -	
CI1	1	IP-to-IR Adapter, PoE powered	Global Cache	IP2IR-P	$ -	$ -	
CI2	1	IP-to-Serial Adapter, PoE powered	Global Cache	IP2SL-P	$ -	$ -	
NSW1	1	8-port PoE Gigabit switch	Netgear	GS608PP	$ -	$ -	
							$ -
		Other/Miscellaneous					
RCK1	1	Rolling Rack with wood top and plexi door	Middle Atlantic	PTRK-2126MDK	$ -	$ -	
	1	**Keyboard sliding shelf w/ flip-up 17" 1080p LCD monitor & VGA/DVI input**	**StarTech**	**RACKCONS17HD**	$ -	$ -	
	1	Miscellaneous Cables, connectors and materials	TBD	TBD	$ -	$ -	
							$ -
		AVC Additions					
					$ -	$ -	
					$ -	$ -	
							$ -
		TOTALS					

Equipment Total:	**$ -**
Taxes:	**$ -**
Installation:	**$ -**
Programming:	**$ -**
Testing & Commissioning:	**$ -**
Sub-Contractor Labor:	**$ -**
Room Total	**$ -**

Exhibit B - MAJOR EQUIPMENT AND APPROVED MANUFACTURERS LIST

Version/Date: 10/12/2018

PlanNet Consulting

OFE/ OFCI?	Qty	Description	Brand	Model #	Price	Extension	Sub-System Total
Divisible Conf. Ctr. J219 - [J219-1, J219-2, J219-3, J219-4]							
		Displays/Screens					
DISP1	3	82" TV LED 4K display (219-1, 219-2 & 219-3)	Samsung	UN82MU8000	$ -	$ -	
	3	Articulating Thin wall mount w/ interface bracket	Chief	PNRIWUB	$ -	$ -	
	3	In-Wall Back Box - Provided & installed by others	Chief	PAC501B	$ -	$ -	
PRJ1	3	Laser Projector (6,000 lumen) 4K enhanced, HDBaseT input	Epson	Pro L1100U	$ -	$ -	
	3	RPA Elite Series Projector Mount (including mounting hardware)	Chief	RPMAU	$ -	$ -	
SCN1	1	Tensioned Large Advantage Electrol Screen, 110"x176" (208" diag.)	Da-Lite	70243L	$ -	$ -	
SCN2	2	Tensioned Contour Electrol Screen, High-Contrast Matte White, 87"x139" (164" diag.)	Da-Lite	37613L	$ -	$ -	
							$ -
		Video Systems					
CC1	4	Cable Cubby 1200	Extron	70-1037-02	$ -	$ -	
	4	(2) AC & (2) USB Charging Outlets	Extron	60-1697-01	$ -	$ -	
	4	Cable Retraction System, HDMI	Extron	70-1065-04	$ -	$ -	
	4	Cable Retraction System, VGA w/ Audio	Extron	70-1065-11	$ -	$ -	
	4	Cable Retraction System, Network	Extron	70-1065-03	$ -	$ -	
TX1	4	DTP T DSW 4K 233; 3-Input Switcher & DTP 4K	Extron	60-1487-12	$ -	$ -	
TX2	1	DTP HDMI 4K 230 Tx (J219-3 82" display)	Extron	60-1271-12	$ -	$ -	
RX1	3	DTP HDMI 4K 230 Rx (82" displays)	Extron	60-1271-13	$ -	$ -	
SW1	4	IN1608xi; 8-Input Scaling Presentation Switcher, HDCP compliant	Extron	60-1238-81	$ -	$ -	
WPG1	4	ShareLink 250, Wireless Presentation Gateway w/ built-in WAP	Extron	60-1558-01	$ -	$ -	
	4	*OFE* Blu-ray Player	Sony/Samsung	TBD			
	4	*OFE* Cable/Satellite Tuner	OFCI	TBD			
	4	*OFE* Small Form Factor PC	OFCI	TBD			
							$ -
		Audio					
SPK1	12	4.5" Low Profile Ceiling Speaker	QSC	AD-C4T-LP	$ -	$ -	
AMP2	2	4-Channel Energy Star Rated Amplifier	QSC	SPA4-100	$ -	$ -	
DSP1	2	12 x 8 microphone mixer/DSP w/ USB, VoIP, & Dante	Biamp	TesiraFORTE DAN VT	$ -	$ -	
MIC2	3	Ceiling Mics (Zones 1, 2, 3)	Audix	M3	$ -	$ -	
WMIC1	1	Wireless Combo System w/ Handheld & Lav (Zone 4)	Shure	GLXD124R/85	$ -	$ -	
ALS1	1	RF-based Portable Assistive Listening Kit (includes bodypack transmitter w/ headworn mic, (7) bodypack receivers w/ hearing aid-compatible ear speakers)	Listen	LS-06-072	$ -	$ -	
MIX1	1	24-channel mixing console	Allen & Heath	ZED-24	$ -	$ -	
RP1	1	1RU Custom Rack Panel	TBD	TBD	$ -	$ -	
							$ -
		Control System					
TP1	4	iPad based Control System w/ Wall Docking Station	Apple/Utelogy through WAPs	TBD	$ -	$ -	
NSW2	1	16-port PoE Gigabit switch (J219-4)	Netgear	JGS516PE	$ -	$ -	
NSW1	3	8-port PoE Gigabit switch (J219-1/2/3)	Netgear	GS608PP	$ -	$ -	
CI1	8	IP-to-IR Adapter, PoE powered	Global Cache	IP2IR-P	$ -	$ -	
CI2	2	IP-to-RELAY Adapter, PoE powered (1 - RM 219-3, 1 - RM 219-4)	Global Cache	IP2CC-P	$ -	$ -	
CI3	3	IP-to-Serial Adapter, PoE powered (projectors)	Global Cache	IP2SL-P	$ -	$ -	
							$ -
		Other/Miscellaneous					
	1	25RU Full-Size Rack, 27" Depth (w/o rear door)	Middle Atlantic	BGR-25SA27MDK-EA	$ -	$ -	
	1	Caster Base	Middle Atlantic	CBS-BGR	$ -	$ -	
	1	Lacing Bar Accessory Kit	Middle Atlantic	LL-MP21	$ -	$ -	
	1	**Keyboard sliding shelf w/ flip-up 17" 1080p LCD monitor & VGA/DVI input**	**StarTech**	**RACKCONS17HD**	$ -	$ -	
	1	2RU Drawer	Middle Atlantic	D2LK	$ -	$ -	
	3	16RU Low-Profile Furniture Rack Frame, 18" Depth	Middle Atlantic	CFR-16-18	$ -	$ -	
	3	Runner Kit, 18"D	Middle Atlantic	5-RS18	$ -	$ -	
	3	Horizontal Power Strip	Middle Atlantic	PD-915R-SP	$ -	$ -	

Exhibit B - MAJOR EQUIPMENT AND APPROVED MANUFACTURERS LIST

Version/Date: 10/12/2018

PlanNet Consulting

OFE/ OFCI?	Qty	Description	Brand	Model #	Price	Extension	Sub-System Total
	2	Horizontal Lacing Bars, L-Shaped (10-pack)	Middle Atlantic	LBP-1A	$ -	$ -	
	3	**Keyboard sliding shelf w/ flip-up 17" 1080p LCD monitor & VGA/DVI input**	**StarTech**	**RACKCONS17HD**	$ -	$ -	
	1	Miscellaneous Cables, connectors and materials	TBD	TBD	$ -	$ -	
							$ -
		AVC Additions					
					$ -	$ -	
					$ -	$ -	
							$ -
		TOTALS					
						Equipment Total:	$ -
						Taxes:	$ -
						Installation:	$ -
						Programming:	$ -
						Testing & Commissioning:	$ -
						Sub-Contractor Labor:	$ -
						Room Total	$ -

Exhibit B - MAJOR EQUIPMENT AND APPROVED MANUFACTURERS LIST

Version/Date: 10/12/2018
PlanNet Consulting

OFE/ OFCI?	Qty	Description	Brand	Model #	Price	Extension	Sub-System Total
Common Areas							
		Displays/Screens					
DISP3	9	55" Info Displays (landscape orientation @ +72"AFF), on board chip media player	Samsung Pro	PM55F	$ -	$ -	
DISP2	10	43" Digital Signage TVs (portrait orientation @ +66"AFF), on board chip media player	Samsung Pro	PM43F	$ -	$ -	
	9	Articulating Thin wall mount w/ interface bracket	Chief	TS525TU	$ -	$ -	
	10	Articulating Thin wall mount w/ interface bracket	Chief	TS325TU	$ -	$ -	
	19	In-Wall Storage Box (white)	Chief	PAC526FW	$ -	$ -	
						$ -	
							$ -
		Video Systems					
	2	HDMI cable & wall plate	TBD	TBD	$ -	$ -	
							$ -
		Other/Miscellaneous					
	19	Miscellaneous Cables, connectors and materials	TBD	TBD	$ -	$ -	
							$ -
		AVC Additions					
						$ -	
						$ -	
							$ -
		TOTALS					
						Equipment Total:	$ -
						Taxes:	$ -
						Installation:	$ -
						Programming:	$ -
						Testing & Commissioning:	$ -
						Sub-Contractor Labor:	$ -
						Room Total	$ -

Exhibit B - MAJOR EQUIPMENT AND APPROVED MANUFACTURERS LIST

Version/Date: 10/12/2018

PlanNet Consulting

OFE/ OFCI?	Qty	Description	Brand	Model #	Price	Extension	Sub-System Total
Campus Store - [J106-1]							
		Displays/Screens					
DISP4	2	65" TV (@ Refund/Buyback Counters, 1 in millwork)	Samsung	QN65F	$ -	$ -	
	2	Articulating Thin wall mount w/ interface bracket	Chief	TS525TU	$ -	$ -	
	2	In-Wall Back Box - Provided & installed by others	Chief	PAC526	$ -	$ -	
							$ -
		Video Systems					
	2	Digital Signage Player	Samsung	SBB-AQ7	$ -	$ -	
							$ -
		Audio					
S1	**6**	4.5" Low Profile Ceiling Speaker	QSC	AD-C4T-LP	$ -	$ -	
S2	2	4.5" Surface-Mount Speaker	QSC	AD-S4T	$ -	$ -	
AMP2	2	4-Channel Energy Star Rated Amplifier	QSC	SPA4-100	$ -	$ -	
VC1	1	100W Stainless Steel Volume Control Knob, 1-gang	AtlasIED	AT100	$ -	$ -	
							$ -
		Other/Miscellaneous					
	1	Miscellaneous Cables, connectors and materials	TBD	TBD	$ -	$ -	
							$ -
		AVC Additions					
						$ -	
						$ -	
						$ -	
							$ -
		TOTALS					
						Equipment Total:	$ -
						Taxes:	$ -
						Installation:	$ -
						Programming:	$ -
						Testing & Commissioning:	$ -
						Sub-Contractor Labor:	$ -
						Room Total	$ -

Exhibit B - MAJOR EQUIPMENT AND APPROVED MANUFACTURERS LIST

Version/Date: 10/12/2018

PlanNet Consulting

OFE/ OFCI?	Qty	Description	Brand	Model #	Price	Extension	Sub-System Total
Coffee/Juice Bar - [J107-1]							
		Displays/Screens					
DISP2	4	43" Digital Signage TVs (portrait orientation @ +66"AFF), on board chip media player	Samsung Pro	PM43F	$ -	$ -	
	1	Ceiling-Mounted Menu Board Mounting System	Chief	LCM3X1U	$ -	$ -	
	1	Ceiling-Mounted Display Mounting System	Chief	TBD	$ -	$ -	
	3	Medium size tilting wall mount	Chief	MTM1U	$ -	$ -	
							$ -
		Audio					
SPK1	1	4.5" Low Profile Ceiling Speaker	QSC	AD-C4T-LP	$ -	$ -	
							$ -
		Other/Miscellaneous					
	1	Miscellaneous Cables, connectors and materials	TBD	TBD	$ -	$ -	
							$ -
		AVC Additions					
						$ -	
						$ -	
						$ -	
							$ -
		TOTALS					
						Equipment Total:	$ -
						Taxes:	$ -
						Installation:	$ -
						Programming:	$ -
						Testing & Commissioning:	$ -
						Sub-Contractor Labor:	$ -
						Room Total	$ -

Exhibit B - MAJOR EQUIPMENT AND APPROVED MANUFACTURERS LIST

Version/Date: 10/12/2018
PlanNet Consulting

OFE/ OFCI?	Qty	Description	Brand	Model #	Price	Extension	Sub-System Total
The Spot - [J101]							
		Displays/Screens					
DISP3	1	65" TV (digital signage)	Samsung	QN65F	$ -	$ -	
DISP4	2	46" TV (video game TVs)	Samsung	UH46FS	$ -	$ -	
	1	Articulating Thin wall mount w/ interface bracket (signage display)	Chief	TS525TU	$ -	$ -	
	1	In-Wall Back Box - Provided & installed by others (signage display)	Chief	PAC526	$ -	$ -	
	1	Laser Projector (6,000 lumen) 4K enhanced, HDBaseT input	Epson	Pro L1100U	$ -	$ -	
	1	RPA Elite Series Projector Mount (including mounting hardware)	Chief	RPMAU	$ -	$ -	
SCRN3	1	Tensioned Contour Electrol Screen, High-Contrast Matte White, 87"x139" (164" diag.)	Da-Lite	37613L	$ -	$ -	
							$ -
		Video Systems					
	2	*OFE* Video Game Console	OFCI	TBD		$ -	
	1	*OFE* Blu-ray Player	Sony/Samsung	TBD		$ -	
	1	*OFE* Cable/Satellite Tuner	OFCI	TBD		$ -	
	1	*OFE* Small Form Factor PC	OFCI	TBD		$ -	
	1	Digital Signage Player	TBD	TBD	$ -	$ -	
SW1	1	IN1608xi; 8-Input Scaling Presentation Switcher, HDCP compliant	Extron	60-1238-81	$ -	$ -	
							$ -
		Audio					
	6	4.5" Low Profile Ceiling Speaker	QSC	AD-C4T-LP	$ -	$ -	
AMP3	1	2-Channel Energy Star Rated Amplifier	QSC	SPA2-60	$ -	$ -	
	1	Wireless Combo System w/ Handheld & Lav	Shure	GLXD124R/85	$ -	$ -	
DSP1	1	12 x 8 microphone mixer/DSP w/ USB, VoIP, & Dante	Biamp	TesiraFORTE DAN VT	$ -	$ -	
ALS1	1	*PRICE REFLECTED IN CONF. CTR. 219* RF-based Portable Assistive Listening Kit (includes bodypack transmitter w/ headworn mic, (7) bodypack receivers w/ hearing aid-compatible ear speakers)	Listen	LS-06-072	$ -	$ -	
							$ -
		Control System					
TP1	1	iPad based Control System w/ Wall Docking Station	Apple	TBD	$ -	$ -	
NSW1	1	8-port PoE Gigabit switch	NETGEAR	GS608NA	$ -	$ -	
CI1	2	IP-to-IR Adapter, PoE powered	Global Cache	IP2IR-P	$ -	$ -	
CI2	1	IP-to-RELAY Adapter, PoE powered (1 - RM 219-3, 1 - RM 219-4)	Global Cache	IP2CC-P	$ -	$ -	
CI3	1	IP-to-Serial Adapter, PoE powered (projectors)	Global Cache	IP2SL-P	$ -	$ -	
						$ -	
							$ -
		Other/Miscellaneous					
	1	Small Equipment Rack with sliders	Middle Atlantic	CFR-12-16	$ -	$ -	
	1	Digital Signage Player	Samsung	SBB-AQ7	$ -	$ -	
	1	Miscellaneous Cables, connectors and materials	TBD	TBD	$ -	$ -	
							$ -
		AVC Additions					
						$ -	
						$ -	
						$ -	
						$ -	
						$ -	
							$ -
		TOTALS					
						Equipment Total:	$ -
						Taxes:	$ -
						Installation:	$ -
						Programming:	$ -
						Testing & Commissioning:	$ -
						Sub-Contractor Labor:	$ -
						Room Total	$ -

Exhibit B - MAJOR EQUIPMENT AND APPROVED MANUFACTURERS LIST

Version/Date: 10/12/2018

PlanNet Consulting

OFE/ OFCI?	Qty	Description	Brand	Model #	Price	Extension	Sub-System Total
Office							
		Displays/Screens					
DISP2	1	43" TV	Samsung Pro	PM43F	$ -	$ -	
	1	Articulating Thin wall mount w/ interface bracket	Chief	TS525TU	$ -	$ -	
	1	In-Wall Back Box - Provided & installed by others	Chief	PAC526	$ -	$ -	
							$ -
		Other/Miscellaneous					
	1	Miscellaneous Cables, connectors and materials	TBD	TBD	$ -	$ -	
							$ -
		AVC Additions					
						$ -	
						$ -	
						$ -	
							$ -
		TOTALS					
						Equipment Total:	$ -
						Taxes:	$ -
						Installation:	$ -
						Programming:	$ -
						Testing & Commissioning:	$ -
						Sub-Contractor Labor:	$ -
						Room Total	$ -

Exhibit B - MAJOR EQUIPMENT AND APPROVED MANUFACTURERS LIST

Version/Date: **10/12/2018**

PlanNet Consulting

OFE/ OFCI?	Qty	Description	Brand	Model #	Price	Extension	Sub-System Total
Private Tutoring (3) - [J207-3, J207-4 & J207-5]							
		Displays/Screens					
DISP2-1	1	43" TV (for Queuing Displays & Int'l Students Area)	Samsung Pro	PM43F	$ -	$ -	
	1	Articulating Thin wall mount w/ interface bracket	Chief	TS525TU	$ -	$ -	
	1	In-Wall Back Box - Provided & installed by others	Chief	PAC526	$ -	$ -	
							$ -
		Other/Miscellaneous					
	1	Miscellaneous Cables, connectors and materials	TBD	TBD	$ -	$ -	
							$ -
		AVC Additions					
						$ -	
						$ -	
						$ -	
							$ -
		TOTALS					
						Equipment Total:	$ -
						Taxes:	$ -
						Installation:	$ -
						Programming:	$ -
						Testing & Commissioning:	$ -
						Sub-Contractor Labor:	$ -
						Room Total	$ -

Exhibit B - MAJOR EQUIPMENT AND APPROVED MANUFACTURERS LIST

Version/Date: 10/12/2018

PlanNet Consulting

OFE/ OFCI?	Qty	Description	Brand	Model #	Price	Extension	Sub-System Total
Open Computer Lab - [J108-1]							
		Displays/Screens					
	1	BrightLink Pro 1460Ui Short-Throw WUXGA Interactive Projector @ 4,400 lumens (w/ wall mount)	Epson	V11H726520W	$ -	$ -	
	1	100" diagonal whiteboard projection screen, thin frame, full-length marker tray	Da-Lite	25940T	$ -	$ -	
							$ -
		Video Systems					
WPG1	1	ShareLink 250 W U; Wireless Collaboration Gateway - Dual Band	Extron	60-1558-01	$ -	$ -	
							$ -
		Other/Miscellaneous					
	1	Miscellaneous Cables, connectors and materials	TBD	TBD	$ -	$ -	
							$ -
		AVC Additions					
						$ -	
						$ -	
						$ -	
							$ -
		TOTALS					

Equipment Total:	$ -
Taxes:	$ -
Installation:	$ -
Programming:	$ -
Testing & Commissioning:	$ -
Sub-Contractor Labor:	$ -
Room Total	$ -

Exhibit B - MAJOR EQUIPMENT AND APPROVED MANUFACTURERS LIST

Version/Date: 10/12/2018

PlanNet Consulting

OFE/ OFCI?	Qty	Description	Brand	Model #	Price	Extension	Sub-System Total
S.S.S.P. & Upward Bound - [J209]							
		Displays/Screens					
PRJ1	1	BrightLink Pro 1460Ui Short-Throw WUXGA Interactive Projector @ 4,400 lumens (w/ wall mount)	Epson	V11H726520W	$ -	$ -	
	1	100" diagonal whiteboard projection screen, thin frame, full-length marker tray	Da-Lite	25940T	$ -	$ -	
							$ -
		Video Systems					
CC1	2	Cable Cubby 1200	Extron	70-1037-02	$ -	$ -	
	2	(2) AC & (2) USB Charging Outlets	Extron	60-1697-01	$ -	$ -	
	2	Cable Retraction System, HDMI	Extron	70-1065-04	$ -	$ -	
	2	Cable Retraction System, VGA w/ Audio	Extron	70-1065-11	$ -	$ -	
	2	Cable Retraction System, Network	Extron	70-1065-03	$ -	$ -	
	1	Installation Routing Template for Cable Cubby 1200	Extron	70-1041-80	$ -	$ -	
TX1	2	DTP T DSW 4K 233; 3-Input Switcher & DTP 4K	Extron	60-1487-12	$ -	$ -	
RX1	1	DTP HDMI 4K 230 Rx	Extron	60-1271-13	$ -	$ -	
SW1	1	IN1608xi; 8-Input Scaling Presentation Switcher, HDCP compliant	Extron	60-1238-81	$ -	$ -	
DVD1	1	*OFE* Blu-ray Player	TBD	TBD			
CAM1	1	USB camera	Logitech	C920	$ -	$ -	
PC1	1	*OFE* In-room PC w/ keyboard & mouse	TBD	TBD		$ -	
WPG1	1	ShareLink 250, Wireless Presentation Gateway w/ built-in WAP	Extron	60-1558-01	$ -	$ -	
						$ -	
							$ -
		Audio					
DSP1	1	12 x 8 microphone mixer/DSP w/ USB, VoIP, & Dante	Biamp	TesiraFORTE DAN VT	$ -	$ -	
S1	4	4.5" Low Profile Ceiling Speaker	QSC	AD-C4T-LP	$ -	$ -	
AMP1	1	XPA 2001, 70V Mono Amplifier	Extron	60-850-01	$ -	$ -	
ALS1	1	*PRICE REFLECTED IN CONF. CTR. 219* RF-based Portable Assistive Listening Kit (includes bodypack transmitter w/ headworn mic, (7) bodypack receivers w/ hearing aid-compatible ear speakers)	Listen	LS-06-072	$ -	$ -	
							$ -
		Control System					
DOC1	1	Secure wall docking station for iPad	TBD	TBD	$ -	$ -	
TP1	1	10" (approx.) iPad	Apple	TBD	$ -	$ -	
CI1	1	IP-to-IR Adapter, PoE powered	Global Cache	IP2IR-P	$ -	$ -	
CI2	1	IP-to-Serial Adapter, PoE powered	Global Cache	IP2SL-P	$ -	$ -	
NSW1	1	8-port PoE Gigabit switch	Netgear	GS608PP	$ -	$ -	
							$ -
		Other/Miscellaneous					
RCK1	1	Rolling Rack with wood top and plexi door	Middle Atlantic	PTRK-2126MDK	$ -	$ -	
	1	**Keyboard sliding shelf w/ flip-up 17" 1080p LCD monitor & VGA/DVI input**	**StarTech**	**RACKCONS17HD**	$ -	$ -	
	1	Miscellaneous Cables, connectors and materials	TBD	TBD	$ -	$ -	
							$ -
		AVC Additions					
						$ -	
						$ -	
						$ -	
							$ -
		TOTALS					

Equipment Total:	$ -
Taxes:	$ -
Installation:	$ -
Programming:	$ -
Testing & Commissioning:	$ -
Sub-Contractor Labor:	$ -
Room Total	$ -

	A	B	C	D	E	F	G	H
1	**Exhibit B - MAJOR EQUIPMENT AND APPROVED**			**Version/Date:**	**10/12/2018**			
2	**MANUFACTURERS LIST**			**PlanNet Consulting**				
3								
4								
5								
6	**OFE/ OFCI?**	**Qty**	**Description**	**Brand**	**Model #**	**Price**	**Extension**	**Sub-System Total**
68								
69								

KS-1

SL-ADA-1921-A-GR

SUBMITTAL DATA

STYLIST GROUP
LEDGE TYPE - SINGLE BOWL
18 GAUGE

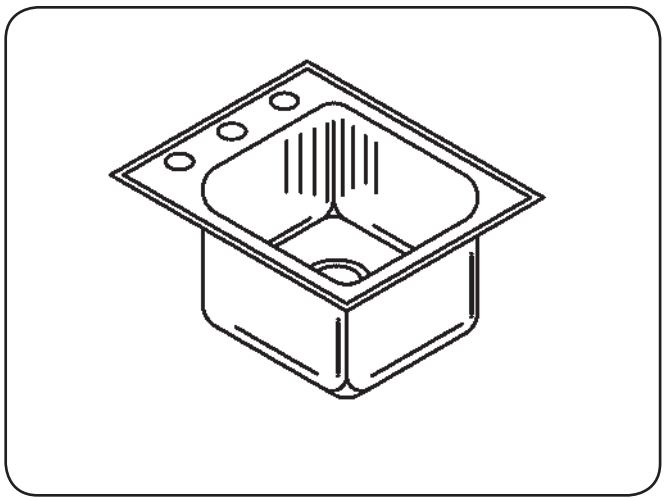

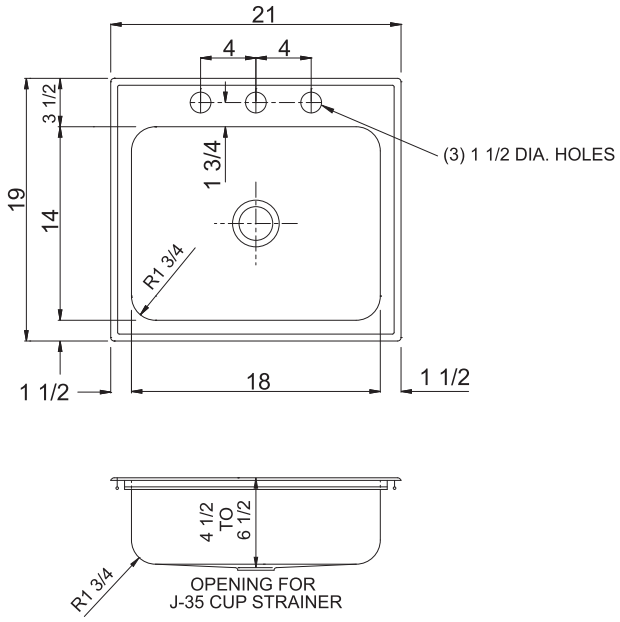

SPECIFICATION

Seamless die-drawn construction of Type 304, 18-8 stainless steel. Interior and top surfaces polished to a non-porous Hand-Blended Just Finish with highlighted bowl rim. Fully coated underside insulated for sound and reduces condensation. Straight-sided compartment with radius corners provides greater capacity. Self-rimming top mount Grip-Rim Plus with stainless steel mounting channels. Conforms to ASME/ANSI A112.19.3M. Certified conformance with ASME A112.19.3/CSA B45.4, Canadian Standards (CSA), Uniform Plumbing Code (UPC) and International Plumbing Code (IPC) and Americans with Disabilities Act(ADA).Drain punch 3-1/2" centered for Just J-35 drain.

☐ **TYPE 316 STAINLESS STEEL** (Check if applicable)

CUTOUT DIMENSIONS		
Model Number	Front-to-Back	Left-to-Right
SL-ADA-1921-A-GR	18-1/4	20-1/4

6.85 Gallon Capacity*

Capacity Matters
Max ID sizing with straight sided bowl configuration (non tapered sides). Tight corner radius design.

**Capacity is based on 6-1/2" Depths*

FAUCET PUNCHING - MUST BE SPECIFIED	
☐ (1) Hole Centered	
☐ (2) Holes on 4" centers	
☐ (3) Holes on 4 "centers(illustrated)	
☑ **Alternate Punching:** Faucet Model: 4 HOLES	**Punching Required:** 4 HOLES

DEPTH - MUST BE SPECIFIED:					
☐ 4 1/2" DEEP	☐ 5" DEEP	☐ 5-1/2" DEEP	☑ 6" DEEP	☐ 6-1/2" DEEP	

DRAIN LOCATION - MUST BE SPECIFIED:				
☐ CENTER	☑ CENTER REAR	☐ LEFT REAR	☐ RIGHT REAR	

APPROVED FOR MANUFACTURING

MODEL NO.: SL-ADA-1921-A-GR QTY: _____

JOB NAME: _____

TAG/ITEM: _____

CUSTOMER: _____

SIGNATURE: _____

MADE IN U.S.A.

JUST MFG. COMPANY CONTINUES TO MAKE QUALITY AND FUNCTIONALITY A MARK OF THE JUST PRODUCT LINE. TO DO SO REQUIRES THAT WE RESERVE THE RIGHT TO CHANGE PRODUCT INFORMATION WITHOUT NOTICE. DIMENSIONS MAY VARY AND ARE SUBJECT TO CHANGE WITHOUT NOTICE. NO RESPONSIBILITY IS ASSUMED FOR USE OF SUPERSEDED OR VOIDED DATA. FOR THE MOST CURRENT AND ACCURATE INFORMATION REGARDING THE COMPLETE LINE OF JUST SINKS, FAUCETS AND DRAINS, CLICK ON THE ***SPEC LINE DRAWINGS*** LINK ON OUR WEB SITE AT ***www.justmfg.com***

JUST MANUFACTURING COMPANY
9233 KING STREET . FRANKLIN PARK . ILLINOIS . 60131-2111
PH: 847-678-5150 . FAX: 847-678-6817 . E-MAIL: custserv@justmfg.com . www.justmfg.com

©2007-JUST MFG-REVISED-1/2009

KS-2

DL-ADA-1933-A-GR

SUBMITTAL DATA

STYLIST GROUP
LEDGE TYPE - DOUBLE BOWL
18 GAUGE

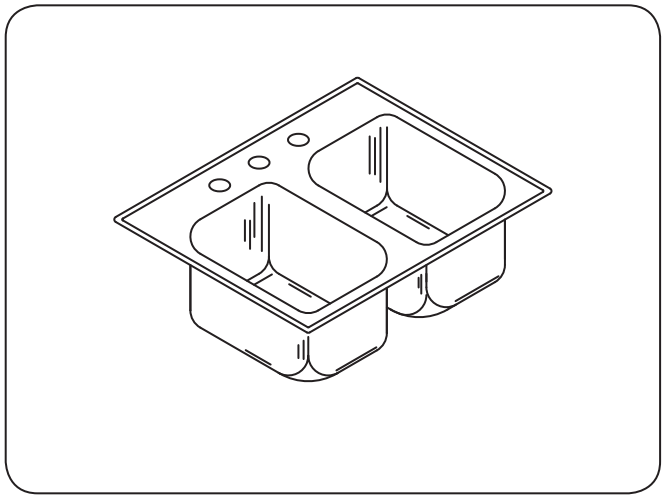

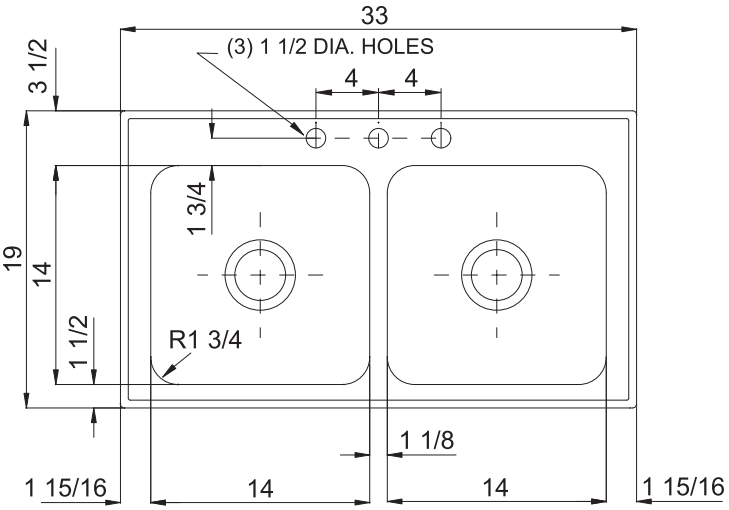

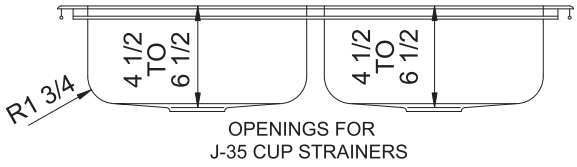

SPECIFICATION

Seamless die-drawn construction of Type 304, 18-8 stainless steel. Interior and top surfaces polished to a non-porous Hand-Blended Just Finish with highlighted bowl rim. Fully coated underside insulated for sound and reduces condensation. Straight-sided compartment with radius corners provides greater capacity.Self-rimming top mount Grip-Rim Plus with stainless steel mounting channels. Conforms to ASME/ANSI A112.19.3M. Certified conformance with ASME A112.19.3/CSA B45.4, Canadian Standards (CSA), Uniform Plumbing Code (UPC) and Inter national Plumbing Code (IPC) and Americans with Disabilities Act(ADA).Drain punch 3-1/2" centered for Just J-35 drain.

10.60 Gallon Capacity*

Capacity Matters
Max ID sizing with straight sided bowl configuration (non tapered sides). Tight corner radius design.

**Capacity is based on 6-1/2" Depths*

CUTOUT DIMENSIONS		
Model Number	Front-to-Back	Left-to-Right
DL-ADA-1933-A-GR	18-1/4	32-1/4

FAUCET PUNCHING - MUST BE SPECIFIED	
☐ (1) Hole Centered	
☐ (2) Holes on 4" centers	
☐ (3) Holes on 4 "centers(illustrated)	
☑ **Alternate Punching:** Faucet Model: 4 HOLES	**Punching Required:** 4 HOLES

DEPTH - MUST BE SPECIFIED:				
☐ 4 1/2" DEEP	☐ 5" DEEP	☐ 5-1/2" DEEP	☑ 6" DEEP	☐ 6-1/2" DEEP

DRAIN LOCATION - MUST BE SPECIFIED:			
☐ CENTER	☑ CENTER REAR	☐ LEFT REAR	☐ RIGHT REAR

APPROVED FOR MANUFACTURING

MODEL NO.: DL-ADA-1933-A-GR QTY: _____

JOB NAME: _____

TAG/ITEM: _____

CUSTOMER: _____

SIGNATURE: _____

MADE IN U.S.A.

JUST MFG. COMPANY CONTINUES TO MAKE QUALITY AND FUNCTIONALITY A MARK OF THE JUST PRODUCT LINE. TO DO SO REQUIRES THAT WE RESERVE THE RIGHT TO CHANGE PRODUCT INFORMATION WITHOUT NOTICE. DIMENSIONS MAY VARY AND ARE SUBJECT TO CHANGE WITHOUT NOTICE. NO RESPONSIBILITY IS ASSUMED FOR USE OF SUPERSEDED OR VOIDED DATA. FOR THE MOST CURRENT AND ACCURATE INFORMATION REGARDING THE COMPLETE LINE OF JUST SINKS, FAUCETS AND DRAINS, CLICK ON THE ***SPEC LINE DRAWINGS*** LINK ON OUR WEB SITE AT ***www.justmfg.com***

JUST MANUFACTURING COMPANY
9233 KING STREET . FRANKLIN PARK . ILLINOIS . 60131-2111
PH: 847-678-5150 . FAX: 847-678-6817 . E-MAIL: custserv@justmfg.com . www.justmfg.com

©2007-JUST MFG-REVISED-1/2009

10/16/2018 6:05:02 PM C:\Users\Eric Gomez\Documents\J7411_R16_MEPFA_Central_Eric Gomez.rvt

WATER HEATER - GAS FIRED

MARK	MANUFACTURER & MODEL	LOCATION	TYPE	SERVICE	STORAGE (GAL)	INPUT (CFH)	RECOVERY @ 80°F. (GPH)	THERM. EFF.	STOR. TEMP. (DEG F)	DIMENSIONS DIA. (IN)	DIMENSIONS HEIGHT (IN)	DIMENSIONS VENT DIA. (IN)	TEMP. IN (°F)	TEMP. OUT (°F)	ELECTRICAL V	ELECTRICAL Hz	ELECTRICAL Ph	OPER. WEIGHT (LBS)	REF. DETAIL (DWG)	REMARKS
GWH-1	BRADFORD WHITE EF-100T-250E-3NA	BOILER RM. 131	CONDENSING	DOMESTIC WATER HEATING	100	250	367	97%	140	28-1/4	77-5/8	3" INT. 3" EXH.	60	140	120	60	1	1,735	2/P6.04	ULTRA HIGH EFFICIENCY LOW NOX W/ AGA/ASME RATED & FACTORY INSTALLED TEMP. & PRESS. RELIEF VALVE. PROVIDE INTAKE & EXHAUST VENT PIPES & TERMINATE THRU ROOF. PROVIDE NEUTRALIZATION KIT, NSF COMPLIANCE KIT & CONCENTRIC VENT KIT. STORAGE TEMPERATURE = 140 DEG. F.
GWH-2	BRADFORD WHITE EF-100T-250E-3NA	BOILER RM. 131	CONDENSING	DOMESTIC WATER HEATING	100	250	367	97%	140	28-1/4	77-5/8	3" INT. 3" EXH.	60	140	120	60	1	1,735	2/P6.04	ULTRA HIGH EFFICIENCY LOW NOX W/ AGA/ASME RATED & FACTORY INSTALLED TEMP. & PRESS. RELIEF VALVE. PROVIDE INTAKE & EXHAUST VENT PIPES & TERMINATE THRU ROOF. PROVIDE NEUTRALIZATION KIT, NSF COMPLIANCE KIT & CONCENTRIC VENT KIT. STORAGE TEMPERATURE = 140 DEG. F.

EXPANSION TANK SCHEDULE

MARK	MANUFACTURER & MODEL	LOCATION	TYPE	SERVICE	TANK VOLUME (GAL.)	ACCEPT. VOLUME (GAL.)	CHARGING PRESSURE (PSIG)	WORKING PRESSURE (PSIG)	OPER. TEMP. (°F)	TANK SIZE DIA. (IN)	TANK SIZE HGT. (IN)	SYSTEM CONN. SIZE (NPT)	OPER. WEIGHT (LBS)	REF. DETAIL (DWG)	REMARKS
ET-1	AMTROL THERM-X-TROL MODEL ST-12-C	BOILER RM. 131	IN-LINE	GWH-1 & 2	6.4	3.2	40	150	200	12	13-3/8	3/4	93	1/P6.05	CONSTRUCTION PER ASME BOILER PRESSURE VESSEL CODE STEEL CONSTRUCTION. PRE-CHARGED 55 PSIG. PROVIDE AMTROL FILL-TROL VALVE AS PART OF THE INSTALLATION.

CIRCULATING PUMP SCHEDULE

MARK	MANUFACTURER & MODEL	LOCATION	TYPE	SERVICE	GPM	HEAD (FT.)	RPM	ELECTRICAL DATA WATTS	ELECTRICAL DATA VOLT	ELECTRICAL DATA PHASE	ELECTRICAL DATA HERTZ	OPER. WEIGHT (LBS)	REF. DETAIL (DWG)	REMARKS
CP-1	GRUNDFOS MODEL NO UPS26-99SFC	BOILER RM. 131	IN-LINE	EAST LOOP	5	15	-	197	120	1	60	12	1/P6.04	3-SPEED STAINLESS STEEL WET ROTOR CIRCULATOR, SET @ SPEED 1. MAX. WORKING PRESSURE=145 PSI, MAXIMUM OPERATING TEMPERATURE= 230°F. PROVIDE GRUNDFOS 3/4" CLIP-ON AQUASTAT CONTROL MODEL 595444 AND AUTOMATIC TIMER KIT 'UP' SERIES. INTERLOCK PUMP WITH AQUASTAT.
CP-2	GRUNDFOS MODEL NO UPS26-99SFC	BOILER RM. 131	IN-LINE	WEST LOOP	5	15	-	197	120	1	60	12	1/P6.04	3-SPEED STAINLESS STEEL WET ROTOR CIRCULATOR, SET @ SPEED 1. MAX. WORKING PRESSURE=145 PSI, MAXIMUM OPERATING TEMPERATURE= 230°F. PROVIDE GRUNDFOS 3/4" CLIP-ON AQUASTAT CONTROL MODEL 595444 AND AUTOMATIC TIMER KIT 'UP' SERIES. INTERLOCK PUMP WITH AQUASTAT.

GREASE INTERCEPTOR

MARK	MANUFACTURER & MODEL	LOCATION	TYPE	SERVICE	CAPACITY (GAL.)	INLET SIZE (IN)	OUTLET SIZE (IN)	OVERALL DIMENSIONS WIDTH (FT./IN.)	OVERALL DIMENSIONS OVERALL LENGTH (FT./IN.)	OVERALL DIMENSIONS TANK HEIGHT (FT./IN.)	REF. DETAIL (DWG)	REMARKS
GI-1	JENSEN PRE-CAST KJP1200G-LA	SOUTH SIDE-EXTERIOR	UNDERGROUND	FOOD SERVICE (KITCHEN)	1,200	4	4	5'-9"	8'-6"	6'-0"	4/P6.02	COMPLETE WITH THREE MANHOLES, SAMPLING BOX AND EXTENSIONS TO GRADE AS REQUIRED DESIGNED FOR DIRECT TRAFFIC WEIGHT (H20) COVERS. ENTIRE INSTALLATION SHALL CONFORM TO THE MANUFACTURER'S RECOMMENDATIONS, INCLUDING EXCAVATION SPECS. MINIMUM EXCAVATION: 6'-9"W x 9'-6"L x 1' TO 6' IN DEPTH.

THERMOSTATIC MIXING VALVE

MARK	MANUFACTURER & MODEL	LOCATION	TYPE	SERVICE	DESIGN FLOW (GPM)	PRESS. DROP (PSI)	MIN. FLOW (GPM)	INLET SIZE (IN)	OUTLET SIZE (IN)	VALVE DIMENSIONS WIDTH (IN)	VALVE DIMENSIONS HEIGHT (IN)	VALVE DIMENSIONS DEPTH (IN)	REMARKS
TMV-1	BRADLEY HL130 S59-3130-P	BOILER RM. 131	THERMOSTATIC HIGH-LOW	120°F HW SYSTEM (EAST LOOP)	43	6.0	4.0	1-1/4	1-1/2	14	13-1/2	4-7/8	LEAD-FREE BRASS DESIGN WITH LIQUID FILLED THERMOSTAT, INTEGRAL INLET STRAINER CHECKSTOPS, PIPED ASSEMBLY WITH INLET AND OUTLET SHUT-OFFS. PROVIDE TEMP. GAUGE ON OUTLET PIPE AND MANUFACTURER WALL MOUNTING BRACKET. INSTALL PER MANUFACTURERS INSTALLATION INSTRUCTIONS AND MANUFACTURER PIPING DIAGRAMS. VALVE CAPACITY IS SIZED BASED ON MANUFACTURER MODIFIED FLOW CURVE FOR FOOD SERVICE/RESTAURANTS.
TMV-2	BRADLEY HL80 S59-3080-P	BOILER RM. 131	THERMOSTATIC HIGH-LOW	120°F HW SYSTEM (WEST LOOP)	20	3.0	2.0	1	1-1/4	11-3/8	12-1/4	3-5/8	LEAD-FREE BRASS DESIGN WITH LIQUID FILLED THERMOSTAT, INTEGRAL INLET STRAINER CHECKSTOPS, PIPED ASSEMBLY WITH INLET AND OUTLET SHUT-OFFS. PROVIDE TEMP. GAUGE ON OUTLET PIPE AND MANUFACTURER WALL MOUNTING BRACKET. INSTALL PER MANUFACTURERS INSTALLATION INSTRUCTIONS AND MANUFACTURER PIPING DIAGRAMS. VALVE CAPACITY IS SIZED BASED ON MANUFACTURER MODIFIED FLOW CURVE FOR OFFICE/ADMINISTRATION OCCUPANCIES.

ELECTRIC WATER HEATER SCHEDULE

ALT. 2

MARK	MANUFACTURER MODEL NO.	TYPE	SERVICE/ LOCATION	FLOW (GPM)	DIMENSIONS LENGTH (IN.)	DIMENSIONS HEIGHT (IN.)	DIMENSIONS DEPTH (IN.)	TEMP IN (°F)	TEMP OUT (°F)	ELECTRICAL DATA WATTS	ELECTRICAL DATA VOLTS	ELECTRICAL DATA BRK. SIZE (AMPS)	OPER. WEIGHT (LBS)	REF. DETAIL (DWG)	REMARKS
EWH-1	CHRONOMITE M-40/208	TANKLESS ELECTRIC	SINK @ WEST LUNCH SHELTER	1.5 @ 50°F RISE	9-5/8	6-1/4	2-3/4	60	110	8,320	208	40	5	5/P6.05	INSTA-FLOW MICRO W/ MICROPROCESSOR. PRE-SET TEMP.: 120°F TO COMPLY WITH HEALTH DEPT.; INSTALL PER MANUFACTURERS INSTRUCTIONS. COORDINATE WITH ELECTRICAL FOR POWER REQUIREMENTS.

PIPING MATERIALS

1.	DRAIN PIPING SEWER WASTE & STORM BELOW GRADE:	CAST IRON "NO-HUB" PIPE CONFORMING TO CISPI 301 AND ASTM A 888 WITH NEOPRENE GASKET AND HEAVY DUTY, SHIELDED, STAINLESS-STEEL 4 OR 6 BAND COUPLINGS. PIPE WRAP ALL UNDERGROUND PIPING. PROVIDE PLASTIC PIPE FROM RECEPTORS COLLECTING DISCHARGE FROM CARBONATED DRINKS. TRANSITION BACK TO CAST-IRON 10 FT. FROM RECEPTOR.
2.	DRAIN PIPING SEWER WASTE & STORM ABOVE GRADE:	CAST IRON "NO-HUB" PIPE CONFORMING TO CISPI 301 AND ASTM A 888 WITH NEOPRENE GASKET AND HEAVY DUTY, SHIELDED, STAINLESS-STEEL 4 OR 6 BAND COUPLINGS.
3.	DRAIN PIPING GREASE WASTE BELOW GRADE:	CAST IRON "NO-HUB" PIPE CONFORMING TO CISPI 301 AND ASTM A 888 WITH NEOPRENE GASKET AND HEAVY DUTY, SHIELDED, STAINLESS-STEEL 4 OR 6 BAND COUPLINGS. PIPE WRAP ALL UNDERGROUND PIPING.
4.	DRAIN PIPING GREASE WASTE ABOVE GRADE:	CAST IRON "NO-HUB" PIPE CONFORMING TO CISPI 301 AND ASTM A 888 WITH NEOPRENE GASKET AND HEAVY DUTY, SHIELDED, STAINLESS-STEEL 4 OR 6 BAND COUPLINGS.
5.	VENT PIPE FOR SEWER / WASTE / GREASE ABOVE GRADE:	CAST IRON "NO-HUB" PIPE CONFORMING TO CISPI 301 AND ASTM A 888 WITH NEOPRENE GASKET AND STANDARD, SHIELDED, STAINLESS-STEEL 2 OR 4 BAND COUPLINGS.
6.	DOMESTIC WATER PIPING BELOW GRADE:	TYPE 'K' COPPER TUBING, HARD DRAWN CONFORMING TO ASTM B 88, WITH WROUGHT COPPER FITTINGS AND LEAD-FREE BRAZED JOINTS. AVOID UNNECESSARY JOINTS BELOW SLAB. PIPE WRAP ALL UNDERGROUND PIPING.
7.	DOMESTIC WATER PIPING ABOVE GRADE:	TYPE 'L' COPPER TUBING, HARD DRAWN CONFORMING TO ASTM B 88, WITH WROUGHT COPPER SOLDER SWEAT FITTINGS AND LEAD FREE-SOLDER JOINTS.
8.	CONDENSATE DRAIN PIPING:	TYPE 'L' COPPER TUBING, HARD DRAWN CONFORMING TO ASTM B 88, WITH WROUGHT COPPER SOLDER SWEAT FITTINGS AND LEAD-FREE SOLDER JOINTS. ALL CONDENSATE DRAIN PIPING WITHIN THE BUILDING SHALL BE INSULATED.
9.	INSULATION OF DOMESTIC HOT WATER AND CONDENSATE DRAIN PIPING:	GLASS FIBER PIPE INSULATION WITH FACTORY-APPLIED JACKET CONFORMING TO ASTM C547. 1-INCH THICK FOR PIPE SIZES 1" & SMALLER. 1½-INCH THICK FOR PIPE SIZES 1¼" INCHES & LARGER. SEAL ALL JOINTS WITH THE FACTORY-APPLIED, SELF-SEAL LAP AND BUTT STRIPS. JOHNS MANVILLE MICRO-LOK 'HP' OR EQUAL.
10.	GAS PIPING:	SCHEDULE 40 BLACK STEEL PIPE CONFORMING TO ASTM A 53 WITH 150 PSIG MALLEABLE IRON THREADED FITTINGS. WELDED JOINTS FOR PIPE SIZES 2½" AND LARGER OR WELDED THROUGHOUT WHEN USED FOR MEDIUM PRESSURE. OUTDOOR PIPING EXPOSED TO ATMOSPHERE SHALL BE GALVANIZED STEEL PIPE OR PAINTED WITH RUST INHIBITING PAINT.
11.	GAS PIPING BELOW GRADE: (EXTERIOR SITE DISTRIBUTION)	POLYETHYLENE PIPE (PE) YELLOW IN COLOR CONFORMING TO ASTM D 2513, SDR-11 AND IAPMO INSTALLATION STANDARD IS-12 WITH PE FITTINGS CONFORMING TO ASTM D-2683, SOCKET-FUSION TYPE OR ASTM D-3261 WITH DIMENSIONS MATCHING PE PIPE. P.E. TRANSITION FITTINGS, FACTORY-FABRICATED FITTINGS WITH PE COMPLYING WITH ASTM D-2513, SDR-11. PROTECTIVE COATING FOR UNDERGROUND PIPING, FACTORY APPLIED, THREE-LAYER COATING OF EPOXY, ADHESIVE AND PE.
12.	PIPE PROTECTION: ALL UNDERGROUND METALLIC PIPE WETHER BURIED OR ENCASED SHALL BE WRAPPED WITH ANTI-CORROSIVE 20 MIL PVC TAPE AND PRIMED OR INSTALLED IN 8 MIL POLYETHYLENE SLEEVE CONFORMING TO ASTM D-1248 AND/OR ANSI/AWWA C105/A21.5.	
13.	PIPE PROTECTION: PROVIDE NON-CONDUCTING DIELECTRIC CONNECTIONS JOINING DISSIMILAR METALS.	
14.	TRACER WIRE: ALL UNDERGROUND PLASTIC PIPE SHALL BE INSTALLED WITH BARE COPPER WIRE, TYPE TW, SIZE AWG#12 PLACED AND SECURED ON TO THE TOP OF THE MAINS AND BRANCHES WITH ALL WIRE TO WIRE CONNECTIONS SOLDERED FOR CONTINUITY.	
15.	QUALITY ASSURANCE: THE PIPING SYSTEMS SHALL BE CONSTRUCTED FROM MATERIALS EXTRUDED AND MOLDED USING THE SAME COMPOUND MANUFACTURER.	
16.	QUALITY ASSURANCE: BOTH THE PIPE AND FITTINGS SHALL BE MANUFACTURED IN NORTH AMERICA AND MEET OR EXCEED THE REQUIREMENTS SET FORTH BY THE AMERICAN SOCIETY FOR TESTING MATERIALS (ASTM) AND ANSI/NSF STANDARDS 14 AND 61.	

FIXTURE SCHEDULE

MARK	FIXTURE	MIN. ROUGH-IN SIZES CW	HW	S OR W	V	FLOW RATE	REMARKS
WC-1	WATER CLOSET (ACCESSIBLE)	1½"	-	4"	2"	1.28 GPF	KOHLER "KINGSTON" MODEL K-4325 WALL MOUNTED TOILET, VITREOUS CHINA, ELONGATED BOWL 1-1/2 TOP SPUD. COMPLETE WITH SLOAN ROYAL "SMOOTH" MODEL 111-1.28 HWS EXPOSED, HARD-WIRED, SENSOR OPERATED FLUSH VALVE @ 1.28 GPF, OLSONITE NO. 95SSCT HEAVY-DUTY ELONGATED OPEN FRONT TOILET SEAT WHITE IN COLOR WITH STAINLESS STEEL BOLT AND MIFAB HORIZONTAL, VERTICAL OR BACK-TO-BACK CLOSET CARRIER. MOUNT AT ACCESSIBLE HEIGHT. (REFER TO ARCHITECTURAL DRAWINGS FOR ACCESSIBLE MOUNTING HEIGHTS). COORDINATE REQUIRED CLEARANCE FOR CARRIER INSTALLATION DURING LAYOUT OF WALL FRAMING.
WC-2	WATER CLOSET	1½"	-	4"	2"	1.28 GPF	SAME AS WC-1 EXCEPT MOUNTED AT STANDARD HEIGHT. (REFER TO ARCHITECTURAL DRAWINGS FOR NON-ACCESSIBLE MOUNTING HEIGHTS).
U-1	URINAL (ACCESSIBLE)	¾"	-	2"	1½"	0.125 GPF	KOHLER "BARDON" MODEL K-4991-ET WALL HUNG, VITREOUS CHINA, 3/4" TOP SPUD. COMPLETE WITH SLOAN ROYAL MODEL 186-0.125 HEU-HWS EXPOSED, HARD-WIRED, SENSOR OPERATED FLUSH VALVE @ 0.125 GPF AND MIFAB MC-31/MC-32 SERIES SUPPORT CARRIER. MOUNT AT ACCESSIBLE HEIGHT. (REFER TO ARCHITECTURAL DRAWINGS FOR ACCESSIBLE MOUNTING HEIGHTS).
U-2	URINAL	¾"	-	2"	1½"	0.125 GPF	SAME AS U-1 EXCEPT MOUNTED AT STANDARD HEIGHT. (REFER TO ARCHITECTURAL DRAWINGS FOR NON-ACCESSIBLE MOUNTING HEIGHTS).
L-1	LAVATORY COUNTER MTD. (ACCESSIBLE)	½"	½"	2"	1½"	0.35 GPM	KOHLER "FARMINGTON" MODEL K-2905-4 DROP-IN, VITREOUS CHINA, 4" CENTERS WITH FRONT OVERFLOW LAVATORY, 19-1/4" x 16-1/4". COMPLETE WITH SLOAN MODEL SF-2400-4-BDM HARD-WIRED, SENSOR OPERATED ELECTRONIC FAUCET @ 0.35 GPM AERATOR, VANDAL RESISTANT, BELOW DECK THERMOSTATIC MIXING VALVE SLOAN MODEL MIX-135, 4" TRIM PLATE, CHICAGO NO. 1017ABCP LOOSE KEY STOPS WITH RIGID SUPPLIES, McGUIRE NO. PW155WC DRAIN, McGUIRE PRE-INSULATED P-TRAP AND McGUIRE PRE-INSULATED FITTINGS.
L-2	LAVATORY COUNTER MTD.	½"	½"	2"	1½"	0.35 GPM	SAME AS L-1 EXCEPT MOUNTED AT STANDARD HEIGHT. (REFER TO ARCHITECTURAL DRAWINGS FOR NON-ACCESSIBLE MOUNTING HEIGHTS).
L-3	LAVATORY WALL MTD. (ACCESSIBLE)	½"	½"	2"	1½"	0.35 GPM	KOHLER "KINGSTON" MODEL K-2005 WALL-MOUNT, VITREOUS CHINA, 4" CENTERS WITH FRONT OVERFLOW, 21-1/4" x 18-1/8". COMPLETE WITH SLOAN MODEL SF-2400-4-BDM HARD-WIRED, SENSOR OPERATED ELECTRONIC FAUCET @ 0.35 GPM AERATOR, VANDAL RESISTANT, BELOW DECK THERMOSTATIC MIXING VALVE SLOAN MODEL MIX-135, 4" TRIM PLATE, CHICAGO NO. 1017ABCP LOOSE KEY STOPS WITH RIGID SUPPLIES, McGUIRE NO. PW155WC DRAIN, McGUIRE PRE-INSULATED P-TRAP, McGUIRE PRE-INSULATED FITTINGS AND MIFAB MC-40/MC-41/MC-42 SERIES SUPPORT CARRIER.
S-1	CLASSROOM SINK (ACCESSIBLE)	½"	½"	2"	1½"	1.5 GPM	JUST SINKS MODEL SL-ADA-1921-A-GR, SINGLE COMPARTMENT, 18 GAUGE, TYPE 304 STAINLESS STEEL, SELF-RIMMING, 21"L x 19"W x 6" DEEP, 3-HOLE CONFIGURATION, REAR-CENTER DRAIN LOCATION. COMPLETE WITH CHICAGO FAUCET MODEL 2300-8E34ABCP LESS HAND SPRAY, JUST MODEL J-35-SSF-VR STAINLESS STEEL FLAT GRID STRAINER, CHICAGO 1006CP LOOSE KEY STOP, WITH RIGID SUPPLIES, CHICAGO 131-CABNF THERMOSTATIC MIXING VALVE FOR SCALD PROTECTION, MCGUIRE NO. PWV8089NCO PRE-WRAPPED P-TRAP. ALL ACCESSIBLE PIPING SHALL BE PRE-WRAPPED. PROVIDE REQUIRED PRE-WRAPPED KITS AS NEEDED.
S-2	HEALTH & WELLNESS SINK	½"	½"	2"	1½"	1.5 GPM	JUST SINKS MODEL SL-ADA-1921-A-GR, SINGLE COMPARTMENT, 18 GAUGE, TYPE 304 STAINLESS STEEL, SELF-RIMMING, 21"L x 19"W x 6" DEEP, SINGLE-HOLE CONFIGURATION, REAR-CENTER DRAIN LOCATION. COMPLETE WITH CHICAGO FAUCET MODEL 116.113.AB.1, ELECTRONIC FAUCET, 1.5 GPM AERATOR, SENSOR ACTIVATED, HARDWIRED, JUST MODEL J-35-SSF-VR STAINLESS STEEL FLAT GRID STRAINER, CHICAGO 1006CP LOOSE KEY STOPS WITH RIGID SUPPLIES, CHICAGO 131-CABNF THERMOSTATIC MIXING VALVE FOR SCALD PROTECTION, MCGUIRE NO. PWV8089NCO PRE-WRAPPED P-TRAP. ALL ACCESSIBLE PIPING SHALL BE PRE-WRAPPED. PROVIDE REQUIRED PRE-WRAPPED KITS AS NEEDED. COORDINATE POWER REQUIREMENTS WITH ELECTRICAL CONTRACTOR.
S-3	REPROGRAPHICS UTILITY SINK (ACCESSIBLE)	½"	½"	2"	1½"	1.5 GPM	JUST SINKS MODEL SL-ADA-2131-16-GR, SINGLE COMPARTMENT, 16 GAUGE ARMOR GROUP, TYPE 304 STAINLESS STEEL, SELF-RIMMING, 30-1/4"L x 20-1/4"W x 5-1/2" DEEP, 4-HOLE CONFIGURATION AND REAR-CENTER DRAIN LOCATION. COORDINATE HOLE LOCATION WITH EYEWASH UNIT (EEW-1). COMPLETE WITH CHICAGO FAUCET MODEL 1100-L9E35-317ABCP, JUST NO. J-35-SSF-VR STAINLESS STEEL FLAT GRID STRAINER, CHICAGO 1006CP LOOSE KEY STOPS WITH RIGID SUPPLIES, CHICAGO 131-CABNF THERMOSTATIC MIXING VALVE FOR SCALD PROTECTION, MCGUIRE NO. PWV8089NCO PRE-WRAPPED P-TRAP. ALL ACCESSIBLE PIPING SHALL BE PRE-WRAPPED. PROVIDE REQUIRED PRE-WRAPPED KITS AS NEEDED.
KS-1	KITCHEN / BREAK RM. SINK - SINGLE BASIN (ACCESSIBLE)	½"	½"	2"	1½"	1.5 GPM	JUST SINKS MODEL SL-ADA-1921-A-GR, SINGLE COMPARTMENT, 18 GAUGE, TYPE 304 STAINLESS STEEL, SELF-RIMMING, 21"L x 19"W x 6" DEEP, 4-HOLE CONFIGURATION, REAR-CENTER DRAIN LOCATION. COMPLETE WITH CHICAGO FAUCET MODEL 2301-8E34ABCP W/ SIDE HAND SPRAY, JUST MODEL JB-99 S.S. BASKET STRAINER, CHICAGO 1006CP LOOSE KEY STOPS, CHICAGO 131-CABNF THERMOSTATIC MIXING VALVE FOR SCALD PROTECTION, MCGUIRE NO. PWV8089NCO PRE-WRAPPED P-TRAP. ALL ACCESSIBLE PIPING SHALL BE PRE-WRAPPED. PROVIDE REQUIRED PRE-WRAPPED KITS AS NEEDED.
KS-2	KITCHEN / BREAK RM. SINK - DUAL BASIN (ACCESSIBLE)	½"	½"	2"	1½"	1.5 GPM	JUST SINKS MODEL DL-ADA-1933-A-GR, DOUBLE COMPARTMENT, 18 GAUGE, TYPE 304 STAINLESS STEEL, SELF-RIMMING, 33"L x 19"W x 6" DEEP, 4-HOLE CONFIGURATION, REAR-CENTER DRAIN LOCATION. COMPLETE WITH CHICAGO FAUCET MODEL 2301-8E34ABCP W/ SIDE HAND SPRAY, JUST MODEL JB-99 S.S. BASKET STRAINER, CHICAGO 1006CP LOOSE KEY STOPS, CHICAGO 131-CABNF THERMOSTATIC MIXING VALVE FOR SCALD PROTECTION, MCGUIRE NO. PWV8089NCO PRE-WRAPPED P-TRAP. ALL ACCESSIBLE PIPING SHALL BE PRE-WRAPPED. PROVIDE REQUIRED PRE-WRAPPED KITS AS NEEDED. PROVIDE IN-SINKERATOR "EVOLUTION SERIES" COMPACT MODEL GARBAGE DISPOSER WITH WALL SWITCH AND SINK ADAPTER. COORDINATE POWER REQUIREMENTS WITH ELECTRICAL CONTRACTOR: 3/4 H.P., 1725 RPM, 120V, 1PH, 9.2 AMPS, 60HZ.
EEW-1	EMERGENCY EYE WASH COUNTER MTD. (ACCESSIBLE)	½"	-	-	-		GUARDIAN MODEL GBF1849 BARRIER-FREE DECK-MOUNTED EYEWASH WITH 90 DEG. SWING-DOWN. COORDINATE LEFT/RIGHT HAND CONFIGURATION IN FIELD. PROVIDE AN INDIVIDUAL COLD WATER SUPPLY TEE. COMPLETE WITH T&S B-1350 ANGLE LOOSE KEY STOP WITH 1/2" NPT FEMALE INLET, 1/2" NPT MALE OUTLET, 2" ADJUSTABLE FLANGE AND CONNECTION FROM STOP TO EYEWASH UNIT.
MS-1	MOP SINK (FLR., CORNER MTD.)	¾"	¾"	3"	2"	2.2 GPM	KOHLER "WHITBY" MODEL K-6710 FLOOR CORNER SERVICE SINK WITH MODEL K-8940 REMOVABLE VINYL RIM GUARD AND GRID STRAINER. COMPLETE WITH CHICAGO FAUCET MODEL 540-LD897-SCP WALL MOUNTED FAUCET WITH ATMOSPHERIC VACUUM BREAKER, SPOUT WITH PAIL HOOK, WALL BRACE, STAINLESS STEEL MOP HANGER BRACKET, STERN WILLIAMS MODEL T-35 HEAVY DUTY HOSE (36" LONG) W/ WALL BRACE AND STERN WILLIAMS MODEL BP-1-28 STAINLESS STEEL SPLASH GUARD PANELS.
DF-1	DRINKING FOUNTAIN W/ BOTTLE FILLER (INTERIOR LOCATIONS) (ACCESSIBLE)	½"	-	2"	1½"		ELKAY MODEL EZSTL8WS EZH20 BI-LEVEL WALL MOUNTED DRINKING FOUNTAIN WITH BOTTLE FILLING STATION, FILTERED AND WITH 8.0 GPH CHILLED WATER OUTPUT. COMPLETE WITH MOUNTING SUPPORT BRACKET, WASTE STRAINER AND STAINLESS STEEL ACCESS PANEL. INSTALL BOTTLE FILLER PORTION ON LOW (ADA) SIDE OF THE DRINKING FOUNTAIN FOR FULL ADA COMPLIANCE. COORDINATE POWER REQUIREMENTS WITH ELECTRICAL CONTRACTOR. (115V / 60HZ / F.L.A.:5.0 / RATED WATTS: 370).
DF-2 (ALT. 2)	DRINKING FOUNTAIN W/ BOTTLE FILLER (EXTERIOR LOCATIONS) (ACCESSIBLE)	½"	-	2"	1½"		ELKAY MODEL EZSTL8WS-VR EZH20 BI-LEVEL WALL MOUNTED DRINKING FOUNTAIN WITH BOTTLE FILLING STATION, NON-FILTERED AND WITH 8.0 GPH CHILLED WATER OUTPUT. COMPLETE WITH MOUNTING SUPPORT BRACKET, WASTE STRAINER AND STAINLESS STEEL ACCESS PANEL. INSTALL BOTTLE FILLER PORTION ON LOW (ADA) SIDE OF THE DRINKING FOUNTAIN FOR FULL ADA COMPLIANCE. COORDINATE POWER REQUIREMENTS WITH ELECTRICAL CONTRACTOR. (115V / 60HZ / F.L.A.:5.0 / RATED WATTS: 370).
AD-1	AREA DRAIN	-	-	2"/3" SD	-		WATTS MODEL FD-330-Y-1-6. EPOXY COATED CAST IRON 8" x 8" FIXED TOP DRAIN AND FLASHING COLLAR. PROVIDE WITH NICKEL BRONZE TOP GRATE, HEEL PROOF RATED FOR FOOT TRAFFIC WITH 1/2" MAX. GRATE OPENINGS IN ALL DIRECTIONS.
RD-1	ROOF DRAIN	SEE PLANS FOR SIZES					WATTS MODEL RD-100. COMPLETE WITH CAST IRON FLASHING CLAMP, GALVANIZED METAL DOME, STRAINER AND SUMP RECEIVER. PROVIDE WALL CLEANOUTS AT BUILDING EXTERIOR. COVERS SHALL BE PAINTED WITH CUSTOM COLOR TO MATCH THE METAL PANEL WALL SYSTEM OR WALL COLOR.
OD-1	OVERFLOW DRAIN	SEE PLANS FOR SIZES					WATTS MODEL RD-100-R. COMPLETE WITH CAST IRON FLASHING CLAMP, GALVANIZED METAL DOME STRAINER, SUMP RECEIVER AND 2" HIGH WATER DAM. PROVIDE WITH DOWNSPOUT NOZZLE (DS-1) AND CONCRETE SPLASH GUARDS WHERE OD OUTLETS TERMINATE TO PAVED AREAS. COORDINATE WITH LANDSCAPE DWGS.
DS-1	DOWNSPOUT NOZZLE	SEE PLANS FOR SIZES					WATTS MODEL RD-950 WITH HINGED PERFORATED STAINLESS STEEL COVER, VANDAL PROOF AND FLUSH MOUNTED DESIGN AT EVERY TERMINATION THRU WALL SPILLING TO GRADE. COORDINATE INSTALLATION OF OUTLETS ACCORDINGLY WITH ARCHITECTURAL DETAILS 20/A9.41, 28/A9.41 AND 30/A9.41.
TD-1	TRENCH DRAIN (BALCONIES)	SEE PLANS FOR SIZES					ACO DRAIN "SLABDRAIN" SERIES H100-8 CHANNEL SYSTEM; 5.10" WIDE, 3.15" DEEP, 40" SECTIONS, NON-SLOPED. COMPLETE WITH MEMBRANEDRAIN STAINLESS STEEL EDGE RAIL SUBFRAME MODEL 96913 AND KLASSIKDRAIN K100 STAINLESS STEEL DECORATIVE GRATE, CLASS 'A'. PROVIDE NO-HUB OUTLETS, CLOSED END CAP FITTINGS AND GRATE HARDWARE AS REQUIRED. COORDINATE LENGTH OF TRENCH WITH FLOOR PLANS.
RR-1	ROOF RECEPTOR	-	-	2"	1½"		WATTS MODEL RD-400-NH-D EPOXY COATED CAST IRON ROOF DECK CONDENSATE RECEPTOR DRAIN WITH ANCHOR FLANGE, CAST IRON WATERPROOFING MEMBRANE CLAMP RING WITH INTEGRAL GRAVEL STOP, INTERNAL DOME STRAINER, VANDAL PROOF DOME AND ACID RESISTANT EPOXY COATING. REFER TO DETAIL 3/P6.03
FD-1	FLOOR DRAIN	½"	-	2"	1½"		WATTS MODEL FD-1100-L EPOXY COATED CAST IRON DRAIN WITH SQUARE NICKEL-BRONZE HEEL-PROOF TOP, STAINLESS STEEL STRAINER, CLAMPING COLLAR, TRAP PRIMER CONNECTION AND P-TRAP. REFER TO DETAIL 1/P6.01.
FS-1	FLOOR SINK	½"	-	2" / 3"	1½" / 2"		WATTS MODEL FS-740. COMPLETE WITH DEEP CAST IRON DRAIN, ACID-RESISTANT PORCELAIN ENAMEL COATED INTERIOR, STAINLESS STEEL FRAME/GRATE, HALF GRATE, TRAP PRIMER CONNECTION AND P-TRAP. DIMENSIONS: 12" x 12" x 6" DEEP. REFER TO DETAIL 4/P6.04.
WB-1	WATER BOX	½"	-	-	-		IPS CORPORATION MODEL MIB1AB WHITE POWDER COATED STEEL OUTLET BOX, 1/4" TURN VALVED AND 1/2" SWEAT CONNECTION. INSTALL AT 48" A.F.F. BEHIND FRIDGE. PROVIDE SUPPLY TUBING LINES FROM WATER BOX TO FRIDGE AND ICE MAKER. COORDINATE WITH ARCHITECTURAL FOR EXACT LOCATION OF APPLIANCE.
TP-1	TRAP PRIMER ELECTRONIC TYPE (SINGLE)	½"	-	-	-		PPP MINI-PRIME MPB-500, HARDWIRED OPERATED IN RECESSED BOX WITH STAINLESS STEEL COVER. COMPLETE WITH 1/2" COPPER TYPE "L" PIPE TO RECEPTOR. PROVIDE DISTRIBUTION UNIT AS REQUIRED. ROUGH-IN DIMENSIONS: 12" x 12" x 4" DEEP. COORDINATE POWER REQUIREMENTS WITH ELECTRICAL CONTRACTOR (115V/60HZ/1PH).
TP-2	TRAP PRIMER VACUUM BREAKER TYPE	½"	-	-	-		PROVIDE WITH WC-/WC-2 FLUSH VALVE MANUFACTURER VACUUM BREAKER OPTION COMPLETE WITH 1/2" COPPER TYPE "L" PIPE TO RECEPTOR. REFER TO DETAIL 2/P6.01.
TP-3	TRAP PRIMER ELECTRONIC TYPE (MANIFOLD)	½"	-	-	-		P.P.P. PRIME-TIME MODEL PT-10, TEN OPENING MANIFOLD, HARDWIRED OPERATED IN RECESSED BOX WITH STAINLESS STEEL COVER. COMPLETE WITH ATMOSPHERIC VACUUM BREAKER, PRESET 24 HOUR CLOCK, 120V SOLENOID VALVE AND COMPRESSION FITTINGS: 5/8" COMPRESSION FOR 1/2" COPPER TYPE "L" LINE TO RECEPTOR. ROUGH-IN DIMENSIONS: 14" x 16" x 4" DEEP. COORDINATE POWER REQUIREMENTS WITH ELECTRICAL CONTRACTOR (120V/60HZ/1PH).
TP-4	TRAP PRIMER ELECTRONIC TYPE (MANIFOLD)	½"	-	-	-		P.P.P. PRIME-TIME MODEL PTS-4, FOUR OPENING MANIFOLD, HARDWIRED OPERATED IN SURFACE MOUNT BOX WITH NEMA-1 COVER PLATE. COMPLETE WITH ATMOSPHERIC VACUUM BREAKER, PRESET 24 HOUR CLOCK, 120V SOLENOID VALVE AND COMPRESSION FITTINGS: 5/8" COMPRESSION FOR 1/2" COPPER TYPE "L" LINE TO RECEPTOR. ROUGH-IN DIMENSIONS: 14" x 16" x 4" DEEP. COORDINATE POWER REQUIREMENTS WITH ELECTRICAL CONTRACTOR (120V/60HZ/1PH).
HB-1	HOSE BIBB	¾"	-	-	-		WOODFORD MODEL B24, RECESSED WALL MOUNTED HOSE BOX WITH WALL FLANGE AND VACUUM BREAKER. CARTRIDGE-OPERATED TYPE WITH VANDAL-RESISTANT LOCKSHIELD, REMOVABLE LOOSE KEY WHEEL HANDLE AND SCREWDRIVER OPERATED STOP. REFER TO DETAIL 3/P6.01.
HB-2	HOSE BIBB (ON ROOF)	1"	-	-	-		WOODFORD MODEL RHMC-MS MILD CLIMATE ROOF HYDRANT WITH MOUNTING SYSTEM, HOSE CONNECTION BACKFLOW PREVENTER AND MODEL 50HF 3/4" HOSE CONNECTION. REFER TO DETAIL 4/P6.05.
HB-3	HOSE BIBB (FOX DRAIN SYSTEM)	¾"	-	-	-		WOODFORD MODEL 24C, COPPER TUBE CONNECTION: 3/4", INVERTED NOSE WITH VACUUM BREAKER HOSE VALVE. CARTRIDGE OPERATED TYPE, REMOVABLE LOOSE KEY WHEEL HANDLE AND VANDAL RESISTANT LOCKSHIELD BONNET. ROUGH-CHROME PLATED BODY. REFER TO DETAIL 3/P6.04.
HB-4	HOSE BIBB (MECH. RM.)	¾"	-	-	-		ACORN NO. 8126CP-LF, INVERTED NOSE WITH VACUUM BREAKER HOSE VALVE CARTRIDGE OPERATED TYPE, REMOVABLE LOOSE KEY WHEEL HANDLE AND VANDAL RESISTANT LOCKSHIELD BONNET. POLISHED CHROME PLATED BODY.
BFP-1	BACKFLOW PREVENTER (MECH. & TRASH RMS.)	1"	-	-	-		WILKINS 975-XLSU PRESSURE TYPE BACKFLOW PREVENTER WITH TWO FULL PORT RESILIENT SEATED BALL VALVES FOR SHUT-OFF AND FOUR RESILIENT BALL VALVE TEST COCKS, "Y" STRAINER, UNION CONNECTIONS BETWEEN SHUT-OFF VALVES AND BRONZE BODY CONSTRUCTION. PROVIDE AIR GAP FITTING AND SPILL INDIRECT WASTE TO NEAREST FLOOR SINK OR ROOF RECEPTOR. REFER TO DETAIL 5/P6.04.
FCO-1	FLOOR CLEANOUT	-	-	SEE PLANS	-		WATTS MODEL CO-200-S-6 EPOXY COATED CAST IRON CLEANOUT WITH SQUARE NICKEL BRONZE TOP AND VANDAL PROOF SCREWS. REFER TO DETAIL 5/P6.01.
WCO-1	WALL CLEANOUT	-	-	SEE PLANS	-		WATTS MODEL CO-590-RD THREADED BRASS CLEANOUT PLUG WITH COUNTERSUNK HEAD, STAINLESS STEEL ACCESS COVER AND VANDAL PROOF STAINLESS STEEL SCREW. WATTS MODEL CO-460-RD FOR STACK CLEANOUT APPLICATIONS. REFER TO DETAIL 4/P6.01.
WHA-1	WATER HAMMER ARRESTOR	SEE PLANS	-	-	-		WATTS "SS" SERIES, STAINLESS STEEL BELLOWS OPERATED TYPE WATER HAMMER ARRESTORS. INSTALLATION AND SIZING SHALL CONFORM TO PDI WH-201 STANDARD. PROVIDE BEHIND ACCESS PANELS WHERE REQUIRED.
WM-1	WATER METER (BLDG. MONITORING)	3"	-	-	-		SENSUS "OMNI C2S" MODEL WDS-10000-01. MIN. FLOW: 0.25 GPM. FLOW RANGE @ 4.3 PSI = 160 GPM. MAXIMUM OPERATING PRESSURE 200 PSI; AWWA CLASS 125 OVAL BOLT FLANGE; FULLY ELECTRONIC SEALED REGISTER WITH PROGRAMMABLE REGISTER; 304 STAINLESS STEEL MAINCASE; STAINLESS STEEL STRAINER SCREEN AND STRAINER COVER. SIZE: 2". PROVIDE ALL REQUIRED DEVICES/COMPONENTS TO INTERFACE WITH BUILDING ENERGY MANAGEMENT SYSTEM. COORDINATE WITH CONTROLS CONTRACTOR. REF. TO DTL. 1/P6.02.
GM-1	SUB-GAS METER (BLDG. MONITORING)	-	-	-	-		SIERRA INSTRUMENTS MODEL 620S SERIES COMPLETE WITH 0-10VDC LINEAR OUTPUT SIGNAL, DIGITAL DISPLAY, MODBUS DIGITAL COMMUNICATION. SIZE SAME AS PIPE. WIRING TO BE INSTALLED BY CONTROLS CONTRACTOR. COORDINATE WITH CONTROLS CONTRACTOR FOR CONNECTION OF METER TO BMS FOR DATA TRANSFER. REF. TO DTL. 3/P6.02.
GPR-1	GAS PRESSURE REGULATOR	-	-	-	-		AMERICAN METER MODEL 1843. PROVIDE WITH OPSO (OVERPRESSURE SHUTOFF) OPERATION AND FOR OUTDOOR INSTALLATION. FIELD VERIFY ASSEMBLY (VALVE HEAD) POSITION. REGULATOR SIZE: 2". ORIFICE SIZE: 1". SPRING PART NO. 71424P019. SPRING RANGE: 8.5" TO 14" W.C. REFER TO DETAIL 3/P6.02.
GPR-2	GAS PRESSURE REGULATOR @ BOILER	-	-	-	-		MAXITROL MODEL RV81 (003617F), REGULATOR SIZE: 1-1/4". ORIFICE SIZE: 1". SPRING PRESSURE RANGE: 7" W.C. TO 10.5" W.C MAX. INSTALL REGULATOR WITHIN 10 PIPE DIAMETERS OF BOILER PER MANUFACTURERS INSTRUCTIONS.
EQV-1	EARTHQUAKE VALVE (AUTOMATIC SHUT-OFF)	-	-	-	-		PACIFIC SEISMIC PRODUCTS MODEL 316. THREADED HORIZONTAL, MEETS STANDARD 12-12-1, ASCE STANDARD 25-06 AND ANSI Z21.21,2012 FOR EARTHQUAKE ACTUATED AUTOMATIC GAS SHUT-OFF SYSTEMS. CA, DSA #:13-12.
FXD-1	FOX DRAIN SYSTEM	-	-	-	-		FOX ENVIRONMENTAL SYSTEMS MODEL DD600S, WASHDOWN DEMAND DRIVEN DIVERSION SYSTEM. REFER TO DETAIL 3/P6.04.
AGF-1	AIR GAP FITTING	½"	-	2"	1½"		MIFAB MODEL MI-CAG-20NH CAST IRON FIXED AIR GAP WITH SLIP-JOINT INLET AND NO-HUB OUTLET CONNECTION. REFER TO DETAIL 6/P6.03.
SJ-1	SEISMIC JOINT (WATER)	SEE PLANS	-	-	-		METRAFLEX MODEL MLS80250 WATER METRALOOP WITH SWEAT ENDS, NSF 372 - LEAD-FREE. APPROXIMATE DIMENSIONS: 26-1/2" LENGTH AND 17" END TO END. WEIGHT: 18 LBS. SIZE: RANGES FROM 3/4" - 2-1/2" - SEE PLANS, MOVEMENT: ±4". REFER TO DETAIL 1/P6.03.
SJ-2	SEISMIC JOINT (GAS)	SEE PLANS	-	-	-		METRAFLEX MODEL MLACT4125 GAS METRALOOP WITH THREADED ENDS, AGA/CSA RATED.APPROXIMATE DIMENSIONS: 22" LENGTH AND 16-3/4" END TO END. WEIGHT: 17 LBS. SIZE: 1-1/4", MOVEMENT: ±4". REFER TO DETAIL 1/P6.03.
VTR-1	VENT CAP	SEE PLANS	-	-	-		WATTS MODEL RD-680-VC EPOXY COATED CAST IRON VENT CAP WITH VANDAL PROOF COVER. PROVIDE AT ALL VENT THRU ROOF PENETRATIONS. REFER TO DETAIL 6/P6.01.
HS-1 (ALT. 2)	HAND SINK (WEST LUNCH SHELTER)	½"	½"	-	-		ADVANCED TABCO MODEL 7-PS-68 WALL MOUNTED HAND SINK WITH 4" O.C. SPLASH MOUNTED GOOSENECK FAUCET WITH WRIST BLADE HANDLES, 20 GAUGE, TYPE 304 STAINLESS STEEL. OVERALL DIMENSIONS: 17.25"L x15.25"W x 13"D (5" DEEP BASIN). COMPLETE WITH CHICAGO #1025-ABCP LOOSE KEY ANGLE STOPS, MCGUIRE NO. PW111C16G17 PRE-WRAPPED WASTE AND MCGUIRE NO. PWV8089NCO PRE-WRAPPED P-TRAP. ALL ACCESSIBLE PIPING SHALL BE PRE-WRAPPED. PROVIDE REQUIRED PRE-WRAPPED KIT AS NEEDED. PROVIDE BELOW DECK THERMOSTATIC MIXING VALVE SLOAN MODEL MIX-135.

NOTES:

A. ALL FIXTURES SHALL BE PROVIDED WITH MINIMUM ROUGH-IN CONNECTIONS AS INDICATED IN THIS SCHEDULE OR PER MANUFACTURERS RECOMMENDATIONS. THE PLUMBING CONTRACTOR SHALL RUN ALL SERVICE LINES, ROUGH-IN AND MAKE FINAL CONNECTIONS TO ALL FIXTURES. PLUMBING CONTRACTOR SHALL FURNISH AND INSTALL ALL TRIMS, FLUSH VALVES, TAILPIECES, STRAINERS, P-TRAPS, TRAP ARMS, HOT & COLD WATER STOPS AND FAUCETS AS REQUIRED.
B. ALL FIXTURES AND/OR COMPONENTS AS PART OF THE PLUMBING SYSTEM SHALL BE INSTALLED IN STRICT COMPLIANCE WITH THE MANUFACTURER'S WRITTEN INSTRUCTIONS.
C. ELECTRICAL TRANSFORMERS FOR FAUCETS/FLUSH VALVES TO BE LOCATED BEHIND ACCESS PANELS. MINIMUM ACCESS PANEL SIZE 14" x 14".
D. OPENINGS IN GRATINGS OR STRAINERS LOCATED IN PEDESTRIAN WAYS OR IN PATH OF TRAVEL (P.O.T.) SHALL NOT ALLOW PASSAGES OF A SPHERE MORE THAN 1/2" DIAMETER. ELONGATED OPENINGS SHALL BE PLACED SO THAT LONG DIMENSION IS PERPENDICULAR TO THE DOMINANT DIRECTION OF TRAVEL IN COMPLIANCE WITH SECTION 11B-302.3.

architecture
www.hpiarchitecture.com
115 22nd street
Newport Beach, CA 92663
o: 949. 675. 6442

CONSULTANTS
P2S ENG
Long Beach | Los Angeles
San Diego San Jose
p2sinc.com

REGISTERED PROFESSIONAL ENGINEER CHRISTOPHER J. WEITZEL No. M27619 EXP. 06/30/19 MECHANICAL STATE OF CALIFORNIA
SIGNED: 08/06/18

SEALS / APPROVALS

LICENSED ARCHITECT LAWRENCE A. FRAPWELL NO. C 11360 Ren 6-30-19 STATE OF CALIFORNIA

IDENTIFICATION STAMP
DIV. OF THE STATE ARCHITECT
FILE: 30-C2
A# 04-116810
AC ________ FLS ________ SS ________
DATE ________________

PROJECT TITLE
JOHNSON STUDENT CENTER
INCREMENT 2
1530 W 17TH ST SANTA ANA CA 92706

RANCHO SANTIAGO
Community College District

SUBMITTALS		
#	DATE	DESCRIPTION
	05/18/18	HEALTH DEPT. SUBMITTAL
	08/13/18	DSA FINAL SUBMITTAL
	09/24/18	ADDENDUM #3
	10/08/18	ADDENDUM #5
	10/15/18	ADDENDUM #6
	10/22/18	ADDENDUM #8

PROJECT IDENTIFICATION 7411
THESE DRAWINGS ORIGINALLY CREATED IN AUTODESK REVIT V. 2016
THE ORIGINAL SIZE OF THIS SHEET IS 30" X 42".

DRAWN BY M Alcantara

CHECKED BY E Gomez

THESE DRAWINGS AND SPECIFICATIONS ARE THE PROPERTY AND COPYRIGHT OF THE ARCHITECT AND SHALL NOT BE USED ON ANY OTHER PROJECT OR LOCATIONS EXCEPT AS DESCRIBED ON THE DRAWINGS, WITHOUT WRITTEN AGREEMENT WITH THE ARCHITECT.
© HILL PARTNERSHIP INC. 2015

SHEET TITLE
SCHEDULES

SHEET NUMBER
P0.02

100% CONSTRUCTION DOCUMENTS

10/16/2018 6:55:04 PM C:\Users\Eric Gomez\Documents\7411_R16_MEPFA_Central_Eric Gomez.rvt

NOTES

1. FOR CONTINUATION REFER TO PLUMBING SITE PLAN SHEET P1.01.
2. OVERFLOW DRAIN DISCHARGE TO GRADE. TERMINATE THROUGH WALL WITH DOWNSPOUT NOZZLE (DS-1) @ 18" A.F.F.
3. PROVIDE 3/4" CW DOWN IN WALL WITH FULL-PORT SHUT-OFF VAVLE BEHIND ACCESS PANEL TO SERVE HOSE BIBB (HB-1). REFER TO DETAIL 3/P6.01.
4. PROVIDE 4" S DOWN, 2" V UP, 1-1/2" CW TO SERVE WATER CLOSET (WC-1).
5. PROVIDE 2" S DOWN, 1-1/2" V UP, 1/2" CW & 1/2" HW TO SERVE LAVATORY (L-3).
6. PROVIDE 2" S DOWN, 1-1/2" V UP, 1/2" CW & 1/2" HW TO SERVE SINK (S-1, S-3/S-3).
7. PROVIDE 2" S DOWN, 1-1/2" V UP, 1/2" CW & 1/2" HW TO SERVE KITCHEN SINK (KS-2).
8. PROVIDE 3" S DOWN, 2" V UP, 3/4" CW & 3/4" HW TO SERVE MOP SINK (MS-1). PROVIDE FULL-PORT SHUT-OFF VALVES BEHIND ACCESS PANEL.
9. PROVIDE 1-1/2" CW DOWN IN WALL TO FULL SIZE HEADER AND 1/2" HW DOWN IN WALL TO SERVE LAVATORY (L-3). PROVIDE FULL-PORT SHUT-OFF VALVES BEHIND ACCESS.
10. HUB DRAIN FOR FIRE SPRINKLER SYSTEM DISCHARGE. REFER TO DETAIL 5/P6.02.
11. ROUTE 3/4" CD DOWN IN WALL TO LAVATORY TAILPIECE PIPE CONNECTOR. REFER TO DETAIL 4/P6.03.
12. PROVIDE WATER HAMMER ARRESTOR (WHA-1) BEHIND ACCESS PANEL.
13. PROVIDE 1/2" CW DOWN IN WALL TO SERVE WATER BOX (WB-1). PROVIDE SUPPLY TUBING LINES FROM WATER BOX TO REFRIDGERATOR(S) AND ICE MAKER(S).
14. PROVIDE 2" S DOWN AND 1-1/2" V UP TO SERVE FLOOR DRAIN (FD-1). ROUTE 1/2" TP BELOW FLOOR FROM TRAP PRIMER ASSEMBLY. REFER TO DETAIL 1 & 2 ON P6.01.
15. MECHANICAL EQUIPMENT (NOT IN PLUMBING SCOPE) REFER TO MECHANICAL DRAWINGS FOR UNIT DESCRIPTION AND INFORMATION.
16. ROUTE 3/4"CD FROM CONDENSATE PUMPS OUTLET AND RUN ABOVE CEILING TOWARDS RECEPTOR WITH 1% MIN. SLOPE. CONDENSATE PUMP SHALL BE FURNISHED BY MECHANICAL CONTRACTOR, INSTALLED BY PLUMBING CONTRACTOR AND WIRED BY ELECTRICAL CONTRATOR. AVOID RUNNING OVER ELECTRICAL AND TELECOM ROOMS. REFER TO DETAIL 5/P6.03.
17. PROVIDE 1/2" CW TO SERVE ELECTRONIC TRAP PRIMER (TP-1).

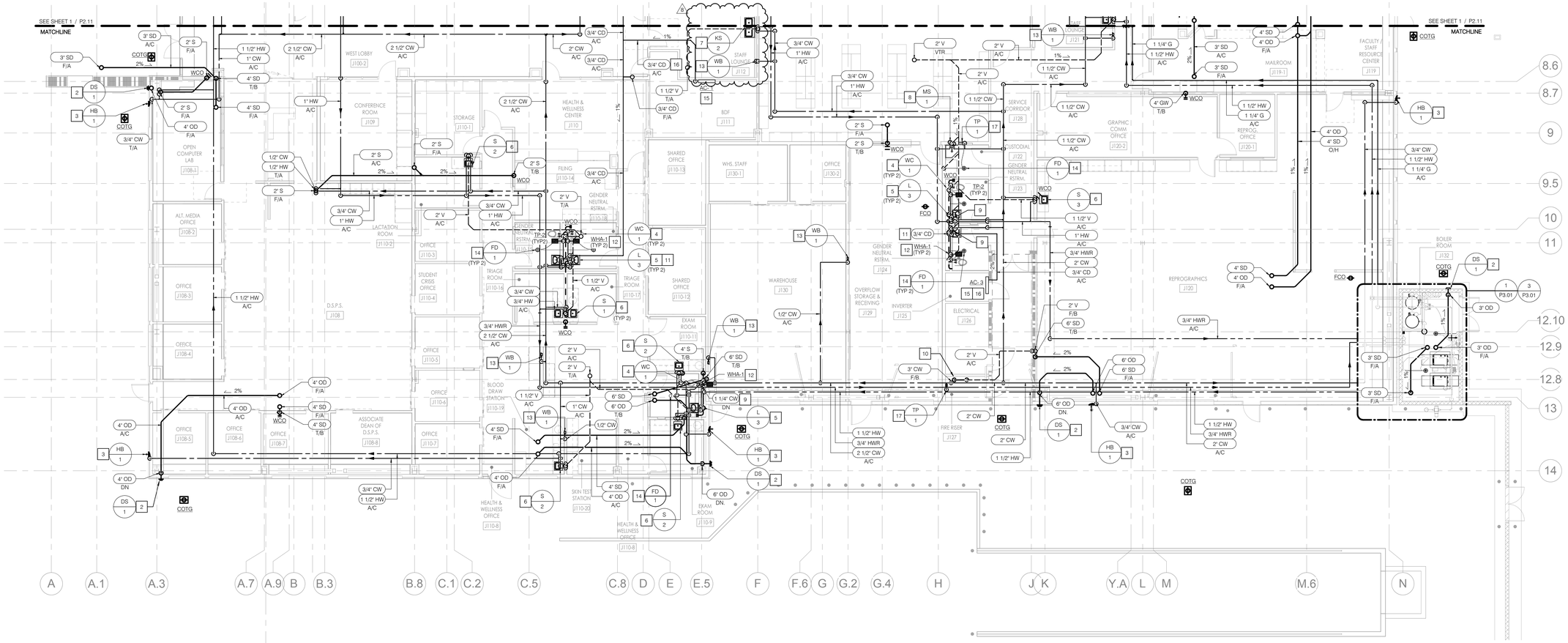

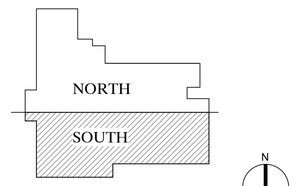

FIRST FLOOR PLAN - SOUTH

SCALE 1/8" = 1'-0" 1

P2S: 7411

hpi architecture
www.hpiarchitecture.com
115 22nd street
Newport Beach, CA 92663
o: 949. 675. 6442

CONSULTANTS
P2S ENG
Long Beach | Los Angeles
San Diego San Jose
p2sinc.com

REGISTERED PROFESSIONAL ENGINEER — CHRISTOPHER J. WEBB — No. M28518 Exp 06/30/19 — MECHANICAL — STATE OF CALIFORNIA — SIGNED: 08/06/18

SEALS / APPROVALS

LICENSED ARCHITECT — EDWARD J. GOMEZ — No. C-30119 — STATE OF CALIFORNIA

IDENTIFICATION STAMP
DIV. OF THE STATE ARCHITECT
FILE: 30-C2
A# 04-116810
AC _____ FLS _____ SS _____
DATE _____

PROJECT TITLE
JOHNSON STUDENT CENTER
INCREMENT 2
1530 W 17TH ST SANTA ANA CA 92706

RANCHO SANTIAGO Community College District

SUBMITTALS		
#	DATE	DESCRIPTION
	05/18/18	HEALTH DEPT. SUBMITTAL
	08/13/18	DSA FINAL SUBMITTAL
3	09/24/18	ADDENDUM 3
	10/08/18	ADDENDUM #5
	10/15/18	ADDENDUM #6
	10/22/18	ADDENDUM #8

PROJECT IDENTIFICATION 7411

THESE DRAWINGS ORIGINALLY CREATED IN AUTODESK REVIT V. 2016

THE ORIGINAL SIZE OF THIS SHEET IS 30" X 42".

DRAWN BY M.Alcantara

CHECKED BY E.Gomez

THESE DRAWINGS AND SPECIFICATIONS ARE THE PROPERTY AND COPYRIGHT OF THE ARCHITECT AND SHALL NOT BE USED ON ANY OTHER PROJECT OR LOCATIONS EXCEPT AS DESCRIBED ON THE DRAWINGS, WITHOUT WRITTEN AGREEMENT WITH THE ARCHITECT.

© HILL PARTNERSHIP INC. 2015

SHEET TITLE
FIRST FLOOR PLAN - SOUTH

SHEET NUMBER
P2.12

100% CONSTRUCTION DOCUMENTS

10/16/2018 6:55:58 PM C:\Users\Eric Gomez\Documents\7411_R16_MEPFA_Central_Eric Gomez.rvt

GENERAL NOTES

1. FOR ROOF DRAIN/OVERFLOW DRAIN INSTALLATION REFER TO ARCHITECTURAL DETAILS 1/A9.30 & 2/A9.30.
2. FOR VENT PIPE FLASHING AND PIPE FLASHING THROUGH ROOF REFER TO ARCHITECTURAL DETAILS 3/A9.30 & 8/A9.30.
3. ROOF DRAINAGE IS BASED ON 3"/HR RAINFALL RATE.

NOTES

1. PROVIDE 2"S DOWN, 1-1/2"V UP AND 1/2" CW/HW FROM BELOW IN WALL WITH FULL-PORT SHUT-OFF VALVES BEHIND ACCESS PANEL TO SERVE SINK (S-1).
2. PROVIDE 2"S DOWN, 1-1/2"V UP AND 1/2" CW/HW FROM BELOW IN WALL WITH FULL-PORT SHUT-OFF VALVES BEHIND ACCESS PANEL TO SERVE KITCHEN SINK (KS-2). (8)
3. MECHANICAL EQUIPMENT (NOT IN PLUMBING SCOPE) REFER TO MECHANICAL DRAWINGS FOR UNIT DESCRIPTION AND INFORMATION.
4. ROUTE 3/4"CD FROM CONDENSATE PUMPS OUTLET AND RUN ABOVE CEILING TOWARDS RECEPTOR WITH 1% MIN. SLOPE. CONDENSATE PUMP SHALL BE FURNISHED BY MECHANICAL CONTRACTOR, INSTALLED Y PLUMBING CONTRACTOR AND WIRED BY ELECTRICAL CONTRATOR. REFER TO DETAIL 5/P6.03.
5. 2" WASTE FROM ABOVE SERVING ROOF RECEPTOR (RR-1).
6. VENT THROUGH ROOF. REFER TO DETAIL 6/P6.01.
7. INTAKE AND EXHAUST VENT PIPES THRU ROOF. SIZE 3" PVC. PROVIDE CONCENTRIC VENT KIT TERMINATION FITTING BRADFORD MODEL 239-440609-01 FOR A SINGLE ROOF PENETRATION PER DETAIL 2/P6.04.
8. PROVIDE TRENCH DRAIN CHANNELS AT EDGE OF BALCONY. COORDINATE EXACT LENGTH WITH ARCHITECTURAL DRAWING 13/A6.10. REFER TO P2.12 FOR DRAIN OUTLET LOCATIONS FROM DRAIN CHANNELS.

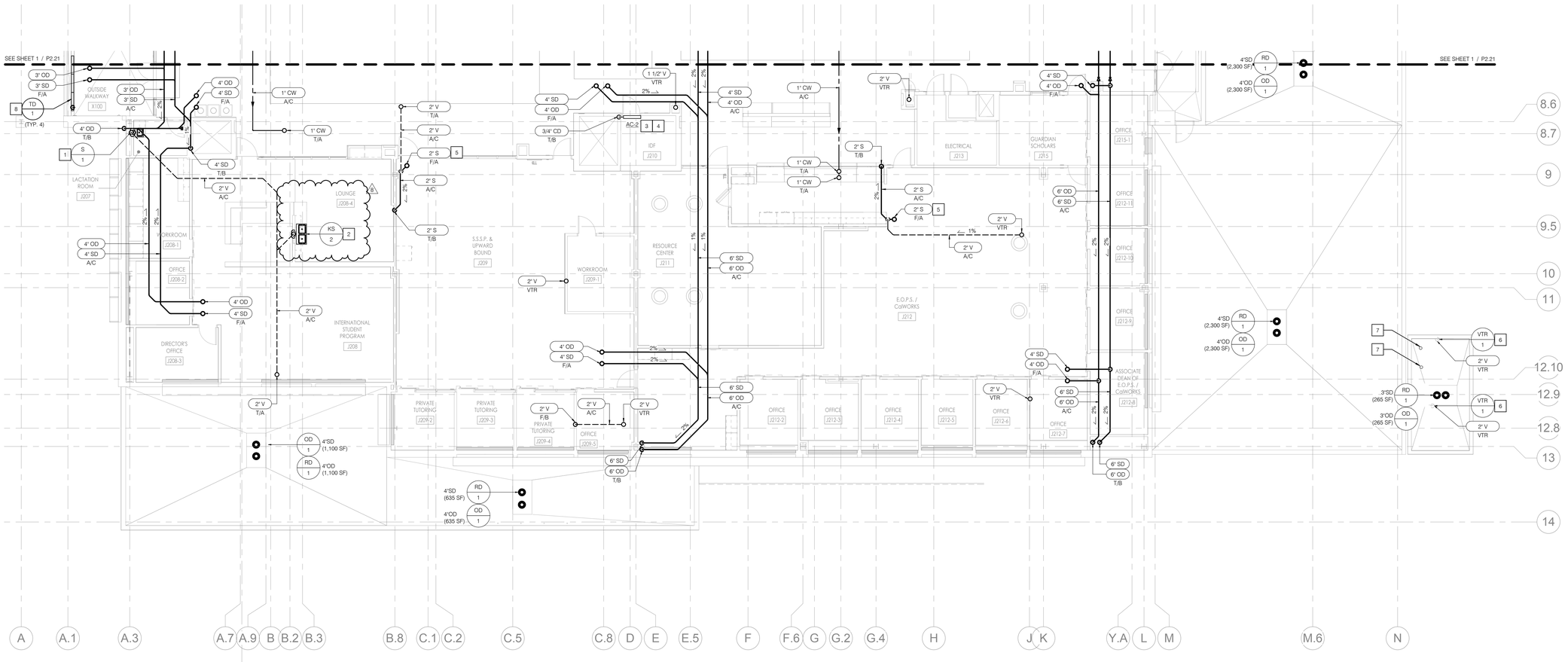

NORTH

SOUTH

N

SECOND FLOOR PLAN - SOUTH SCALE 1/8" = 1'-0" 1

P2S: 7411

hpi architecture
www.hpiarchitecture.com
115 22nd street
Newport Beach, CA 92663
o: 949. 675. 6442

CONSULTANTS
P2S ENG
Long Beach | Los Angeles
San Diego San Jose
p2sinc.com

CHRISTOPHER J. WEIL — No. M 30019 Exp 06/30/19 — MECHANICAL — STATE OF CALIFORNIA
SIGNED: 08/06/18

SEALS / APPROVALS

ELECTRICAL — CHRISTOPHER J. WEIL — No. E 18769 Exp 06/30/19 — STATE OF CALIFORNIA

IDENTIFICATION STAMP
DIV. OF THE STATE ARCHITECT
FILE: 30-C2
A# 0 4 - 1 1 6 8 1 0
AC _____ FLS _____ SS _____
DATE _____

PROJECT TITLE
JOHNSON STUDENT CENTER
INCREMENT 2
1530 W 17TH ST SANTA ANA CA 92706

RANCHO SANTIAGO Community College District

SUBMITTALS		
#	DATE	DESCRIPTION
	05/18/18	HEALTH DEPT. SUBMITTAL
	08/13/18	DSA FINAL SUBMITTAL
3	09/24/18	ADDENDUM 3
	10/08/18	ADDENDUM #5
	10/15/18	ADDENDUM #6
	10/22/18	ADDENDUM #8

PROJECT IDENTIFICATION 7411

THESE DRAWINGS ORIGINALLY CREATED IN AUTODESK REVIT V. 2016

THE ORIGINAL SIZE OF THIS SHEET IS 30" X 42".

DRAWN BY M Alcantara

CHECKED BY E Gomez

THESE DRAWINGS AND SPECIFICATIONS ARE THE PROPERTY AND COPYRIGHT OF THE ARCHITECT AND SHALL NOT BE USED ON ANY OTHER PROJECT OR LOCATIONS EXCEPT AS DESCRIBED ON THE DRAWINGS, WITHOUT WRITTEN AGREEMENT WITH THE ARCHITECT.

© HILL PARTNERSHIP INC. 2015

SHEET TITLE
SECOND FLOOR PLAN - SOUTH

SHEET NUMBER
P2.22

100% CONSTRUCTION DOCUMENTS

10/16/2018 6:05:14 PM   C:\Users\Eric Gomez\Documents\J7411_R16_MEPFA_Central_Eric Gomez.rvt

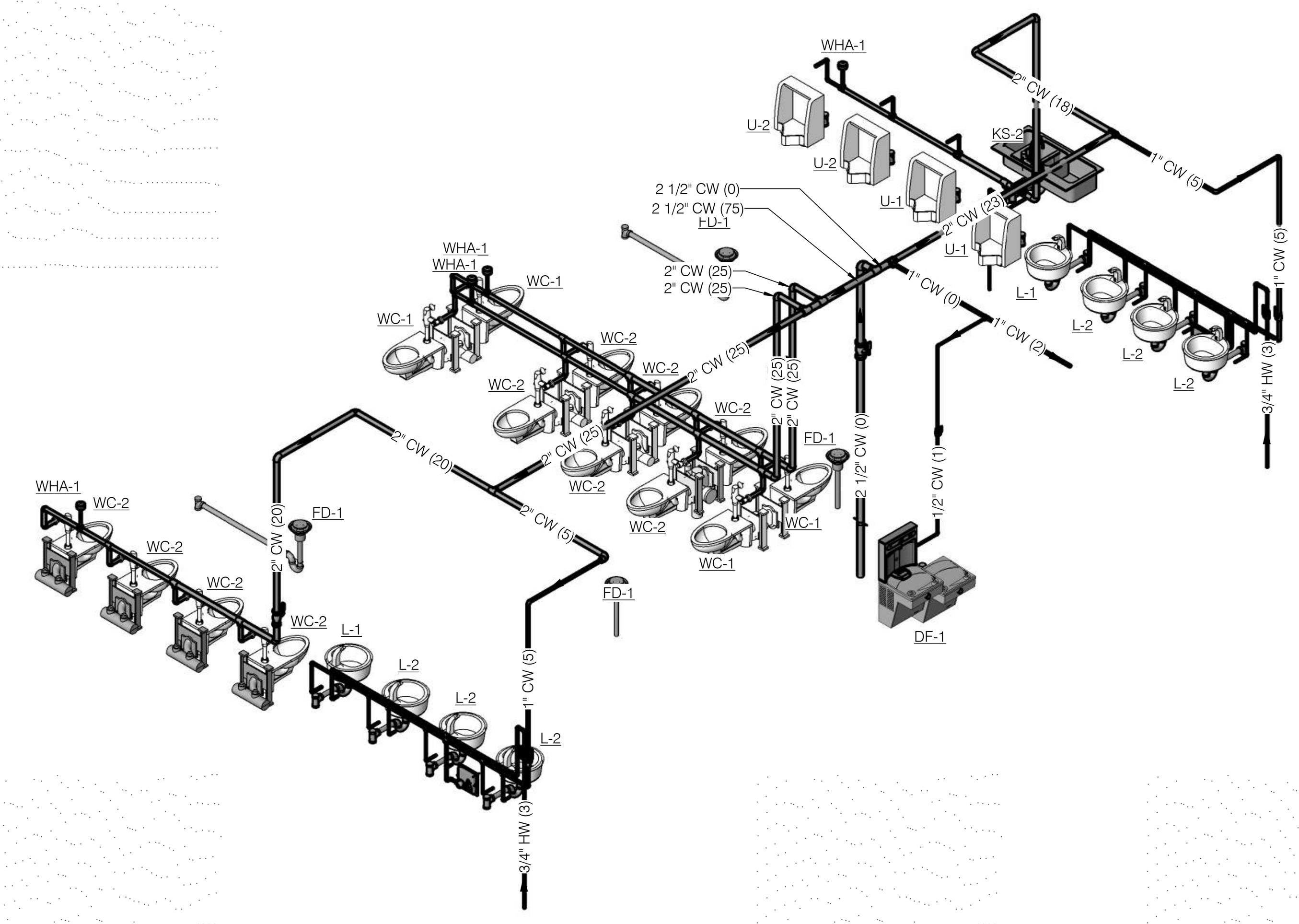

4 SECOND FLOOR RESTROOMS ISOMETRIC (WATER)
NO SCALE

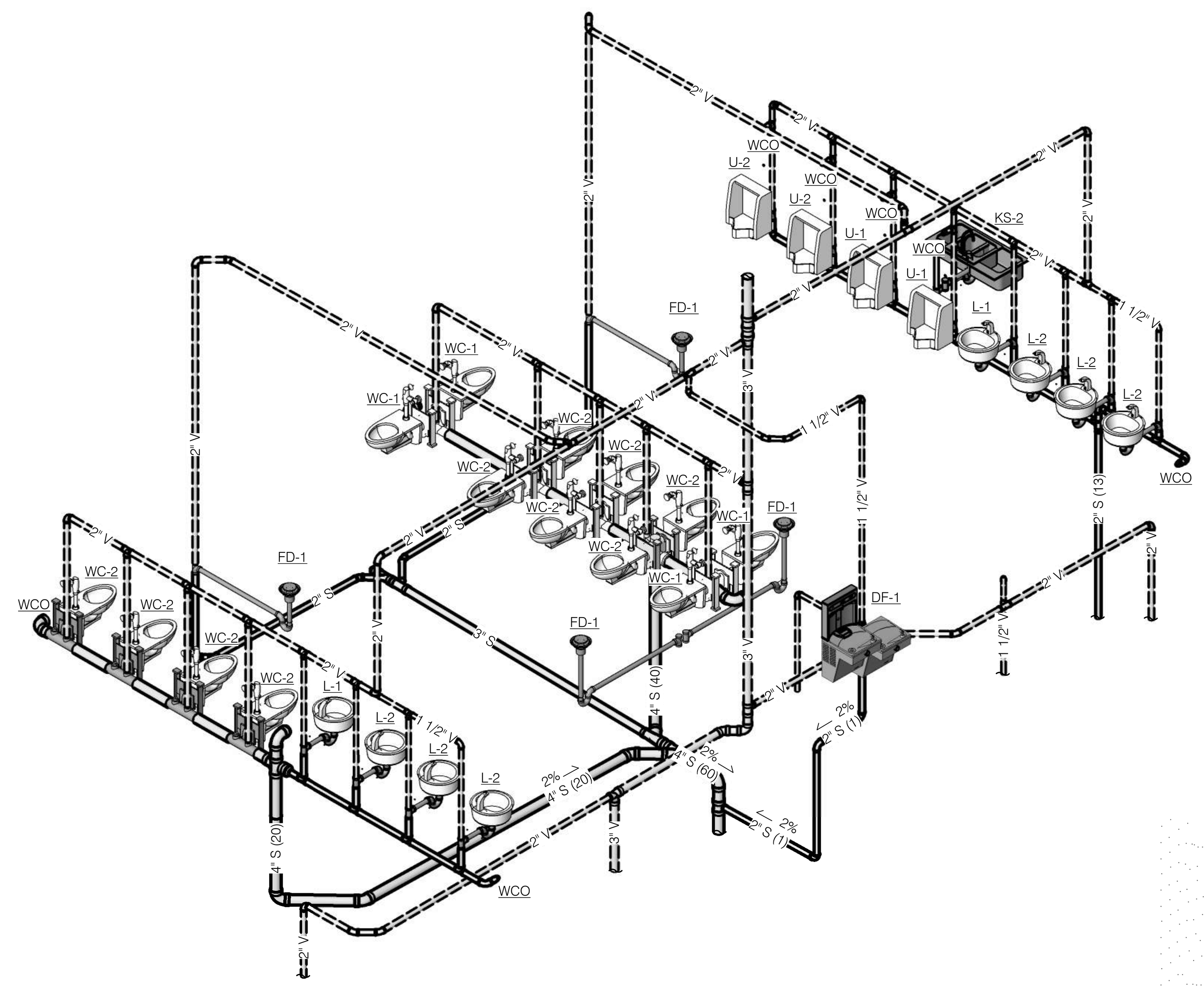

2 SECOND FLOOR RESTROOMS ISOMETRIC (WASTE & VENT)
NO SCALE

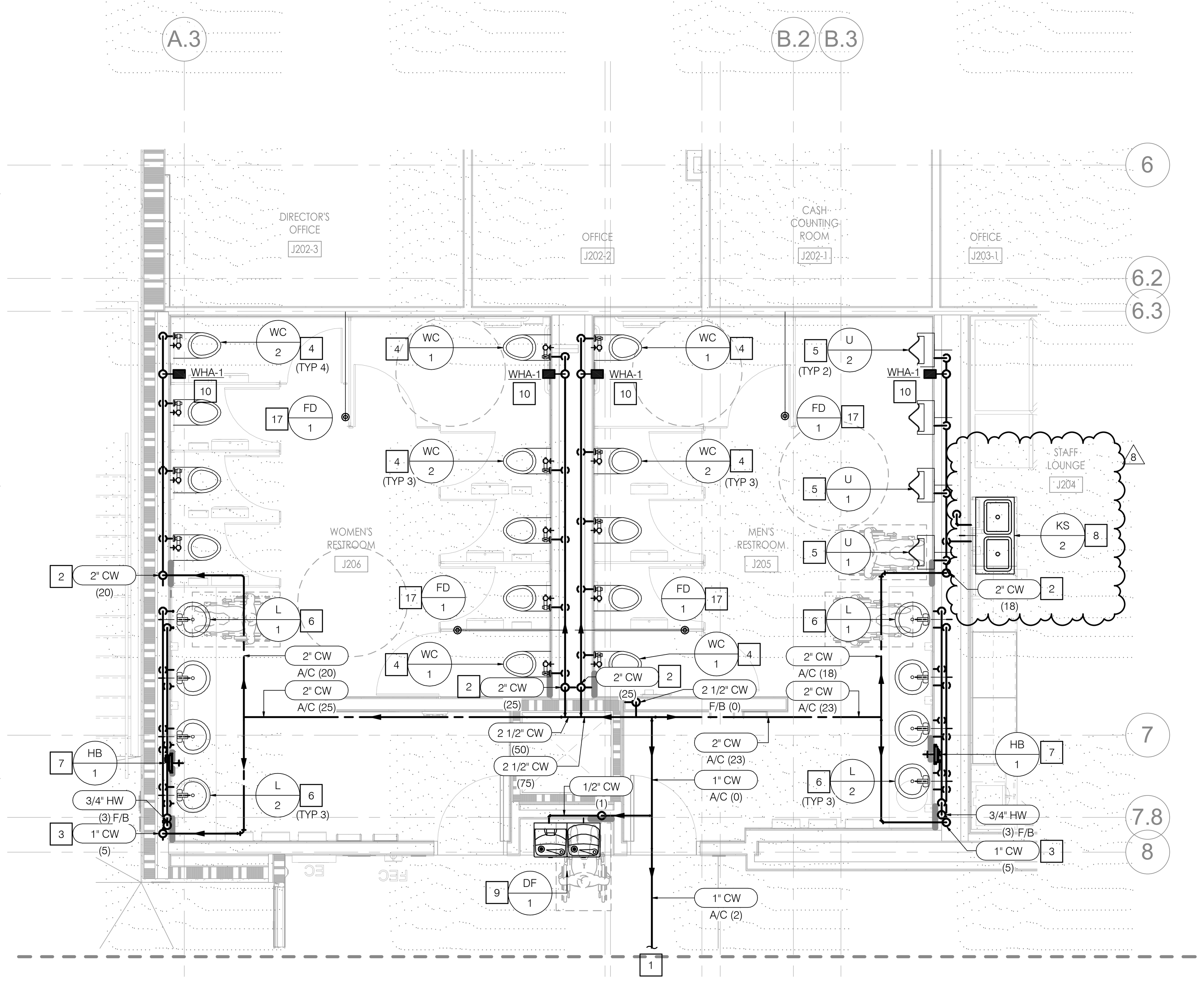

3 SECOND FLOOR RESTROOMS (WATER & GAS)
SCALE: 1/4" = 1'-0"

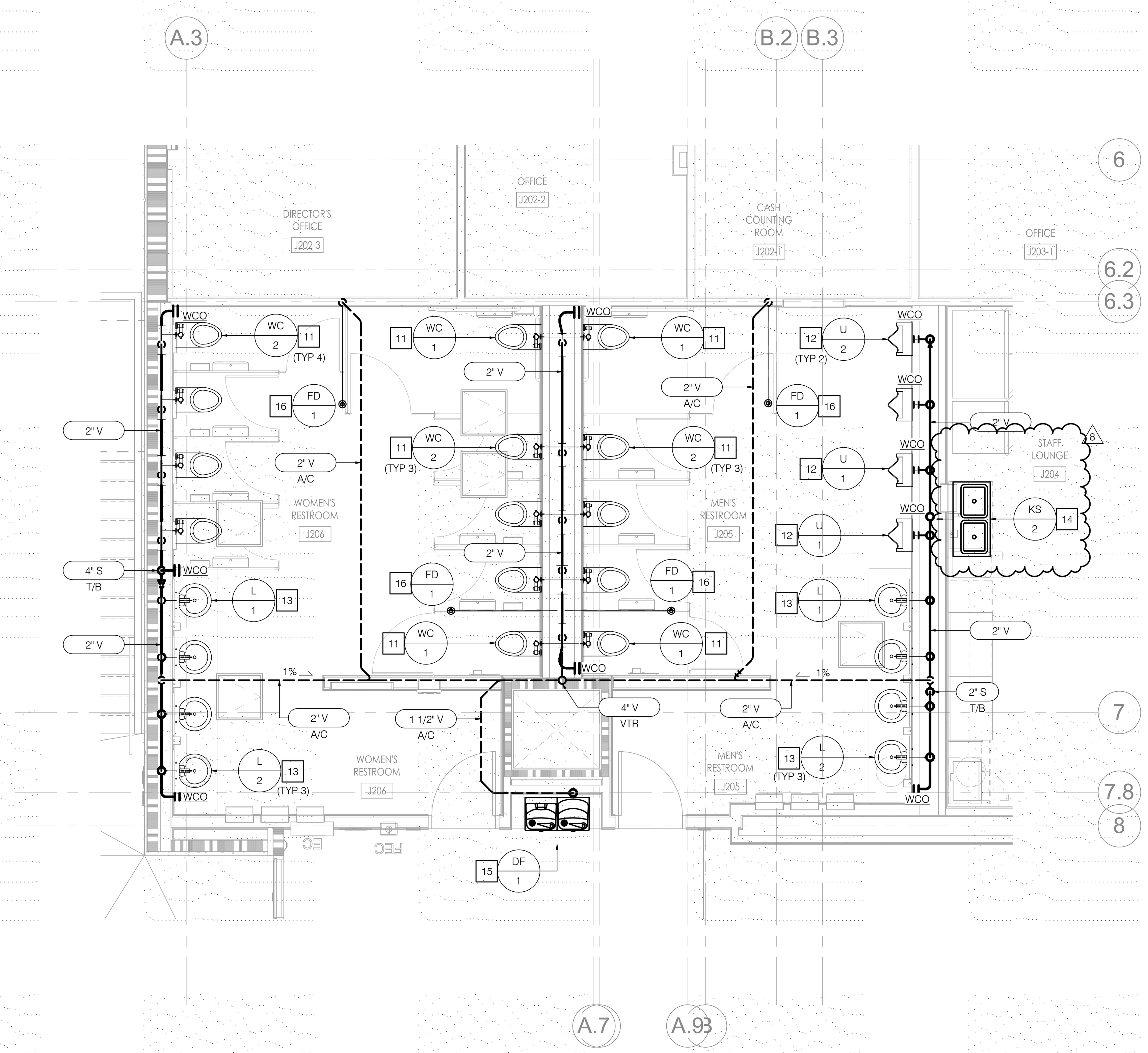

1 SECOND FLOOR RESTROOMS (WASTE & VENT)
SCALE: 1/4" = 1'-0"

NOTES

1. REFER TO 1/8" SCALE PARTIAL PLAN P2.21 FOR CONTINUATION.
2. 2" CW DOWN IN WALL TO FULL SIZE HEADER. PROVIDE FULL PORT SHUT-OFF VALVE BEHIND ACCESS PANEL.
3. 1" CW DOWN IN WALL & 3/4" HW FROM BELOW TO FULL SIZE HEADER. PROVIDE FULL PORT SHUT-OFF VALVES BEHIND ACCESS PANEL.
4. PROVIDE 1-1/2" CW FROM HEADER TO SERVE WATER CLOSET (WC-1/WC-2).
5. PROVIDE 3/4" CW FROM HEADER TO SERVE URINAL (U-1/U-2).
6. PROVIDE 1/2" CW & 1/2" HW FROM HEADER TO SERVE LAVATORY (L-1/L-2).
7. PROVIDE 3/4" CW FROM HEADER TO SERVE RECESSED HOSE BIBB (HB-1) LOCATED BELOW LAVATORY.
8. PROVIDE 1/2" CW & 1/2" HW FROM LEVEL BELOW TO SERVE KITCHEN SINK (KS-2). PROVIDE FULL PORT SHUT-OFF VALVE BEHIND ACCESS PANEL.
9. PROVIDE 1/2" CW DOWN IN WALL TO SERVE DRINKING FOUNTAIN (DF-1). PROVIDE FULL PORT SHUT-OFF VALVE BEHIND ACCESS PANEL.
10. PROVIDE WATER HAMMER ARRESTOR (WHA-1) BEHIND ACCESS PANEL.
11. PROVIDE 4" S DOWN & 2" V UP TO SERVE WATER CLOSET (WC-1/WC-2).
12. PROVIDE 2" S DOWN & 1-1/2" V UP TO SERVE URINAL (U-1/U-2).
13. PROVIDE 2" S DOWN & 1-1/2" V UP TO SERVE LAVATORY (L-1/L-2).
14. PROVIDE 2" S DOWN & 1-1/2" V UP TO SERVE KITCHEN SINK (KS-2).
15. PROVIDE 2" S DOWN & 1-1/2" V UP TO SERVE DRINKING FOUNTAIN (DF-1).
16. PROVIDE 2" S DOWN & 1-1/2" V UP TO SERVE FLOOR DRAIN (FD-1). REFER TO DETAIL 1/P6.01.
17. PROVIDE 1/2" TP BELOW FLOOR FROM FLUSHVALVE VACUUM BREAKER TYPE TRAP PRIMER (TP-2) TO SERVE FLOOR DRAIN (FD-1).

GENERAL NOTES

A. (#) INDICATES FIXTURE UNIT VALUE.
B. REFER TO 1ST FLOOR ENLARGED PLAN P3.02 FOR PIPING BELOW FLOOR.
C. COORDINATE SHUT-OFF VALVE LOCATIONS WITH ACCESS PANEL LOCATIONS SHOWN ON ARCHITECTURAL SECTIONS/ELEVATION DRAWINGS.

HPI architecture
www.hpiarchitecture.com
115 22nd street
Newport Beach, CA 92663
o: 949. 675. 6442

CONSULTANTS
P2S ENG
Long Beach | Los Angeles
San Diego San Jose
p2sinc.com

REGISTERED PROFESSIONAL ENGINEER CHRISTOPHER J. WEIXEL No. M27619 EXP. 06/30/19 MECHANICAL STATE OF CALIFORNIA
SIGNED: 08/06/18

SEALS / APPROVALS
LICENSED ARCHITECT LAWRENCE A. FRAPWELL NO. C 11360 Ren 6-30-19 STATE OF CALIFORNIA

IDENTIFICATION STAMP
DIV. OF THE STATE ARCHITECT
FILE: 30-C2
A# 04-116810
AC ________ FLS ________ SS ________
DATE ____________

PROJECT TITLE
JOHNSON STUDENT CENTER
INCREMENT 2
1530 W 17TH ST SANTA ANA CA 92706

RANCHO SANTIAGO Community College District

SUBMITTALS		
#	DATE	DESCRIPTION
	05/18/18	HEALTH DEPT. SUBMITTAL
	08/13/18	DSA FINAL SUBMITTAL
	09/24/18	ADDENDUM #3
	10/08/18	ADDENDUM #5
	10/15/18	ADDENDUM #6
	10/22/18	ADDENDUM #8

PROJECT IDENTIFICATION 7411
THESE DRAWINGS ORIGINALLY CREATED IN AUTODESK REVIT V. 2016
THE ORIGINAL SIZE OF THIS SHEET IS 30" X 42".

DRAWN BY M Alcantara

CHECKED BY E Gomez

THESE DRAWINGS AND SPECIFICATIONS ARE THE PROPERTY AND COPYRIGHT OF THE ARCHITECT AND SHALL NOT BE USED ON ANY OTHER PROJECT OR LOCATIONS EXCEPT AS DESCRIBED ON THE DRAWINGS, WITHOUT WRITTEN AGREEMENT WITH THE ARCHITECT.
(C) HILL PARTNERSHIP INC. 2015

SHEET TITLE
ENLARGED FLOOR PLANS

SHEET NUMBER
P3.03

100% CONSTRUCTION DOCUMENTS

10/16/2018 3:33:34 PM C:\Revit Files\J7411_R16_MEPFA_Central_Melissa Jackson.rvt

LIGHT FIXTURE SCHEDULE

TYPE	DESCRIPTION	TOTAL V-A	LAMPS NO.	LAMPS V-A	LAMPS TYPE	VOLTAGE	MTG.	MANUFACTURER/REMARKS	MANUFACTURER ALTERNATES
INTERIOR FIXTURES									
A1	2' X 4' LED ARCHITECTURAL RECESSED FIXTURE	37	1	37	LED	U	R	COLUMBIA LIGHTING #LSTE-24-40-MW-G-MPO-ED1-U	LITHONIA LIGHTING OPTION 1: #LITH-2AVL4-40L-MDR-EZ1-LP840 OPTION 2: #LITH-2AVL4-40L-ADP-EZ1-LP840
A2	SAME AS TYPE A1 EXCEPT LOWER LUMEN OUTPUT	33	1	33	LED	U	R	COLUMBIA LIGHTING #LSTE-24-40-VW-G-MPO-ED1-U	LITHONIA LIGHTING OPTION 1: #LITH-2AVL4-30L-MDR-EZ1-LP840 OPTION 2: #LITH-2AVL4-30L-ADP-EZ1-LP840
A3	2' X 2' LED ARCHITECTURAL RECESSED FIXTURE	29	1	29	LED	U	R	COLUMBIA LIGHTING #LSTE-22-40-LW-G-MPO-ED1-U	
B	LED PANEL BACKLIGHTING	44	1	4W/FT	LED	277	S	LUMICOR LIGHTING #LUMILIGHT	-
C	8' CURVED LED PENDANT FIXTURE	32	1	32	LED	U	P	ALERA LIGHTING #LCV-4-40-LW-S-CM-96-0ED-U-MW-DC	PEERLESS LIGHTING OPTION 1: #7CRM7L-LLP-4FT-MSL4-80CRI-40K-I1200LMF-DARK-ZT-277-SCT-F1/96A-C210
K	LED LOW BAY	57	1	57	LED	U	P	HUBBEL #LBS-4K-WH19-LO-CD-XX-U	-
L1A	18" DIA. DECORATIVE LED PENDANT	42	1	39	LED	U	P	PRUDENTIAL LIGHTING #P4018-LED4-MO-FWA-YGW-D9-SC-UNV-X1-ECO-IBC	-
L1B	2' DIA. DECORATIVE LED PENDANT	59	1	67	LED	U	P	PRUDENTIAL LIGHTING #P4020-LED4-MO-FWA-YGW-D9-SC-UNV-X1-ECO-IBC	-
L1C	3' DIA. DECORATIVE LED PENDANT	95	1	113	LED	U	P	PRUDENTIAL LIGHTING #P4030-LED4-MO-FWA-YGW-D9-SC-UNV-X1-ECO-IBC	-
L3R	4' LED DIRECT RECESSED FIXTURE	16	1	3.9 W/FT	LED	U	R	LITECONTROL #3L-(MOUNTING PER ARCH)-D-4-SOF-(FINISH PER ARCH)-40K-D40-D10-1C-UNV	PINNACLE ARCHITECTURAL LIGHTING OPTION 1: #PNCL-E2A-40-840-4-G1-U-OL-1-0-W
L3S	4' LED DIRECT RECESSED FIXTURE	33	1	8.1 W/FT	LED	U	R	LITECONTROL #3L-(MOUNTING PER ARCH)-D-4-SOF-(FINISH PER ARCH)-40K-D80-D10-1C-UNV	PINNACLE ARCHITECTURAL LIGHTING OPTION 1: #PNCL-E2A-40-840HO-4-G1-U-OL-1-0-W
L3P	4' LED INDIRECT/DIRECT PENDANT FIXTURE	PER PLANS	1	9.9 W/FT	LED	U	P	LITECONTROL #3L-P-ID-STD-04-SOF-(FINISH PER ARCH)-40K-I030-D075-D10-1C-UNV-FA2 SEE NOTE #2	PINNACLE ARCHITECTURAL LIGHTING OPTION 1: #PNCL-EX2BA-O-840-840-4-AC1-U-OL-1-W-96"-AC-CABLE
L3W	4' LED DIRECT WALL MOUNT FIXTURE	33	1	8.1 W/FT	LED	U	W	LITECONTROL #3L-W-D-4-SOF-(FINISH PER ARCH)-40K-D80-D10-1C-UNV	-
L6	6" LED DOWNLIGHT	15	1	15	LED	U	R	LITEFRAME #LF6LEDG4-6LFLED5G4-40K-VR	ALPHABET LIGHTING OPTION 1: #ALPHABET-NU6-RD-XTM19-13LM-40K-S30-120-DIM10-NC-MC-MC
L7	6" LED ADJUSTABLE DOWNLIGHT	15	1	15	LED	U	R	LITEFRAME #LFA6LEDG4-6LFALED5G4-40K-WL45	ALPHABET LIGHTING OPTION 1: #ALPHABET-NU6-RA-XTM19-13LM-40K-S30-120-DIM10-NC-MC-MC
L8	RECESSED LINEAR LED FIXTURE, LENGTH PER PLANS.	40	1	40	LED	U	R	PRUDENTIAL LIGHTING #PS3-LED4-LO-4-YG2-SAL-D1-SC-UNV-X3B-DM01 SEE NOTE #2	PINNACLE ARCHITECTURAL LIGHTING OPTION 1: #PNCL-ET4-A-840-4-G1-U-OL1-1-W
L10 (A)	8" LED DECORATIVE PENDANT	26	1	28	LED	U	P	CONTECH LIGHTING #CGL8-30-35K-MVD2-XX	-
M	4' LINEAR LED PENDANT FIXTURE	96	1	96	LED	U	P	COLUMBIA LIGHTING #MPL-4-9-40-VL-AD-ED-U-FSC5 AIRCRAFT CABLE (LWSQM5)	LITHONIA LIGHTING OPTION 1: #LITH-IBG-15000LM-SEF-AFL-ND-MVOLT-OZ10-40K-90CRI-CS93W-DHW
P	4' LINEAR LED PENDANT FIXTURE, WET LISTED	36	1	36	LED	U	P	COLUMBIA LIGHTING #LXEM-4-40-LW-RA-ED-U	BEGHELLI LIGHTING OPTION 1: #BEGHELLI-BS101LED-4-HT-LO-WT40-120-277
Q	ENCLOSED AND GASKETED WALL SCONCE WITH TEMPERED GLASS. WET LISTED	18	1	18	FL	U	W	HUBBELL - INDUSTRIAL LIGHTING #NV2FG18BHG	LITHONIA LIGHTING OPTION 1: #LITH-OLVTWM
T1	LED TRACK LIGHTING	PER TRACK HEAD	1	23	LED	277	T	LIGHTING SERVICES INC. - LUMELEX #LX2044-T19-18-98-40-X-OE-277 #XX-ONE CKT-XXXX	JUNO LIGHTING OPTION 1: #JLTG-T383L-40K-90CRI-PDIM-NFL-BL OPTION 2: #JLTG-HTEK4-8FT-BL
T2	LED TRACK LIGHTING	PER TRACK HEAD	1	23	LED	277	T	LIGHTING SERVICES INC. - LUMELEX #LX2044-T19-18-98-40-X-5A-277 #XX-ONE CKT-XXXX	JUNO LIGHTING OPTION 1: #JLTG-T383L-HTEK-40K-90CRI-PDIM-NFL-BL
X	LED EXIT SIGN	2.5	1	2.5	LED	U	S	ISOLITE #ELT-AC-XX	LITHONIA LIGHTING OPTION 1: #LITH-LQM-S-3-R-120/277-EL-N-M6
EXTERIOR FIXTURES									
S1	EXTERIOR WALL MOUNT, EGRESS LIGHT	32.5	1	32.5	LED	U	W	DUAL-LITE GEO PACK #RD11-4K-U-DB-E	LIGHTWAY LIGHTING OPTION 1: #LWAY-BDGW-7-U-21W-2-Z99-CEG
S2	EXTERIOR POST MOUNT, SITE LIGHT	57	1	57	LED	277	P	ARCHITECTURAL AREA # SP1-Y3-32LED-3K-550-COP-(TBD)-SCP-X	LIGMAN LIGHTING OPTION 1: #LIGMAN-FS-UEU-20286-2-55W-C-W30-XX POLE: #LIGMAN-APD-RSA-4012-14-4-0.125-XX
S3	EXTERIOR BOLLARD MOUNT, SITE LIGHT	15	1	15	LED	277	B	ARCHITECTURAL AREA # SPB-12LEDNW-COP-(TBD)-X	LIGMAN LIGHTING OPTION 1: #LIGMAN-FS-UEU-10016-20W-2-C-W40-XX
S4	EXTERIOR SURFACE MOUNT, TRELLIS LIGHT	25	1	25	LED	277	S	LUMINIS #SQ602-L2W12R1-277-(TBD)-SWK-X	-
S5	EXTERIOR SURFACE MOUNT WET LOCATION LOW LEVEL FLOODLIGHT	22	1	22	LED	277	S	ELP #222W1WLS	-
S6	EXTERIOR CANOPY RECESSED LINEAR LIGHT	42	1	42	LED	277	R	LITECONTROL #3L-R-D-4-X-X-REG-C4-D10-1C-UNV-S01	PINNACLE ARCHITECTURAL LIGHTING OPTION 1: #PNCL-EV3-R-840HO-4-U-OL1-1-S
S9	EXTERIOR STAND AND YOKE MOUNT STATUE LIGHT	27.6	1	27.6	LED	277	S	VISTA LIGHTING #1057-BR-X-40-B-MV-010-X	LIGMAN LIGHTING OPTION 1: #LIGMAN-UOD-5001-X-W40-120/277V-XX
S10	EXTERIOR CANOPY SURFACE MOUNT LINEAR LIGHT	4.9W/FT	1	4.9W/FT	LED	U	S	HUBBELL LIGHTING #3L-S-D-XX-SOF-XX-40K-D10-1C-UNV-1SD1/1SO1	
S11	EXTERIOR CEILING MOUNT WALL WASH LIGHT	15W/FT	1	15W/FT	LED	U	S	INSIGHT LIGHTING #MA-15-40K-ASY-D-CMS-72-INT2-XX-XX	

NOTES

1. VERIFY ALL FINISHES WITH OWNER.
2. VERIFY LENGTHS PER PLANS.

ABBREVIATIONS:

P = PENDANT
PO = POLE
R = RECESSED
S = SURFACE
RG = REGRESSED
T = TRACK
U = UNIVERSAL
W = WALL
B = BOLLARD
C = COVE
AC = ARCHITECTURAL COVE
AG = ABOVE GRADE
IG = IN GRADE

HPI architecture
www.hpiarchitecture.com
115 22nd street
Newport Beach, CA 92663
o: 949. 675. 6442

CONSULTANTS
P2S ENG
Long Beach | Los Angeles
San Diego San Jose
p2sinc.com

SEALS / APPROVALS

IDENTIFICATION STAMP
DIV. OF THE STATE ARCHITECT
FILE: 30-C2
A# 04 - 116810
AC _____ FLS _____ SS _____
DATE _____

PROJECT TITLE
JOHNSON STUDENT CENTER
INCREMENT 2
1530 W 17TH ST SANTA ANA CA 92706

RANCHO SANTIAGO Community College District

SUBMITTALS		
#	DATE	DESCRIPTION
	05/18/18	HEALTH DEPT. SUBMITTAL
	08/13/18	DSA FINAL SUBMITTAL
	09/24/18	ADDENDUM #3
	10/08/18	ADDENDUM #5
	10/15/18	ADDENDUM #6
	10/22/18	ADDENDUM #8

PROJECT IDENTIFICATION 7411
THESE DRAWINGS ORIGINALLY CREATED IN AUTODESK REVIT V. 2016
THE ORIGINAL SIZE OF THIS SHEET IS 30" X 42".

DRAWN BY C Naranjo
CHECKED BY C S Musser

THESE DRAWINGS AND SPECIFICATIONS ARE THE PROPERTY AND COPYRIGHT OF THE ARCHITECT AND SHALL NOT BE USED ON ANY OTHER HEIR PROJECT OR LOCATIONS EXCEPT AS DESCRIBED ON THE DRAWINGS, WITHOUT WRITTEN AGREEMENT WITH THE ARCHITECT.
© HILL PARTNERSHIP INC. 2015

SHEET TITLE
SCHEDULES

SHEET NUMBER
E0.03

100% CONSTRUCTION DOCUMENTS

10/17/2018 7:29:36 AM C:\Revit Files\J7411_R16_MEPFA_Central_Melissa Jackson.rvt

PANEL: 2M1

LOCATION: ELECTRICAL J126 — VOLTAGE/PHASE: 120/208V,3PH,4W — FED FROM: 2DB1
FLOOR: FIRST FLOOR — BUS AMPS: 125 A — RATING 10kAIC
MOUNTING: SURFACE — MAIN BREAKER: MLO

CKT	TYPE	LOAD	BKR/POLE		A	B	C	A	B	C	BKR/POLE		LOAD	TYPE	CKT
1					252 VA			100 VA			1	20 A	1ST FLOOR VAVs	M	2
3	M	HHWP-1 BOILER PUMP	20 A	3		252 VA			130 VA		1	20 A	1ST FLOOR VAVs	M	4
5							252 VA			150 VA	1	20 A	1ST FLOOR VAVs	M	6
7					252 VA			20 VA			1	20 A	1ST FLOOR VAVs	M	8
9	M	HHWP-2 BOILER PUMP	20 A	3		252 VA			334 VA		2	20 A	FAN F-1	M	10
11							252 VA			334 VA					12
13	M	HHWP-3 BOILER PUMP	20 A	2	720 VA			800 VA			1	20 A	GWH-2	M	14
15						720 VA			800 VA		1	20 A	GWH-1	M	16
17	M	HHWP-4 BOILDER PUMP	20 A	2			720 VA			800 VA	1	20 A	CIRC PUMP 1	M	18
19					720 VA			800 VA			1	20 A	CIRC PUMP 2	M	20
21	M	BOILER B-1	20 A	1		1176 VA			500 VA		1	20 A	DRY SUMP PIT	N	22
23	M	BOILER B-2	20 A	1			1176 VA			600 VA	1	20 A	DRINKING FOUNTAIN	N	24
25	N	TRAP PRIMER	20 A	1	300 VA			0 VA			1	20 A	SPARE	--	26
27	--	SPARE	20 A	1		0 VA			850 VA		1	20 A	PLUMBING SENSORS	N	28
29	N	GARBAGE DISPOSAL RM J112	20 A	1			1000 VA			500 VA	1	20 A	IRRIGATION CONTROLLER	N	30
31	N	PLUMBING SENSORS	20 A	1	200 VA			1830 VA			2	20 A	DOCK LEVELER	N	32
33	N	PLUMBING SENSORS	20 A	1		500 VA			0 VA						34
35	N	PLUMBING SENSORS	20 A	1			500 VA			180 VA	1	20 A	EXT DRINKING FOUNTAIN	R	36
37	--	SPARE	20 A	1	0 VA			0 VA			--	--	SPACE	--	38
39	--	SPARE	20 A	1		0 VA			0 VA		--	--	SPACE	--	40
41	--	SPARE	20 A	1			0 VA			0 VA	--	--	SPACE	--	42

LOAD TYPE KEY:
N= NON CONTINUOUS — M=MECH EQUIP — TOTAL A: 5994 VA 51 A
R=RECEPTACLE — R=RECEPTACLE — TOTAL B 5514 VA 46 A
L=LIGHTING — K=KITCHEN — TOTAL C: 6464 VA 54 A

LOAD TYPE	CONNECTED	DEMAND FACTOR	ESTIMATED	PANEL TOTALS		
N	6780 VA	100.00%	6780 VA			
R	180 VA	100.00%	180 VA			
M	11011 VA	100.00%	11011 VA			
				TOTAL LOAD:	17971 VA	50 A
				TOTAL DEMAND LOAD:	17971 VA	50 A

PANEL: 2K1

LOCATION: SERVICE CORRIDOR J128 — VOLTAGE/PHASE: 120/208V,3PH,4W — FED FROM: 2DB1
FLOOR: FIRST FLOOR — BUS AMPS: 225 A — RATING 10kAIC
MOUNTING: SURFACE — MAIN BREAKER: MLO

CKT	TYPE	LOAD	BKR/POLE		A	B	C	A	B	C	BKR/POLE		LOAD	TYPE	CKT
1	C	DED FRIDGE REC J118-2	20 A	1	1320 VA			5824 VA			2	40 A	COFFEE MAKER REC J118-1	K	2
3	K	DED REC WORKTABLE J118-2	20 A	1		800 VA			0 VA						4
5	K	DED REC WORKTABLE J118-2	20 A	1			800 VA			1200 VA	1	20 A	FREEZER REC J118-1	C	6
7	R	DED REC AIR CURTAIN J118-2	20 A	1	1080 VA			1000 VA			1	20 A	DED REC COFFEE GRINDER	K	8
9	C	DED REC FIRE PROTECT J118-2	20 A	1		720 VA			1100 VA		2	20 A	DED REC SOUP WELL	K	10
11	C	DED FRIDGE REC J118-2	20 A	1			1200 VA			0 VA					12
13	O	EXHAUST HOODS J118-2	30 A	1	2520 VA			4160 VA			2	50 A	DED REC OVEN J118-1	K	14
15	C	DED REC ICE MAKER J118-2	20 A	2		3330 VA			4160 VA						16
17							0 VA			4160 VA	2	50 A	DED REC OVEN J118-1	K	18
19	K	DED REC FRIDGE DISPLAY	20 A	1	1440 VA			4160 VA							20
21	N	REC CASH REGISTER	20 A	1		1440 VA			1080 VA		1	20 A	REC SERV. COUNTER	N; C	22
23	K	DED REC ESPRESSO MACHINE	40 A	2			3120 VA			1200 VA	1	20 A	DED REC COFFEE GRINDER	K	24
25					3120 VA			456 VA			1	20 A	DED REC DROP IN COLD UNIT	K	26
27	K	DED REC ESPRESSO MACHINE	40 A	2		3120 VA			1000 VA		1	20 A	CON REC/ TV RECS	C; K	28
29							3120 VA			1200 VA	1	20 A	DED REC SELF SNEEZE GUARD	N	30
31	--	SPARE	20 A	1	0 VA			0 VA			1	20 A	SPARE	--	32
33	--	SPARE	20 A	1		0 VA			0 VA		1	20 A	SPARE	--	34
35	--	SPARE	20 A	1			0 VA			0 VA	1	20 A	SPARE	--	36
37	--	SPACE	--	--	0 VA			4390 VA							38
39	--	SPACE	--	--		0 VA			6666 VA		3	100 A	PANEL 2K1A	P; R; C; K	40
41	--	SPACE	--	--			0 VA			5345 VA					42

LOAD TYPE KEY:
N= NON CONTINUOUS — M=MECH EQUIP — TOTAL A: 29470 VA 248 A
R=RECEPTACLE — R=RECEPTACLE — TOTAL B 23416 VA 198 A
L=LIGHTING — K=KITCHEN — TOTAL C: 21345 VA 178 A

LOAD TYPE	CONNECTED	DEMAND FACTOR	ESTIMATED	PANEL TOTALS		
N	3360 VA	100.00%	3360 VA			
R	5810 VA	100.00%	5810 VA			
C	16125 VA	125.00%	20156 VA			
K	45740 VA	65.00%	29731 VA			
P	675 VA	100.00%	675 VA	TOTAL LOAD:	74230 VA	206 A
O	2520 VA	100.00%	2520 VA	TOTAL DEMAND LOAD:	62252 VA	173 A

NOTES

1 FED FROM IT UPS. REFER TO SINGLE LINE DIAGRAM, SHEET E5.01 FOR ADDITIONAL INFORMATION.

2 PROVIDE LOCK-ON DEVICE, RED IN COLOR.

PANEL: 2R1

LOCATION: ELECTRICAL J126 — VOLTAGE/PHASE: 120/208V,3PH,4W — FED FROM: 2DB1
FLOOR: FIRST FLOOR — BUS AMPS: 225 A — RATING 10kAIC
MOUNTING: SURFACE — MAIN BREAKER: MLO

CKT	TYPE	LOAD	BKR/POLE		A	B	C	A	B	C	BKR/POLE		LOAD	TYPE	CKT
1	R; C	PROJECTOR & SCREEN RM J101	20 A	1	380 VA			360 VA			1	20 A	EXT. RECEPT WEST	R	2
3	R	FOOSBALL TABLE RM J101	20 A	1		360 VA			1080 VA		1	20 A	FLOOR BOX REC RM J100-1	R	4
5	R	FLAT PANEL REC RM J101	20 A	1			360 VA			1080 VA	1	20 A	FF REC RM J101-1	P	6
7	P	MOTOR WINDOW SHADE RM...	20 A	1	900 VA			720 VA			1	20 A	CONT REC RM J102-2	R	8
9	R	FLR RECEPT GAME TABLE J101	20 A	1		360 VA			360 VA		1	20 A	NON CONT REC RM J102-2,3	R	10
11	R	FLR RECEPT GAME TABLE J101	20 A	1			360 VA			720 VA	1	20 A	CONT REC RM J102-3	R	12
13	R	FLR RECEPT GAME TABLE J101	20 A	1	360 VA			720 VA			1	20 A	CONT RECEPT J103	R	14
15	R	FLR RECEPT RM J101	20 A	1		900 VA			360 VA		1	20 A	NON CONT RECEPT J103	R	16
17	R	FLR RECEPT RM J101	20 A	1			1260 VA			720 VA	1	20 A	CONT RECEPT J103	R	18
19	P; R	FLR RECEPT RM J101	20 A	1	1260 VA			360 VA			1	20 A	NON CONT RECEPT J103	R	20
21	R	RECEPTS RM J101	20 A	1		900 VA			900 VA		1	20 A	CONT REC RM J103	R	22
23	R	RECEPTS RM J101, EXT.	20 A	1			900 VA			540 VA	1	20 A	NON CONT REC RM J103	R	24
25	R	PRINTER RM J101	20 A	1	1400 VA			360 VA			1	20 A	NON CONT REC RM J103	R	26
27	R	PRINTER RM J102	20 A	1		1400 VA			940 VA		1	20 A	CONT REC RM J103	R	28
29	R	CONV REC RM J101	20 A	1			720 VA			540 VA	1	20 A	CONV REC J100-1	R	30
31	C	FLAT PANEL J100-1, J101, J102-2	20 A	1	600 VA			200 VA			1	20 A	FLAT PANEL DISPLAY J100-1	C	32
33	R	AV RACK J101	20 A	1		450 VA			360 VA		1	20 A	REC RM J103-2	R	34
35	R	CONT REC RM J102-1	20 A	1			1080 VA			540 VA	1	20 A	FURNITURE REC RM J104	P	36
37	R	NON CONT REC RM J101, J102-1	20 A	1	540 VA			400 VA			1	20 A	SHRT THRW PROJECTOR J104	R	38
39	R	MOTORIZED DOOR J100	20 A	1		500 VA			450 VA		1	20 A	AV REC RM J104	R	40
41	R	DIGITAL SIGNAGE J100-1	20 A	1			360 VA			560 VA	1	20 A	REC RM J103-2, J104	R	42
43	P; N	ADA DOOR J101, J100-1, J116-118	20 A	1	1000 VA			720 VA			1	20 A	REC RM J103-2, J104	R	44
45	R	ATM KIOSK J100-1	20 A	1		720 VA			0 VA		1	20 A	SPARE	--	46
47	R	CONT REC RM J102	20 A	1			720 VA			0 VA	1	20 A	SPARE	--	48
49	R	NON CONT REC RM J102	20 A	1	720 VA			1080 VA			1	20 A	EXTERIOR BENCH RECEPTS	R	50
51	R	CONT REC RM J102	20 A	1		900 VA			1260 VA		1	20 A	EXTERIOR BENCH RECEPTS	R	52
53	R	FLOOR BOX RECEPT RM J100-1	20 A	1			1080 VA			900 VA	1	20 A	EXTERIOR BENCH RECEPTS	R	54
55	P	FF REC RM J100-1	20 A	1	1080 VA			1080 VA			1	20 A	EXTERIOR BENCH RECEPTS	R	56
57	R	FLOOR BOX REC RM J100-1	20 A	1		1080 VA			500 VA		1	20 A	EMERGENCY TELEPHONE	P	58
59	R	FLOOR BOX REC RM J100-1	20 A	1			720 VA			500 VA	1	20 A	EMERGENCY TELEPHONE	P	60
61	--	SPARE	20 A	1	0 VA			0 VA			1	20 A	SPARE	--	62
63	--	SPARE	20 A	1		0 VA			0 VA		1	20 A	SPARE	--	64
65	--	SPARE	20 A	1			0 VA			0 VA	1	20 A	SPARE	--	66
67	--	SPACE	--	--	0 VA			11360...							68
69	--	SPACE	--	--		0 VA			7190 VA		3	100 A	PANEL 2R1A	P; N; R; C	70
71	--	SPACE	--	--			0 VA			10560...					72

LOAD TYPE KEY:
N= NON CONTINUOUS — M=MECH EQUIP — TOTAL A: 25600 VA 218 A
R=RECEPTACLE — R=RECEPTACLE — TOTAL B 20970 VA 175 A
L=LIGHTING — K=KITCHEN — TOTAL C: 24220 VA 206 A

LOAD TYPE	CONNECTED	DEMAND FACTOR	ESTIMATED	PANEL TOTALS		
N	7600 VA	100.00%	7600 VA			
R	51170 VA	59.77%	30585 VA			
C	4900 VA	125.00%	6125 VA			
P	7120 VA	100.00%	7120 VA			
				TOTAL LOAD:	70790 VA	196 A
				TOTAL DEMAND LOAD:	51430 VA	143 A

PANEL: 2T1

LOCATION: BDF J111 — VOLTAGE/PHASE: 120/208V,3PH,4W — FED FROM: 2DB1 [1]
FLOOR: FIRST FLOOR — BUS AMPS: 125 A — RATING 10kAIC
MOUNTING: SURFACE — MAIN BREAKER: 100 A

CKT	TYPE	LOAD	BKR/POLE		A	B	C	A	B	C	BKR/POLE		LOAD	TYPE	CKT
1	N	ACCESS AND SECURITY CNTRL	20 A	1	400 VA			1080 VA			1	20 A	CONV. RECEPT BDF J111	R	2
3	R	RACK RECEPT BDF J111	30 A	2		800 VA			1080 VA		1	20 A	CONV. RECEPT BDF J111	R	4
5							0 VA			800 VA	2	30 A	RACK RECEPT BDF J111	R	6
7	R	RACK RECEPT BDF J111	30 A	2	800 VA			0 VA							8
9						0 VA			800 VA		2	30 A	RACK RECEPT BDF J111	R	10
11	R	RACK RECEPT BDF J111	30 A	2			800 VA			0 VA					12
13					0 VA			800 VA			2	30 A	RACK RECEPT BDF J111	R	14
15	R	QUAD RACK RECEPT BDF J111	20 A	1		360 VA			0 VA						16
17	R	QUAD RACK RECEPT BDF J111	20 A	1			360 VA			0 VA	1	20 A	SPARE	--	18
19	R	QUAD RACK RECEPT BDF J111	20 A	1	360 VA			0 VA			1	20 A	SPARE	--	20
21	R	QUAD RACK RECEPT BDF J111	20 A	1		360 VA			0 VA		1	20 A	SPARE	--	22
23	--	SPARE	20 A	1			0 VA			0 VA	1	20 A	SPARE	--	24
25	--	SPARE	20 A	1	0 VA			0 VA			1	20 A	SPARE	--	26
27	--	SPARE	20 A	1		0 VA			0 VA		1	20 A	SPARE	--	28
29	--	SPARE	20 A	1			0 VA			0 VA	1	20 A	SPARE	--	30
31	--	SPARE	20 A	1	0 VA			0 VA			1	20 A	SPARE	--	32
33	--	SPARE	20 A	1		0 VA			0 VA		1	20 A	SPARE	--	34
35	--	SPARE	20 A	1			0 VA			0 VA	1	20 A	SPARE	--	36
37	--	SPACE	--	--	0 VA			3400 VA							38
39	--	SPACE	--	--		0 VA			3400 VA		3	100 A	FEED TO PANEL 2T2	N; R	40
41	--	SPACE	--	--			0 VA			2320 VA					42

LOAD TYPE KEY:
N= NON CONTINUOUS — M=MECH EQUIP — TOTAL A: 6840 VA 60 A
R=RECEPTACLE — R=RECEPTACLE — TOTAL B 6800 VA 60 A
L=LIGHTING — K=KITCHEN — TOTAL C: 4280 VA 36 A

LOAD TYPE	CONNECTED	DEMAND FACTOR	ESTIMATED	PANEL TOTALS		
N	7360 VA	100.00%	7360 VA			
R	10560 VA	97.35%	10280 VA			
				TOTAL LOAD:	17920 VA	50 A
				TOTAL DEMAND LOAD:	17640 VA	49 A

PANEL: 2K1A

LOCATION: SERVICE CORRIDOR J128 — VOLTAGE/PHASE: 120/208V,3PH,4W — FED FROM: 2K1
FLOOR: FIRST FLOOR — BUS AMPS: 125 A — RATING 10kAIC
MOUNTING: SURFACE — MAIN BREAKER: MLO

CKT	TYPE	LOAD	BKR/POLE		A	B	C	A	B	C	BKR/POLE		LOAD	TYPE	CKT
1	K	DED REC BLENDER	20 A	1	1800 VA			0 VA			1	20 A	SPARE	--	2
3	K	DED REC BLENDER	20 A	1		1800 VA			0 VA		1	20 A	SPARE	--	4
5	P; R	CONV REC, AIR CURTAIN	20 A	1			1845 VA			0 VA	1	20 A	SPARE	--	6
7	R	TV REC	20 A	1	850 VA			0 VA			1	20 A	SPARE	--	8
9	C	DED REC REACH IN FREEZER	20 A	1		1116 VA			0 VA		1	20 A	SPARE	--	10
11	C	DED REC REACH IN FRIDGE	20 A	1			1020 VA			0 VA	1	20 A	SPARE	--	12
13	C	DED REC REACH IN FRIDGE	20 A	1	1020 VA			0 VA			1	20 A	SPARE	--	14
15	C	DED REC AIR SCREEN MERCH.	30 A	2		2120 VA			0 VA		1	20 A	SPARE	--	16
17							2120 VA			0 VA	1	20 A	SPARE	--	18
19	--	SPARE	20 A	1	0 VA			0 VA			1	20 A	SPARE	--	20
21	P; R	REC MOTOR SHADE/CONV REC	20 A	1		1630 VA			0 VA		1	20 A	SPARE	--	22
23	R	DED MICROWAVE REC RM J116	20 A	1			360 VA			0 VA	1	20 A	SPARE	--	24
25	R	FLOORBOX REC J116	20 A	1	720 VA			0 VA			1	20 A	SPARE	--	26
27	--	SPARE	20 A	1		0 VA			0 VA		1	20 A	SPARE	--	28
29	--	SPARE	20 A	1			0 VA			0 VA	1	20 A	SPARE	--	30
31	--	SPARE	20 A	1	0 VA			0 VA			1	20 A	SPARE	--	32
33	--	SPARE	20 A	1		0 VA			0 VA		1	20 A	SPARE	--	34
35	--	SPARE	20 A	1			0 VA			0 VA	1	20 A	SPARE	--	36
37	--	SPACE	--	--	0 VA			0 VA			--	--	SPACE	--	38
39	--	SPACE	--	--		0 VA			0 VA		--	--	SPACE	--	40
41	--	SPACE	--	--			0 VA			0 VA	--	--	SPACE	--	42

LOAD TYPE KEY:
N= NON CONTINUOUS — M=MECH EQUIP — TOTAL A: 4390 VA 37 A
R=RECEPTACLE — R=RECEPTACLE — TOTAL B 6666 VA 57 A
L=LIGHTING — K=KITCHEN — TOTAL C: 5345 VA 46 A

LOAD TYPE	CONNECTED	DEMAND FACTOR	ESTIMATED	PANEL TOTALS		
R	4730 VA	100.00%	4730 VA			
C	7395 VA	125.00%	9244 VA			
K	3600 VA	100.00%	3600 VA			
P	675 VA	100.00%	675 VA			
				TOTAL LOAD:	16400 VA	46 A
				TOTAL DEMAND LOAD:	18249 VA	51 A

PANEL: 2R2

LOCATION: ELECTRICAL J126 — VOLTAGE/PHASE: 120/208V,3PH,4W — FED FROM: 2DB1
FLOOR: FIRST FLOOR — BUS AMPS: 225 A — RATING 10kAIC
MOUNTING: SURFACE — MAIN BREAKER: MLO

CKT	TYPE	LOAD	BKR/POLE		A	B	C	A	B	C	BKR/POLE		LOAD	TYPE	CKT
1	R	CONT REC RM J108-2	20 A	1	720 VA			200 VA			1	20 A	FLAT PANELS J110	C	2
3	R	NON CONT REC RM J108-2	20 A	1		360 VA			720 VA		1	20 A	NON CONT REC RM J110	R	4
5	R	DED REC PRINTER RM J108-2	20 A	1			800 VA			720 VA	1	20 A	CONT REC RM J110	R	6
7	C	PANEL DISPLAYS RMS J108-2,3,4	20 A	1	600 VA			1400 VA			1	20 A	DED REC PRINTER RM 110-14	R	8
9	R	CONT REC RM J108-4	20 A	1		1260 VA			1000 VA		1	20 A	DED REC SHREDDER RM 110-14	R	10
11	R	NON CONT REC RM J108-4	20 A	1			360 VA			540 VA	1	20 A	NON CONT REC RM 110-14	R; C	12
13	C	PANEL DISPLAYS RMS J108-5-8	20 A	1	800 VA			1700 VA			1	20 A	HAND DRYER J110-18	N	14
15	R	CONT REC RM J108-5-6	20 A	1		1080 VA			1700 VA		1	20 A	HAND DRYER J110-15	N	16
17	R	NON CONT REC RMS J108-5	20 A	1			720 VA			300 VA	1	20 A	PPR TWL DISP RR J110-10,15,18	N	18
19	R	CONT REC RMS J108-7-8	20 A	1	1260 VA			900 VA			1	20 A	CONV REC RM J110,-8,10,15,18	R	20
21	R	CONT. FF RM D.S.P.S.-1 J108-1	20 A	1		1080 VA			540 VA		1	20 A	REC RM J110-1-1	R	22
23	R	CONT. FF RM D.S.P.S.-1 J108-1	20 A	1			1080 VA			720 VA	1	20 A	CONV REC J110-1-1	R	24
25	R	NON CONT FF REC J108-1	20 A	1	540 VA			600 VA			1	20 A	DED REC FRIDGE J110-1-1	R	26
27	R	NON CONT FF REC J108-1	20 A	1		540 VA			360 VA		1	20 A	FF RM J110-1-1	R	28
29	R	PRINTER RM J108	20 A	1			800 VA			360 VA	1	20 A	FF RM J110-1-1	R	30
31	P	FF FLR FM J108	20 A	1	540 VA			360 VA			1	20 A	FF RM J110-1-1	R	32
33	R	CONT REC RMS J110-6-7	20 A	1		1080 VA			360 VA		1	20 A	FF RM J110-1-1	R	34
35	R	NON CONT REC RMS J110-4-8	20 A	1			720 VA			1400 VA	1	20 A	DED REC PRINTER J110-1-1	R	36
37	R	CONT REC RMS J110-4-5	20 A	1	1080 VA			600 VA			1	20 A	DED REC FRIDGE J110-19	R	38
39	R	CONT REC RMS J110-3	20 A	1		720 VA			600 VA		1	20 A	DED REC FRIDGE J110-19	R	40
41	R	NON CONT REC RM J110-3	20 A	1			540 VA			600 VA	1	20 A	DED REC FREEZER/ICE J110-20	R	42
43	R	REC RM J110-16	20 A	1	900 VA			720 VA			1	20 A	REC RM J110-19	R	44
45	R	REC RM J110-17	20 A	1		900 VA			1080 VA		1	20 A	REC RM J110-19	R	46
47	R	NON CONT REC RM J110	20 A	1			360 VA			900 VA	1	20 A	REC RM J110-9	R	48
49	R	CONT REC RM J110	20 A	1	900 VA			360 VA			1	20 A	REC RM J110-9,11	R	50
[2] 51	N	FACP	20 A	1		500 VA			900 VA		1	20 A	REC RM J110-11	R	52
[2] 53	N	FAPS-1	20 A	1			500 VA			1700 VA	1	20 A	HAND DRYER RM J110-10	N	54
55	N	N	20 A	1	200 VA			1080 VA			1	20 A	CONT REC RM J110-12	R	56
57	R	NON CONT FF RM J120	20 A	1		360 VA			720 VA		1	20 A	NON CONT REC RM J110-12,13	R	58
59	R	CONT REC FF RM J120	20 A	1			900 VA			1080 VA	1	20 A	CONT REC RM J110-13	R	60
61	--	SPARE	20 A	1	0 VA			0 VA			1	20 A	SPARE	--	62
63	--	SPARE	20 A	1		0 VA			0 VA		1	20 A	SPARE	--	64
65	--	SPARE	20 A	1			0 VA			0 VA	1	20 A	SPARE	--	66
67	--	SPACE	--	--	0 VA			9320 VA							68
69	--	SPACE	--	--		0 VA			9620 VA		3	100 A	PANEL 2R2A	P; N; R	70
71	--	SPACE	--	--			0 VA			9680 VA					72

LOAD TYPE KEY:
N= NON CONTINUOUS — M=MECH EQUIP — TOTAL A: 24780 VA 207 A
R=RECEPTACLE — R=RECEPTACLE — TOTAL B 25480 VA 212 A
L=LIGHTING — K=KITCHEN — TOTAL C: 24780 VA 207 A

LOAD TYPE	CONNECTED	DEMAND FACTOR	ESTIMATED	PANEL TOTALS		
N	10400 VA	100.00%	10400 VA			
R	59720 VA	58.37%	34860 VA			
C	1780 VA	125.00%	2225 VA			
P	3140 VA	100.00%	3140 VA			
				TOTAL LOAD:	75040 VA	208 A
				TOTAL DEMAND LOAD:	50625 VA	141 A

PANEL: 2T2

LOCATION: IDF J210 — VOLTAGE/PHASE: 120/208V,3PH,4W — FED FROM: 2T1
FLOOR: SECOND FLOOR — BUS AMPS: 125 A — RATING 10kAIC
MOUNTING: SURFACE — MAIN BREAKER: 100 A

CKT	TYPE	LOAD	BKR/POLE		A	B	C	A	B	C	BKR/POLE		LOAD	TYPE	CKT
1	N	RACK RECEPT IDF J210	30 A	2	800 VA			1080 VA			1	20 A	CONV RECEPT IDF J210	R	2
3						0 VA			1080 VA		1	20 A	CONV RECEPT IDF J210	R	4
5	N	RACK RECEPT IDF J210	30 A	2			800 VA			360 VA	1	20 A	QUAD RACK RECEPT IDF J210	N	6
7					0 VA			360 VA			1	20 A	QUAD RACK RECEPT IDF J210	N	8
9	N	RACK RECEPT IDF J210	30 A	2		800 VA			360 VA		1	20 A	QUAD RACK RECEPT IDF J210	N	10
11							0 VA			360 VA	1	20 A	QUAD RACK RECEPT IDF J210	N	12
13	N	RACK RECEPT IDF J210	30 A	2	800 VA			360 VA			1	20 A	QUAD RACK RECEPT IDF J210	N	14
15						0 VA			360 VA		1	20 A	QUAD RACK RECEPT IDF J210	N	16
17	N	RACK RECEPT IDF J210	30 A	2			800 VA			0 VA	1	20 A	SPARE	--	18
19					0 VA			0 VA			1	20 A	SPARE	--	20
21	N	RACK RECEPT IDF J210	30 A	2		800 VA			0 VA		1	20 A	SPARE	--	22
23							0 VA			0 VA	1	20 A	SPARE	--	24
25	--	SPARE	20 A	1	0 VA			0 VA			1	20 A	SPARE	--	26
27	--	SPARE	20 A	1		0 VA			0 VA		1	20 A	SPARE	--	28
29	--	SPARE	20 A	1			0 VA			0 VA	1	20 A	SPARE	--	30
31	--	SPARE	20 A	1	0 VA			0 VA			1	20 A	SPARE	--	32
33	--	SPARE	20 A	1		0 VA			0 VA		1	20 A	SPARE	--	34
35	--	SPARE	20 A	1			0 VA			0 VA	1	20 A	SPARE	--	36
37	--	SPACE	--	--	0 VA			0 VA			--	--	SPACE	--	38
39	--	SPACE	--	--		0 VA			0 VA		--	--	SPACE	--	40
41	--	SPACE	--	--			0 VA			0 VA	--	--	SPACE	--	42

LOAD TYPE KEY:
N= NON CONTINUOUS — M=MECH EQUIP — TOTAL A: 3400 VA 30 A
R=RECEPTACLE — R=RECEPTACLE — TOTAL B 3400 VA 30 A
L=LIGHTING — K=KITCHEN — TOTAL C: 2320 VA 19 A

LOAD TYPE	CONNECTED	DEMAND FACTOR	ESTIMATED	PANEL TOTALS		
N	6960 VA	100.00%	6960 VA			
R	2160 VA	100.00%	2160 VA			
				TOTAL LOAD:	9120 VA	25 A
				TOTAL DEMAND LOAD:	9120 VA	25 A

PANEL: 2R1A

LOCATION: ELECTRICAL J126 — VOLTAGE/PHASE: 120/208V,3PH,4W — FED FROM: 2R1
FLOOR: FIRST FLOOR — BUS AMPS: 100 A — RATING 10kAIC
MOUNTING: SURFACE — MAIN BREAKER: MLO

CKT	TYPE	LOAD	BKR/POLE		A	B	C	A	B	C	BKR/POLE		LOAD	TYPE	CKT
1	R	REC R.R., EXT. J105 - J107	20 A	1	720 VA			900 VA			1	20 A	CONT REC RM J108	R	2
3	N	PPR TWL RM J106 J107	20 A	1		700 VA			540 VA		1	20 A	NON CONT REC RM J108	R; C	4
5	N	HAND DRYER J107	20 A	1			1700 VA			1080 VA	1	20 A	FLR FF J109	P	6
7	N	HAND DRYER J107	20 A	1	1700 VA			400 VA			1	20 A	SHORT THROW PROJ RM J109	R	8
9	N	HAND DRYER J106	20 A	1		1700 VA			630 VA		1	20 A	AV REC RM J109	R	10
11	N	HAND DRYER J106	20 A	1			1700 VA			1080 VA	1	20 A	CONT REC RM J109	R	12
13	R	CONV REC RM J100-2	20 A	1	720 VA			900 VA			1	20 A	CONV REC RMS J110-1-2	R	14
15	R	CONV REC RM J100-2	20 A	1		720 VA			180 VA		1	20 A	FRIDGE RM J110-2	R	16
17	C	FLAT PANEL DISPLAYS RM J100-2	20 A	1			600 VA			1400 VA	1	20 A	DED REC COPIER RM J108	R	18
19	C	SHORT THROW PROJ J108-1	20 A	1	200 VA			1400 VA			1	20 A	DED REC COPIER RM J108	R	20
21	R	NON CONT REC RM J108-1	20 A	1		540 VA			1080 VA		1	20 A	CONT REC RM D.S.P.S.-1 J108-1	R	22
23	R	SCANNER REC RM J108-1	20 A	1			180 VA			1000 VA	1	20 A	DED REC SHREDDER RM J108	R	24
25	R	FF COMPUTER LAB J108-1	20 A	1	1080 VA			1000 VA			1	20 A	DED REC SHREDDER RM J108	R	26
27	R	FF COMPUTER LAB J108-1	20 A	1		720 VA			0 VA		1	20 A	SPARE	--	28
29	R	FF COMPUTER LAB J108-1	20 A	1			720 VA			900 VA	1	20 A	CLOCK REC J101-104,J112	C	30
31	R	FF COMPUTER LAB J108-1	20 A	1	720 VA			1620 VA			1	20 A	CLCK J108-110,J119-121,J129-130	C	32
33	C	MOTORIZED GLASS DOOR J108	20 A	1		200 VA			180 VA		1	20 A	DED REC WATER FOUNTAIN J101	R	34
35	C	FLAT PANEL DISPLAY RM. J108	20 A	1			200 VA			0 VA	1	20 A	SPARE	--	36
37	--	SPARE	20 A	1	0 VA			0 VA			--	--	SPACE	--	38
39	--	SPARE	20 A	1		0 VA			0 VA		--	--	SPACE	--	40
41	--	SPARE	20 A	1			0 VA			0 VA	--	--	SPACE	--	42

LOAD TYPE KEY:
N= NON CONTINUOUS — M=MECH EQUIP — TOTAL A: 11360 VA 99 A
R=RECEPTACLE — R=RECEPTACLE — TOTAL B 7190 VA 60 A
L=LIGHTING — K=KITCHEN — TOTAL C: 10560 VA 92 A

LOAD TYPE	CONNECTED	DEMAND FACTOR	ESTIMATED	PANEL TOTALS		
N	7500 VA	100.00%	7500 VA			
R	16630 VA	80.07%	13315 VA			
C	3900 VA	125.00%	4875 VA			
P	1080 VA	100.00%	1080 VA			
				TOTAL LOAD:	29110 VA	81 A
				TOTAL DEMAND LOAD:	26770 VA	74 A

PANEL LEGEND

2M1	2K1	2R1
2T1	2K1A	2R2
2T2	2R1A	-

architecture
www.hpiarchitecture.com
115 22nd street
Newport Beach, CA 92663
o: 949. 675. 6442

CONSULTANTS
P2S ENG
Long Beach | Los Angeles
San Diego San Jose
p2sinc.com

REGISTERED PROFESSIONAL ENGINEER STEVEN C. MUSSER No. E19817 EXP. 03/31/20 ELECTRICAL STATE OF CALIFORNIA
SIGNED: 08/06/18

SEALS / APPROVALS

LICENSED ARCHITECT LAWRENCE A. FRAPWELL NO. C 11360 Ren. 6-30-19 STATE OF CALIFORNIA

IDENTIFICATION STAMP
DIV. OF THE STATE ARCHITECT
FILE: 30-C2
A# 04-116810
AC ________ FLS ________ SS ________
DATE ________________

PROJECT TITLE
JOHNSON STUDENT CENTER
INCREMENT 2
1530 W 17TH ST SANTA ANA CA 92706

RANCHO SANTIAGO
Community College District

SUBMITTALS		
#	DATE	DESCRIPTION
	05/18/18	HEALTH DEPT. SUBMITTAL
	08/13/18	DSA FINAL SUBMITTAL
	09/24/18	ADDENDUM #3
	10/08/18	ADDENDUM #5
	10/15/18	ADDENDUM #6
	10/22/18	ADDENDUM #8

PROJECT IDENTIFICATION 7411
THESE DRAWINGS ORIGINALLY CREATED IN AUTODESK REVIT V. 2016
THE ORIGINAL SIZE OF THIS SHEET IS 30" X 42".

DRAWN BY C Naranjo

CHECKED BY C S Musser

THESE DRAWINGS AND SPECIFICATIONS ARE THE PROPERTY AND COPYRIGHT OF THE ARCHITECT AND SHALL NOT BE USED ON ANY OTHER PROJECT OR LOCATIONS EXCEPT AS DESCRIBED ON THE DRAWINGS, WITHOUT WRITTEN AGREEMENT WITH THE ARCHITECT.
© HILL PARTNERSHIP INC. 2015

SHEET TITLE
PANEL SCHEDULES

SHEET NUMBER
E0.11

100% CONSTRUCTION DOCUMENTS

10/17/2018 7:29:41 AM C:\Revit Files\J7411_R16_MEPFA_Central_Melissa Jackson.rvt

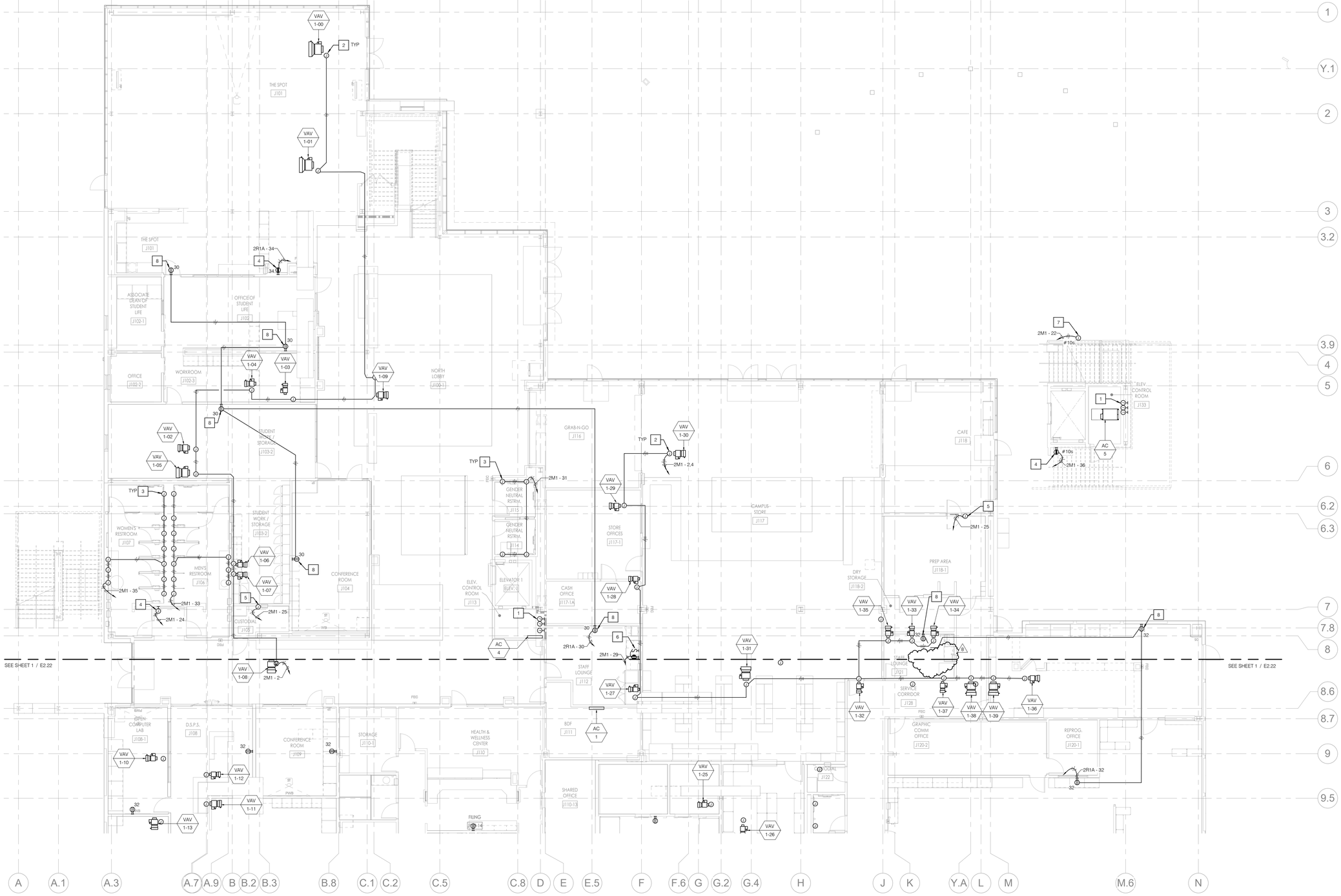

NOTES

1. PROVIDE THE FOLLOWING FOR EACH ELEVATOR AT MACHINE ROOM:
   A) ONE 3-POLE, 480V CIRCUIT FROM MAIN SWITCH BOARD 'MSB'. CIRCUIT EACH ELEVATOR WITH LOCAL DISCONNECT SWITCH PER SINGLE LINE DIAGRAM E5.01.
   B) ONE 30A FUSED DISCONNECT SWITCH WITH 20A FUSES FOR ELEVATOR CAR POWER AND LIGHTING.
   C) ONE 30A FUSED DISCONNECT SWITCH WITH 20A FUSES FOR ELEVATOR MACHINE ROOM AND PIT FOR RECEPTACLES AND LIGHTING.
2. PROVIDE 1P-20A, 120V CIRCUIT FOR VAV BOXES WITH LOCAL THERMAL OVERLOAD DISCONNECT SWITCH.
3. PROVIDE CONNECTION TO PLUMBING AUTOMATIC SENSOR. REFER TO PLUMBING DRAWINGS FOR SENSOR TYPE.
4. PROVIDE 120V CONNECTION TO SERVE DRINKING FOUNTAIN.
5. PROVIDE 120V CONNECTION TO SERVE TRAP PRIMER.
6. PROVIDE 120V, 1P, 20A RECEPTACLE TO SERVE GARBAGE DISPOSAL. PROVIDE 3/4"C - 2#12, 1#12GND AND MOTOR RATED TOGGLE SWITCH FOR CONTROL. LOCATE SWITCH ADJACENT TO SINK ABOVE COUNTER.
7. PROVIDE 120V CONNECTION TO SERVE DRY SUMP PIT. REFER TO PLUMBING DRAWINGS, DETAIL 6/P6.02 FOR ADDITIONAL INFORMATION.
8. PROVIDE 20A, 120V, 1P RECESSED MOUNTED RECEPTACLE SETBACK FOR CLOCK APPLICATION. FIELD VERIFY EXACT LOCATION PRIOR TO INSTALLATION.

GENERAL NOTES

1. REFER TO MECHANICAL EQUIPMENT CONNECTION SCHEDULE ON SHEET E0.02 FOR CIRCUITING INFORMATION.

NORTH

SOUTH

N

FIRST FLOOR AUXILIARY PLAN - NORTH SCALE 1/8" = 1'-0" | 1

P2S: 7411

architecture
www.hpiarchitecture.com
115 22nd street
Newport Beach, CA 92663
o: 949. 675. 6442

CONSULTANTS

P2S ENG

Long Beach | Los Angeles
San Diego San Jose

p2sinc.com

SEALS / APPROVALS

IDENTIFICATION STAMP
DIV. OF THE STATE ARCHITECT
FILE: 30-C2
A# 04-116810
AC _____ FLS _____ SS _____
DATE _____

PROJECT TITLE

JOHNSON STUDENT CENTER
INCREMENT 2
1530 W 17TH ST SANTA ANA CA 92706

RANCHO SANTIAGO Community College District

SUBMITTALS

#	DATE	DESCRIPTION
	05/18/18	HEALTH DEPT. SUBMITTAL
	08/13/18	DSA FINAL SUBMITTAL
	09/24/18	ADDENDUM #3
	10/08/18	ADDENDUM #5
	10/15/18	ADDENDUM #6
	10/22/18	ADDENDUM #8

PROJECT IDENTIFICATION 7411

THESE DRAWINGS ORIGINALLY CREATED IN AUTODESK REVIT V. 2016

THE ORIGINAL SIZE OF THIS SHEET IS 30" X 42".

DRAWN BY C Naranjo

CHECKED BY C.S Musser

THESE DRAWINGS AND SPECIFICATIONS ARE THE PROPERTY AND COPYRIGHT OF THE ARCHITECT AND SHALL NOT BE USED ON ANY OTHER PROJECT OR LOCATIONS EXCEPT AS DESCRIBED ON THE DRAWINGS, WITHOUT WRITTEN AGREEMENT WITH THE ARCHITECT.
© HILL PARTNERSHIP INC. 2015

SHEET TITLE

FIRST FLOOR AUXILIARY PLAN - NORTH

SHEET NUMBER

E2.21

100% CONSTRUCTION DOCUMENTS

SANTA ANA COLLEGE
JOHNSON STUDENT CENTER (INCREMENT 2)

SECTION 281300 – ACCESS CONTROL

PART 1 - GENERAL

1.1 SUMMARY

A. Contractor shall provide all materials, hardware, software, fabrication, coordination efforts and installation, programming, testing, documentation, and training in conformity with manufacturers' documentation, specifications contained herein, and applicable Codes and authorities having jurisdiction for the implementation of a complete Access Control System (ACS).

B. Documents do not show or list every item to be provided. When an item not shown or listed is clearly necessary for proper installation and operation of the equipment and systems, Contractor shall provide, install, test and certify the item at no increase to contract price.

C. Contractor shall be responsible for coordination of all access control system related installation issues with any and all stakeholders, District IT Department, and other trades. This includes programming of all software and hardware, connections/interfaces. Coordination of conduit/pathways, and power requirements for security devices directly with electrical contractor when necessary to complete installation.

D. The system envelope will have access control functionality primarily at the perimeter entrance doors, elevator lobbies and other specific doors and areas as shown on the Design Drawings. Interior spaces will include secure access to the corridors, main cluster entry doors in the buildings, elevator cab readers and the receiving dock. The ACS and VSS shall functionally integrate, thus allowing a visual image of a perimeter breach where cameras are placed. An example would be a "door forced open" alarm where the associated camera would show a visual image of the door in alarm condition.

E. Access controlled doors and perimeter "exit doors" will have door position switches that seal off the perimeter during off hours. If this perimeter is breached it will cause an alarm that will indicate a security breach at the monitoring station. In case of an emergency the access-controlled doors can be "locked down".

F. The perimeter doors will be unlocked during regular hours and controlled by credentials and schedules for off hours access. The inside areas shall be key controlled as defined by District. The keys shall be used for doors that need to be secure but not electronically controlled.

G. The Access Control system will be capable of fully supporting Elevator Cab Card readers which can restrict access to certain floors based on programmed access levels. If an individual does not possess a legitimate credential or access level, the car will not move, or will return to the ground floor. It will be the responsibility of the Contractor to coordinate with the Elevator Control Company for the proper installation and control of this functionality and of cable requirements within the elevator travel cable.

H. Alarm signals from the system shall register at the designated monitoring station as an “alarm”. The alarm signal shall include the time, date, location, and ID number of the alarm point.

I. Contractor shall be responsible for the programming and testing of the dual credentialed key-fobs provided as part of this project. Contractor shall test key-fobs on all portals included in this project and a sample of portals, coordinated with the District, within the campus.

1.2 PROJECT SCOPE

A. Contractor shall be responsible for fully implementing the functions described in the specifications and shown on the Design Drawings and Specification Documents, which may not show or list every item required or to be provided. When an item not shown or listed is clearly necessary for proper installation and operation of equipment or the system(s), Contractor shall provide this equipment, components, or software at no additional cost to the District.

B. Provide and submit all required documentation as outlined in the Submittals section and referenced elsewhere within this specification, including written notice prior to demonstration for Final Acceptance.

C. Contractor shall connect ACS panels to the existing Campus Access Control System (Genetec Synergis Security Center). Contractor shall coordinate with the District for connectivity and methods for connection to the existing ACS.

1.3 REFERENCES

A. Published specifications, standards, tests, codes, or recommended standards of trade, industry, or governmental organizations apply to work in these Sections, including:
1. ADA - Americans with Disabilities Act
2. ASCII - American Standard Code for Information Interchange
3. ASTM - American Society for Testing and Materials
4. EIA - Electronic Industry Association
5. NEMA - National Electrical Manufacturers’ Association
6. NFPA - National Fire Protection Association
7. NEC – National Electrical Code
8. CEO - California Electrical Code
9. UL - Underwriters Laboratories, Inc.
10. ASIS – American Society for Industrial Security

B. Electronic devices radiating “RE” energy shall comply with Federal Communication Commission regulations, particularly Part 15, and shall meet minimum Class “B” requirements. Provide FCC certificate numbers indicating that the FCC has approved products.

1.4 QUALITY ASSURANCE

A. A nationally recognized test laboratory shall list all equipment supplied where applicable.

B. All equipment and accessories to be the product of a manufacturer regularly engaged in its manufacture.

C. All items of a given type shall be the products of the same manufacturer.

D. All items shall be new and of the latest technology and version-level; no discontinued models or products are acceptable.

E. No Beta products shall be offered or will be accepted.

F. The manufacturer, or their Authorized Representative, shall confirm that within 100 miles of the project site there is an established agency which:
   1. Provides a full-Service Operation and stocks a full complement of replacement parts.
   2. Offers service during normal working hours as well as emergency service on all equipment to be furnished.
   3. Will supply parts and service without delay and at reasonable cost.

G. Contractor shall be a fully certified Integrator by Genetec to sell, install, and maintain all system, subsystems, components, and software required in the United States.

H. Contractor shall have at least five (5) years' experience designing, selling, installing and maintaining the Genetec access control system, and shall possess all applicable Contractor licenses.

I. Contractor shall be capable of performing service or maintenance work on these specified and/or accepted systems.

1.5 SUBMITTALS

A. Provide the following Shop Drawings and Data Sheet submission to District at the start of the project: Data Sheet submittals indicating Manufacturers name, model number, and a full description of the component and UL Listing for all equipment supplied. Indicate or high light all model numbers of equipment to be reviewed.

B. Shop Drawing Submittals complete with point-to-point wiring diagrams for all connected components, Fire Alarm Interface connections, device location floor plans, device schedules, block/riser diagrams, mounting details for all mounted components, calculations, etc. Provide dimensioned elevation, mounting, and wiring details for all consoles, racks, control panels, and fabricated equipment being supplied under this section.

C. Training Program documentation, including name and qualifications of trainer(s), schedule of training, curricula, and written training materials.

D. Partial or "Typical" drawings will not be accepted. All drawings shall be done in CAD.

E. Provide a complete Bill of Materials with quantities of equipment supplied.

F. Provide an Access Control List of devices requiring IP addresses. These addresses shall be programmed into all connected devices, with this list used to program network switches restricting network connections to approved devices only.

G. Provide a narrative of proposed programming, including device names and descriptions, timings, sequence of operations, etc.

H. Service information, including address of nearest representative. Provide written approval from each manufacturer affirming that Contractor is certified and approved for systems installation and service for all systems in this Section.

I. Provide the following subsequent to the Shop Drawings and Data Sheet submission the following items;
   1. Provide all Test Reports as indicated in Section 3.03 when completed in a timely manner for approval.
   2. Provide complete Operation and Maintenance manuals for all approved equipment installed. This O&M manual shall be available for Training classes and be part of the Training materials. This document manual must be approved and available for use in Training and Final Acceptance.
   3. Provide all documentation referenced in under the Warranty section referenced within this specification, and provide Warranty Certificate indicating customer name, site address, system under warranty, date warranty begins and ends, service department contact information and manufacturer contact information.

J. Submittals must be complete, as in all items listed above under Shop Drawings and Data Sheets shall be submitted at one time together as a package. Incomplete or partial Shop Drawings and Data Sheets submittals shall be rejected.

K. Security Consultant and District reserve the right to reject any submittals determined to be incomplete. Operation and Maintenance manual shall be submitted prior to demonstration for Final Acceptance and Training.

1.6 SUBSTITUTIONS

A. All materials and equipment shall conform to these specifications. No substitute materials may be used, unless previously accepted in writing by the District and/or the Security Consultant.

B. Manufacturers listed as acceptable are normally engaged in the type of work specified. The listing of equipment part numbers or particular types of systems by specific manufacturers is to establish the performance, quality and parameters of the equipment and material specified.

1.7 PRODUCT DELIVERY, STORAGE AND HANDLING

A. All equipment provided shall be new, not used, and shall be shipped in original packages to prevent damage or entry of foreign matter. All handling shall be in accordance with manufacturers' recommendations. Contractor shall provide any required protective covering during construction.

B. The Contractor shall replace, at no expense to District, equipment and material damaged during storage and installation as directed by District.

C. Products delivered to the job site in racks and consoles shall be protected from dust, dirt and foreign matter. All racks and consoles shall be protected from dents, bumps and scratching.

1.8 WARRANTY

A. The Contractor and manufacturer(s) shall warranty all equipment, materials and installation labor for a minimum of two (2) years from the date of written notification of Acceptance by District.

B. During the Warranty Period, upon notification of a problem by District, Contractor shall ensure that a competent and qualified field service technician arrives on site to correct the problem within 24 hours of notification. If a problem can be corrected remotely to District's reasonable satisfaction, the on-site arrival time commitment shall be waived.

C. At least sixty (60) calendar days prior to expiration of Warranty, Contractor shall provide District with post-Warranty maintenance contract proposals. The terms and condition of any such post-Warranty program shall be consistent with those offered to the provider's most favored customer(s).

PART 2 - PRODUCTS

2.1 MANUFACTURERS

A. Basis-of-Design Manufacturer: Genetec Inc., 2280 Alfred-Nobel Blvd., Montreal, Quebec, Canada H4S 2A4; telephone: 866-684-8006, Web site: www.genetec.com.

B. This project is an extension of an existing Access Control System in use on the Campus. All new devices shall be installed and programmed into this existing system.

C. No Substitutions shall be permitted.

2.2 SYSTEM OVERVIEW

A. ACS shall operate on a dedicated security system network shared with the video surveillance system, forming the foundation of the Integrated Security System. This dedicated security network does not connect with the business network; however, this equipment is co-located in the same communications closet as the business network equipment, possibly in the same rack. Rack space shall be provisioned for this equipment in the Communications Infrastructure design within the Communications Closets. The specifications for this dedicated security system network shall be found in Section 28 23 00 Video Surveillance System.

B. The Access Control Block Riser Drawing indicates access control system components wall mounted in the Communications Closets indicating a connection to a local Category 6 Patch

panel or reference a network port connection for this equipment. Contactor shall provide all fiber optic and Category 6 patch cords to connect the access control equipment to the dedicated security network.

C. The Video Surveillance System Block Riser shall indicate the Ethernet network switches connecting to the fiber optic backbone which is part of the Structured Cabling System, an engineered and certified system provided and installed by the Communications contractor. Contractor shall not provide or install any cabling or fiber for the Security System Network except the patch cords as indicated.

D. Contractor shall incorporate all requirements of the dedicated network electronics as outlined in the 282300 Video Surveillance Specifications for materials, labor and required testing including all required submissions of test documentation as part of the access control system and/or the Integrated Security System.

E. The access control system shall be an inter-connected group of components consisting of but not limited to the following devices:
1. Fiber optic and Category 6 patch cords
2. Access control units (ACUs)
3. Communication devices
4. Readers
5. Credentials
6. Door Contacts
7. Request to Exit devices
8. Electrified Door Hardware
9. Power Supplies
10. Other equipment as specified

F. The system shall be capable of the following functions:
1. Regulate and monitor access at system-controlled doors.
2. Control access to elevator floors and monitor elevator floor button activity.
3. Interface with a telephone entry system – phone bill and no phone bill types.
4. Monitor connected detectors or sensors (supervised and auxiliary inputs) with the ability to manually or automatically arm and disarm them.
5. Control event-initiated devices connected to system outputs, such as alarms or digital video recorders, with the ability to automatically or manually arm or disarm them.
6. Report an alarm and or supervisory condition.
7. Distribute an annunciated alarm condition via an email notification off-site.
8. Establish a hierarchy of alarm types to prioritize handling alarm conditions.
9. Maintain a comprehensive database recording all site activity.
10. Operate an optional, fully integrated photo badge and verification module allowing for a complete ID badging operation.
11. Operate an optional integrated interactive mapping application.
12. Operate an optional integrated visitor management application.
13. Operate an optional integrated guard tour application.
14. Interface with select intrusion alarm panels.
15. Offer remote system access via the Internet or a corporate intranet with an optional WEB module.
16. Provide capability of Remote Viewing and Mobile Viewing.

G. The Access Control panels shall connect to all field devices to establish a fully-functional access control system. ACS panels shall connect to the existing Genetec Access Control System utilized by the Campus.

2.3 FIELD DEVICES

A. Card Readers
1. Card Readers shall be HID Global Multiclass SE, multiformat, multifrequency, transmitting at 125Khz to support proximity, and 13.56 Mhz supporting Smartcard capability, or approved equal.
2. Standard switch mount type shall be RP40, or RPK40 with keypad, where indicated.
3. Mullion mount shall be RP15.
4. Mini mullion mount shall be RP10.
5. Refer to Architectural Door Hardware List, Specifications and Design Drawings for further details.
6. Refer to Door Detail drawings which indicate infrastructure rough in details for conduit and back boxes.
7. Refer to the Block Riser Drawings for cable and wire types used for various devices.
8. For wire and cable installation requirements, refer to the wire and cable section for details.

B. Credentials – Key Fobs
1. Credentials shall be furnished by the Contractor for this project.
2. Contractor shall provide 2000 credentials.
3. Credential type shall be coordinated with District. Credentials shall not be purchased until approved by District.
4. 500 additional un-programmed Credentials shall be provided by the Contractor for Owner use.

C. Door Contacts
1. Door alarm contacts shall be GE/Sentrol 1076 or 1076D or approved equal.
2. Door Contacts may be internal of electrified door locking hardware when a power transfer hinge is specified.
3. Color of contact shall match the door frame finish as closely as possible.
4. The contact and magnet housing shall snap-lock into a 1” diameter hole. The contact shall be SPST, where indicated on the Design Drawings. DPDT type shall be indicated where needed.
5. All contacts and inputs to the ACP shall be on a “supervised” circuit. An end of line resistor shall be installed at the alarm contact location and not at the control panel location.
6. Refer to Architectural Door Hardware List, Specifications and Design Drawings for further details.
7. Refer to Door Detail drawings which indicate infrastructure rough in details for conduit and back boxes.
8. Refer to the Block Riser Drawings for cable and wire types used for various devices.
9. For wire and cable installation requirements, refer to the wire and cable section for details.

D. Overhead Door Contact/Roof Hatch Contact

1. Surface mounted contacts shall be GE Security 2204 overhead door contact.
2. Furnish and install alarm contacts at the floor for roll up type doors and/or hatches that require wide gap surface mounted contacts.
3. The contact shall be loop type, open or closed, SPDT, 3" gap distance, with 18" flexible stainless-steel cable housing.
4. Refer to Architectural Door Hardware List, Specifications and Design Drawings for further details.
5. Refer to Door Detail drawings which indicate infrastructure rough in details for conduit and back boxes.
6. Refer to the Block Riser Drawings for cable and wire types used for various devices.
7. For wire and cable installation requirements, refer to the wire and cable section for details.

E. Request to Exit Device
1. Request to exit PIR type motion sensor shall be Allegion/Schlage SCAN II or Bosch DS160 with 1 gang trim plate.
2. Wherever possible, request-to-exit (REX) functionality should be integrated into the electrified locking hardware.
3. Where an integrated solution for request to exit is not provided or provisioned by the selected locking hardware, furnish and install a PIR type motion detector designed for request to exit applications at all locations as indicated on the Design Drawings.
4. Some doors will be monitored for door position only and may not have a reader and REX device.
5. Power input shall be 12-30 V DC/AC
6. Refer to Architectural Door Hardware List, Specifications and Design Drawings for further details.
7. Refer to Door Detail drawings which indicate infrastructure rough in details for conduit and back boxes.
8. Refer to the Block Riser Drawings for cable and wire types used for various devices.

F. Electrified Locking Door Hardware
1. Door Hardware shall be specified by the Architect and is provided and installed by the locking hardware Contractor.
2. Refer to the Architectural Door Hardware list, Index, and Door Hardware Specifications for further details.
3. Fire Rated, Panic Hardware, Electric Strikes and Magnetic locks shall be installed and wired as per manufacturer recommendations, local and other Codes, and the Authority Having Jurisdiction per door, for all doors.
4. Contractor shall coordinate with all other trades and stakeholders as required to ensure complete and proper installation and deliver a fully functional door(s) controlled or monitored by the Access Control system.
5. Security Contractor to test all functions at all access-controlled doors.
6. Refer to Architectural Door Hardware List, Specifications and Design Drawings for further details.
7. Refer to Door Detail drawings which indicate infrastructure rough in details for conduit and back boxes.
8. Refer to the Block Riser Drawings for cable and wire types used for various devices.
9. For wire and cable installation requirements, refer to the wire and cable section for details.

G. Power Supplies and Locking Hardware Power Supplies
1. Access Control peripheral devices shall be powered by Altronix, SDC, Allegion brands, or Assa Abloy brands power supplies. All power supplies shall be UL Listed.
2. Install 24VDC power supplies to power all electrically controlled door locks as required.
3. It is the responsibility of the Contractor to coordinate facility power requirements with the project electrical contractor for power connections where needed and Fire Alarm connections where needed.
4. Size all power supplies to permit simultaneous continuous-duty activation of all door locks, with an additional minimum 20% capacity on each supply. Calculate voltage drop to locks and size lock control wiring to provide proper lock operation.
5. Run individual lock power circuits from a separate fused output on Power Distribution Modules, located within the access control panel.
6. All Low Battery and AC Loss connections shall be terminated into the system for monitoring.
7. Provide Sealed Lead Acid (SLA) battery back-up sufficient for 4 hours standby plus 25 activations for all DC locks.
8. Provide a separate enclosure for the batteries if the batteries will not fit securely in power supply enclosure “right-side-up”. Do not lay batteries on their sides or ends in order to fit them into the enclosure. Do not expose wiring between the power supplies and the batteries.
9. Refer to Architectural Door Hardware List, Specifications and Design Drawings for further details.
10. Refer to Door Detail drawings which indicate infrastructure rough in details for conduit and back boxes.
11. Refer to the Block Riser Drawings for cable and wire types used for various devices.
12. For wire and cable installation requirements, refer to the wire and cable section for details.

H. Intelligent Controllers - Hardware Requirements:
1. Distributed architecture shall allow controllers to operate independently of the host. The architecture shall place key access decisions, event/action processing and alarm monitoring functions within the controllers, eliminating degraded mode operation.
2. Flash memory management shall support firmware updates and revisions to be downloaded to the system. Upgrades to the hardware and software shall occur seamlessly without the loss of database, configurations, or historical report data.
3. Intelligent Controller Board shall be Genetec Sy-EP1502 Mercury Intelligent Controller, 16MB RAM Ethernet 8In/4Out/2Rd, or approved equal.

I. Field Hardware:
1. The security management system shall be equipped with access control field hardware required to receive alarms and administer all access granted/denied decisions and support all devices and support all field devices as shown on the drawings. All field hardware shall meet UL requirements. All field hardware shall be the following:
2. Intelligent Controller Board:
   a. Genetec Sy-EP1502 Mercury Intelligent Controller, 16MB RAM Ethernet 8In/4Out/2Rd, approved equal.
3. Dual Reader Module (DRM):
   a. Genetec PW6K1R2 Sy-MR52 Mercury MR52 - 2-reader interface module (8 inputs, 6 relays, approved equal.
4. Alarm Input Module (AIM):

a. Genetec Sy-MR16IN Mercury MR16IN – 16 Input Panel, approved equal.

5. Relay Output Module (ROM):
   a. Genetec Sy-MR16OUT Mercury MR16OUT – 16 Output Panel, approved equal.
6. Cloud Link:
   a. SY-CLOUDLINK - Synergis Cloud Link with 2GB of RAM, 16GB Flash, image installed with Synergis access control firmware, four RS-485 ports, PoE, approved equal.
7. Hardware Enclosures
   a. Genetec SY-29X23ENC-KIT - Large Enclosure Kit (unassembled). 29x23 inches/73.7 x 58.4 cm enclosure, lock/key, tamper, backplate, screws for backplate, approved equal.
   b. Genetec SY-21X23ENC-KIT - Small Enclosure Kit (unassembled). 21x23 inches/53.3x58.4 cm enclosure, lock/key, tamper, backplate, screws for backplate (including for Mercury and HID modules), battery cover and tamper, approved equal.
   c. All intelligent controllers and field hardware boards shall be installed within a hardware enclosure at access control panel locations as shown in the design drawings. The security contractor shall provide, install and outfit an appropriate number of large and / or small enclosures to house all required intelligent controllers and field hardware boards required to support all access control and other security system devices.
8. Device Licenses
   a. All necessary licenses for card readers, cameras and other security system(s) devices as shown in the design drawings that require licensing to operate shall be provided, installed, and configured to provide a fully functional and operational system.

J. Fire Alarm Interface Connection
   1. Provide as required per the current code (NFPA 72), a connection from the access control system to the Fire Alarm system to respond to this input of an emergency condition as per all local and national codes, ordinances, statutes and/or rules, guidelines and directives of the governing local Authority Having Jurisdiction.
   2. Access Control shall provide, as per code, a door unlock function to unlock all doors that require this action when an active, authorized alarm signal is activated, or by direct interruption of the lock power circuit for doors in the path of egress equipped with access control and electrified door hardware.
   3. Fire Alarm interface connection shall comply with NFPA 70, 72 and National Electrical Code requirements.
   4. All Fire Alarm connections shall be included in the Shop Drawing package for review, and in the As Built Drawing set.

K. Local Door Alarm
   1. Provide door management alarms for local and remote monitoring and annunciation of the status of the doors (door prop/door held, door intrusion/door forced or secure) as indicated on the Security Device Drawings.
   2. The LDA shall be capable of operating in a “stand-alone” configuration or with an access control system, utilizing all reader technologies: i.e. proximity, weigand, mag stripe, bar code or biometrics.
   3. Local sounder (field selectable volume 96 or 103 dB @ 3 feet) shall be used to indicate both door prop/door held, and intrusion/door forced conditions after a user selectable

quiet, or access, time (0 seconds to 90 minutes) has expired. Sounder shall be incorporated into the faceplate of the LDA.

4. Form C (N/O and N/C) contacts shall be available for the following outputs: Door Contact Status, Door Prop Alarm, Intrusion/Tamper Alarm and Bypass/Key Switch Status.
5. The alarm (intrusion) contact shall change state upon the recognition of an alarm or tamper condition to alert remote monitoring equipment.
6. The unit shall remain in alarm until reset by integral key switch, remotely through a dry contact or automatically through an onboard timer (user settable from 0 seconds to 5 minutes or MANUAL).
7. An integral key switch shall be available for alarm shunt or alarm reset and be incorporated into the faceplate of the LDA.
8. A Bi-Color status LED shall be incorporated into the faceplate of the LDA.
9. A remote LED output shall be provided to control a bi-color LED that follows the actions of the faceplate mounted LED.
10. Inputs shall include a N/C Dry Contact for the door, Voltage Sense (12-24 VAC/DC) to monitor electric lock voltages and a N/O or N/C Dry Contact Shunt Input.
11. The following timers shall be user settable: Auto-reset, Alarm delay, Silent time and Shunt Delay.
12. The LDA shall be mounted in the wall adjacent to the monitored door at 42" above finished floor. The unit shall mount in a standard 2 gang (3 gang for rim cylinder key switch model) electrical box with a minimum depth of 2 ½".
13. Refer to Architectural Door Hardware List, Specifications and Design Drawings for further details.
14. Refer to Door Detail drawings which indicate infrastructure rough in details for conduit and back boxes.
15. Refer to the Block Riser Drawings for cable and wire types used for various devices.
16. For wire and cable installation requirements, refer to the wire and cable section for details.
17. The LDA shall be Designed Security, Inc. Model ES4200-K1-T1, or Kouba Systems LDA9602.

L. Duress/Panic Button

1. Under counter/desk door release with momentary pushbutton, surface mount, black abs plastic box with two mounting ears.
2. S.P.D.T. contacts, rated 4 amps @ 28 VDC.
3. UL Listed and C.S.A. certified components.
4. Duress button shall be from Alarm Controls, Model TS-18.

2.4 WIRE AND CABLE

A. Cabling shall be West Penn, Belden, Mohawk, Windy City or SmartWire.

B. All cabling shall be plenum (CMP) rated.

C. All Cables shall be U.L. Listed, and appropriate for the application.

D. Contractor shall be responsible for providing proper cable supports where conduit, cable trays and/or cable paths are not provided. (Rods and J-Hooks) Cable will be run free air above ceiling

areas with plenum rated cable. Firewall penetrations must be coordinated with the General Contractor.

E. Contractor shall follow the manufacturer's recommendation for cabling. Wire and Cable sizes, number of conductors, shielding, or other data listed in this specification or shown on Drawings are a guide to the correct product required to achieve a working system and represent minimum acceptable equipment. Cabling shall be sized and installed according to local electrical code requirements.

F. Wire splices are not permitted in any circuit. If a splice cannot be avoided, the splice work shall be submitted for review and approval prior to installation of cable run affected. The submittals shall include the following details; the reason for the splice, a detailed drawing of the splice, all wire types involved, termination details, physical protection, and protection from the elements must be submitted.

G. All Cable shall be run in unbroken lengths of 1000 feet or less. When Cable cannot be run in unbroken lengths due to Cable spool limitations over 1000 feet, splices shall be made in junction boxes with terminal blocks or terminal strips and fork spade lugs. All splices and junction boxes shall be clearly marked on the final drawings.

H. Cables are to be shielded as necessary with drain wires properly terminated and grounded. Use proper grounding practices to eliminate ground loops and terminate drain wires as factory recommends preventing unwanted voltages and electrical noise from degrading system performance.

I. Contractor shall utilize existing pathways, conduit and cable trays were applicable. Any cabling or raceway exposed to weather shall be rated for that use.

J. All 12 or 24VDC power cabling shall be of stranded construction. For connections requiring pressure captive connection, wire shall be tinned prior to insertion into pressure connectors.

K. All Cable shall be labeled at origin and termination, referencing to a master legend schedule as shown on submittal Drawings.
   1. Labeling and any splice locations shall be noted on as-built Drawings.
   2. All Labels shall be done using machine generated cable tags in the "flagged" position.
   3. Hand written labels are not acceptable.

L. Wiring shall be grouped and harnessed to facilitate access to all equipment, as well as maintenance and replacement of equipment.

M. Use of Velcro cable management is specified. Use of tie wraps/zip ties for cable bundle management is not permitted.

PART 3 - EXECUTION

3.1 GENERAL REQUIREMENTS

A. Systems shall be complete and operational in all respects.

B. The Contractor shall furnish and install all equipment necessary to build the Integrated Security System as referenced herein

C. All wall, floor, and ceiling penetrations, regardless of fire rating, must be properly sleeved with conduit and properly sealed using approved fire stopping materials and sealants.

D. All security equipment, junction boxes, terminal cans, etc. installed in publicly accessible areas shall be installed utilizing tamper proof mounting hardware. Contractor shall provide a minimum of 2 driver bits or hand tools for each type and size of security fastener provided.

E. Contractor shall provide seismic restraint for all equipment, including equipment racks, consoles, etc.

3.2 PROGRAMMING

A. Contractor shall provide initial programming for all applicable systems. Contractor programming shall include, but not be limited to:
   1. English-language description of each alarm location.
   2. Programming of the head-end equipment.
   3. Programming of Access Control Software.
   4. Integration to the Video surveillance system.

B. Contractor shall submit to District for the review, prior to work being initiated, the proposed programming, including device names and descriptions, timings, sequence of operations, etc.

C. Upon District's request, the Contractor shall reprogram each system one time during the Warranty Period at no additional cost. At no additional charge, the Contractor shall update the system software to the most recent version available at the time of the reprogram.

3.3 TESTS AND REPORTS

A. The Contractor shall perform system tests using personnel who have attended a manufacturer's training school for installation and testing of the systems as described herein. The Contractor shall perform testing with the test instruments as specified/directed by the manufacturer.

B. Testing by means other than the manufacturer's procedures will not be acceptable unless agreed to in advance in writing by District, Security Consultant and the equipment manufacturer.

C. Upon completion of the installation of the Security Systems, the Contractor shall submit written reports including, but not limited to, the following information:
   1. A complete list of all equipment installed, including serial numbers of major components.
   2. Certification that all equipment is properly installed, programmed, functional, 100% operational, and in conformance with contract Specifications and Drawings.
   3. Test reports of all access control system cable infrastructure, tested devices, and equipment operation to indicate the system is substantially complete and ready for demonstration.
   4. Test technician's name, company and date of test.

D. Following review of the test report(s) by District, the Contractor shall perform a test of Security System equipment in the presence of District and the Consultant. Test(s) shall include performance tests of all equipment and material required by the contract. The Contractor shall be responsible for all additional costs to District if retesting is required. At a minimum, perform tests to demonstrate that:
   1. All systems operate normally and are free from grounding problems and open circuits.
   2. Systems operate properly on battery backup.
   3. All software functions properly as specified, and all equipment is fully programmed.

E. Sixty days prior to expiration of Warranty, Contractor shall retest all systems as described herein, and submit a test report of findings. All items covered by Warranty shall be corrected immediately. The Warranty shall remain in effect until the Contractor corrects 100% of defective items.

3.4 AS-BUILT DRAWINGS

A. The Contractor shall maintain a complete set of prints of contract Drawings on-site as the work on the Access Control System is being completed. As work is installed, Contractor shall record all installation details and correct location of work including all critical dimensions.

B. Upon completion of the project, Contractor shall provide all as built information as CAD Drawings (.dwg) and PDF files and submit to District for review. No hand-drawn as-built drawings shall be accepted.

C. The Contractor shall provide four (4) sets of As-built Drawings, plus one (1) set of CAD disks, to District. One (1) additional complete set shall remain on the job site secured on the wall adjacent to the control panels at the head end.

3.5 TRAINING AND EXTRA STOCK

A. The Contractor shall provide a minimum of four (4) copies of Operation and Maintenance manuals for all equipment furnished under the Security Systems sub-sections. These manuals are to be available for training.

B. Provide a minimum of ten (10) hours of scheduled training for the equipment furnished under this Section, including programming, operation, service, and maintenance. Two (2) hours shall be dedicated to field component review with the facilities staff. The other eight (8) hours shall be dedicated to operator training with the minimum training objectives listed below. Training shall be conducted at a District-approved training lab with multiple workstations to allow operators to navigate and follow the instructors “screen projected” navigation and instructions. The District shall provide a computer lab for this purpose, as long as it is coordinated in advance with the District Representative. Screen recording software shall be used to record the training in real time. The final screen recording file shall be provided to the District Representative.

C. Training Content shall include the following at a minimum;
   a. Describe the Security Desk interface
   b. Describe the navigation process and the system features and modules

c. Perform basic access control monitoring tasks
d. Creating customized monitoring tasks
e. Perform investigation tasks
f. Export video & snapshots related to access control events
g. Perform cardholder, visitor and credential management
h. Analyze access denied events using the access troubleshooter tool
i. Execute Hot Actions from the Security Desk
j. Create and save public and private tasks
k. Launch Security Desk Video Tasks
l. Control PTZ Cameras, Fixed Cameras, Digital Zoom
m. Export Video, Snapshots & Video Reports
n. Execute Hot Actions from the Security Desk
o. Control Monitors or Display Walls Using the Remote Task
p. Manage Alarms & Threat Levels in Security Desk
q. Perform Video Blocking Based on User Level
r. Customize Security Desk Tasks & Options

D. Training shall be performed by engineers or technicians highly skilled in the systems and certified by manufacturer as qualified to train in the particular systems.

E. Training shall be conducted at dates and times directed by the District's representative. Training shall be provided for all security staff personnel and system end-users.

F. District, prior to release of retention compensation, shall require verification of completion of training.

3.6 DISTRICT IT REQUIREMENTS

A. Contractor shall coordinate with the IT department (IT) for all network and telecom connections to keep within the level and consistency of workmanship quality, materials selection and installation methods for all work performed in any Telecommunications Room (TR). Security Contractor shall request an IP address table from the IT department (IT) for all devices requiring an IP address. The address table must be approved prior to deploying and programming devices and a Report submitted for review at demonstration of Final Acceptance.

END OF SECTION 281300

SAC Johnson Student Center - Training and Demonstration Spec Revision

Food Service: 114000-3.4-A4

Provide a minimum of 4 hours of maintenance and proper operations training for the various food service equipment under this specification. Provide an agenda outline and M&O manual at least two weeks before the training to allow District Representative to comment, add, or delete training items. Digitally record field training and provide the electronic file as part of closeout documentation. Ensure the training is audible and loud.

VFD: 230549-3.2-B3

Provide an agenda outline and M&O manual at least two weeks before the training to allow District Representative to comment, add, or delete training items. Digitally record field training and provide the electronic file as part of closeout documentation. Ensure the training is audible and loud.

Condensing Boilers: 235216-3.7-A

Provide an agenda outline and M&O manual at least two weeks before the training to allow District Representative to comment, add, or delete training items. During training, ensure the controls contractor is in attendance to discuss field control components. Digitally record field training and provide the electronic file as part of closeout documentation. Ensure the training is audible and loud.

Custom Air Handlers: 237416-3.9-A

Provide an agenda outline and M&O manual at least two weeks before the training to allow District Representative to comment, add, or delete training items. During training, ensure the controls contractor is in attendance to discuss field control components. Digitally record field training and provide the electronic file as part of closeout documentation. Ensure the training is audible and loud.

Split System AC: 238126-3.5-A

Provide an agenda outline and M&O manual at least two weeks before the training to allow District Representative to comment, add, or delete training items. During training, ensure the controls contractor is in attendance to discuss field control components. Digitally record field training and provide the electronic file as part of closeout documentation. Ensure the training is audible and loud.

Electrical Power Monitoring and Control: 260913-3.6-A2

Provide an agenda outline and M&O manual at least two weeks before the training to allow District Representative to comment, add, or delete training items. Digitally record field training. For software training, digitally record GUI screen actions and audio. Ensure the training is audible and loud. Provide the electronic file as part of closeout documentation.

Distributed Lighting Control: 260923-3.2-C

Provide a minimum of eight (8) hours of training for the equipment furnished under this Section, including programming, operation, service, and maintenance. Two (2) hours shall be dedicated to field component review with the facilities staff. The other six (6) hours shall be dedicated to operator training. Training shall be conducted at a District-approved training lab with multiple workstations to allow operators to navigate and follow the instructors “screen projected” navigation and instructions.

The District is able to provide a computer lab for this purpose, as long as it is coordinated in advance with the District Representative. Screen recording software shall be used to record training in real time during the training with clear audio. The final screen recording file shall be provided to the District Representative. Provide an agenda outline and M&O manual at least two weeks before the training to allow District Representative to comment, add, or delete training items.

Central Battery Equipment: 263323-3.4-A

Provide an agenda outline and M&O manual at least two weeks before the training to allow District Representative to comment, add, or delete training items. Digitally record field training. Ensure the training is audible and loud. Provide the electronic file as part of closeout documentation.

A/V Equipment: 274116-3.4-B

Provide a minimum of six (6) hours of training for the equipment furnished under this Section, including programming, operation, service, and maintenance. Two (2) hour shall be dedicated to field component review with the facilities staff. The other four (4) hours shall be dedicated to Utelogy operator training. Screen recording software shall be used to record training in real time during the training with clear audio. The final screen recording file shall be provided to the District Representative. Provide an agenda outline and equipment M&O manual at least two weeks before the training to allow District Representative to comment, add, or delete training items.

Wireless Clock System: 275313-3.6-B

Provide an agenda outline and M&O manual at least two weeks before the training to allow District Representative to comment, add, or delete training items. Digitally record field training. Ensure the training is audible and loud. Provide the electronic file as part of closeout documentation.

Fire Alarm System: 283100

Provide an agenda outline with the “as-built” sequence of operations and equipment M&O manual at least two weeks before the training to allow District Representative to comment, add, or delete training items. Digitally record field training. Ensure the training is audible and loud. Provide the electronic file as part of closeout documentation.

Attachment 3

PRE-BID CLARIFICATION ("PBC") FORM
(ALL questions to be submitted on this form ONLY)

PBC # *(RSCCD USE ONLY)*: 169

PROJECT NAME:	RFP #1819-224 Johnson Student Center at Santa Ana College		
PROJECT NUMBER:	3035	DSA NUMBER:	Demolition, #04-116810 INC 1 and INC 2
EMAIL:	**FacilitiesRFP@rsccd.edu**		

DATE:	10/09/2018		
FROM:	S.Monsen - McCarthy	EMAIL:	SMonsen@McCarthy.com
SPECIFICATION NUMBER:	211313	DRAWING NUMBER:	

REQUESTED CLARIFICATION:

Increment #2 - Specification 211313-1.06-C states that 15 sprinklers in addition to what is shown on the drawings are to be provided within the base bid, and section 211313-1.11-B states that 25 additional sprinklers are to be provided. Please clarify which quantity is correct.

RESPONSE TO CLARIFICATION, **SUBMITTED AS PART OF AN ADDENDUM**:

Provide the allowance for 25 additional fire sprinklers per section 211313-1.11-B.

RESPONSE PROVIDED BY:	**Ron Mudry, Mudry & Associates**	DATE:	**Oct. 12, 2016**

Attach additional numbered sheets as necessary; however, only one (1) request shall be contained on each submitted form.

Attachment 3

PRE-BID CLARIFICATION ("PBC") FORM
(ALL questions to be submitted on this form ONLY)

PBC # *(RSCCD USE ONLY)*:	170

PROJECT NAME:	RFP #1819-224 Johnson Student Center at Santa Ana College		
PROJECT NUMBER:	3035	DSA NUMBER:	Demolition, #04-116810 INC 1 and INC 2
EMAIL:	**FacilitiesRFP@rsccd.edu**		

DATE:	10/11/2018		
FROM:	S.Monsen - McCarthy	EMAIL:	SMonsen@McCarthy.com
SPECIFICATION NUMBER:	274116	DRAWING NUMBER:	

REQUESTED CLARIFICATION:

Increment #2 - Specification Section 274116
•Please confirm that flat panel displays are contractor furnished, contractor installed

RESPONSE TO CLARIFICATION, **SUBMITTED AS PART OF AN ADDENDUM**:

All flat panel displays are CFCI.

RESPONSE PROVIDED BY:	Jeremy Birch, CTS (PlanNet)	DATE:	10/12/18

Attach additional numbered sheets as necessary; however, only one (1) request shall be contained on each submitted form.

Attachment 3

PRE-BID CLARIFICATION ("PBC") FORM
(ALL questions to be submitted on this form ONLY)

PBC # *(RSCCD USE ONLY)*:	171

PROJECT NAME:	RFP #1819-224 Johnson Student Center at Santa Ana College		
PROJECT NUMBER:	3035	DSA NUMBER:	Demolition, #04-116810 INC 1 and INC 2
EMAIL:	**FacilitiesRFP@rsccd.edu**		

DATE:	10/11/2018		
FROM:	S.Monsen - McCarthy	EMAIL:	SMonsen@McCarthy.com
SPECIFICATION NUMBER:		DRAWING NUMBER:	A2.22 & LV1.22

REQUESTED CLARIFICATION:

Increment #2 - A2.22 shows the private tutoring rooms J209-2, J209-3, and J209-4 to have flat panel displays while LV1.22 does not show these panels. Please advise if these locations are to have the displays and provide the appropriate details.

RESPONSE TO CLARIFICATION, **SUBMITTED AS PART OF AN ADDENDUM**:

AV scope for Private Tutoring Rooms has been deleted.

RESPONSE PROVIDED BY:	Jeremy Birch, CTS (PlanNet)	DATE:	10/12/18

Attach additional numbered sheets as necessary; however, only one (1) request shall be contained on each submitted form.

Attachment 3

PRE-BID CLARIFICATION ("PBC") FORM
(ALL questions to be submitted on this form ONLY)

PBC # *(RSCCD USE ONLY)*: 172

PROJECT NAME:	RFP #1819-224 Johnson Student Center at Santa Ana College		
PROJECT NUMBER:	3035	DSA NUMBER:	Demolition, #04-116810 INC 1 and INC 2
EMAIL:	**FacilitiesRFP@rsccd.edu**		

DATE:	10/09/2018		
FROM:	S.Monsen - McCarthy	EMAIL:	SMonsen@McCarthy.com
SPECIFICATION NUMBER:		DRAWING NUMBER:	E2.13, LV1.21

REQUESTED CLARIFICATION:

Increment #2 -
E2.13 indicates the North Lobby J200-1 to have a "Flat Panel Display" (Keynote 22) near gridlines C.1 & 3 while gridlines 5 & B.8 should be "Digital Signage" (Keynote 23). Spec section 274116-1.3D provides dimensions for Informational displays and Digital Signage and provides two different dimensions while LV1.21 calls out these two displays with the same detail (5/LV5.21) indicating they are to be the same dimensions (which is different than the dimensions in the specs). Please clarify which type of signage and the dimensions of the displays should be provided at each location.

At the 2 other "Flat Panel Display" (Keynote 22) locations detail 3/LV5.21 is called out. Please confirm that these 2 locations are Informational Display signage which is 55" per spec 2741161.3D.

RESPONSE TO CLARIFICATION, **SUBMITTED AS PART OF AN ADDENDUM**:

All displays detailed with LV5.21/5 are portrait-oriented 43" Samsung PM43F w/ embedded digital signage player (or current equal); spec sheet attached

All displays detailed with LV5.21/3 are landscape-oriented 55" Samsung PM55F w/ embedded digital signage player (or current equal); spec sheet attached

RESPONSE PROVIDED BY:	Jeremy Birch, CTS (PlanNet)	DATE:	10/11/18

Attach additional numbered sheets as necessary; however, only one (1) request shall be contained on each submitted form.

PMF Series Commercial LED LCD Displays

32.0"	PM32F	49.0"	PM49F
43.0"	PM43F	55.0"	PM55F

SAMSUNG

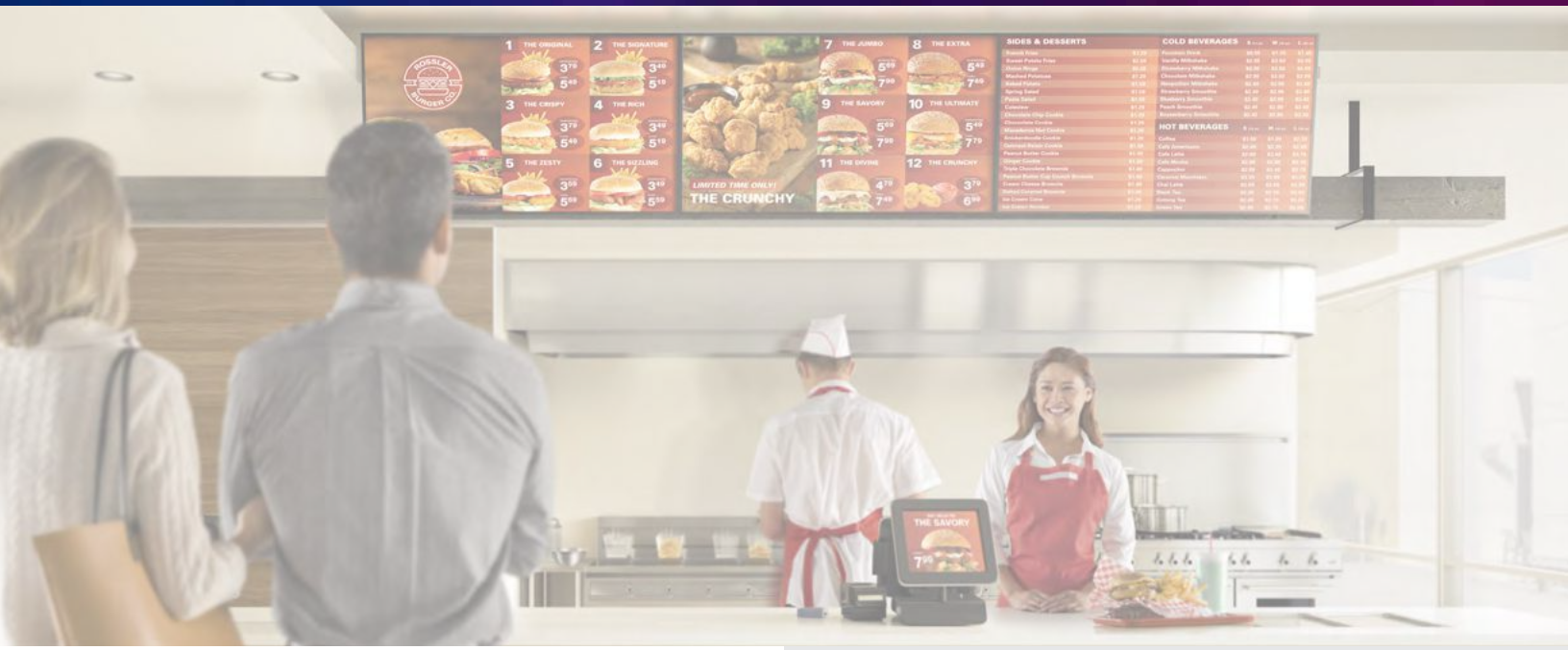

Digital signage that means business

PMF Series 32"/43"/49"/55" digital signage

Deliver your message at the highest level, even in less-than-ideal environments. Samsung PMF Series digital signage panels feature sharp, bright, exceptional images, with durability to match. These IP5X-rated displays are resistant to dust intrusion as well as airborne grease. Samsung PMF signage will deliver messages worry-free, 24/7 (PM32F is 16/7 runtime). And the non-glare screen ensures the head-turning images are always easily seen. They're the signage panels that can be counted on to deliver premium messaging, all day, every day.

Key features

24/7 runtime for reliable, continuous operation

Commercial-level cooling technologies offer dependable reliability. Samsung PMF Series panels are designed to deliver messages for extended periods of time, while also delivering peace of mind (PM32F is 16/7 runtime).

IP5X for lasting durability

PMF Series signage panels are rated IP5X dust-free for long-lasting, trouble-free operation without any additional housing.

Non-glare panel makes messages easier to see

Messages are easier to see with non-glare, anti-reflective panels that reduce reflection up to 44%. Text is legible, visuals have maximum impact.

Next gen SSP 4.0 powered by Tizen OS

The Samsung Smart Signage Platform 4.0 delivers a powerful, all-in-one solution. The PMF panel's internal CPU and high-performance video processor deliver an integrated media player platform, eliminating the need for an external set-back box or PC.

Enhanced web compatibility with available B2B developer SDK

Samsung B2B SDK allows developers to build web-based apps for customer functionality and greater interactivity.

Ultra-slim, ADA-compliant profile of just 1.1"

The Samsung PMF Series signage panels are just 1.1" thick, including the mount, and they're ADA-compliant.

Contact us
1-866-SAM4BIZ
samsung.com/business
samsung.com/b2bdigitalsignage

Follow us
youtube.com/samsungbizusa
@SamsungBizUSA

DIGITAL SIGNAGE DISPLAYS

INFORMATIONAL DISPLAYS

Samsung PMF series commercial LED LCD displays

			PM32F	PM43F	PM49F	PM55F
Panel	Diagonal Size		32"	43"	49"	55"
	Type		60Hz E-LED BLU	60Hz E-LED BLU	60Hz E-LED BLU	60Hz E-LED BLU
	Resolution		1920 x 1080 (16:9)	1920 x 1080 (16:9)	1920 x 1080 (16:9)	1920 x 1080 (16:9)
	Brightness (Typ.)		400 nits	500 nits	500 nits	500 nits
	Contrast Ratio (Typ.)		5000:1	5000:1	5000:1	5000:1
	Viewing Angle (H / V)		178:178	178:178	178:178	178:178
	Response Time (G-to-G)		8ms	8ms	8ms	8ms
	Orientation		Landscape / Portrait	Landscape / Portrait	Landscape / Portrait	Landscape / Portrait
	Operation Hours		16/7	24/7	24/7	24/7
	Anti Reflective		2%	44%	25%	25%
Sound	Speaker Type		Built in Speaker (10W + 10W)	Built in Speaker (10W + 10W)	Built in Speaker (10W + 10W)	Built in Speaker (10W + 10W)
Connectivity	Input	RGB	DVI-I (D-Sub Common), DisplayPort 1.2 (2)	DVI-I (D-Sub Common), DisplayPort 1.2 (2)	DVI-I (D-Sub Common), DisplayPort 1.2 (2)	DVI-I (D-Sub Common), DisplayPort 1.2 (2)
		Video	HDMI (2)	HDMI (2)	HDMI (2)	HDMI (2)
		Audio	Stereo Mini Jack	Stereo Mini Jack	Stereo Mini Jack	Stereo Mini Jack
		USB	USB 2.0 x 2	USB 2.0 x 2	USB 2.0 x 2	USB 2.0 x 2
	Output	Audio	Stereo Mini Jack	Stereo Mini Jack	Stereo Mini Jack	Stereo Mini Jack
	External Control		RS232C (In / Out) thru Stereo Jack, RJ45	RS232C (In / Out) thru Stereo Jack, RJ45	RS232C (In / Out) thru Stereo Jack, RJ45	RS232C (In / Out) thru Stereo Jack, RJ45
Power	Type		Internal	Internal	Internal	Internal
	Power Supply		AC 100 - 240 V~ (+/- 10 %), 50/60 Hz	AC 100 - 240 V~ (+/- 10 %), 50/60 Hz	AC 100 - 240 V~ (+/- 10 %), 50/60 Hz	AC 100 - 240 V~ (+/- 10 %), 50/60 Hz
	Power Consumption	Max [W / H]	88	154	165	187
		Typical [W / H]	42	66	47	55
		Sleep Mode	Less than 0.5W	Less than 0.5W	Less than 0.5W	Less than 0.5W
		Off Mode	Less than 0.5W	Less than 0.5W	Less than 0.5W	Less than 0.5W
Dimensions	Set (WxHxD)		28.3" x 16.3" x 1.1"	37.7" x 21.6" x 1.1"	43" x 24.5" x 1.1"	48.3" x 27.6" x 1.1"
	Package (WxHxD)		31.3" x 19" x 5.1"	40" x 24" x 5.1"	47" x 28.3" x 6.5"	52.5" x 31.9" x 7.1"
	Bezel Width (mm)		8.9 (Top / Side), 8.9 (Bottom)	6.9 (Top / Side), 8.9 (Bottom)	6.9 (Top / Side), 8.9 (Bottom)	6.9 (Top / Side), 8.9 (Bottom)
Weight	Set		12.5 lbs.	20.7 lbs.	28.1 lbs.	35.9
	Package		15.4 lbs.	25 lbs.	39.9 lbs.	48 lbs.
Features	VESA Mount		200 x 200mm	200 x 200mm	400 x 400mm	400 x 400mm
	Stand Type		Foot Stand (Optional)	Foot Stand (Optional)	Foot Stand (Optional)	Foot Stand (Optional)
	Special	Hardware	Temperature Sensor, Videowall (15 x 15 [OSD]), Videowall Daisy Chain (16), Pivot Display, Clock Battery (80 hrs. Clock Keeping), Built in Speaker (10W x 2), Wi-Fi Module Embedded, Tuner (only for NA), IP5X, Center IR	Non Glare Panel, Temperature Sensor, Videowall (15 x 15 [OSD]), Videowall Daisy Chain (16), Pivot Display, Clock Battery (80 hrs. Clock Keeping), Built in Speaker (10W x 2), Wi-Fi Module Embedded, Tuner (only for NA), IP5X, Center IR	Non Glare Panel, Temperature Sensor, Videowall (15 x 15 [OSD]), Videowall Daisy Chain (16), Pivot Display, Clock Battery (80 hrs. Clock Keeping), Built in Speaker (10W x 2), Wi-Fi Module Embedded, Tuner (only for NA), IP5X, Center IR	Non Glare Panel, Temperature Sensor, Videowall (15 x 15 [OSD]), Videowall Daisy Chain (16), Pivot Display, Clock Battery (80 hrs. Clock Keeping), Built in Speaker (10W x 2), Wi-Fi Module Embedded, Tuner (only for NA), IP5X, Center IR
		Software	Magic Clone (to USB), Auto Source Switching & Recovery, RS232C/RJ45 MDC, Plug and Play, PIP/PBP, Image Rotation, Button Lock, DP 1.2 Digital Daisy Chain (HDCP Support), Firmware Update by Network, New Home Screen, PC-less Videowall, Multi Channel, Mobile Control, Event Schedule, Backup Player	Magic Clone (to USB), Auto Source Switching & Recovery, RS232C/RJ45 MDC, Plug and Play, PIP/PBP, Image Rotation, Button Lock, DP 1.2 Digital Daisy Chain (HDCP Support), Firmware Update by Network, New Home Screen, PC-less Videowall, Multi Channel, Mobile Control, Event Schedule, Backup Player	Magic Clone (to USB), Auto Source Switching & Recovery, RS232C/RJ45 MDC, Plug and Play, PIP/PBP, Image Rotation, Button Lock, DP 1.2 Digital Daisy Chain (HDCP Support), Firmware Update by Network, New Home Screen, PC-less Videowall, Multi Channel, Mobile Control, Event Schedule, Backup Player	Magic Clone (to USB), Auto Source Switching & Recovery, RS232C/RJ45 MDC, Plug and Play, PIP/PBP, Image Rotation, Button Lock, DP 1.2 Digital Daisy Chain (HDCP Support), Firmware Update by Network, New Home Screen, PC-less Videowall, Multi Channel, Mobile Control, Event Schedule, Backup Player
	Tuner		Yes	Yes	Yes	Yes
	Internal Media Player		Cortex-A12 1.3GHz Quad Core, 2.5GB DDR3, 8GB FDM, USB 2.0, Tizen 2.4 (VDLinux)	Cortex-A12 1.3GHz Quad Core, 2.5GB DDR3, 8GB FDM, USB 2.0, Tizen 2.4 (VDLinux)	Cortex-A12 1.3GHz Quad Core, 2.5GB DDR3, 8GB FDM, USB 2.0, Tizen 2.4 (VDLinux)	Cortex-A12 1.3GHz Quad Core, 2.5GB DDR3, 8GB FDM, USB 2.0, Tizen 2.4 (VDLinux)
Environmental Conditions	Operating Temperature		0ºC ~ 40ºC	0ºC ~ 40ºC	0ºC ~ 40ºC	0ºC ~ 40ºC
	Operating Humidity		10 ~ 80%	10 ~ 80%	10 ~ 80%	10 ~ 80%
Accessories	Included		Quick Setup Guide, Regulatory Guide, Warranty Card, Power Cord, Remote Controller, Batteries, RS232C(IN) Adapter, Cover Jack			
	Optional	Stand	STN-L3240E	STN-L3240E	STN-L4655E	STN-L4655E
		Mount	WMN4070SD	WMN4070SD	WMN4270SD	WMN4270SD
		Media Player	SBB-DA / SBB-DI (Not attachable)	SBB-DA / SBB-DI	SBB-DA / SBB-DI	SBB-DA / SBB-DI
Green Management	Emission Standard		EMC	EMC	EMC	EMC
	ENERGY STAR Compliant		ENERGY STAR 7.0	ENERGY STAR 7.0	ENERGY STAR 7.0	ENERGY STAR 7.0
	RoHS Compliant		Yes	Yes	Yes	Yes
	Packaging Recyclability		Packing Materials Recyclable	Packing Materials Recyclable	Packing Materials Recyclable	Packing Materials Recyclable
Service	Standard Warranty		3 Years Onsite (Parts / Labor / Backlight)	3 Years Onsite (Parts / Labor / Backlight)	3 Years Onsite (Parts / Labor / Backlight)	3 Years Onsite (Parts / Labor / Backlight)

CONNECTIVITY

1. DisplayPort In
2. DisplayPort Out
3. Antenna In
4. RJ45
5. USB 1
6. USB 2
7. RS232C In
8. RS232C Out
9. Audio In
10. Audio Out
11. HDMI 1
12. HDMI 2
13. DVI / PC / MagicInfo In

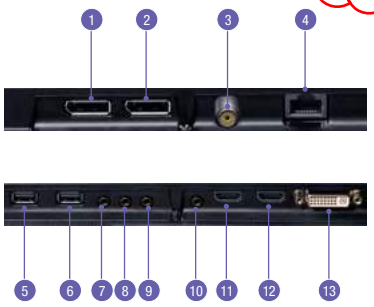

Learn more samsung.com/business insights.samsung.com samsung.com/b2bdigitalsignage

Product support 1-866-SAM4BIZ 1-800-SAMSUNG

Follow us youtube.com/samsungbizusa @SamsungBizUSA

SAMSUNG

©2016 Samsung Electronics America, Inc. Samsung is a registered mark of Samsung Electronics Corp., Ltd. Specifications and design are subject to change without notice. Non-metric weights and measurements are approximate. Simulated screen images. All brand, product, service names and logos are trademarks and or registered trademarks of their respective manufacturers and companies. See samsung.com for detailed information. Printed in USA. LFD-PMFSERIESDSHT-DEC16T

Attachment 3

PRE-BID CLARIFICATION ("PBC") FORM
(ALL questions to be submitted on this form ONLY)

PBC # *(RSCCD USE ONLY)*: 173

PROJECT NAME:	RFP #1819-224 Johnson Student Center at Santa Ana College		
PROJECT NUMBER:	3035	DSA NUMBER:	Demolition, #04-116810 INC 1 and INC 2
EMAIL:	**FacilitiesRFP@rsccd.edu**		

DATE:	10/11/18		
FROM:	Digital Networks Group, Inc.	EMAIL:	biddesk@digitalnetworksgroup.com
SPECIFICATION NUMBER:		DRAWING NUMBER:	

REQUESTED CLARIFICATION: AV

1.The Utelogy control system is indicated as OFOI. Will the owner also be handling the programming of this control system?
2.Should the iPad wall docking stations keep the iPads secured to the wall all the times or should they allow the users to remove the iPad for mobile use?
3.The manufacturer for the sliding keyboard shelf does not seem to have a unit with the listed specs. Can you provide a current model number for the requested sliding keyboard with flip-up monitor?
4.Please confirm if the AV contractor is responsible for providing the PAC501B and PAC526FW back boxes that are listed on the AV gear list.
5.Please confirm quantity of displays and mounts for the Coffee/Juice Bar menu board as there seems to be not enough mounts listed?
a.Please confirm if the menu board displays should be mounted in portrait mode or landscape.
6.J101 has (1) TBD digital signage player and (1) Samsung digital signage player listed in the AV gear list. Please confirm total digital signage players needed in J101.

RESPONSE TO CLARIFICATION, **SUBMITTED AS PART OF AN ADDENDUM**:

1. No, the Utelogy control system programming and GUI interface is the responsibility of the contractor. The owner is only responsible for purchasing the software and license.

2. The iPad docking stations shall keep the iPads secured at all times.

3. Replace with StarTech RACKCONS17HD (cut sheet attached, as well as updated Exhibit B).

4. All Chief PAC Series backboxes shall be provided by the AVC and installed by the Electrical Contractor.

5. Menu board shall contain three (3) landscape-oriented displays. A fourth display shall be ceiling mounted in the NE corner of the Coffee/Juice Bar.

6. Separate digital signage player not needed. The embedded digital signage player in the 65" Samsung QN65F is the only digital signage in The Spot (J101).

RESPONSE PROVIDED BY:	Jeremy Birch, CTS (PlanNet)	DATE:	10/11/18

Attach additional numbered sheets as necessary; however, only one (1) request shall be contained on each submitted form.

StarTech.com
Hard-to-find made easy®

1U 17" HD 1080p Rackmount LCD Console with Front USB Hub

Control server equipment from a centralized, Full HD KVM console

Product ID: RACKCONS17HD

(0 reviews) | Add a review

- Supports HD resolutions up to 1920x1080
- Durable 1U rack-mountable design
- LED Backlight; reduced power consumption

View More

$1,065.99 USD

IN STOCK
US: 53 | CA: 9

Same Day Shipping on in-stock items from USA if ordered by 5pm ET* Details

Volume Order?
Request a quote

Reseller Pricing:
Create an Account

Overview

The RACKCONS17HD 17” Full HD LCD Rack Console lets you control server equipment from a centralized, 17in 1080p KVM console, with an integrated 2-port front USB hub.

The integrated single port KVM module offers universal support for DVI or VGA, and USB or PS/2 console connections and includes all of the necessary cabling to get you up and running. Connect the console to either a single system, or a multi-port KVM switch to manage multiple systems.

The front panel USB hub places two easily accessible USB 2.0 ports at your disposal for connecting external storage and other peripherals as needed.

For added security in your server room, this rackmount LCD also includes a physical key-lock.

Backed by a StarTech.com 2-year warranty and free lifetime technical support.

The StarTech.com Advantage

- Maximize screen real estate with a Full HD 1080p display
- Simplify file transfers and software installations, using the front panel USB hub ports
- Universal control of a server or KVM switch with support for DVI or VGA video, and USB or PS/2 input

Applications

Ideal for high resolution applications in the server room, where the previous standard 1024x768 17" screens are not sufficient

Centralized control of a single system, or dozens of PCs when connected to a KVM switch

Improving the internal space-efficiency of existing cabinets

Manage cabinet-mounted servers and KVM switches

Technical Specifications

Supports any operating system.
No additional drivers or software required.

Certifications

RoHS Compliant Available

PRODUCT NUMBERS

TechData Dis	11439258
ASI	154542
D and H	RACKCONS17HD
Ingram Micro USA	VM2986
Synnex US	STA-RACKCONS17HD
UPC Code	065030854528

WARRANTY INFORMATION

Warranty	2 Years

HARDWARE

Audio	No
Cables Included	Yes
Daisy-Chain	Yes
Display Size	17in
Front Door Key Lock	Yes
KVM Ports	1
Number of Monitors Supported	1
Panel Type	Active Matrix TFT LCD
PC Interface	USB and PS/2
PC Video Type	DVI+VGA
Rack-Mountable	Yes
U Height	1U

PERFORMANCE

Aspect Ratio	Wide (16:9)
Brightness	300 cd/m²
Color Depth	8-bit, 16.7M colors

Contrast Ratio	650:1
IP Control	No
Maximum Number of Users	1
MTBF	50, 000 Hrs
Pixel Pitch Support	0.264 x 0.264 mm
Response Time	2ms
Supported Resolutions	Up to 1920 x 1080
Viewing Angle	140° (H), 120° (V)

CONNECTOR(S)

Console Interface(s)	1 - DVI-I (29 pin)
	1 - VGA (15 pin, High Density D-Sub)
	2 - PS/2 (6 pin, Mini-DIN)
	2 - USB Type-A (4 pin) USB 2.0
Other Interface(s)	2 - USB Type-A (4 pin) USB 2.0

SOFTWARE

OS Compatibility	OS independent; No software or drivers required

POWER

Center Tip Polarity	Positive
Input Current	1.7 A
Input Voltage	100 ~ 240 AC
Output Current	4.17 A
Output Voltage	12 DC
Plug Type	M
Power Consumption (In Watts)	23.35
Power Source	AC Adapter Included

ENVIRONMENTAL

Humidity	10~90% RH

Operating Temperature	0°C to 50°C (32°F to 122°F)
Storage Temperature	-20°C to 60°C (-4°F to 140°F)

PHYSICAL CHARACTERISTICS

Color	Black
Enclosure Type	Heavy Duty Steel
Maximum Mounting Depth	39.4 in [1000 mm]
Minimum Mounting Depth	19.8 in [504 mm]
Product Height	1.7 in [43 mm]
Product Length	18.5 in [470 mm]
Product Weight	20.5 lb [9.3 kg]
Product Width	17.3 in [440 mm]

PACKAGING INFORMATION

Shipping (Package) Weight	37.8 lb [17.1 kg]

WHAT'S IN THE BOX

Included in Package	1 - 1U Rack Console
	1 - Set, Mounting Rails
	2 - Extended Brackets
	2 - Short Brackets
	2 - Short Bracket Attachments
	2 - Keys
	1 - 6ft (1.8m) PS/2 VGA KVM Cable
	1 - 6ft (1.8m) USB A-A Cable
	6 - #6-32x6 Flat Screws
	6 - M4x5 Screws
	1 - Power Adapter
	1 - NA Power Cord
	1 - Instruction Manual

Attachment 3

PRE-BID CLARIFICATION ("PBC") FORM
(ALL questions to be submitted on this form ONLY)

PBC # *(RSCCD USE ONLY)*: 174

PROJECT NAME:	RFP #1819-224 Johnson Student Center at Santa Ana College		
PROJECT NUMBER:	3035	DSA NUMBER:	Demolition, #04-116810 INC 1 and INC 2
EMAIL:	**FacilitiesRFP@rsccd.edu**		

DATE:	10/11/2018		
FROM:	S.Monsen - McCarthy	EMAIL:	SMonsen@McCarthy.com
SPECIFICATION NUMBER:	271000	DRAWING NUMBER:	

REQUESTED CLARIFICATION:

Increment #2 - Specification Section 271000

1. Please confirm that the shop drawings for the structured cabling system must be produced by a registered RCDD as specified in Section 271000 Item 1.3-C.
2. Please confirm the contractor is responsible to furnish & install CAT 6 patch cords for both ends (at equipment racks & at workstations)
3. Please confirm that network switches are contractor furnished, contractor installed.
4. Please confirm the port population requirements for the active network switches.

RESPONSE TO CLARIFICATION, **SUBMITTED AS PART OF AN ADDENDUM**:

1. Confirmed.
2. Confirmed. Refer to Section 2.6 B.3
3. Confirmed. Refer to 272000 Specs.
4. Refer to 272000 Specs. Section 3.5 H states District ITS will perform all cable cross-connect and station patching tasks.

RESPONSE PROVIDED BY:	Carlo Monton	DATE:	10/12/2018

Attach additional numbered sheets as necessary; however, only one (1) request shall be contained on each submitted form.

Attachment 3

PRE-BID CLARIFICATION ("PBC") FORM
(ALL questions to be submitted on this form ONLY)

PBC # *(RSCCD USE ONLY)*: 175

PROJECT NAME:	RFP #1819-224 Johnson Student Center at Santa Ana College		
PROJECT NUMBER:	3035	DSA NUMBER:	Demolition, #04-116810 INC 1 and INC 2
EMAIL:	**FacilitiesRFP@rsccd.edu**		

DATE:	10/11/2018		
FROM:	S.Monsen - McCarthy	EMAIL:	SMonsen@McCarthy.com
SPECIFICATION NUMBER:	272000	DRAWING NUMBER:	

REQUESTED CLARIFICATION:

Increment #2 - Specification Section 272000
•Please confirm that wireless access points are contractor furnished, contractor installed.

RESPONSE TO CLARIFICATION, **SUBMITTED AS PART OF AN ADDENDUM**:

Confirmed.

RESPONSE PROVIDED BY:	Carlo Monton	DATE:	10/12/2018

Attach additional numbered sheets as necessary; however, only one (1) request shall be contained on each submitted form.

Attachment 3

PRE-BID CLARIFICATION ("PBC") FORM
(ALL questions to be submitted on this form ONLY)

PBC # *(RSCCD USE ONLY)*:	176

PROJECT NAME:	RFP #1819-224 Johnson Student Center at Santa Ana College		
PROJECT NUMBER:	3035	DSA NUMBER:	Demolition, #04-116810 INC 1 and INC 2
EMAIL:	**FacilitiesRFP@rsccd.edu**		

DATE:	10/11/2018		
FROM:	S.Monsen - McCarthy	EMAIL:	SMonsen@McCarthy.com
SPECIFICATION NUMBER:	275313	DRAWING NUMBER:	

REQUESTED CLARIFICATION:

Increment #2 - Specification Section 275313
•Please confirm that the campus-wide Primex transmitter is existing to support wireless clock system.
•Please confirm if a Primex repeater is required to be installed, If so, please specify model number & size (wattage output).

RESPONSE TO CLARIFICATION, **SUBMITTED AS PART OF AN ADDENDUM**:

This is a design-build system. The requirements for a turn-key system are identified in Section 275313. The Contractor is responsible for a complete design, installation, and operating system per the specified requirements.

RESPONSE PROVIDED BY:	Carlo Monton, PlanNet Consulting	DATE:	10/12/2018

Attach additional numbered sheets as necessary; however, only one (1) request shall be contained on each submitted form.

Attachment 3

PRE-BID CLARIFICATION ("PBC") FORM
(ALL questions to be submitted on this form ONLY)

PBC # *(RSCCD USE ONLY)*: 177

PROJECT NAME:	RFP #1819-224 Johnson Student Center at Santa Ana College		
PROJECT NUMBER:	3035	DSA NUMBER:	Demolition, #04-116810 INC 1 and INC 2
EMAIL:	**FacilitiesRFP@rsccd.edu**		

DATE:	10/11/2018		
FROM:	S.Monsen - McCarthy	EMAIL:	SMonsen@McCarthy.com
SPECIFICATION NUMBER:	281300	DRAWING NUMBER:	

REQUESTED CLARIFICATION:

Increment #2 - Specifications Section 281300
•Confirm the access control server is existing. Please provide specific upgrade requirements at the existing server, if applicable (firmware, software, licenses).
•Confirm that contractor is to provide 2500-keyfobs to the college for the access control system.

RESPONSE TO CLARIFICATION, **SUBMITTED AS PART OF AN ADDENDUM**:

A) The access control server is existing. There are no upgrade requirements. B) Contractor shall provide 2000 programmed credentials to RSCCD. An additional 500 credentials (not programmed) shall be provided for RSCCD use.

RESPONSE PROVIDED BY:	T.J. Hicks - PlanNet Consulting	DATE:	10/15/2018

Attach additional numbered sheets as necessary; however, only one (1) request shall be contained on each submitted form.

Attachment 3

PRE-BID CLARIFICATION ("PBC") FORM
(ALL questions to be submitted on this form ONLY)

PBC # *(RSCCD USE ONLY)*:	178

PROJECT NAME:	RFP #1819-224 Johnson Student Center at Santa Ana College		
PROJECT NUMBER:	3035	DSA NUMBER:	Demolition, #04-116810 INC 1 and INC 2
EMAIL:	**FacilitiesRFP@rsccd.edu**		

DATE:	10/11/2018		
FROM:	S.Monsen - McCarthy	EMAIL:	SMonsen@McCarthy.com
SPECIFICATION NUMBER:	282300	DRAWING NUMBER:	

REQUESTED CLARIFICATION:

Increment #2 - Specification Section 282300
•Confirm if any storage upgrades are required at the existing DVR. If so, provide specific upgrades and model numbers.

RESPONSE TO CLARIFICATION, **SUBMITTED AS PART OF AN ADDENDUM**:

Contractor is responsible for providing all necessary licenses for cameras. Additional storage will be provided by the Owner.

RESPONSE PROVIDED BY:	T.J. Hicks - PlanNet Consulting	DATE:	10/15/2018

Attach additional numbered sheets as necessary; however, only one (1) request shall be contained on each submitted form.

Attachment 3

PRE-BID CLARIFICATION ("PBC") FORM
(ALL questions to be submitted on this form ONLY)

PBC # *(RSCCD USE ONLY)*:	179

PROJECT NAME:	RFP #1819-224 Johnson Student Center at Santa Ana College		
PROJECT NUMBER:	3035	DSA NUMBER:	Demolition, #04-116810 INC 1 and INC 2
EMAIL:	**FacilitiesRFP@rsccd.edu**		

DATE:	09/18/2018		
FROM:	S.Monsen - McCarthy	EMAIL:	SMonsen@McCarthy.com
SPECIFICATION NUMBER:	323119 par. 2.4, 3.4-A, 3.4-E, 3.5-A 323118 par. 1.2-A	DRAWING NUMBER:	

REQUESTED CLARIFICATION:

Increment #2 - Specification Section 323119 par. 2.4, 3.4-A, 3.4-E, 3.5-A - Please confirm that Fence Grounding is or is not required for this project. Please confirm if Bonding to Lightning-Protection System is or is not required, as well as the testing. Also Section 323118 par. 1.2-A (the first paragraph since there are two par. 1.2-A shown) calls for Lightning-Protection System, please confirm if this is required or not. If required, please provide details & location(s) for grounding and protection system.

RESPONSE TO CLARIFICATION, **SUBMITTED AS PART OF AN ADDENDUM**:

SPECIFICATION SECTION 323119 HAS BEEN REMOVED IN ITS ENTIRETY. GATES/FENCES HAVE NO MOTOR(S) REMOVE FROM SPECIFICATION 323118 PAR., 1.2-A.

RESPONSE PROVIDED BY:	Julia D. Jones / hpi	DATE:	10/22/18

Attach additional numbered sheets as necessary; however, only one (1) request shall be contained on each submitted form.

Attachment 3

PRE-BID CLARIFICATION ("PBC") FORM
(ALL questions to be submitted on this form ONLY)

PBC # *(RSCCD USE ONLY)*: 180

PROJECT NAME:	RFP #1819-224 Johnson Student Center at Santa Ana College		
PROJECT NUMBER:	3035	DSA NUMBER:	Demolition, #04-116810 INC 1 and INC 2
EMAIL:	**FacilitiesRFP@rsccd.edu**		

DATE:	10/02/2018		
FROM:	S.Monsen - McCarthy	EMAIL:	SMonsen@McCarthy.com
SPECIFICATION NUMBER:		DRAWING NUMBER:	

REQUESTED CLARIFICATION:

The 7 For Reference Only Drawings show the existing Site Signal Plans, however the bidders will need a drawing that shows all the existing Site Utilities that are near the Limit-of-Work perimeter to determine if those existing utilities need to be protected with Temporary Shoring due to possible mass excavation in order to remove the existing 40' piles. The drawings need to include utility sizes and invert elevations for all systems (water, sewer, storm, chilled supply, chilled return, gas, power, signal, and possibly irrigation layout). Or, the Design Team could provide a common bid document that shows the location & depth & design basis of the Temporary Shoring for the bidders to include equally as the basis-of-bid.

RESPONSE TO CLARIFICATION, **SUBMITTED AS PART OF AN ADDENDUM**:

Existing (as-built) drawings (65 pages) attached for:
1.Subcontractor Control Air Corp (CAC) – Storm water, water, fire water, sewer.
2.Subcontractor Morrow Meadows (MM) – Emergency phone, fire alarm, power, site lighting.
3.Subcontractor Pierre Landscape (Pierre) – Landscape and Irrigation
4.Subcontractor Southland Industries (SI) – Gas and chilled water

RESPONSE PROVIDED BY:	Julia D. Jones / hpi	DATE:	10/15/18

Attach additional numbered sheets as necessary; however, only one (1) request shall be contained on each submitted form.

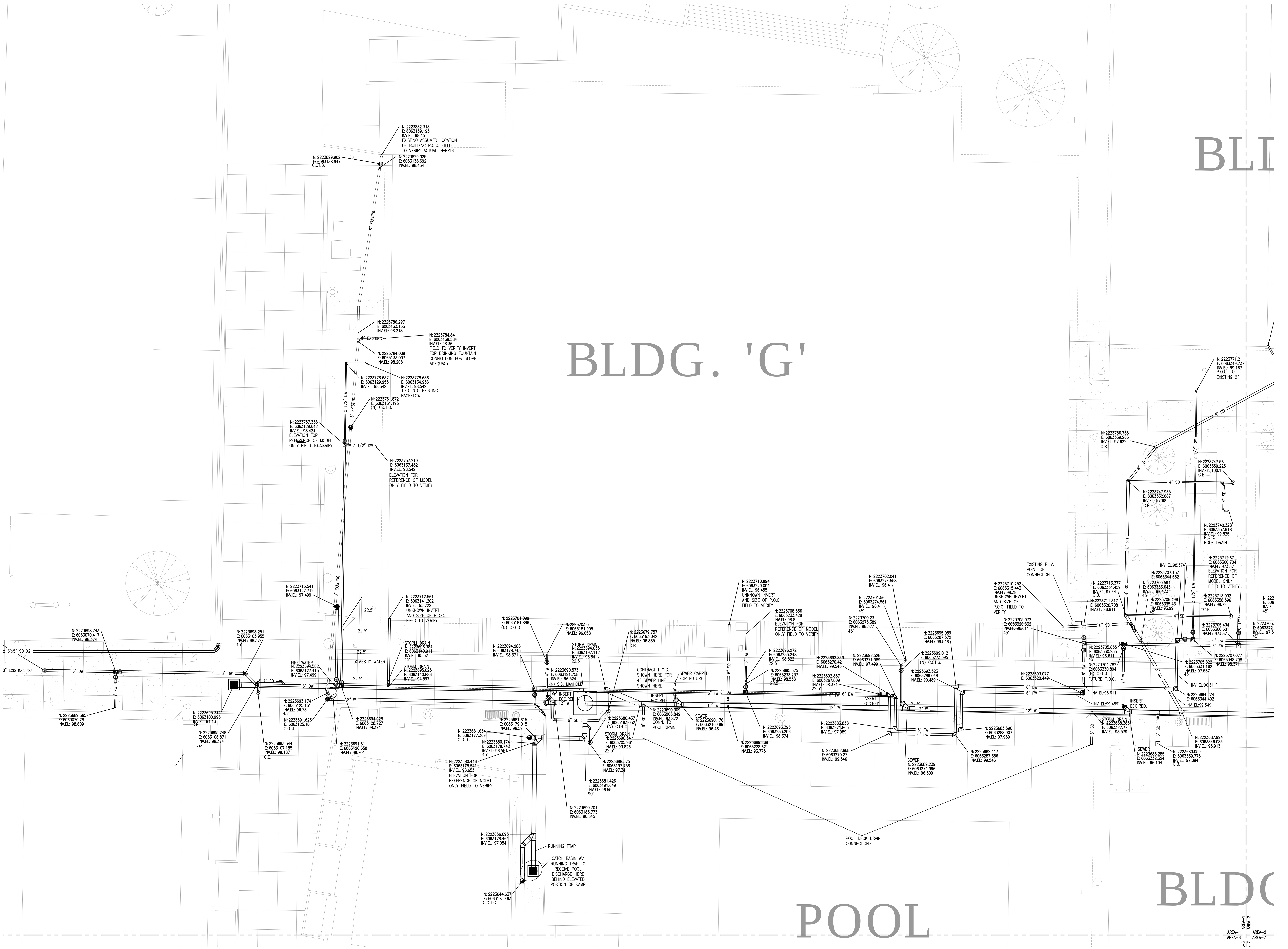

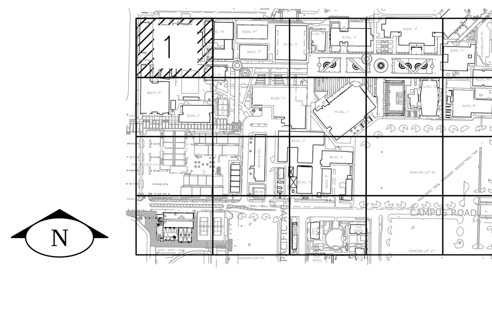

AS—BUILT

11–30–17

NOTE: EXISTING UTILITIES SHOWN FOR REFERENCE ONLY ACTUAL FIELD CONDITIONS MAY VARY

NOTE: INSTALL THRUST BLOCK (TYP.) WHEN ▲ SHOWN

COORDINATION SIGN–OFF

COORDINATION	SIGNATURE	DATE
GENERAL CONTRACTOR		
HVAC DUCTWORK		
HVAC PIPING		
PLUMBING		
FIRE PROTECTION		
ELECTRICAL		
PNEUMATIC TUBE		
STRUCTURAL		
ARCHITECTURAL		

Control
Air Conditioning
Corporation

5200 E. La Palma, Anaheim, CA 92807 PH:(714) 777-8600 FAX:(714) 777-5062

NO.	DATE	REVISION
A	07–14–16	PHASE 4 ISSUED FOR A&E APPROVAL
B	12–21–16	PROGRESS PRINTS
C	2–14–17	PROGRESS PRINT
D	3–6–17	PROGRESS PRINT
E	7–28–17	UPDATED PER LATEST HARDSCAPE @ BACKGROUND BULL–30
0	11–30–17	ISSUED FOR AS–BUILT

DRAWING TITLE: SANTA ANA COLLEGE
CAC UNDERGROUND UTILITIES AREA 1

JOB TITLE: SANTA ANA COLLEGE
QUAD INFRASTRUCTURE RENOVATION

JOB ADDRESS: 1530 WEST 17TH STREET
SANTA ANA, CALIFORNIA 92706

DATE	11/25/15
SCALE	1/8" = 1'–0"
DRAWN BY	CJR
REF DWG.	C001
JOB NO.	157029
DRAWING NO.	CAC–SITE–A1

Control Air Conditioning
Corporation

Dwg File:J:\157029 Santa Ana College\Shop_dwgs\PL DRAWINGS\LVL-SITE\CAC-PL.dwg Plotted by: CReich 11-30-2017 1:42pm

BLDG. 'W'

BLDG. 'H'

BLDG. 'T'

BLD

DG. 'E'

N: 2223823.865
E: 6063461.076
INV.EL: 97.948

N: 2223816.214
E: 6063460.964
INV.EL: 97.973

N: 2223816.094
E: 6063469.145
INV.EL: 98.135
P.O.C

N: 2223798.858
E: 6063460.709
INV.EL: 98.029

N: 2223798.717
E: 6063470.337
INV.EL: 98.186
P.O.C

N: 2223800.823
E: 6063483.91
INV.EL: 96.104
C.B.

N: 2223799.818
E: 6063583.484
INV.EL: 96.903
C.B.

8" EXISTING

N: 2223785.839
E: 6063465.781
INV.EL: 95.786
UNKNOWN INVERT
AND SIZE OF P.O.C.
FIELD TO VERIFY

N: 2223768.068
E: 6063480.333
INV.EL: 95.603
ROOF DRAIN
P.O.C.

N: 2223761.605
E: 6063456.44
INV.EL: 95.424
ROOF DRAIN
P.O.C.

N: 2223756.841
E: 6063468.884
C.O.T.G.

N: 2223756.44
E: 6063479.678
INV.EL: 96.671
P.O.C.

N: 2223752.406
E: 6063460.027
INV.EL: 98.179

N: 2223752.131
E: 6063478.74
INV.EL: 98.254
P.O.C

N: 2223744.876
E: 6063472.374
C.O.T.G.

N: 2223717.249
E: 6063463.611
INV.EL: 97.537
ELEVATION FOR
REFERENCE OF
MODEL ONLY
FIELD TO VERIFY

N: 2223727.334
E: 6063459.659
INV.EL: 98.26

N: 2223712.377
E: 6063464.698
INV.EL: 93.822

N: 2223727.304
E: 6063461.701
INV.EL: 98.267

ELEVATION FOR
REFERENCE OF
MODEL ONLY
FIELD TO VERIFY

N: 2223717.451
E: 6063461.556
INV.EL: 98.299

N: 2223707.012
E: 6063456.812
C.O.T.G.

N: 2223707.389
E: 6063461.409
INV.EL: 98.331

N: 2223713.736
E: 6063466.156
C.O.T.G.

N: 2223704.652
E: 6063456.745
INV.EL: 93.718

N: 2223712.696
E: 6063473.439
C.O.T.G.

N: 2223711.007
E: 6063448.883
INV.EL: 99.286
ROOF DRAIN
P.O.C.

N: 2223711.279
E: 6063471.986
INV.EL: 96

N: 2223711.135
E: 6063492.324
INV.EL: 96.733
ROOF DRAIN
P.O.C.

N: 2223707.524
E: 6063452.162
INV.EL: 98.361

N: 2223704.147
E: 6063446.719
INV.EL: 99.172

N: 2223701.418
E: 6063463.387
INV.EL: 97.537

N: 2223703.978
E: 6063492.231
INV.EL: 96.62

N: 2223698.63
E: 6063511.031
INV.EL: 96.264
UNKNOWN INVERT
AND SIZE OF P.O.C.
FIELD TO VERIFY

N: 2223700.438
E: 6063452.254
INV.EL: 99.098

N: 2223704.408
E: 6063456.365
INV.EL: 96.894

N: 2223703.074
E: 6063472.143
INV.EL: 97.748

N: 2223702.426
E: 6063472.144
INV.EL: 98.396
22.5°

N: 2223699.416
E: 6063472.101
INV.EL: 98.406
22.5°

N: 2223698.393
E: 6063472.091
INV.EL: 98.084
22.5°

N: 2223703.512
E: 6063452.103
INV.EL: 98.374

N: 2223690.527
E: 6063510.916
INV.EL: 96.181
45°

N: 2223683.275
E: 6063503.464
INV.EL: 96.074
45°

N: 2223678.133
E: 6063485.44
INV.EL: 93.223
45°

N: 2223679.723
E: 6063507.309
C.O.T.G.

N: 2223677.562
E: 6063505.071
INV.EL: 95.842

N: 2223673.676
E: 6063527.319
INV.EL: 98.074
45°

N: 2223666.748
E: 6063527.217
INV.EL: 98.144
CAPPED FOR
FUTURE

N: 2223677.045
E: 6063574.795
INV.EL: 93.628
22.5°

N: 2223676.131
E: 6063611.453
INV.EL: 96.11
(N) S.S. MANHOLE
102.4' RIM

N: 2223658.379
E: 6063475.163
INV.EL: 93.05
(N) S.D. MANHOLE
TO BE REBUILT TO
INCORPORATE THE 16"
STORM DRAIN AT 93.05'
102.02' RIM

N: 2223657.096
E: 6063445.156
INV.EL: 99.5
C.B.

N: 2223650.195
E: 6063466.83
INV.EL: 93.037
45°

N: 2223648.501
E: 6063475.012
INV.EL: 95.73
(N) S.S. MANHOLE
101.91' RIM

N: 2223635.199
E: 6063449.847
INV.EL: 99.22
11.25°

N: 2223632.357
E: 6063421.994
UNKNOWN INVERT

N: 2223632.294

N: 2223857.362
E: 6063613.998
C.O.T.G.

N: 2223856.798
E: 6063609.063
INV.EL: 98.43
UNKNOWN SIZE OF
P.O.C. FIELD TO VERIFY

N: 2223855.972
E: 6063613.978
INV.EL: 97.492

N: 2223763.804
E: 6063632.963
INV.EL: 97.362
STUB AND CAP FOR
FUTURE SERVICE

N: 2223763.807
E: 6063634.554
INV.EL: 98.512
UNKNOWN INVERT
AND SIZE OF P.O.C.
FIELD TO VERIFY

N: 2223756.432
E: 6063638.056
C.O.T.G.

4" EXISTING

N: 2223751.69
E: 6063612.499
C.O.T.G.

N: 2223749.515
E: 6063638.068
C.O.T.G.

N: 2223748.031
E: 6063612.462
INV.EL: 96.434

N: 2223749.438
E: 6063643.671
INV.EL: 96.878
P.O.C. TO ACID WASTE
GLASS PIPING MINUS
CLARIFIER

N: 2223701.051
E: 6063613.477
INV.EL: 95.187
45°

N: 2223698.799
E: 6063631.031
INV.EL: 98.376
45°

N: 2223701.085
E: 6063611.071
INV.EL: 97.585
45°

N: 2223700.853
E: 6063827.296
INV.EL: 95.187
45°

N: 2223699.309
E: 6063611.954
INV.EL: 97.199
45°

N: 2223699.277
E: 6063614.174
INV.EL: 95.176
45°

N: 2223698.762
E: 6063633.656
INV.EL: 98.376

N: 2223699.1
E: 6063626.612
INV.EL: 95.187
45°

N: 2223697.023
E: 6063632.043
INV.EL: 97.187

N: 2223697.061
E: 6063629.412
INV.EL: 97.187
45°

N: 2223685.351
E: 6063596.885
INV.EL: 93.744
22.5°

N: 2223678.222
E: 6063639.796
INV.EL: 94.824
22.5°

N: 2223674.798
E: 6063638.745
INV.EL: 96.283
22.5°

N: 2223674.323
E: 6063639.742
INV.EL: 96.3
CONN. TO EXISTING
FIELD TO VERIFY INV.
EL. & SIZE

N: 2223653.404
E: 6063639.447
INV.EL: 96.519
C.B.

N: 2223783.052
E: 6063368.27
INV.EL: 97.627
P.O.C.
ROOF DRAIN
C.B.

N: 2223787.634
E: 6063396.399
INV.EL: 97.675
C.B.

N: 2223771.2
E: 6063349.737
INV.EL: 99.167
P.O.C. TO
EXISTING 2"

N: 2223740.328
E: 6063357.918
INV.EL: 99.825
DRAIN

N: 2223712.67
E: 6063360.704
INV.EL: 97.537
ELEVATION FOR
REFERENCE OF
MODEL ONLY
FIELD TO VERIFY

N: 2223707.077
E: 6063348.798
INV.EL: 98.371

N: 2223705.404
E: 6063360.601
INV.EL: 97.537

N: 2223706.715
E: 6063373.468
INV.EL: 98.371
45°

N: 2223704.636
E: 6063375.486
INV.EL: 98.371
45°

N: 2223701.202
E: 6063393.708
INV.EL: 98.56
ELEVATION FOR
REFERENCE OF
MODEL ONLY
FIELD TO VERIFY

N: 2223702.678
E: 6063374.681
INV.EL: 97.537
45°

N: 2223705.239
E: 6063372.192
INV.EL: 97.537
45°

N: 2223704.079
E: 6063393.667
INV.EL: 98.371

N: 2223707.059
E: 6063401.007
INV.EL: 98.651

N: 2223705.379
E: 6063401.039
INV.EL: 98.702

N: 2223702.186
E: 6063409.348
INV.EL: 97.537

N: 2223700.361
E: 6063397.122
INV.EL: 96.409

N: 2223699.711
E: 6063397.139
C.O.T.G.

N: 2223698.483
E: 6063407.935
INV.EL: 98.549

SEWER
N: 2223687.18
E: 6063388.722
INV.EL: 95.973

INSERT
ECC.RED.

N: 2223686.604
E: 6063433.1
C.O.T.G.

N: 2223685.696
E: 6063446.495
INV.EL: 93.32

N: 2223684.733
E: 6063407.935
INV.EL: 98.333

N: 2223684.733
E: 6063414.303
INV.EL: 98.234

N: 2223678.998
E: 6063415.578
INV.EL: 97.094
C.B.

SEWER
N: 2223686.576
E: 6063437.787
INV.EL: 95.872

N: 2223680.951
E: 6063443.324
INV.EL: 95.854

N: 2223677.63
E: 6063456.387
INV.EL: 93.335
TEE W/ ECC RED

2 1/2" DW

AREA-1
AREA-6

AREA-1
AREA-2

AREA-2
AREA-6

AREA-2
AREA-7

AREA-2
AREA-3

AS-BUILT

11-30-17

NOTE: EXISTING UTILITIES SHOWN FOR REFERENCE ONLY ACTUAL FIELD CONDITIONS MAY VARY

NOTE: INSTALL THRUST BLOCK (TYP.) WHEN ▲ SHOWN

N

2

COORDINATION SIGN-OFF

	SIGNATURE	DATE
COORDINATION		
GENERAL CONTRACTOR		
HVAC DUCTWORK		
HVAC PIPING		
PLUMBING		
FIRE PROTECTION		
ELECTRICAL		
PNEUMATIC TUBE		
STRUCTURAL		
ARCHITECTURAL		

Control Air Conditioning Corporation

5200 E. La Palma, Anaheim, CA 92807 PH:(714)777-8600 FAX:(714)777-0662

NO.	DATE	REVISION
		BULLETIN 40 PROGRESS PRINT
A	7-24-17	UPDATED PER LATEST HARDSCAPE & BACKGROUND BULL-30
A	7-28-17	ISSUED FOR AS-BUILT
A	11-30-17	

NO.	DATE	REVISION
A	04-07-16	PHASE 4 ISSUED FOR A&E APPROVAL
A	04-28-16	PHASE 5 ISSUED FOR A&E APPROVAL
A	6-16-16	ISSUED FOR A&E REVIEW PHASE 5 (91)
A	7-15-16	PROGRESS PRINT
A	11-3-16	PROGRESS PRINT
A	12-13-16	PROGRESS PRINT
A	12-21-16	PROGRESS PRINT
A	2-14-17	PROGRESS PRINT
A	3-6-17	PROGRESS PRINT

DRAWING TITLE: SANTA ANA COLLEGE
CAC UNDERGROUND UTILITIES AREA 2

JOB TITLE: SANTA ANA COLLEGE
QUAD INFRASTRUCTURE RENOVATION

JOB ADDRESS: 1530 WEST 17TH STREET
SANTA ANA, CALIFORNIA 92706

DATE: 11/25/15

SCALE: 1/8" = 1'-0"

DRAWN BY: CJR

REF DWG.: C001

JOB NO.: 157029

DRAWING NO.: CAC-SITE-A2

Control Air Conditioning Corporation

Dwg File:L157029 Sheets that Changed Since June'15, 20160622\CAC-SITE.dwg Plotted by: ctolson - 11-30-2017 7:46am

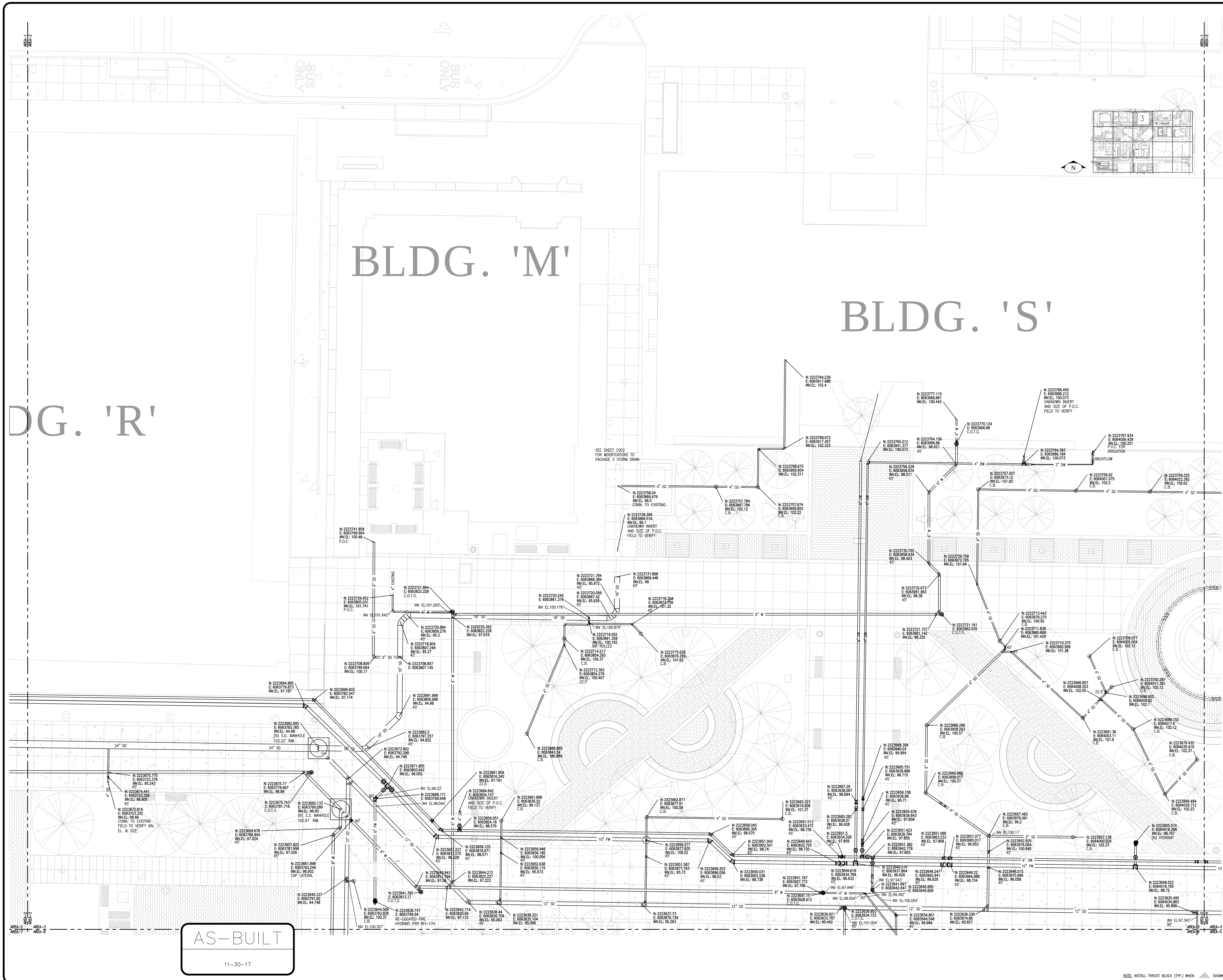

COORDINATION SIGN-OFF

COORDINATION	SIGNATURE	DATE
GENERAL CONTRACTOR		
HVAC DUCTWORK		
HVAC PIPING		
PLUMBING		
FIRE PROTECTION		
ELECTRICAL		
PNEUMATIC TUBE		
STRUCTURAL		
ARCHITECTURAL		

Control Air Conditioning Corporation
5200 E. La Palma, Anaheim, CA 92807 PH:(714) 777-8600 FAX:(714) 777-5062

NO.	DATE	REVISION
A	4-28-16	ISSUED FOR A&E REVIEW PHASE 5
B	6-16-16	ISSUED FOR A&E REVIEW PHASE 5 (R1)
C	11-3-16	PROGRESS PRINT
D	12-7-16	PROGRESS PRINT
E	12-21-16	PROGRESS PRINT
F	7-28-17	UPDATED PER LATEST HARDSCAPE @ BACKGROUND BULL-30
0	11-30-17	ISSUED FOR AS-BUILT

DRAWING TITLE: SANTA ANA COLLEGE CAC UNDERGROUND UTILITIES AREA 3

JOB TITLE: SANTA ANA COLLEGE QUAD INFRASTRUCTURE RENOVATION

JOB ADDRESS: 1530 WEST 17TH STREET SANTA ANA, CALIFORNIA 92706

DATE: 11/25/15

SCALE: 1/8" = 1'-0"

DRAWN BY: CJR

REF DWG.: C001

JOB NO.: 157029

DRAWING NO.: CAC-SITE-A3

Control Air Conditioning Corporation

BLDG. 'A'

AS-BUILT

11-30-17

NOTE: INSTALL THRUST BLOCK (TYP.) WHEN ▲ SHOWN

COORDINATION SIGN-OFF

	SIGNATURE	DATE
COORDINATION		
GENERAL CONTRACTOR		
HVAC DUCTWORK		
HVAC PIPING		
PLUMBING		
FIRE PROTECTION		
ELECTRICAL		
PNEUMATIC TUBE		
STRUCTURAL		
ARCHITECTURAL		

Control Air Conditioning Corporation

5240 E. La Palma, Anaheim, CA 92807 PH:(714) 777-8600 FAX:(714) 777-5662

NO.	DATE	REVISION
A	3-2-16	ISSUED FOR A&E REVIEW PHASE 3
B	4-18-16	ISSUED FOR A&E APPROVAL PHASE 3 (R1)
C	4-19-16	ISSUED FOR A&E APPROVAL PHASE 3 (R2)
D	4-29-16	ISSUED FOR A&E APPROVAL PHASE 3 (R3)
E	5-12-16	ISSUED FOR A&E APPROVAL PHASE 3 (R4)
F	6-16-16	ISSUED FOR A&E APPROVAL PHASE 3 (R5)
G	12-21-16	PROGRESS PRINTS
H	7-28-17	UPDATED PER LATEST HARDSCAPE & BACKGROUND BUILD-30
I	11-30-17	ISSUED FOR AS-BUILT

DRAWING TITLE: SANTA ANA COLLEGE CAC UNDERGROUND UTILITIES AREA 4

JOB TITLE: SANTA ANA COLLEGE QUAD INFRASTRUCTURE RENOVATION

JOB ADDRESS: 1530 WEST 17TH STREET SANTA ANA, CALIFORNIA 92706

DATE	11/25/15
SCALE	1/8" = 1'-0"
DRAWN BY	CJR
REF DWG.	C001
JOB NO.	157029
DRAWING NO.	CAC-SITE-A4

Control Air Conditioning Corporation

PARKING LOT #5

BLDG. 'C'

AS-BUILT
11-30-17

NOTE: INSTALL THRUST BLOCK (TYP.) WHEN SHOWN

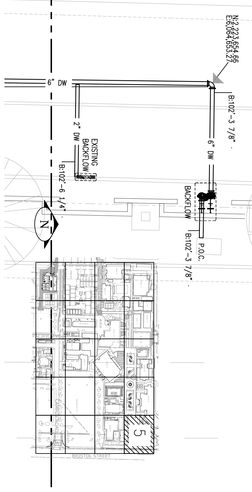

Dwg File:J:\157029 Santa Ana College\Shop_dwgs\PL DRAWINGS\UA-SITE\CAC-PL.dwg Plotted by: Ghitch 11-30-2017 1:48pm

Control Air Conditioning Corporation	
CAC-SITE-A5	DRAWING NO.
157029	JOB NO.
C001	REF DWG.
CJR	DRAWN BY
1/8" = 1'-0"	SCALE
11/25/15	DATE

DRAWING TITLE
SANTA ANA COLLEGE
CAC UNDERGROUND UTILITIES AREA 5

JOB TITLE
SANTA ANA COLLEGE
QUAD INFRASTRUCTURE RENOVATION

JOB ADDRESS
1530 WEST 17TH STREET
SANTA ANA, CALIFORNIA 92706

NO.	DATE	REVISION
A	12/4/15	ISSUED FOR A&E APPROVAL
B	12/8/15	ISSUED FOR A&E APPROVAL (R2)
C	1-8-16	ISSUED FOR A&E APPROVAL (R3)
D	12-21-16	PROGRESS PRINTS
E	7-28-17	UPDATED PER LATEST HARDSCAPE & BACKGROUND BULL-30
F	11-30-17	ISSUED FOR AS-BUILT

Control Air Conditioning Corporation
5200 E. La Palma, Anaheim, CA 92807 PH:(714) 777-8600 FAX:(714) 777-5062

COORDINATION SIGN-OFF

COORDINATION	SIGNATURE	DATE
GENERAL CONTRACTOR		
HVAC DUCTWORK		
HVAC PIPING		
PLUMBING		
FIRE PROTECTION		
ELECTRICAL		
PNEUMATIC TUBE		
STRUCTURAL		
ARCHITECTURAL		

BLDG. 'U'

(E) BLDG.

UP

AREA-1 AREA-2 AREA-6 AREA-7 AREA-11 AREA-12

AREA-2 AREA-3 AREA-7 AREA-8 AREA-12 AREA-13

N: 2223635.199
E: 6063449.847
INV.EL: 99.22
11.25°

INV.EL: 93.037
45°

(N) S.S. MANHOLE
101.91' RIM

2 1/2" DW

N: 2223632.307
E: 6063421.994
UNKNOWN INVERT
AND SIZE OF P.O.C.
FIELD TO VERIFY

N: 2223632.294
E: 6063425.963
INV.EL: 98.702

4" SD

INV EL:97.843'
90°

N: 2223622.059
E: 6063449.662
INV.EL: 98.086
90°

N: 2223521.838
E: 6063466.568

N: 2223615.973
E: 6063492.395
INV.EL: 99.07
C.B.

INV EL:98.579'
90°

N: 2223611.143
E: 6063422.083
UNKNOWN INVERT
AND SIZE OF P.O.C.
FIELD TO VERIFY

N: 2223610.905
E: 6063438.707
INV.EL: 98.702

N: 2223611.092
E: 6063425.659
INV.EL: 98.702

C.B.

N: 2223612.731
E: 6063466.409
INV.EL: 92.846
45°

N: 2223605.62
E: 6063473.354
INV.EL: 92.795

45°

S.O.V.

N: 2223595.653
E: 6063470.632
INV.EL: 97.119

N: 2223596.254
E: 6063438.481
INV.EL: 98.702

N: 2223576.897
E: 6063422.359
INV.EL: 96.879
(N) HYDRANT

N: 2223584.938
E: 6063431.177
INV.EL: 96.748

N: 2223584.4
E: 6063468.964
INV.EL: 96.748

INV EL:93.468'
TAP, JOIN

N: 2223567.964
E: 6063458.74
INV.EL: 93.675
90°

N: 2223567.996
E: 6063456.086
INV.EL: 96.536
CAPPED FOR
FUTURE

N: 2223565.414
E: 6063458.109
INV.EL: 98.2
C.B.

N: 2223553.968
E: 6063471.066
INV.EL: 96.023

N: 2223553.945
E: 6063473.71
C.O.T.G.

CUT BACK AND CAP

N: 2223554.069
E: 6063463.708
INV.EL: 96.186
UNKNOWN SIZE OF
P.O.C. FIELD TO
VERIFY, LOCATION
SHOWN ON C-BELOW
IS FURTHER SOUTH

N: 2223551.382
E: 6063473.668
INV.EL: 95.492

INV EL:93.583'
TAP, JOIN

N: 2223542.041
E: 6063479.026
INV.EL: 93.68
CAP FOR FUTURE

N: 2223519.776
E: 6063473.22
INV.EL: 95.4
(N) S.S. MANHOLE

N: 2223519.692
E: 6063480.208
INV.EL: 95.55
CAP FOR FUTURE

INV EL:93.746'
TAP, JOIN

N: 2223513.607
E: 6063478.618
INV.EL: 93.37
CAP FOR FUTURE

EXISTING
CULVERT
FROM NORTH
TIES IN

CUSTOM BASIN
STRUCTURE

N: 2223468.706
E: 6063462.521
INV.EL: 96.604
UNKNOWN SIZE OF
P.O.C. FIELD TO
VERIFY

N: 2223468.765
E: 6063472.49
C.O.T.G.

N: 2223473.992
E: 6063490.793
INV.EL: 92.58

N: 2223465.925
E: 6063472.443
INV.EL: 95.28

CUT BACK AND CAP

N: 2223468.392
E: 6063469.936
INV.EL: 96.372
45°

N: 2223462.093
E: 6063468.736
INV.EL: 95.874

N: 2223466.246
E: 6063488.582
INV.EL: 99.842

N: 2223458.468
E: 6063432.771
INV.EL: 97.8
90°

N: 2223459.991
E: 6063468.696
INV.EL: 94.997

INV EL:97.269'
90°

N: 2223444.978
E: 6063484.131
INV.EL: 98.528
C.B.

INV EL:98.254'
90°

N: 2223438.131
E: 6063466.876
INV.EL: 95.363
45°

N: 2223440.823
E: 6063432.52
INV.EL: 98.12

N: 2223436.918
E: 6063468.336
INV.EL: 91.954
S.D. 45°

N: 2223438.113
E: 6063468.386
INV.EL: 95.406
45°

N: 2223436.396
E: 6063468.381
INV.EL: 97.182

N: 2223434.708
E: 6063468.64
INV.EL: 96.894
45°

N: 2223406.678
E: 6063499.791
INV.EL: 97.185

N: 2223406.633
E: 6063501.874
INV.EL: 97.196
45°

N: 2223405.073
E: 6063501.473
INV.EL: 94.235
45°

N: 2223414.293
E: 6063466.629
INV.EL: 97.01
45°

N: 2223411.051
E: 6063471.653
INV.EL: 95.115
45°

N: 2223406.528
E: 6063506.653
INV.EL: 93.084
45°

N: 2223407.373
E: 6063468.067
INV.EL: 97.185
45°

N: 2223405.134
E: 6063468.74
INV.EL: 96.725
45°

N: 2223403.688
E: 6063506.399
INV.EL: 96.255
P.O.C.TO EXISTING

PRESSURE PIPING IN THIS AREA LESS
THAN 36" DOWN FROM F.S. TO BE
INCASED ENCASEMENT DETAILS TO BE
APPROVED BY THE CIVIL ENGINEER.
THRUST BLOCKING NOT REQUIRED
WHERE PIPING IS ENCASED

N: 2223410.087
E: 6063462.335
INV.EL: 97.01
45°

N: 2223402.556
E: 6063499.013
INV.EL: 95.913
45°

N: 2223402.554
E: 6063509.982
INV.EL: 96.187
C.O.T.G.

N: 2223402.555
E: 6063506.441
INV.EL: 96.1
45°

N: 2223404.302
E: 6063536.249
INV.EL: 94.943
45°

N: 2223404.354
E: 6063533.896
INV.EL: 92.898
45°

N: 2223405.934
E: 6063533.788
INV.EL: 93.084
45°

N: 2223405.882
E: 6063536.127
INV.EL: 95.113
45°

N: 2223405.197
E: 6063567.416
INV.EL: 95.113
45°

N: 2223405.146
E: 6063569.755
INV.EL: 93.084
45°

N: 2223403.56
E: 6063569.714
INV.EL: 92.907
45°

N: 2223403.612
E: 6063567.372
INV.EL: 94.943
45°

N: 2223404.826
E: 6063584.335
INV.EL: 93.095
45°

N: 2223404.777
E: 6063588.593
INV.EL: 95.214
45°

N: 2223403.182
E: 6063586.764
INV.EL: 95.049
45°

N: 2223403.232
E: 6063584.5
INV.EL: 92.92
45°

N: 2223391.968
E: 6063593.357
INV.EL: 97.345
P.O.C.TO EXISTING

N: 2223391.825
E: 6063599.791
INV.EL: 95.049
90° UNDER

INV EL:97.52'

N: 2223391.79
E: 6063601.353

INV EL:97.32'

N: 2223390.011
E: 6063602.755
INV.EL: 97.32
P.O.C.TO EXISTING

N: 2223404.448
E: 6063601.813
INV.EL: 95.214

N: 2223402.887
E: 6063600.036
INV.EL: 95.049

N: 2223393.45
E: 6063601.372
INV.EL: 95.214

N: 2223393.418
E: 6063602.83
INV.EL: 95.049

N: 2223391.715
E: 6063604.794
INV EL:97.12'

N: 2223388.05
E: 6063604.712
INV.EL: 96.945
P.O.C.TO EXISTING

N: 2223392.772
E: 6063632.365
INV.EL: 95.356

N: 2223407.903
E: 6063632.696
INV.EL: 95.356

N: 2223407.465
E: 6063652.66
INV.EL: 95.356
CONTINUES TO TEMP
WORK FOR U BLDG.

N: 2223405.864
E: 6063652.625
INV.EL: 95.049
CAP FOR FUTURE

N: 2223393.614
E: 6063633.882
INV.EL: 95.049

N: 2223391.07
E: 6063633.826
INV.EL: 95.049

N: 2223405.982
E: 6063462.275
INV.EL: 96.943

N: 2223405.727
E: 6063471.662
INV.EL: 96.712
45°

N: 2223405.804
E: 6063470.043
INV.EL: 95.388
45°

N: 2223392.095
E: 6063490.112
INV.EL: 95.057

N: 2223397.181
E: 6063524.394
INV.EL: 91.9
CAP FOR FUTURE

N: 2223388.671
E: 6063515.252
INV.EL: 91.81
(N) S.D. MANHOLE

N: 2223373.852
E: 6063508.287
INV.EL: 95
(N) S.S. MANHOLE
99.83' RIM

AS-BUILT

11-30-17

NOTE: EXISTING UTILITIES SHOWN FOR REFERENCE ONLY ACTUAL FIELD CONDITIONS MAY VARY

NOTE: INSTALL THRUST BLOCK (TYP.) WHEN SHOWN

N

7

COORDINATION SIGN-OFF

	SIGNATURE	DATE
COORDINATION		
GENERAL CONTRACTOR		
HVAC DUCTWORK		
HVAC PIPING		
PLUMBING		
FIRE PROTECTION		
ELECTRICAL TUBE		
PNEUMATIC TUBE		
STRUCTURAL		
ARCHITECTURAL		

Control Air Conditioning Corporation

5260 E. La Palma, Anaheim, CA 92807 PH:(714) 777-8600 FAX:(714) 777-0662

NO.	DATE	REVISION
A	12-19-15	PROGRESS PRINTS
B	1-13-16	PHASE 2 ISSUED FOR A&E APPROVAL
C	04-07-16	PHASE 4 ISSUED FOR A&E APPROVAL
D	7-27-16	ISSUED FOR FIELD CHANGE
E	8-3-16	PROGRESS PRINTS
F	12-21-16	PROGRESS PRINT
G	7-24-17	BULLETIN 40 PROGRESS PRINT
H	7-28-17	UPDATED FOR LATEST HARDSCAPE & BACKGROUND BULL-30
I	11-30-17	ISSUED FOR AS-BUILT

NO.	DATE	REVISION

DRAWING TITLE: CAC UNDERGROUND UTILITIES AREA 7

JOB TITLE: QUAD INFRASTRUCTURE RENOVATION

JOB ADDRESS: 1530 WEST 17TH STREET SANTA ANA, CALIFORNIA 92706

SANTA ANA COLLEGE

DATE	11/25/15
SCALE	1/8" = 1'-0"
DRAWN BY	CJR
REF DWG.	C001
JOB NO.	157029
DRAWING NO.	CAC-SITE-A7

Control Air Conditioning Corporation

Plot By: PAUL'S STATION Date And Time: 11/30/2017 2:57pm Plotted By: Elliott Drawing Name: P:\CAD\CAC UNDERGROUND UTILITIES AREA 7\CAC-SITE-A7.dwg

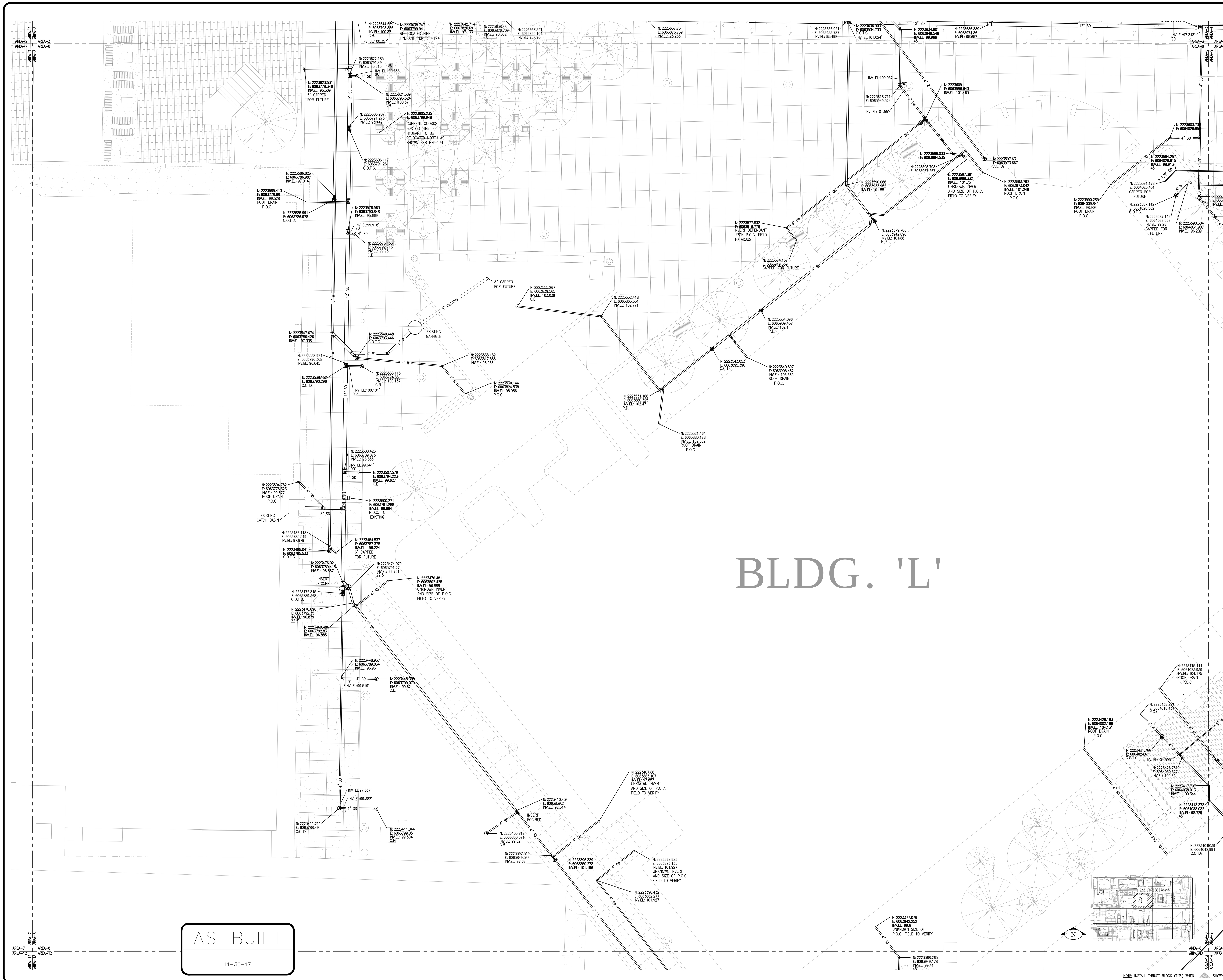

NOTE: INSTALL THRUST BLOCK (TYP.) WHEN ▲ SHOWN

COORDINATION SIGN-OFF

COORDINATION	SIGNATURE	DATE
GENERAL CONTRACTOR		
HVAC DUCTWORK		
HVAC PIPING		
PLUMBING		
FIRE PROTECTION		
ELECTRICAL		
PNEUMATIC TUBE		
STRUCTURAL		
ARCHITECTURAL		

Control Air Conditioning Corporation
5200 E. La Palma, Anaheim, CA 92807 PH:(714) 777-8600 FAX:(714) 777-5062

NO.	DATE	REVISION
A	12/4/15	ISSUED FOR A&E APPROVAL
B	3-2-16	ISSUED FOR A&E APPROVAL PHASE 3
C	4-18-16	ISSUED FOR A&E APPROVAL PHASE 3 (R1)
D	4-28-16	ISSUED FOR A&E APPROVAL PHASE 5
E	11-3-16	PROGRESS PRINT
F	12-21-16	PROGRESS PRINT
G	7-28-17	UPDATED PER LATEST HARDSCAPE @ BACKGROUND BULL-30
O	11-30-17	ISSUED FOR AS-BUILT

DRAWING TITLE: SANTA ANA COLLEGE CAC UNDERGROUND UTILITIES AREA 8

JOB TITLE: SANTA ANA COLLEGE QUAD INFRASTRUCTURE RENOVATION

JOB ADDRESS: 1530 WEST 17TH STREET SANTA ANA, CALIFORNIA 92706

Dwg File:J:\157029 Santa Ana College\Shop_dwgs\PL DRAWINGS\LVL-SITE\CAC-PL.dwg Plotted by: CReich 11-30-2017 2:12pm

DATE	11/25/15
SCALE	1/8" = 1'-0"
DRAWN BY	CJR
REF DWG.	C001
JOB NO.	157029
DRAWING NO.	CAC-SITE-A8

Control Air Conditioning Corporation

BLDG. 'D'

AS-BUILT

11-30-17

NOTE: INSTALL THRUST BLOCK (TYP.) WHEN ▲ SHOWN

COORDINATION SIGN-OFF

	SIGNATURE	DATE
CORPORATION		
GENERAL CONTRACTOR		
HVAC DUCTWORK		
HVAC PIPING		
PLUMBING		
FIRE PROTECTION		
ELECTRICAL		
PNEUMATIC TUBE		
STRUCTURAL		
ARCHITECTURAL		

Control Air Conditioning Corporation

5200 E. La Palma, Anaheim, CA 92807 PH:(714) 777-8600 FAX:(714) 777-0662

NO.	DATE	REVISION

NO.	DATE	REVISION
A	12/4/15	ISSUED FOR A&E APPROVAL
B	12/8/15	ISSUED FOR A&E APPROVAL (R2)
C	1-8-16	ISSUED FOR A&E APPROVAL (R3)
D	2-18-16	ISSUED FOR FOREMAN REVIEW
E	3-1-16	ISSUED FOR A&E APPROVAL PHASE 3
F	4-18-16	ISSUED FOR A&E APPROVAL PHASE 3 (R1)
G	4-19-16	ISSUED FOR A&E APPROVAL PHASE 3 (R2)
H	5-16-16	ISSUED FOR A&E APPROVAL PHASE 3 (R3)
J	6-16-16	ISSUED FOR A&E APPROVAL PHASE 3 (R4)

NO.	DATE	REVISION
	12-21-16	PROGRESS PRINT
A	7-6-17	REVISED PER BULLETIN 30
B	7-28-17	UPDATED PER LATEST HARDSCAPE & BACKGROUND BULL-30
C	11-30-17	ISSUED FOR AS-BUILT

DRAWING TITLE: SANTA ANA COLLEGE CAC UNDERGROUND UTILITIES AREA 9

JOB TITLE: SANTA ANA COLLEGE QUAD INFRASTRUCTURE RENOVATION

JOB ADDRESS: 1530 WEST 17TH STREET SANTA ANA, CALIFORNIA 92706

DATE: 11/25/15

SCALE: 1/8" = 1'-0"

DRAWN BY: CJR

REF DWG.: C001

JOB NO.: 157029

DRAWING NO.: CAC-SITE-A9

Control Air Conditioning Corporation

Last Plotted:11/30/17 Saved As: S:\Dwg\Civil\Area 9\CAC-SITE-A9.dwg Plotted By: ROach - 11-30-2017 8:19am

BLDG. 'N'

BLDG. 'P'

EXISTING SD ELEVATIONS AND LOCATION ARE APPROXIMATE

INV EL:102.32'

INV EL:102.32'

INV EL:102.32'

AS-BUILT

11-30-17

NOTE: INSTALL THRUST BLOCK (TYP.) WHEN ▲ SHOWN

COORDINATION SIGN-OFF

CORPORATION	SIGNATURE	DATE
GENERAL CONTRACTOR		
HVAC DUCTWORK		
HVAC PIPING		
PLUMBING		
FIRE PROTECTION		
ELECTRICAL		
PNEUMATIC TUBE		
STRUCTURAL		
ARCHITECTURAL		

Control Air Conditioning Corporation

5200 E. La Palma, Anaheim, CA 92807 PH:(714) 777-8500 FAX:(714) 777-0562

NO.	REVISION	DATE
	PROGRESS PRINT	12-21-16
	ISSUED FOR AS-BUILT	11-30-17

NO.	REVISION	DATE
A	ISSUED FOR A&E APPROVAL	12/4/15
B	ISSUED FOR A&E APPROVAL (R2)	12/8/15
A	ISSUED FOR A&E APPROVAL (R3)	8-2-16
B	ISSUED FOR FOREMAN REVIEW	2-18-16
A	ISSUED FOR A&E APPROVAL PHASE 3	2-25-16
A	ISSUED FOR A&E APPROVAL PHASE 3 (R1)	4-18-16
A	ISSUED FOR A&E APPROVAL PHASE 3 (R2)	4-19-16
A	ISSUED FOR A&E APPROVAL PHASE 3 (R3)	5-16-16
A	UPDATED PER LATEST HARDSCAPE & BACKGROUND BULL-30	7-28-17

DRAWING TITLE: SANTA ANA COLLEGE CAC UNDERGROUND UTILITIES AREA 10

JOB TITLE: SANTA ANA COLLEGE QUAD INFRASTRUCTURE RENOVATION

JOB ADDRESS: 1530 WEST 17TH STREET SANTA ANA, CALIFORNIA 92706

DATE: 11/25/15

SCALE: 1/8" = 1'-0"

DRAWN BY: CJR

REF DWG.: C001

JOB NO.: 157029

DRAWING NO.: CAC-SITE-A10

Control Air Conditioning Corporation

Dwg File:11/30/2017 Saved: Wed 11/29/2017 3:47:47 PM By: ESTIMATE2 Last Edit By: CJR Xrefs: Plotted By: CJR

AS-BUILT

11-30-17

AREA-11 AREA-12 AREA-17 AREA-12

AREA-11 AREA-12 AREA-6 AREA-7 AREA-12 AREA-7

UP

6" DW 6" DW 6" DW 6" DW 6" DW

SDV SDV SDV

N:2223274.574
E:6663465.329

N:2223274.522
E:6663465.329

EXPOSE ALL PRESSURE PIPING IN THIS AREA LESS THAN 36" DOWN FROM F.S. EXCAVATION. DETAILS TO BE APPROVED BY PLAN CHECK. THRUST BLOCKING NOT REQUIRED WHERE PIPING IS ENCASED

INV EL=94.45'

9%

INV EL=87.18'

N:2223330.906
E:6663465.051

N:2223373.852
E:6663487.287
RIM EL=98.61
(N) S.S. MANHOLE
99.35' RIM

(E)36" SD 36" SD 36" SD 36" SD 12" W 36" SD 12"

12" SS 12" W 12" SS

36" SD

N:2223330.446
E:6663517.447
INV.EL= 91.406

N:2223330.811
E:6663517.447
INV.EL= 91.498

N:2223152.284
E:6663503.141
P.W.L.
INV.EL= 90.13

N:6223330.511
E:6663502.755
RIM EL=98.61
P.W.L.S. EXISTING

E: 6663464.214
RIM EL=98.61
P.W.L.S. EXISTING

MCHS BLDG.

MCHS BLDG.

BLDG. 'B'

NO PARKING

VAN

NOTE: EXISTING UTILITIES SHOWN FOR REFERENCE ONLY. ACTUAL FIELD CONDITIONS MAY VARY

NOTE: INSTALL THRUST BLOCK (TYP.) WHEN SHOWN

AREA-12 AREA-17 AREA-12 AREA-13 AREA-12 AREA-7 AREA-12 AREA-13 AREA-7 AREA-8

Dwg File:J:\157029 Santa Ana College\Shop_Dwgs\PL DRAWINGS\pl_SITE\CAC-PL.dwg Plotted by: Chloch 11-30-2017 2:22pm

Control Air Conditioning Corporation

CAC-SITE-A12

DRAWING NO.	157029
JOB NO.	C001
REF DWG.	C.I.R.
DRAWN BY	
SCALE	1/8" = 1'-0"
DATE	11/25/15

DRAWING TITLE
SANTA ANA COLLEGE
CAC UNDERGROUND UTILITIES AREA 12

JOB TITLE
SANTA ANA COLLEGE
QUAD INFRASTRUCTURE RENOVATION

JOB ADDRESS
1530 WEST 17TH STREET
SANTA ANA, CALIFORNIA 92706

NO.	DATE	REVISION
0	12/19/15	PROGRESS PRINTS
1	1-13-16	PHASE-2 ISSUED FOR A&E APPROVAL
2	8-2-16	ISSUED FOR AS BUILT (PHASE 1)
3	12-21-16	PROGRESS PRINT
4	7-28-17	UPDATED PER LATEST HARDSCAPE & BACKGROUND BULL-30
5	11-30-17	ISSUED FOR AS-BUILT

Control Air Conditioning Corporation
5200 E. La Palma, Anaheim, CA 92807 PH:(714) 777-9600 FAX:(714) 777-5062

COORDINATION SIGN-OFF

COORDINATION	SIGNATURE	DATE
GENERAL CONTRACTOR		
HVAC DUCTWORK		
HVAC PIPING		
PLUMBING		
FIRE PROTECTION		
ELECTRICAL		
PNEUMATIC TUBE		
STRUCTURAL		
ARCHITECTURAL		

BLDG. 'J'

BLDG. 'K'

BLDG. 'J'

BLDG. 'J'

AREA-7 AREA-12 AREA-8 AREA-13

AREA-8 AREA-9 AREA-13 AREA-14

AREA-12 AREA-17 AREA-13 AREA-18

AREA-13 AREA-18 AREA-1 AREA-19

P.O.C. FIELD TO VERIFY

N: 2223368.265
E: 6063949.178
INV.EL: 99.41
45°

4" SD

N: 2223348.815
E: 6063948.656
INV.EL: 99.3

N: 2223348.986
E: 6063961.343
INV.EL: 100.37
C.B.

3" DW

INV EL:101.927'

N: 2223337.818
E: 6063903.712
90°

INV EL:100.928'

N: 2223332.323
E: 6063900.538
INV.EL: 98.51

N: 2223327.274
E: 6063895.415
INV.EL: 99.37
C.B.

INV EL:99.335'
90°

N: 2223330.483
E: 6063901.982
INV.EL: 98.533

N: 2223329.236
E: 6063902.887
C.O.T.G.

N: 2223329.788
E: 6063904.397
INV.EL: 98.788
45°

N: 2223330.235
E: 6063903.978
INV.EL: 98.783
45°

N: 2223329.02
E: 6063933.207
INV.EL: 99.06

INV EL:100.036'
90°

N: 2223328.469
E: 6063948.381
C.O.T.G.

N: 2223328.499
E: 6063947.39
INV.EL: 99.176

N: 2223321.041
E: 6063933.934
INV.EL: 100.15
C.B.

N: 2223335.276
E: 6063999.132
INV.EL: 100.928

AS-BUILT

11-30-17

NOTE: INSTALL THRUST BLOCK (TYP.) WHEN ▲ SHOWN

N

13

COORDINATION SIGN-OFF

	SIGNATURE	DATE
COORDINATION		
GENERAL CONTRACTOR		
HVAC DUCTWORK		
HVAC PIPING		
PLUMBING		
FIRE PROTECTION		
ELECTRICAL		
PNEUMATIC TUBE		
STRUCTURAL		
ARCHITECTURAL		

Control Air Conditioning Corporation

5200 E. La Palma, Anaheim, CA 92807 PH:(714) 777-8600 FAX:(714) 777-0662

NO.	DATE	REVISION

NO.	DATE	REVISION
A	12/4/15	ISSUED FOR AAE APPROVAL PHASE 1
B	12/8/15	ISSUED FOR AAE APPROVAL PHASE 1 (R2)
C	4-28-16	ISSUED FOR AAE APPROVAL PHASE 5
D	11-3-16	PROGRESS PRINT
E	12-21-16	PROGRESS PRINT
F	7-28-17	UPDATED PER LATEST HARDSCAPE & BACKGROUND BULL-30
G	11-30-17	ISSUED FOR AS-BUILT

NO.	DATE	REVISION
G	11-30-17	ISSUED FOR AS-BUILT

DRAWING TITLE: SANTA ANA COLLEGE
CAC UNDERGROUND UTILITIES AREA 13

JOB TITLE: SANTA ANA COLLEGE
QUAD INFRASTRUCTURE RENOVATION

JOB ADDRESS: 1530 WEST 17TH STREET
SANTA ANA, CALIFORNIA 92706

DATE: 11/25/15

SCALE: 1/8" = 1'-0"

DRAWN BY: CJR

REF DWG.: C001

JOB NO.: 157029

DRAWING NO.: CAC-SITE-A13

Control Air Conditioning Corporation

Date Plotted: 11/30/2017 2:24pm

AREA–8 AREA–9 AREA–13 AREA–14

AREA–9 AREA–10 AREA–14 AREA–15

N: 2223360.669
E: 6064167.182
INV.EL: 96.46
(N) S.S. MANHOLE
104.00' RIM

8" SS

12" FM

8" DW

PARKING LOT #6

AS–BUILT

8/2/2016 (PHASE 1)

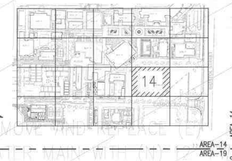

N

AREA–13 AREA–14 AREA–18 AREA–19

AREA–14 AREA–15 AREA–19 AREA–20

NOTE: INSTALL THRUST BLOCK (TYP.) WHEN SHOWN

COORDINATION SIGN–OFF

	SIGNATURE	DATE
COORDINATION		
GENERAL CONTRACTOR		
MDC DUCTWORK		
MDC PIPING		
PLUMBING		
FIRE PROTECTION		
ELECTRICAL		
PNEUMATIC TUBE		
STRUCTURAL		
ARCHITECTURAL		

Control Air Conditioning Corporation

5200 E. La Palma, Anaheim, CA 92807 PH:(714) 777-8660 FAX:(714) 777-5662

NO.	DATE	REVISION

NO.	DATE	REVISION
A	12/4/15	ISSUED FOR AAE APPROVAL
B	12/9/15	ISSUED FOR AAE APPROVAL (R2)
C	1-8-16	ISSUED FOR AAE APPROVAL (R3)
D	8-2-16	ISSUED FOR AS BUILT (PHASE 1)
E	7-28-17	UPDATED PER LATEST HARDSCAPE & BACKGROUND BULL-30

DRAWING TITLE: SANTA ANA COLLEGE CAC UNDERGROUND UTILITIES AREA 14

JOB TITLE: SANTA ANA COLLEGE QUAD INFRASTRUCTURE RENOVATION

JOB ADDRESS: 1530 WEST 17TH STREET SANTA ANA, CALIFORNIA 92706

DATE	11/25/15
SCALE	1/8" = 1'-0"
DRAWN BY	CJR
REF DWG.	C001
JOB NO.	157029
DRAWING NO.	CAC–SITE–A14

Control Air Conditioning Corporation

AREA-10

AREA-16

AREA-16
AREA-17

O/P SEWER
AREA-16

UP

TENNIS C

PA

N: 2223038.073
E: 6063038.775
P.O.C.

N: 2223035.885
E: 6063038.746
INV.EL: 96.817

3" DW

N: 2223036.165
E: 6063027.303
C.O.T.G

6" W

N: 2223042.213
E: 6063099.416
C.O.T.G.

N: 2223042.21
E: 6063100.062
INV.EL: 94.85

N: 2223035.029
E: 6063103.967
INV.EL: 96.817

N: 2223041.903
E: 6063131.437
INV.EL: 94.614

6" SD

N: 2223038.224
E: 6063131.007
INV.EL: 97.523

N: 2223040.9
E: 6063208.067
C.O.T.G.

N: 2223050.024
E: 6063285.5
INV.EL: 94.96
P.O.C.

EXISTING 8" FW

N: 2223048.03
E: 6063289.68
INV.EL: 94.034

6" FW

N: 2223047.887
E: 6063303.525
INV.EL: 94.875

N: 2223049.74
E: 6063307.138
INV.EL: 94.875

N: 2223043.397
E: 6063278.367
INV.EL: 93.103
P.O.C.

N: 2223583.542
E: 6064522.861
C.O.T.G.

P.O.C.

6" SD

N: 2223039.994
E: 6063277.101
INV.EL: 93.117

N: 2223040.395
E: 6063303.48
INV.EL: 94.875

N: 2223040.348
E: 6063307.067
INV.EL: 94.875

N: 2223040.372
E: 6063305.273
P.I.V. FOR
CENTRAL
PLANT

N: 2223015.989
E: 6063099.715
INV.EL: 94.997
45°

N: 2223014.521
E: 6063098.208
INV.EL: 95.011
45°

N: 2223012.107
E: 6063098.177
INV.EL: 95.028

N: 2223007.565
E: 6063098.117
INV.EL: 95.06
45°

N: 2223006.057
E: 6063099.586
INV.EL: 95.074
45°

4" SD

3" DW

N: 2223011.664
E: 6063111.659
INV.EL: 97.719

P.O.C.

N: 2222999.062
E: 6063112.203
INV.EL: 98.317
P.O.C.

N: 2222997.49
E: 6063113.94
INV.EL: 94.431
P.O.C.

N: 2222998.271
E: 6063090.936
INV.EL: 93.3

11.25'

6" SS

N: 2222996.617
E: 6063062.47
C.O.T.G

6" SS

N: 2222995.176
E: 6063103.497

N: 2223000.959
E: 6063282.315
INV.EL: 97.969
P.O.C.

N: 2223000.959
E: 6063284.943
INV.EL: 93.357
C.B.

N: 2222981.532
E: 6063284.683
INV.EL: 93.509
C.B.

6" SS

N: 2222945.276
E: 6063110.067
INV.EL: 94.35
P.O.C.

N: 2223583.542
E: 6064522.861
C.O.T.G.

N: 2222936.006
E: 6063098.679
INV.EL: 95.59

4" SD

N: 2222935.589
E: 6063110.684
INV.EL: 97.75
P.O.C.

N: 2222938.619
E: 6063281.129
INV.EL: 93.84
C.B.

6" SS

N: 2222916.457
E: 6063191.076
INV.EL: 96.098

8" FW

N: 2222916.459
E: 6063280.753
INV.EL: 93.988

4" SD

INV EL:94.025"

N: 2222898.307
E: 6063280.521

INV EL:96.954"

N: 2222912.774
E: 6063293.549
INV.EL: 96.96
C.B.

N: 2223583.542
E: 6064522.861
C.O.T.G.

N: 2222908.395
E: 6063121.671
INV.EL: 97.685
P.O.C.

N: 2222901.072
E: 6063146.352
INV.EL: 97.75
P.O.C.

N: 2222907.513
E: 6063188.618
INV.EL: 97.75

N: 2222904.519
E: 6063188.461
C.O.T.G.

N: 2222900.521
E: 6063190.867
INV.EL: 96.098

N: 2222903.447
E: 6063219.394
INV.EL: 96.25
P.O.C.

N: 2222902.943
E: 6063257.808
INV.EL: 96.25
P.O.C.

N: 2222899.226
E: 6063280.533
INV.EL: 94.119

N: 2222898.307
E: 6063280.521
C.O.T.C.

N: 2222905.597
E: 6063098.281
INV.EL: 95.803

N: 2222905.557
E: 6063109.359
INV.EL: 95.845

N: 2222905.4
E: 6063121.271
INV.EL: 96.009

N: 2222905.374
E: 6063123.512
INV.EL: 96.088
45°

N: 2222899.083
E: 6063144.344
INV.EL: 97.5
P.O.C.

N: 2222904.973
E: 6063153.736
INV.EL: 96.656
45°

N: 2222904.531
E: 6063187.542
INV.EL: 97.347

N: 2222899.477
E: 6063216.972
C.O.T.G.

N: 2222899.462
E: 6063219.991
INV.EL: 94.775

N: 2222899.004
E: 6063258.345
INV.EL: 94.375

N: 2222897.272
E: 6063287.702
INV.EL: 94.119

N: 2222898.277
E: 6063130.764
INV.EL: 96.244
45°

N: 2222898.072
E: 6063146.833
INV.EL: 96.491
45°

N: 2222898.086
E: 6063145.155
INV.EL: 96.404

N: 2222898.542
E: 6063190.841
INV.EL: 94.119

N: 2222885.118
E: 6063110.884
INV.EL: 96.47
C.B.

N: 2222898.101
E: 6063143.921
INV.EL: 96.399

4" SD

N: 2222882.064
E: 6063343.721
INV.EL: 96.82
C.B.

N: 2222881.822
E: 6063362.161
INV.EL: 96.50
P.O.C.

6" SD

ZONE OF INFLUENCE

VIEW 1
1/2"=1'-0"

6" FW

6" SD

ZONE OF INFLUENCE

VIEW 2
1/2"=1'-0"

AS-BUILT

11-30-17

O/P SEWER
AREA-16

NOTE: EXISTING UTILITIES SHOWN FOR REFERENCE ONLY ACTUAL FIELD CONDITIONS MAY VARY

NOTE: INSTALL THRUST BLOCK (TYP.) WHEN ▲ SHOWN

N

16

COORDINATION SIGN-OFF

	SIGNATURE	DATE
COORDINATION		
GENERAL CONTRACTOR		
MAS. DUCTWORK		
HVAC PIPING		
PLUMBING		
FIRE PROTECTION		
ELECTRICAL		
PNEUMATIC TUBE		
STRUCTURAL		
ARCHITECTURAL		

Control Air Conditioning Corporation

5260 E. La Palma, Anaheim, CA 92807 PH:(714) 777-8600 FAX:(714) 777-5662

NO.	DATE	REVISION
A	2-24-16	ISSUED FOR A&E APPROVAL
B	3-4-16	ISSUED FOR A&E APPROVAL (R2)
C	3-11-16	ISSUED FOR A&E APPROVAL (R3)
D	3-14-16	ISSUED FOR A&E APPROVAL (R4)
E	3-18-16	ISSUED FOR A&E APPROVAL (R5)
F	4-5-16	ISSUED FOR REVIEW OF PROPOSAL FOR CUP SEWER
G	4-11-16	ISSUED FOR A&E APPROVAL (R6)
H	10-10-16	PROGRESS PRINT
J	12-8-16	PROGRESS PRINT

NO.	DATE	REVISION
	12-21-16	PROGRESS PRINT
A	7-28-17	UPDATED PER LATEST HARDSCAPE & BACKGROUND BULL-30
B	11-30-17	ISSUED FOR AS-BUILT

DRAWING TITLE: SANTA ANA COLLEGE
CAC UNDERGROUND UTILITIES AREA 16

JOB TITLE: SANTA ANA COLLEGE
QUAD INFRASTRUCTURE RENOVATION

JOB ADDRESS: 1530 WEST 17TH STREET
SANTA ANA, CALIFORNIA 92706

DATE: 11/25/15
SCALE: 1/8" = 1'-0"
DRAWN BY: CJR
REF DWG.: C001
JOB NO.: 157029
DRAWING NO.: CAC-SITE-A16

Control Air Conditioning Corporation

Date:11/30/2017 Saved As:C:\Dwg\Cmc Jobs\Pc Jobs\157029 CAC\CAC-Pw.dwg Plotted By: Chuck 11-30-2017 8:49am

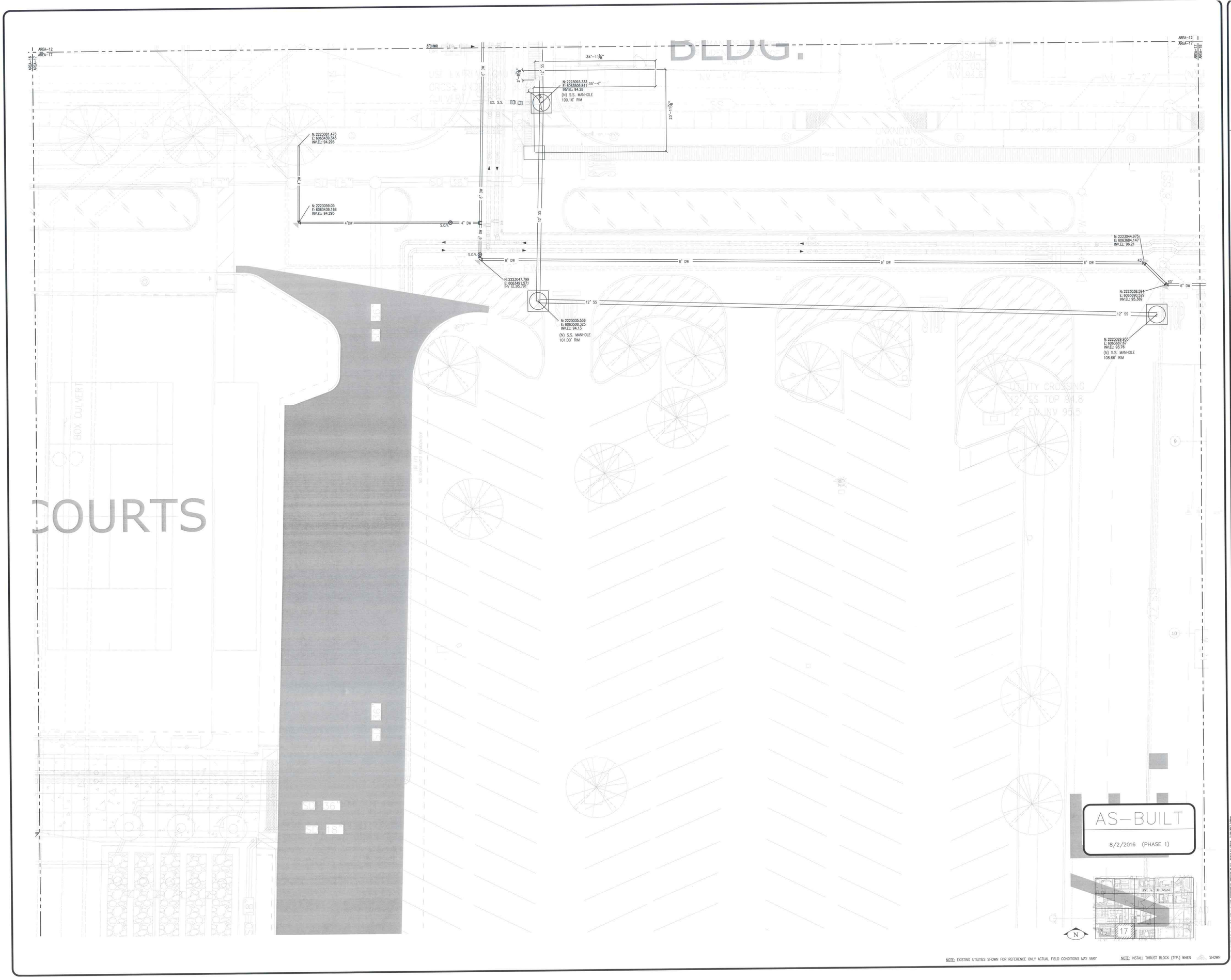

NOTE: EXISTING UTILITIES SHOWN FOR REFERENCE ONLY ACTUAL FIELD CONDITIONS MAY VARY

NOTE: INSTALL THRUST BLOCK (TYP.) WHEN SHOWN

COORDINATION SIGN-OFF

COORDINATION	SIGNATURE	DATE
GENERAL CONTRACTOR		
HVAC DUCTWORK		
HVAC PIPING		
PLUMBING		
FIRE PROTECTION		
ELECTRICAL		
PNEUMATIC TUBE		
STRUCTURAL		
ARCHITECTURAL		

Control Air Conditioning Corporation
5200 E. La Palma, Anaheim, CA 92807 PH:(714) 777-8600 FAX:(714) 777-5862

NO.	DATE	REVISION
A	12/19/15	PROGRESS PRINTS
B	1-13-16	PHASE-2 ISSUED FOR AME APPROVAL
D	8-2-16	ISSUED FOR AS BUILT (PHASE 1)
E	7-28-17	UPDATED PER LATEST HARDSCAPE @ BACKGROUND BULL-30

DRAWING TITLE: SANTA ANA COLLEGE CAC UNDERGROUND UTILITIES AREA 17

JOB TITLE: SANTA ANA COLLEGE QUAD INFRASTRUCTURE RENOVATION

JOB ADDRESS: 1530 WEST 17TH STREET SANTA ANA, CALIFORNIA 92706

DATE	11/25/15
SCALE	1/8" = 1'-0"
DRAWN BY	CJR
REF DWG.	C001
JOB NO.	157029
DRAWING NO.	CAC-SITE-A17

Control Air Conditioning Corporation

AREA-13
AREA-T8

AREA-13
AREA-T8

AREA-13
AREA-18

AREA-13
AREA-18

N: 2223038.398
E: 6063752.452
EXISTING CROSSING
-2'-6" F.S. +/-
FIELD TO VERIFY

N: 2223038.385
E: 6063746.533
EXISTING CROSSING
-2'-5" F.S. +/-
FIELD TO VERIFY

N: 2223040.337
E: 6063802.282
INV.EL: 94.268
CAP FOR FUTURE

N: 2223038.202
E: 6063802.25
INV.EL: 94.1

BULLETIN 10

N: 2223038.144
E: 6063818.706
EXISTING CROSSING
-2'-1" F.S. +/-
FIELD TO VERIFY

N: 2223038.148
E: 6063824.46
EXISTING CROSSING
-3'-5" F.S. +/-
FIELD TO VERIFY

N: 2223037.956
E: 6063817.823
EXISTING CROSSING
-4'-10" F.S. +/-
PER McCarthy
12-15-15
FIELD TO VERIFY

N: 2223042.39
E: 6063871.818
INV.EL: 96.081
45°

N: 2223042.347
E: 6063874.986
INV.EL: 96.082
45°

N: 2223037.393
E: 6063866.813
INV.EL: 94.783
45°

FIELD CONDITION
REQUIRED ROUTING
AROUND VAULT

N: 2223037.504
E: 6063870.679
EXISTING CROSSING
-4'-10" F.S. +/-
PER McCarthy
12-15-15
FIELD TO VERIFY

N: 2223037.39
E: 6063879.798
INV.EL: 96.082
45°

N: 2223037.02
E: 6063903.201
EXISTING CROSSING
-2'-6" F.S. +/-
FIELD TO VERIFY

N: 2223036.841
E: 6063915.569
NEW ELECTRICAL CROSSING
98.708' +/- TO BOTTOM
FIELD TO AVOID

N: 2223036.941
E: 6063912.238
EXISTING CROSSING
-2'-8" F.S. +/-
FIELD TO VERIFY

N: 2223035.847
E: 6063982.156
EXISTING CROSSING
-1'-1" F.S. +/-
FIELD TO VERIFY

6" DW

CDC BLDG.

CDC BLDG.

LINES TERMINATED AT BUILDING

NOTE: EXISTING UTILITIES SHOWN FOR REFERENCE ONLY ACTUAL FIELD CONDITIONS MAY VARY

NOTE: INSTALL THRUST BLOCK (TYP.) WHEN SHOWN

COORDINATION SIGN-OFF

	SIGNATURE	DATE
COORDINATION		
GENERAL CONTRACTOR		
HVAC DUCTWORK		
HVAC PIPING		
PLUMBING		
FIRE PROTECTION		
ELECTRICAL		
PNEUMATIC TUBE		
STRUCTURAL		
ARCHITECTURAL		

Control Air Conditioning Corporation
5260 E. La Palma, Anaheim, CA 92807 PH:(714) 777-8600 FAX:(714) 777-5662

NO.	DATE	REVISION

NO.	DATE	REVISION

NO.	DATE	REVISION
A	12/19/15	PROGRESS PRINTS
B	1-15-16	PHASE-2 ISSUED FOR A&E APPROVAL
C	7-14-16	REVISED PER BULLETIN 10

DRAWING TITLE
SANTA ANA COLLEGE
CAC UNDERGROUND UTILITIES AREA 18

JOB TITLE
SANTA ANA COLLEGE
QUAD INFRASTRUCTURE RENOVATION

JOB ADDRESS
1530 WEST 17TH STREET
SANTA ANA, CALIFORNIA 92706

DATE	11/25/15
SCALE	1/8" = 1'-0"
DRAWN BY	CJR
REF DWG.	C001
JOB NO.	157029
DRAWING NO.	CAC-SITE-A18

Control Air Conditioning Corporation

The Plot 11/25/15 Date As Drawn/Plot Area/PL 3000/C001-SITEDATA.dwg Printed by: Chris 7-14-2016 10:13am

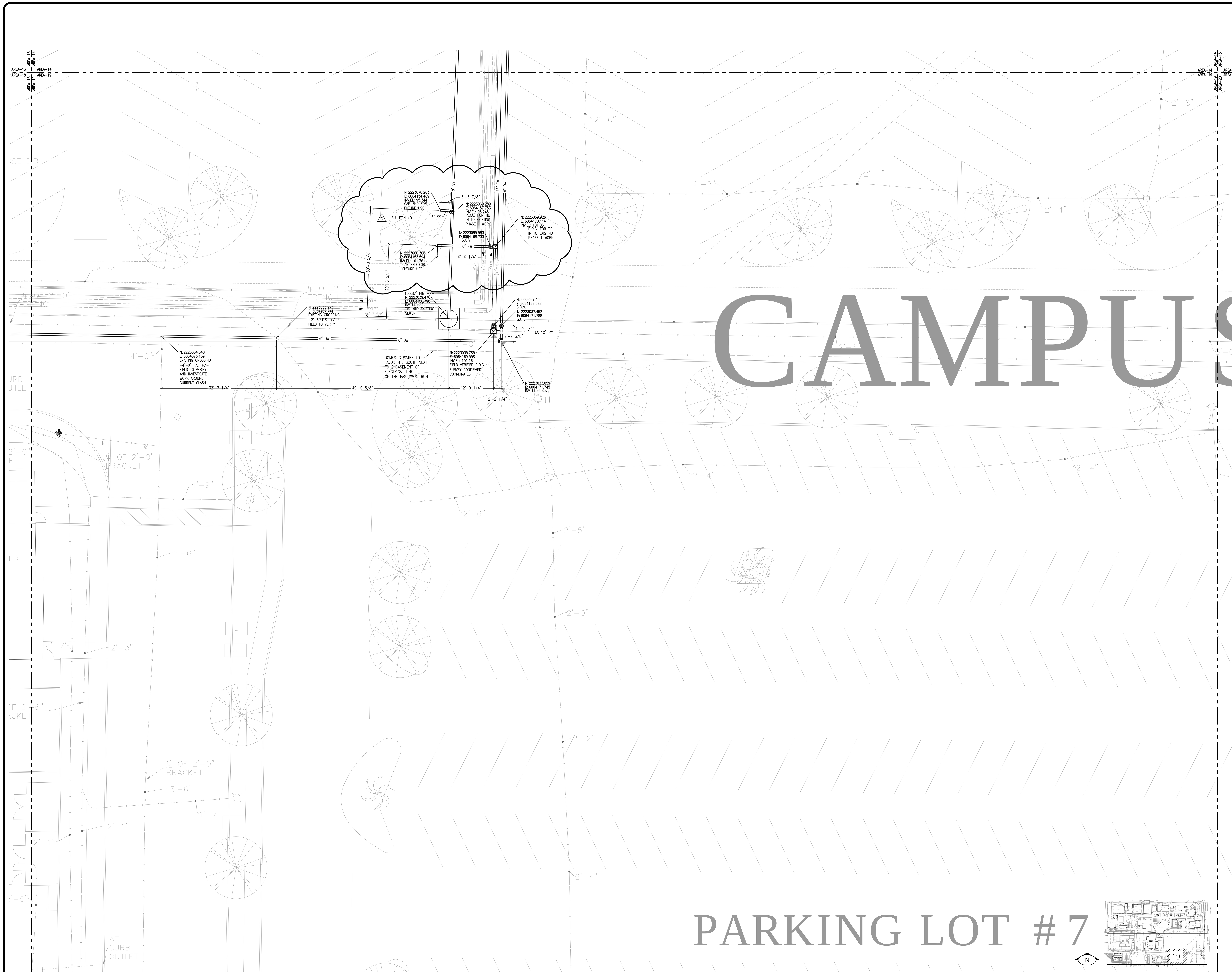

NOTE: EXISTING UTILITIES SHOWN FOR REFERENCE ONLY ACTUAL FIELD CONDITIONS MAY VARY

NOTE: INSTALL THRUST BLOCK (TYP.) WHEN ▲ SHOWN

COORDINATION SIGN-OFF

COORDINATION	SIGNATURE	DATE
GENERAL CONTRACTOR		
HVAC DUCTWORK		
HVAC PIPING		
PLUMBING		
FIRE PROTECTION		
ELECTRICAL		
PNEUMATIC TUBE		
STRUCTURAL		
ARCHITECTURAL		

Control Air Conditioning Corporation
5200 E. La Palma, Anaheim, CA 92807 PH:(714) 777-8600 FAX:(714) 777-5062

NO.	DATE	REVISION
A	12/4/15	PHASE 1 ISSUED FOR A&E APPROVAL
B	12/8/15	PHASE 1 ISSUED FOR A&E APPROVAL (R2)
C	12/19/15	PROGRESS PRINTS
D	1-8-16	PHASE 1 ISSUED FOR A&E APPROVAL (R3)
F	1-12-16	PHASE 2 ISSUED FOR A&E APPROVAL
G	7-14-16	REVISED PER BULLETIN 10

DRAWING TITLE: SANTA ANA COLLEGE CAC UNDERGROUND UTILITIES AREA 19

JOB TITLE: SANTA ANA COLLEGE QUAD INFRASTRUCTURE RENOVATION

JOB ADDRESS: 1530 WEST 17TH STREET SANTA ANA, CALIFORNIA 92706

DATE	11/25/15
SCALE	1/8" = 1'-0"
DRAWN BY	CJR
REF DWG.	C001
JOB NO.	157029
DRAWING NO.	CAC-SITE-A19

Control Air Conditioning Corporation

Dwg File:J:\157029 Santa Ana College\Shop_dwgs\PL DRAWINGS\LVL-SITE\CAC-PL.dwg Plotted by: Creich 7-14-2016 10:12am

SANTA ANA COLLEGE

AACS – ALARM AND ACCESS CONTROL SYSTEM

COMPUTERS AND PHERIPHALS				DESCRIPTION	ELECTRICAL BOX	HEIGHT
WALL	FLOOR	OTHER	RACK			
				AACS – ALARM AND OR ACCESS CONTROL EQUIPMENT	–	–

READERS AND SIGNALING DEVICES			DESCRIPTION	ELECTRICAL BOX	HEIGHT
WALL	CEILING	OTHER			
			RDR – READER, WALL SWITCH	4" SQ W/VERT SQ RING	48" AFF UON
			CT – CONTACT, RECESSED SPOT	1/4" HOLE 6" FROM JAM UON	
			RTE – REQUEST TO EXIT	4" SQ W/HORZ SQ RING	
			JUNCTION BOX	4" SQ W/VERT SQ RING	

STUBBED	READER / DOOR ASSEMBLY	EDP – EGRESS PANEL
	RDR-1 RDR-2 RTE-1 LK-1 CT-X CT-Y	

CCTV – CLOSED CIRCUIT VIDEO SYSTEM

CAMERAS				ELECTRICAL BOX	HEIGHT	DETAIL
WALL	CEILING	OTHER				
			CAM – FLUSH OR CEILING/WALL W/BACKBOX	4S DEEP WITH 3-GANG RING		
			CAM – WALL MOUNTED CAMERA	4S DEEP WITH 2-GANG RING		
			CAM – PENDANT CEILING MOUNTED CAMERA	4S DEEP WITH 2-GANG RING		
			PTZ-PT – PTZ CAMERA ON WALL	4S DEEP WITH 3-GANG RING		

*LENSING

DISTANCE FT	5	10	15	20
F=1/4" 3.6mm	H	5	10	15	20
	V	3.4	7.5	11.3	15
8.0mm	H	2.2	5	7.5	10
	V	1.8	3.73	5.65	7.5
12mm	H	2.2	5	7.5	10
	V	1.9	3.73	5.65	7.5

DISTANCE FT	8	15	15	20
F=1/3" 2.8mm	H	8.8	17.8	23.7	35.8
	V	6.7	13.4	20	26.8
6.0mm	H	5.8	17.8	23.7	35.8
	V	6.7	13.4	20	26.8
12mm	H	5.8	17.8	23.7	35.8
	V	6.7	13.4	20	26.8

DISTANCE x.50' F=1/4" — FOV 10 X 7.5 — DISTANCE – HEIGHT – WIDTH — FOV 3 X 2.10 FOV 5.3 X 3.973

AMS – AUDIO MANAGEMENT SYSTEM

INTERCOM MASTER AND SUB STATIONS					ELECTRICAL BOX	HEIGHT	DETAIL
WALL	FLOOR	OTHER	RACK				
				IES – INTERCOM SUBSTATION			
				IEM – INTERCOM MASTER			

SOUND REINFORCEMENT					ELECTRICAL BOX	HEIGHT	DETAIL
				SND – SOUNDER	4" SQ W/VERT SQ RING	48" AFF UON	ES-3.00
					4" SQ W/VERT SQ RING	48" AFF UON	ES-3.00
					4" SQ W/VERT SQ RING	48" AFF UON	ES-3.00

RADIO / PHONE					ELECTRICAL BOX	HEIGHT	DETAIL
				PHN – PHONE			
				PHN – PHONE, WIRELESS			

GENERAL ABBREVIATIONS

ABB	DESCRIPTION	ABB	DESCRIPTION
--A--		--L--	
AAB	ADDITIVE ALTERNATE BID	LA	LOCAL ALARM
ACS	ACCESS CONTROL SYSTEM	LK	LOCK
AACS	ALARM & ACCESS CONTROL SYSTEM	LOOP	INDUCTANCE LOOP
AFC	ABOVE FINISHED CEILING		
AFF	ABOVE FINISHED FLOOR		
AFG	ABOVE FINISHED GRADE	--M--	
		MAG	MAGNETIC
--B--		MATV	MASTER ANTENNA TV
		MAX	MAXIMUM
B/D	BELOW FINISHED CEILING	MIN	MINIMUM
BX	BOX	MORT	MORTISE
		MRK	MARKER
--C--		--N--	
CAB	CABLE	N	NORTH
CATV	COMMUNITY ANTENNA TV	NC	NORMALLY CLOSED
CAM	CAMERA	NEC	NATIONAL ELECTRICAL CODE
CBT	CABINET	NIC	NOT IN CONTRACT
CCT	CIRCUIT	NO	NORMALLY OPEN
CCTV	CLOSED CIRCUIT TV	NTS	NOT TO SCALE
CONDO	CONDUIT		
CON	CONNECTOR	--P--	
CONT	CONTINUED		
CYL	CYLINDRICAL	PCO	PENDING CHANGE ORDER
		PCS	PARKING CONTROL SYSTEM
--D--		PWS	POWER SUPPLY
DWG	DRAWING	--Q--	
--E--		--R--	
E	EAST	RCWY	RACEWAY
EC	ELECTRICAL CONTRACTOR	RES	RESISTOR
EL	ELEVATION	RF	RADIO FREQUENCY
ELEM	ELECTRICAL BOX	RFMOD	RF MODULATOR
ENC	ENCLOSURE	RLY	RELAY
EQ	EQUIPMENT		
EXT	EXTERNAL	--S--	
--F--		S	SOUTH
		SSC	SECURITY CONTRACTOR
FBGC	FURNISHED BY ELECTRICAL CONTRACTOR	SYM	SYMBOL
FBOC	FURNISHED BY GENERAL CONTRACTOR	SW	SWITCH
FBSC	FURNISHED BY SECURITY CONTRACTOR		
FBO	FURNISHED BY OTHER	--T--	
FC	FLEXIBLE CONDUIT		
FF	FITTING		
FLR	FLOOR	TYP	TYPICAL
FOV	FIELD OF VIEW	TV	TELEVISION
FT	FOOT OR FEET	TVC	TELEVISION CONTRACTOR
--G--		--U--	
GC	GENERAL CONTRACTOR	UNH	UNLESS OTHERWISE NOTED
GND	GROUND		
GUT	GUTTER	--V--	
--H--		VTS	VOLTS – VOLTAGE
HDG	HINGE	--W--	
HT	HEIGHT		
--I--		W	WEST
		W/	WITH
ID	IDENTIFICATION	W/O	WITHOUT
INC	INCANDESCENT	WP	WEATHER PROOF–PROTECTED
--J--		--XYZ--	
JB	JUNCTION BOX		
--K--			
KS	KEY SWITCH		

GENERAL SYMBOLS

SYMBOLS	DESCRIPTION
	PULLBOX SURFACE MOUNTED
	PULLBOX FLUSH MOUNTED
	EQ RACK SHORT RECESSED OR FLUSH MOUNTED
	EQ RACK SHORT SURFACE MOUNTED
	EQ RACK STANDING AND OR FULL–HEIGHT
	EQ RACK FRAME RELAY
	CONDUIT FLEXIBLE CONNECTION
	CONDUIT RUN IN CEILING, WALL OR SLAB
	CONDUIT RUN IN FLOOR, WALL OR SLAB
	CONDUIT HOMERUN TO INDICATED BOX, PANEL OR EQ RACK
	CONDUIT TURNED UP / TOWARDS
	CONDUIT TURNED DOWN / AWAY
	CONDUIT TERMINATED IN BUSHED CHASE NIPPLE
	LADDER–TYPE CABLE TRAY B/O
	HINGED WIREWAY OR DUCT, AS NOTED
	WIREWAY ABOVE AND/OR BELOW SECURITY EQUIPMENT
	NOTES: REFER TO NOTE SCHEDULE; REFER TO CONDUIT SIZE AND FILL SCHEDULE
	CONTINUATION OF LIKE–NUMBERED CIRCUIT OR CONDUCTOR
	CONNECTION OF LIKE–NUMBERED CIRCUIT OR CONDUCTOR
X	MATCHPOINT ON DRAWING MATCHES ANOTHER POINT BEARING SAME LETTER (X)
2 PCO	REVISION CLOUD X=REV NUMBER 2–D–DELETE A–ADD M–MOVE E–EXCHANGE
SE301	REFER TO DRAWING AND SHEET INDICATED
SE401	REFER TO ELEVATION DRAWING AND SHEET INDICATED
SE401	REFER TO SECTION DRAWING AND SHEET INDICATED

DRAWING INDEX

REV NUMBER/S	SHEET	DESCRIPTION
	SE100	TITLE INDEX SYMBOLS LEGENDS & GENERAL NOTES
	SE-302	ENLARGED SITE SECURITY PLAN
	SE-303	ENLARGED SITE SECURITY PLAN
	SE-304	ENLARGED SITE SECURITY PLAN
	SE401	EQUIPMENT ELEVATION, DOOR & CAMERA DETAIL

GENERAL NOTES

IF APPLICABLE SEE SPECIFICATIONS

THE FOLLOWING GENERAL NOTES ARE APPLICABLE AS STATED BELOW. EXCEPT WHERE SPECIFICALLY INDICATED OTHERWISE, ON THE DRAWINGS OR IN THE BID SPECIFICATION/S.

- CONDUIT AND STANDARD BACK BOXES AND PULL STRING FURNISHED AND INSTALLED BY EC
- SC SHALL WIRE TO "WIRED HINGE" AT ACCESS CONTROLLED DOOR. HINGE WIRE TO LOCK TERM BY DOOR HARDWARE CONTRACTOR
- 120 VAC 60HZ 20 AMP UON EXTENDED FROM NEAREST ELECTRICAL CIRCUITS SERVING THE SECURITY SYSTEM SHALL BE DEDICATED AND CONNECTED TO THE EMERGENCY POWER SYSTEM FURNISHED BY EC
- SPECIALTY BACK BOXES FURNISHED BY SC – ASSI AND INSTALLED BY EC
- WALL MOUNTED CARD READERS, PUSH BUTTONS, PANIC SW, KEYPADS AND KEY SWITCHES MOUNTED AT SAME HEIGHT AS LIGHT SWITCHES UON
- ALL CONDUIT SHALL BE 3/4" UON
- ALL CONDUIT SLITTERS BY EC
- ALL CORING PENETRATIONS AND FIRE STOP BY EC
- ALL HIGH–VOLTAGE BY EC
- EC TO INSTALL ALL CONDUIT AND BOXES PER NEC. PROVIDE PULL BOXES AT 100 – 150 FT INTERVALS
- VERIFY ALL WIRING TERMINATIONS PER MANUFACTURES GUIDELINES PRIOR TO POWER ON.
- PLENUM ENVIROMENT REQUIRES CONDUITS / STUBS TO ACCESSABLE CEILING AND OR AREA

* CAB TAG PLENUM

(X) XX
(X) XX
(X) XX
(X) XX
CABLE ID
CABLE QTY

* CAB TAG COND FILL

(X) X
(X) XXX
(X) XXX
(X) XXX
(X) XXX
CABLE ID
CABLE QTY
COND QTY
COND SIZE
1 = .75
2 = 1.0
3 = 1.25
4 = 1.5
5 = 2.0
6 = 2.5
7 = 3.0
8 = 4.0

CABLE / DUCT SCHEDULE

U S E	ID	*AREA	PART NO XF=FIBER	XC=CAT	XP=PVC	XR=RISER	MFG	DESCRIPTION	USAGE * SEE VTS DROP FOR POWER
		XD=DUCT							
V	A		BEL-(6300UE)				BELDEN	CABLE, PLENUM 22 – 2	ALARM INITIATING
V	B		BEL-(6502UE)				BELDEN	CABLE, PLENUM 22 – 4	ALARM INITIATING POWERED
V	C		BEL-(6304FE)				BELDEN	CABLE, PLENUM SHLD 22 – 6	RGB 6P
V	D		BEL-(6300UE)				BELDEN	CABLE, PLENUM 18 – 2	POWER *
I	E		BEL-(8430AB)				BELDEN	CABLE, PLENUM MOSI	VIDEO UP TO 1000 FT
I	F		BEL-(1583A0050U1000)				BELDEN	CABLE, PLENUM CAT–5E	NETWORK ETHERNET CABLE
V	G		BEL-(2413)				BELDEN	CABLE, PLENUM CAT–6	NETWORK ETHERNET CABLE

* CABLE AREA–DIAMETER DIVIDED BY 2, THEN TIMES ITSELF (SQUARED), THEN TIMES 3.14
** SIZE 11 AND 13 ARE AVAILABLE FOR DIRECT BURIAL

DOOR HANDING

* PWR CONVERSION

VA / VAC = AMP
AMP X VAC = VA
WATTS TO AMPS = WATTS / VOLTAGE
AMPS TO WATTS = VOLTS X AMPS
BTU = WATTS X 3.414

DEVICE ID

RDR.X.XXX
RTE.1
CT.
LK.
DOOR NUMBER
FLOOR NUMBER
DEVICE NAME (SEE DESCRIPTION)

No:	Revision:	Date:

No:	Revision:	Date:
1	-	2019-11-12
2	-	
3		

ASSI SECURITY, Inc.
1370 REYNOLDS AVE SUITE 201
IRVINE, CALIFORNIA 92614
949–833–0244
ALARM LICENSE LA 001226
C–7/10 LICENSE 653631
www.ASSISECURITY.COM

ASSI SECURITY SYSTEMS INTEGRATION PROFESSIONALS
Access Control * CCTV * Parking Control
Audio Mgmt. * Engineering * Sales & Service

Project Name:
SANTA ANA COLLEGE
Quad and Infrastructure Renovation
1530 West 17th Street
Santa Ana, CA 92706

Drawing Title:
TITLE INDEX
SYMBOLS LEGENDS & GENERAL NOTES

Date:	2016–05–13
Checked By:	DB
Drawn By:	LP
Job No.:	15083
Original Drawing Size:	42"x30"
Scale:	
Sheet No:	SE100

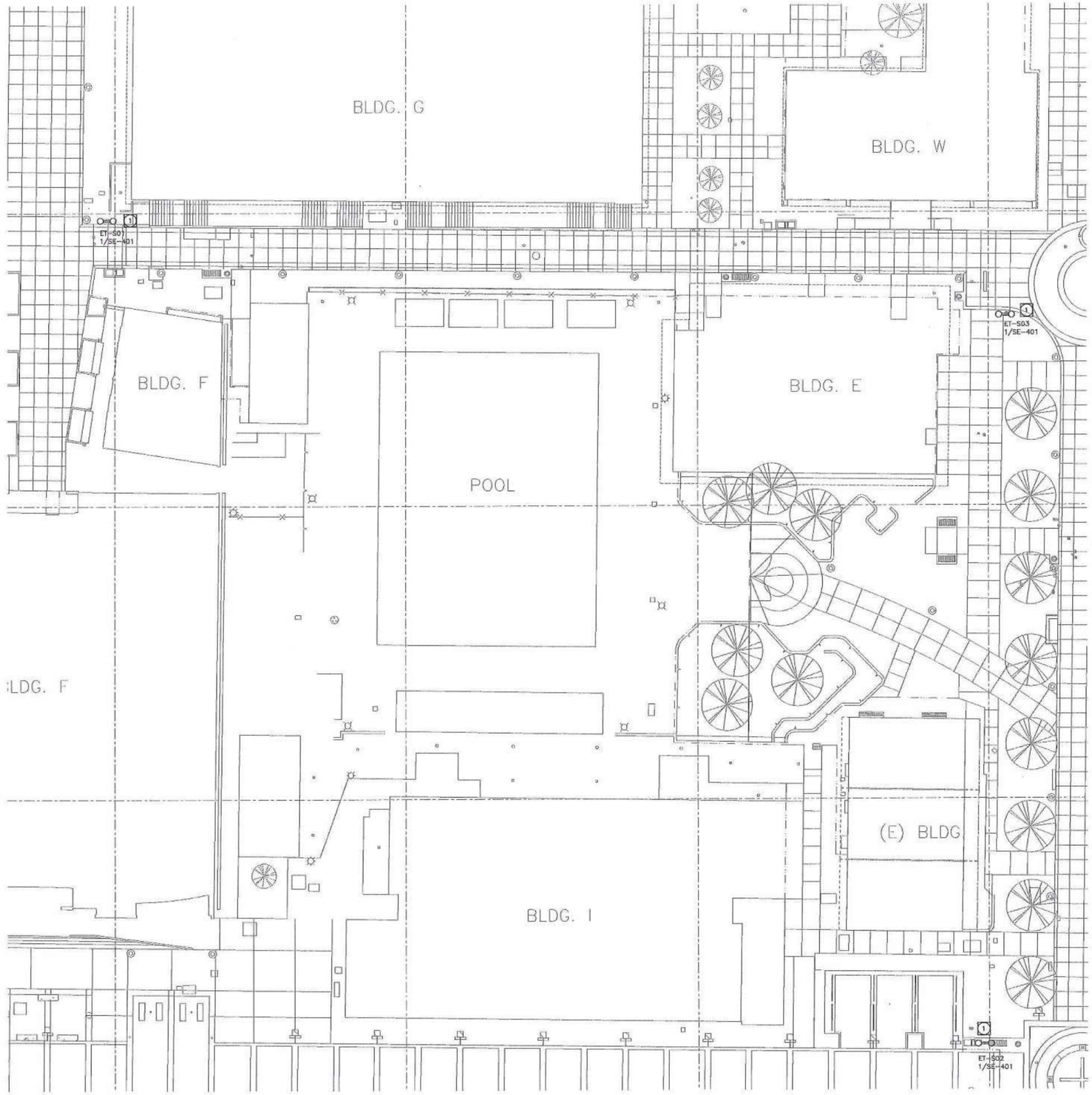

NOTE:

1. E.C. TO PORVIDE 4" CONDUIT TO TELEPHONE BACKBOARD.

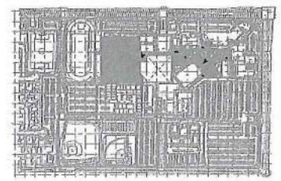

No:	Revision:	Date:

No:	Revision:	Date:

ASSI SECURITY, Inc.
1370 REYNOLDS AVE. SUITE 201
IRVINE, CALIFORNIA 92614
949-955-0244
ALARM LICENSE LA 001226
C-7/10 LICENSE 653031
www.ASSISECURITY.COM

ASSI SECURITY
SYSTEMS INTEGRATION PROFESSIONALS

Access Control • CCTV • Parking Control
Audio Mgmt. • Engineering • Sales & Service

Project Name:
SANTA ANA COLLEGE
Quad and Infrastructure Renovation
1530 West 17th Street
Santa Ana, CA 92706

Drawing Title:
ENLARGED SITE
SECURITY PLAN

Date:	2016-05-13
Checked By:	DB
Drawn By:	LP
Job No.:	16083
Original Drawing Size: 42"x30"	
Scale:	
Sheet No:	SE-302

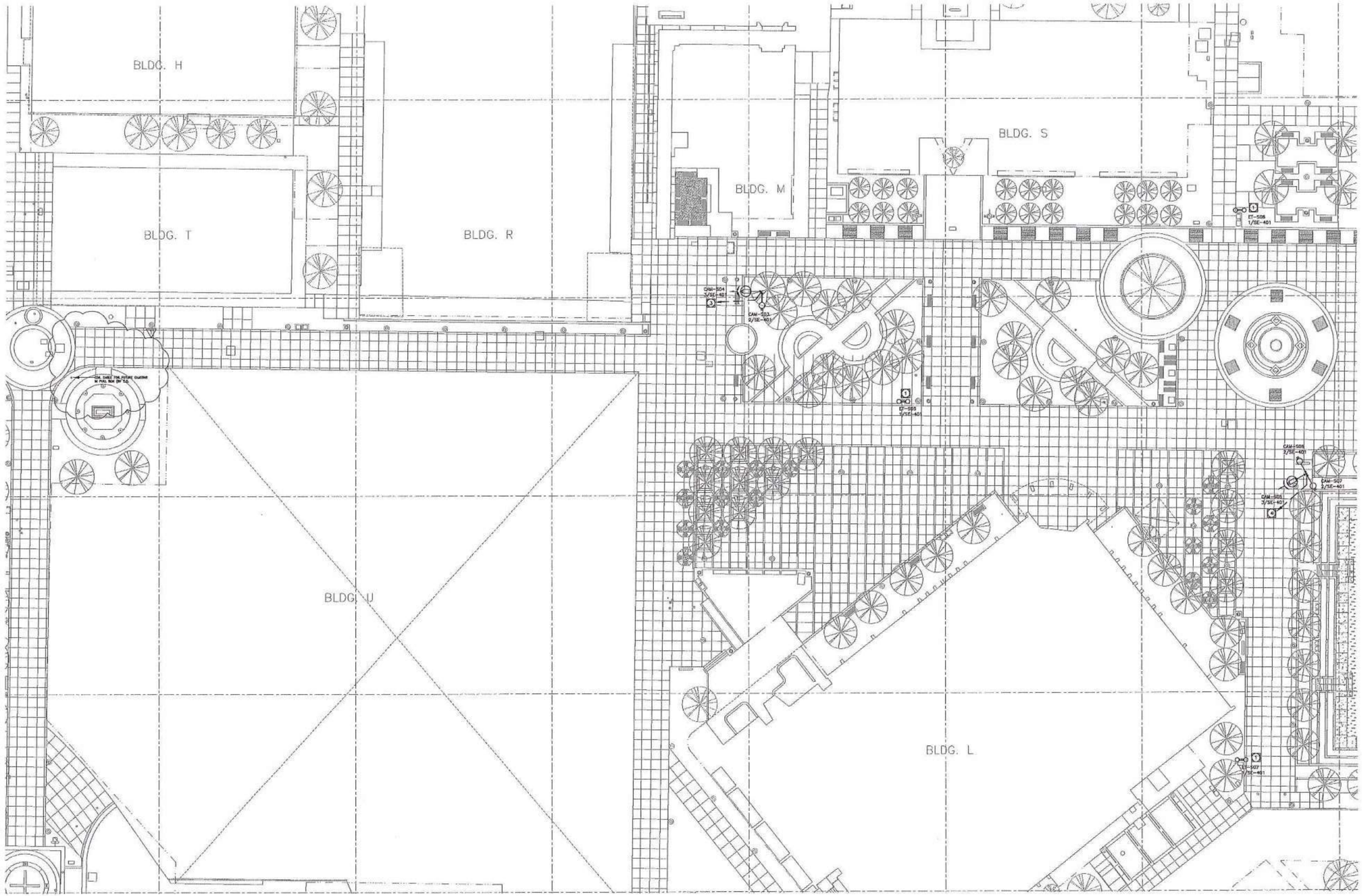

NOTES:

1. E.C. TO PORVIDE ¾" CONDUIT TO TELEPHONE BACKBOARD.
2. E.C. TO PORVIDE 1" CONDUIT TO IDF-T VIA PULLBOX.
3. E.C. TO PORVIDE 1" CONDUIT TO IDF-R VIA PULLBOX.
4. E.C. TO PORVIDE 1" CONDUIT TO IDF-L VIA PULLBOX.

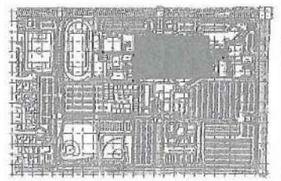

No:	Revision:	Date:
1	BULLETIN 020	2016-08-01

ASSI SECURITY, Inc.
1370 REYNOLDS AVE. SUITE 201
IRVINE, CALIFORNIA 92614
949-955-0244
ALARM LICENSE LA 001226
C-7/10 LICENSE 683831
WWW.ASSISECURITY.COM

ASSISECURITY
SYSTEMS INTEGRATION PROFESSIONALS
Access Control • CCTV • Parking Control
Audio Mgmt. • Engineering • Sales & Service

Project Name:
SANTA ANA COLLEGE
Quad and Infrastructure Renovation
1530 West 17th Street
Santa Ana, CA 92706

Drawing Title:
ENLARGED SITE
SECURITY PLAN

Date:	2016-05-13
Checked By:	DB
Drawn By:	LP
Job No.:	16083
Original Drawing Size: 42"x30"	
Scale:	
Sheet No:	SE-303

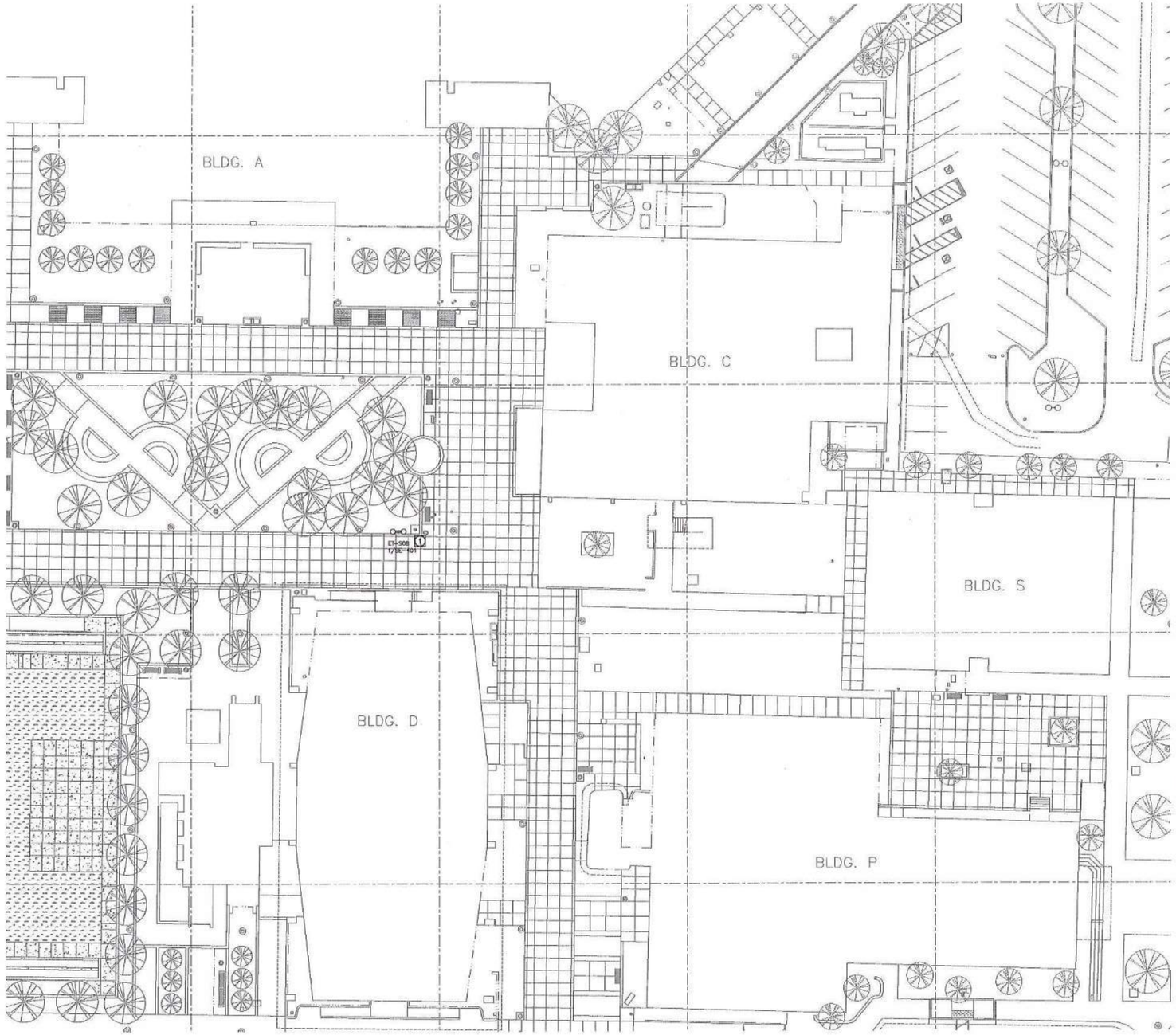

NOTE:

1 E.C. TO PORVIDE ¾" CONDUIT TO TELEPHONE BACKBOARD.

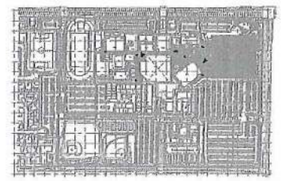

No:	Revision:	Date:

No:	Revision:	Date:

ASSI SECURITY, Inc.
1370 REYNOLDS AVE. SUITE 201
IRVINE, CALIFORNIA 92614
949-955-0244
ALARM LICENSE LA 001228
C-7/10 LICENSE 683831
WWW.ASSISECURITY.COM

ASSISECURITY
SYSTEMS INTEGRATION PROFESSIONALS
Access Control • CCTV • Parking Control
Audio Mgmt. • Engineering • Sales & Service

Project Name:
SANTA ANA COLLEGE
Quad and Infrastructure Renovation
1530 West 17th Street
Santa Ana, CA 92706

Drawing Title:
ENLARGED SITE
SECURITY PLAN

Date:	2016-05-13
Checked By:	DB
Drawn By:	LP
Job No.:	16083
Original Drawing Size: 42"x30"	
Scale:	
Sheet No:	SE-304

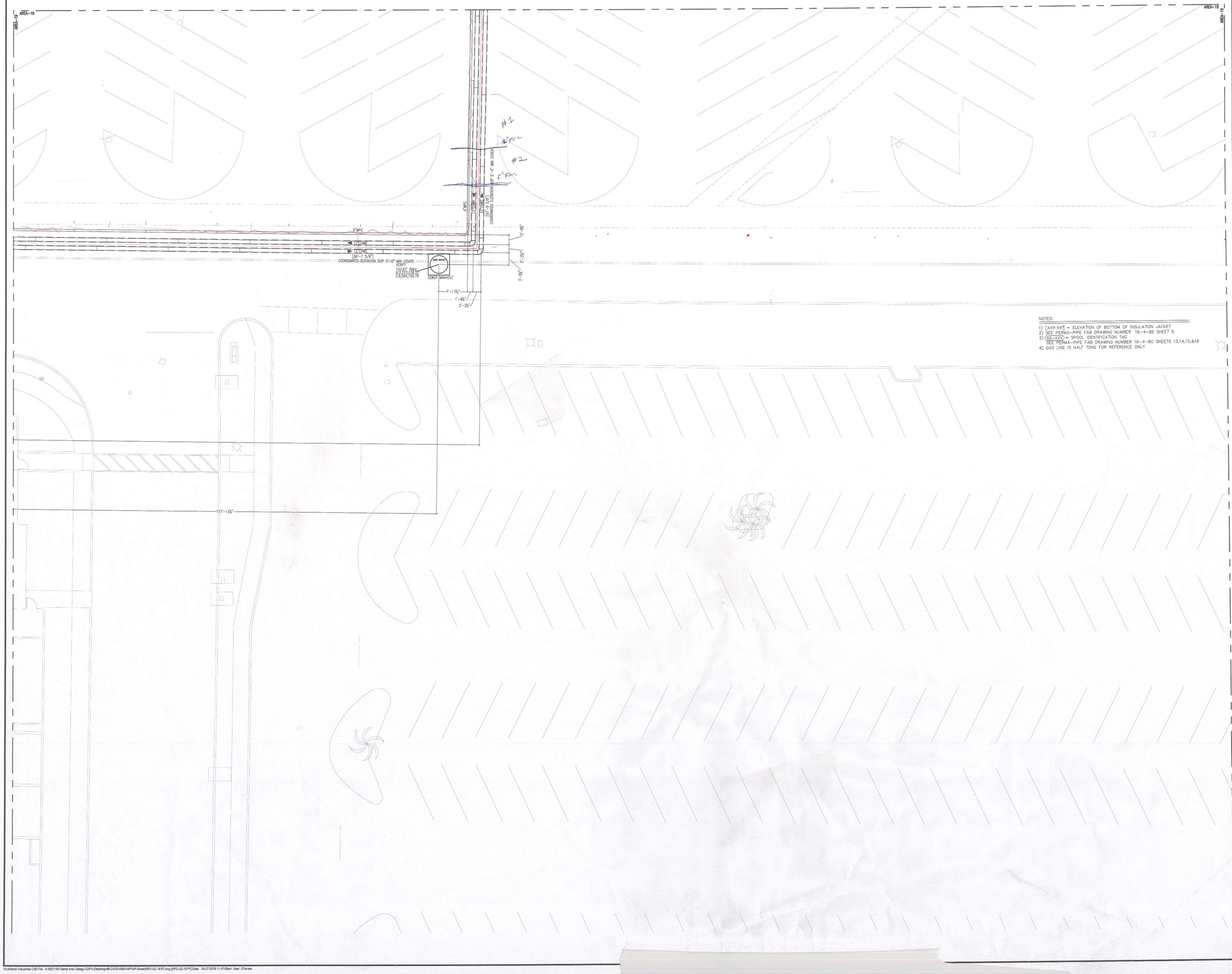

NOTES:

1) [XX'-XX'] = ELEVATION OF BOTTOM OF INSULATION JACKET
2) SEE PERMA-PIPE FAB DRAWING NUMBER 16-4-BE SHEET 5
3) (SS-XXX) = SPOOL IDENTIFICATION TAG
SEE PERMA-PIPE FAB DRAWING NUMBER 16-4-BC SHEETS 13,14,15,&16
4) GAS LINE IS HALF TONE FOR REFERENCE ONLY

IF THIS DRAWING IS NOT 48x36 IT HAS BEEN SCALED

Southland

7390 LINCOLN WAY
GARDEN GROVE CALIFORNIA
92841
714.901.5800
www.southlandind.com

FOR APPROVAL

03/29/2016

NO.	REVISION DESCRIPTION	DATE
B	RE-SUBMIT FOR APPROVAL	3/29/16
A	RE-SUBMIT FOR APPROVAL	3/10/16

DRAWN BY		DATE	02/17/2016
DESIGNED BY		SCALE	1/8" = 1'-0"
CHECKED BY		JOB NO.	5521193

KEY PLAN

N

JOB TITLE

SANTA ANA COLLEGE

1530 West 17th Street

Santa Ana, CA 92706

DRAWING TITLE

LEVEL UG : AREA 19
MECHANICAL PIPING
CHWS & R AND MPG

DRAWING NO.

MP2.UG.19.P2

Southland Industries CAD File: X:\5521193 Santa Ana College CUP\4-Detailing\4B-CADD\4B04-MP\MP-Sheet\MP2.UG.19.P2.dwg [MP2.UG.19.P1] Date: 04-27-2016 11:47:06am User: JTravers

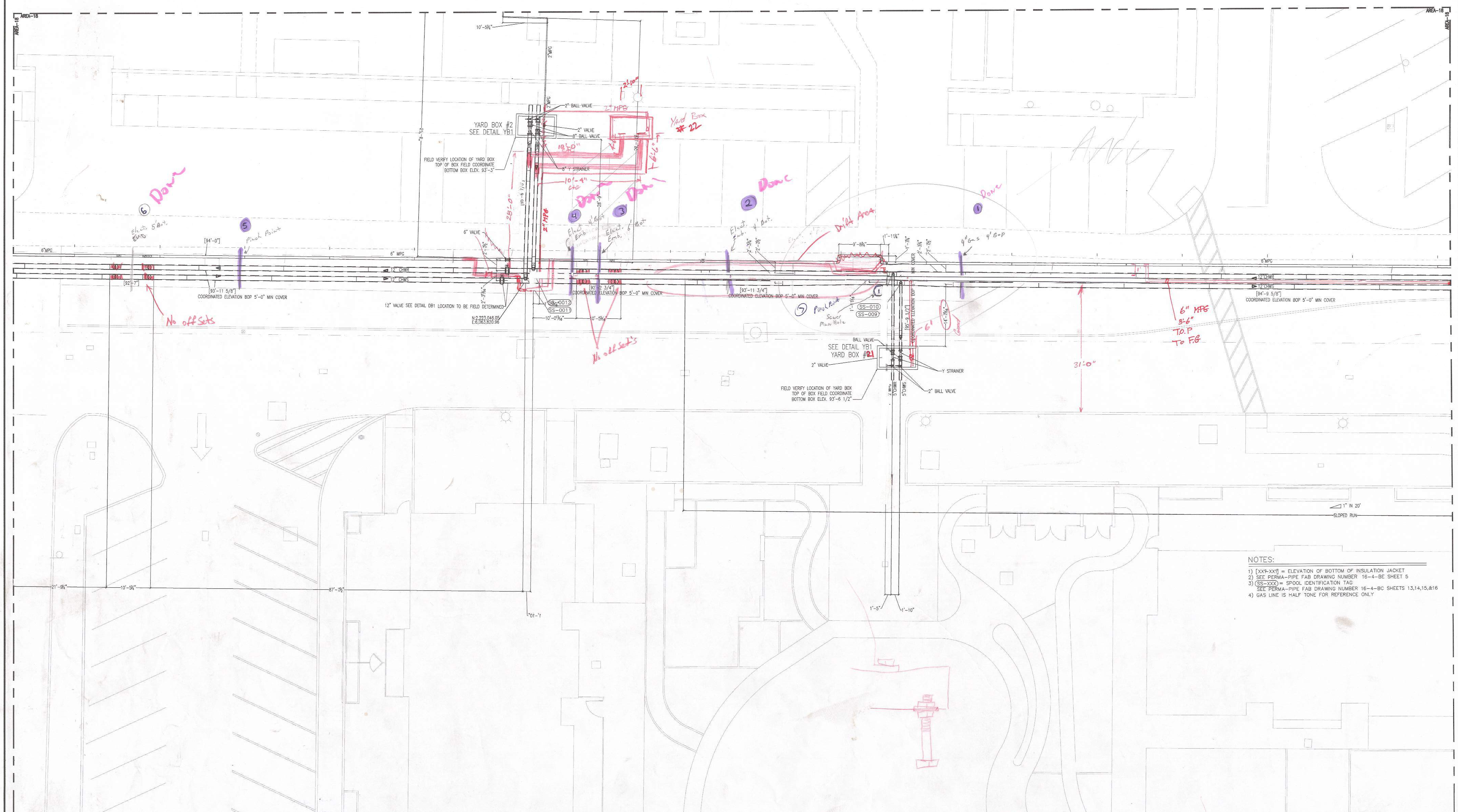

NOTES:

1) [XX?-XX?] = ELEVATION OF BOTTOM OF INSULATION JACKET
2) SEE PERMA-PIPE FAB DRAWING NUMBER 16-4-BE SHEET 5
3) (SS-XXX) = SPOOL IDENTIFICATION TAG
SEE PERMA-PIPE FAB DRAWING NUMBER 16-4-BC SHEETS 13,14,15,&16
4) GAS LINE IS HALF TONE FOR REFERENCE ONLY

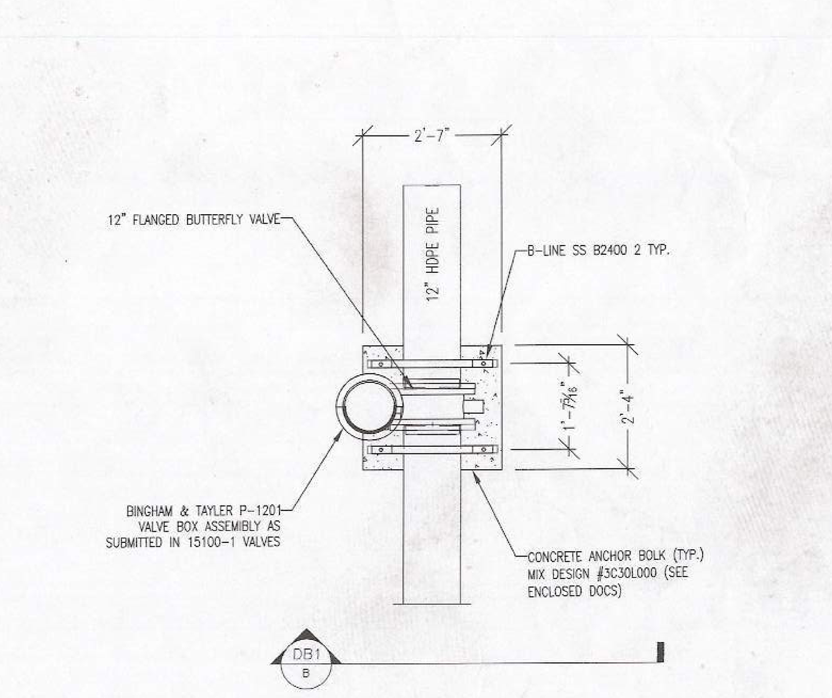

DB1 A ANCHOR FOR 12" BURIED VALVE
PLAN VIEW

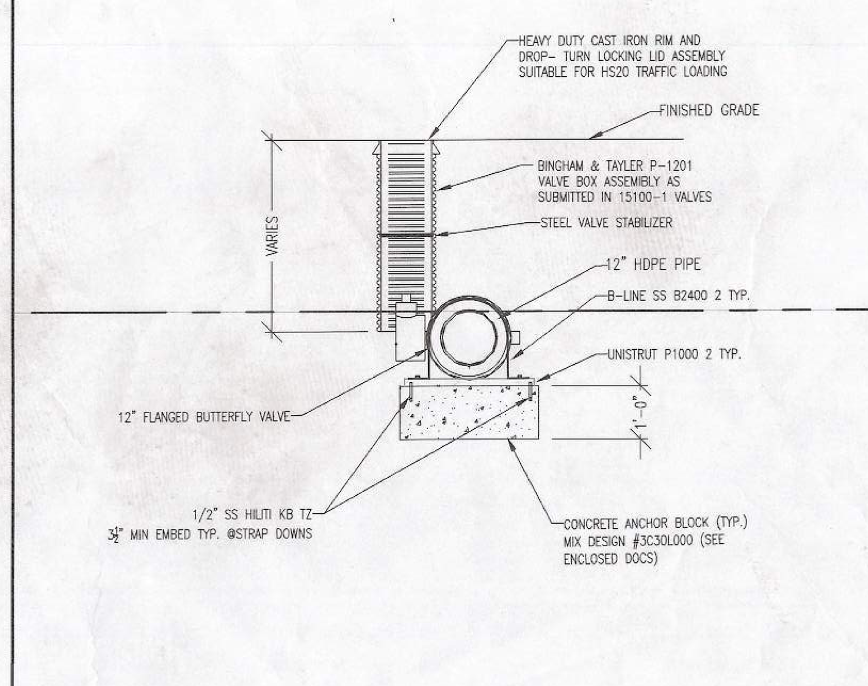

DB1 B ANCHOR FOR 12" BURIED VALVE
ELEV. VIEW

102x54x48 Yard Box						
Yard Box #	Bottom of Box	Top of Box	Number of 6" Rings needed	Base & Lid	A-ft	
2	93.25	101.67	10.00	3.912	8.42	
6	93.54	100.42	6.00	3.912	6.88	

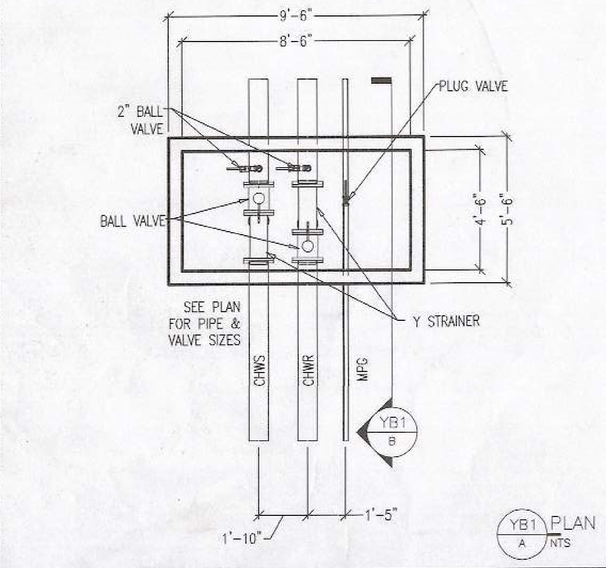

YB1 A PLAN NTS

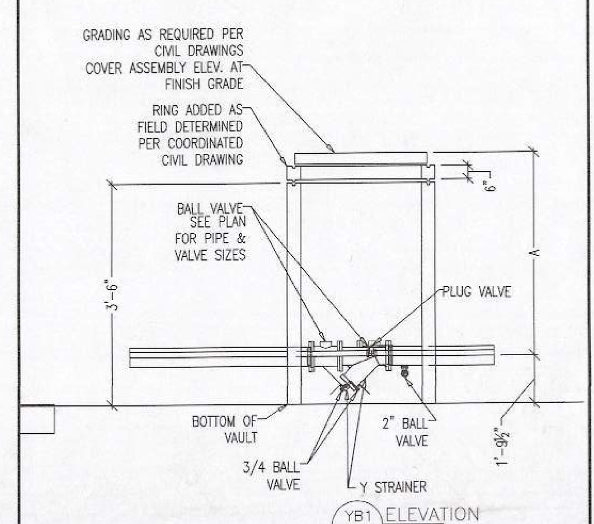

YB1 B ELEVATION NTS

Southland
7390 LINCOLN WAY
GARDEN GROVE CALIFORNIA
92841
714.901.5800
www.southlandind.com

FOR APPROVAL

03/30/2016

NO.	REVISION DESCRIPTION	DATE
B	RE-SUBMIT FOR APPROVAL	3/30/16
B	RE-SUBMIT FOR APPROVAL	3/17/16
A	RE-SUBMIT FOR APPROVAL	3/10/16

DRAWN BY		DATE	12/07/15
DESIGNED BY		SCALE	1/4" = 1'-0"
CHECKED BY		JOB NO.	5521193

KEY PLAN

JOB TITLE
SANTA ANA COLLEGE
1530 West 17th Street
Santa Ana, CA 92706

DRAWING TITLE
LEVEL UG : AREA 18
MECHANICAL PIPING
CHWS & R AND MPG

DRAWING NO.
MP2.UG.18.P2

36

Southland Industries CAD File: X:\5521193 Santa Ana College CUP\4-Detailing\4B-CADD\4B04-MP\MP-Sheet\MP2.UG.18.P2.dwg [MP2.UG.18.P1] Date: 04-27-2016 11:44:25am User: JTravers

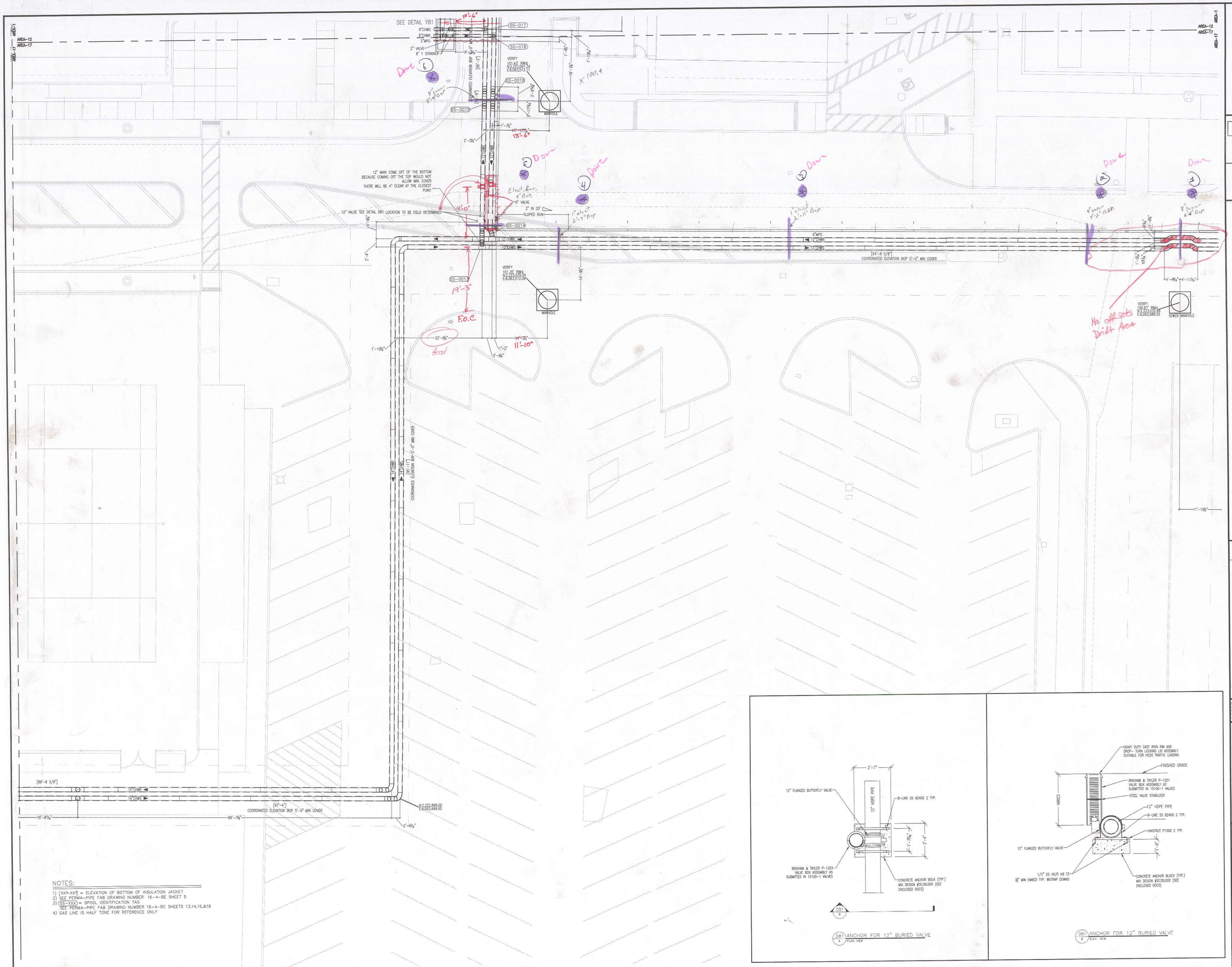

NOTES:

1) [XX'-XX"] = ELEVATION OF BOTTOM OF INSULATION JACKET
2) SEE PERMA-PIPE FAB DRAWING NUMBER 16-4-BE SHEET 5
3) (SS-XXX) = SPOOL IDENTIFICATION TAG
SEE PERMA-PIPE FAB DRAWING NUMBER 16-4-BC SHEETS 13,14,15,&16
4) GAS LINE IS HALF TONE FOR REFERENCE ONLY

Southland
7390 LINCOLN WAY
GARDEN GROVE CALIFORNIA
92841
714.901.5800
www.southlandind.com

FOR APPROVAL

04/12/2016

NO.	REVISION DESCRIPTION	DATE
C	RE-SUBMIT FOR APPROVAL	4/12/16
B	RE-SUBMIT FOR APPROVAL	3/29/16
A	RE-SUBMIT FOR APPROVAL	3/10/16

DRAWN BY	JT	DATE	02/11/2016
DESIGNED BY		SCALE	1/8" = 1'-0"
CHECKED BY		JOB NO.	5521193

KEY PLAN

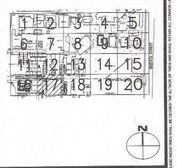

JOB TITLE

SANTA ANA COLLEGE

1530 West 17th Street

Santa Ana, CA 92706

DRAWING TITLE

LEVEL UG : AREA 16
MECHANICAL PIPING
CHWS & R AND MPG

DRAWING NO.

MP2.UG.17.P2

Southland Industries CAD File: X:\5521193 Santa Ana College CUP\4-Detailing\4B-CADD\4B04-MP\MP-Sheet\MP2.UG.17.P2.dwg [MP2.UG.17.P2] Date: 04-27-2016 11:41:59am User: JTravers

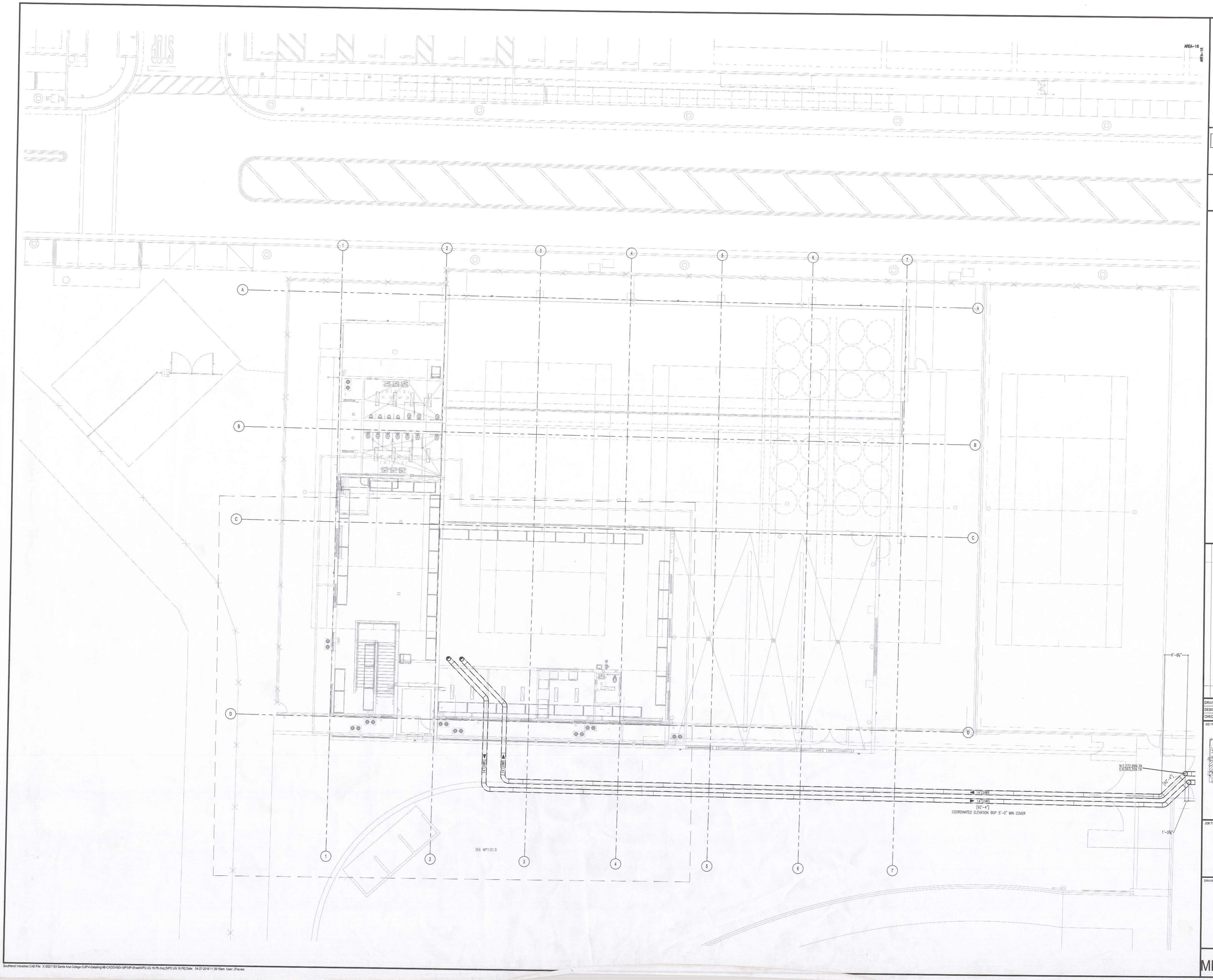

IF THIS DRAWING IS NOT 48x36 IT HAS BEEN SCALED

Southland

7390 LINCOLN WAY
GARDEN GROVE CALIFORNIA
92841
714.901.5800
www.southlandind.com

FOR APPROVAL

03/29/2016

NO.	REVISION DESCRIPTION	DATE

DRAWN BY	JT	DATE	02/11/2016
DESIGNED BY		SCALE	1/4" = 1'-0"
CHECKED BY		JOB NO.	5521193

KEY PLAN

JOB TITLE

SANTA ANA COLLEGE

1530 West 17th Street

Santa Ana, CA 92706

DRAWING TITLE

LEVEL UG : AREA 16
MECHANICAL PIPING
CHWS & R AND MPG

DRAWING NO.

MP2.UG.16.P6

Southland Industries CAD File: X:\5521193 Santa Ana College CUP\4-Detailing\4B-CADD\4B04-MP\MP-Sheet\MP2.UG.16.P6.dwg [MP2.UG.16.P6] Date: 04-27-2016 11:39:19am User: JTravers

IF THIS DRAWING IS NOT 48x36 IT HAS BEEN SCALED

NOTES:
1) [XX'-XX"] = ELEVATION OF BOTTOM OF INSULATION JACKET
2) SEE PERMA-PIPE FAB DRAWING NUMBER 16-4-BE SHEET 5
3) (SS-XXX) = SPOOL DENTIFICATION TAG
   SEE PERMA-PIPE FAB DRAWING NUMBER 16-4-BC SHEETS 13,14,15,&16
4) GAS LINE IS HALF TONE FOR REFERENCE ONLY

AREA-9
AREA-14

AREA-12

5'-1¼"
2'-2½"
1'-6¾"
VERIFY
105.20' RIM±
N: 2,223,360.67
E:6,054,167.17
SEWER MANHOLE

#4
5'-0" TOP
CHWS/R
6" MPS
4'-0" BOP

#1
Top 3'
Bot 3'-3"

#2
Top 6"
Bot 3'

#3
Top 3'-6"
Bot 3'-10"

DRAIN
LOCATION
(12" x 5.25")
CONCRETE ELEVATION SLOPE 0'-0" MIN. COVER

AREA-14

AREA-9
AREA-14
AREA-15

Southland Industries CAD File: X:\5521193 Santa Ana College CUP\4-Detailing\4B-CAD\04B04-MP\MP-Sheet\MP2.UG.14.P1.dwg [MP2.UG.14.P1] Date: 04-27-2016 11:37:20am User: JTravers

Southland

7390 LINCOLN WAY
GARDEN GROVE CALIFORNIA
92841
714.901.5800
www.southlandind.com

FOR APPROVAL

03/29/2016

NO.	REVISION DESCRIPTION	DATE
A	RE-SUBMIT FOR APPROVAL	3/10/16
B	RE-SUBMIT FOR APPROVAL	3/29/16

DRAWN BY		DATE	02/26/2016
DESIGNED BY		SCALE	1/8" = 1'-0"
CHECKED BY		JOB NO.	5521193

KEY PLAN

JOB TITLE
SANTA ANA COLLEGE

1530 West 17th Street

Santa Ana, CA 92706

DRAWING TITLE
LEVEL UG : AREA 14
MECHANICAL PIPING
CHWS & R AND MPG

DRAWING NO.
MP2.UG.14.P1

THESE DRAWINGS AND SPECIFICATIONS ARE THE PROPERTY AND COPYRIGHTED WORK OF SOUTHLAND INDUSTRIES AND ARE NOT TO BE USED FOR ANY WORK OTHER THAN THE PROJECT FOR WHICH THEY HAVE BEEN PREPARED AND OWNED BY SOUTHLAND INDUSTRIES, WHETHER THE PROJECT IS EXECUTED OR NOT. ANY REPRODUCTION OF THESE DRAWINGS AND SPECIFICATIONS WITHOUT THE WRITTEN PERMISSION OF SOUTHLAND INDUSTRIES IS PROHIBITED. ANY VISUAL CONTACT WITH THESE DRAWINGS AND SPECIFICATIONS SHALL CONSTITUTE PRIMA FACIE EVIDENCE OF ACCEPTANCE OF THESE RESTRICTIONS.

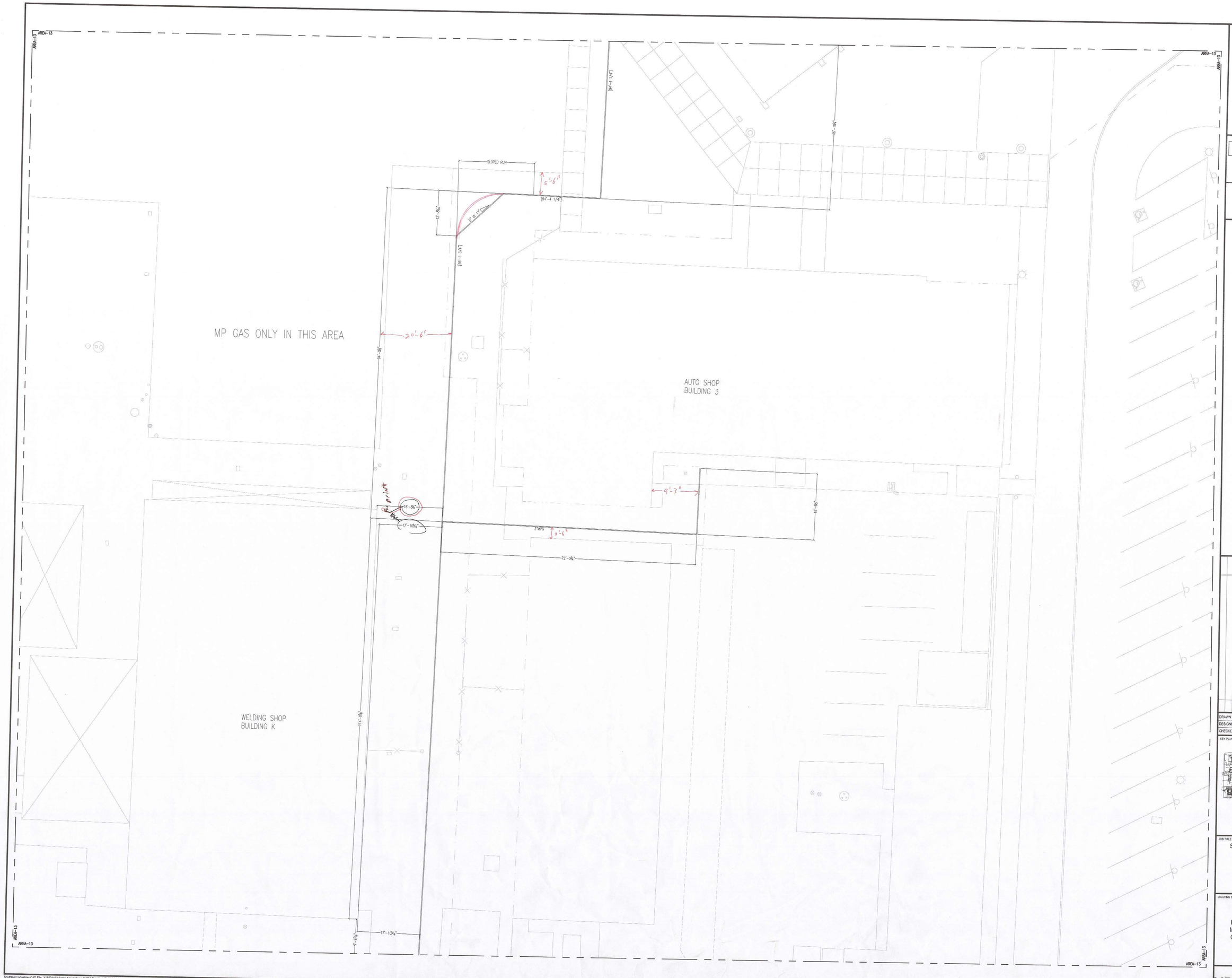

Southland Industries CAD File: X:\5521193 Santa Ana College CUP\4-Detailing\4B-CADD\4B04-MP\MP-Sheet\MP2.UG.13.P2.dwg [MP2.UG.13.P1] Date: 04-27-2016 11:33:56am User: JTravers

IF THIS DRAWING IS NOT 48x36 IT HAS BEEN SCALED

Southland

7390 LINCOLN WAY
GARDEN GROVE CALIFORNIA
92841
714.901.5800
www.southlandind.com

FOR APPROVAL

03/10/2016

NO.	REVISION DESCRIPTION	DATE
A	RE-SUBMIT FOR APPROVAL	3/10/16

DRAWN BY		DATE	12/07/15
DESIGNED BY		SCALE	1/4" = 1'-0"
CHECKED BY		JOB NO.	5521193

KEY PLAN

1	2	3	4	5
6	7	8	9	10
11	12	13	14	15
16	17	18	19	20

N

JOB TITLE

SANTA ANA COLLEGE

1530 West 17th Street

Santa Ana, CA 92706

DRAWING TITLE

LEVEL UG : AREA 13
MECHANICAL PIPING
CHWS & R AND MPG

DRAWING NO.

MP2.UG.13.P2

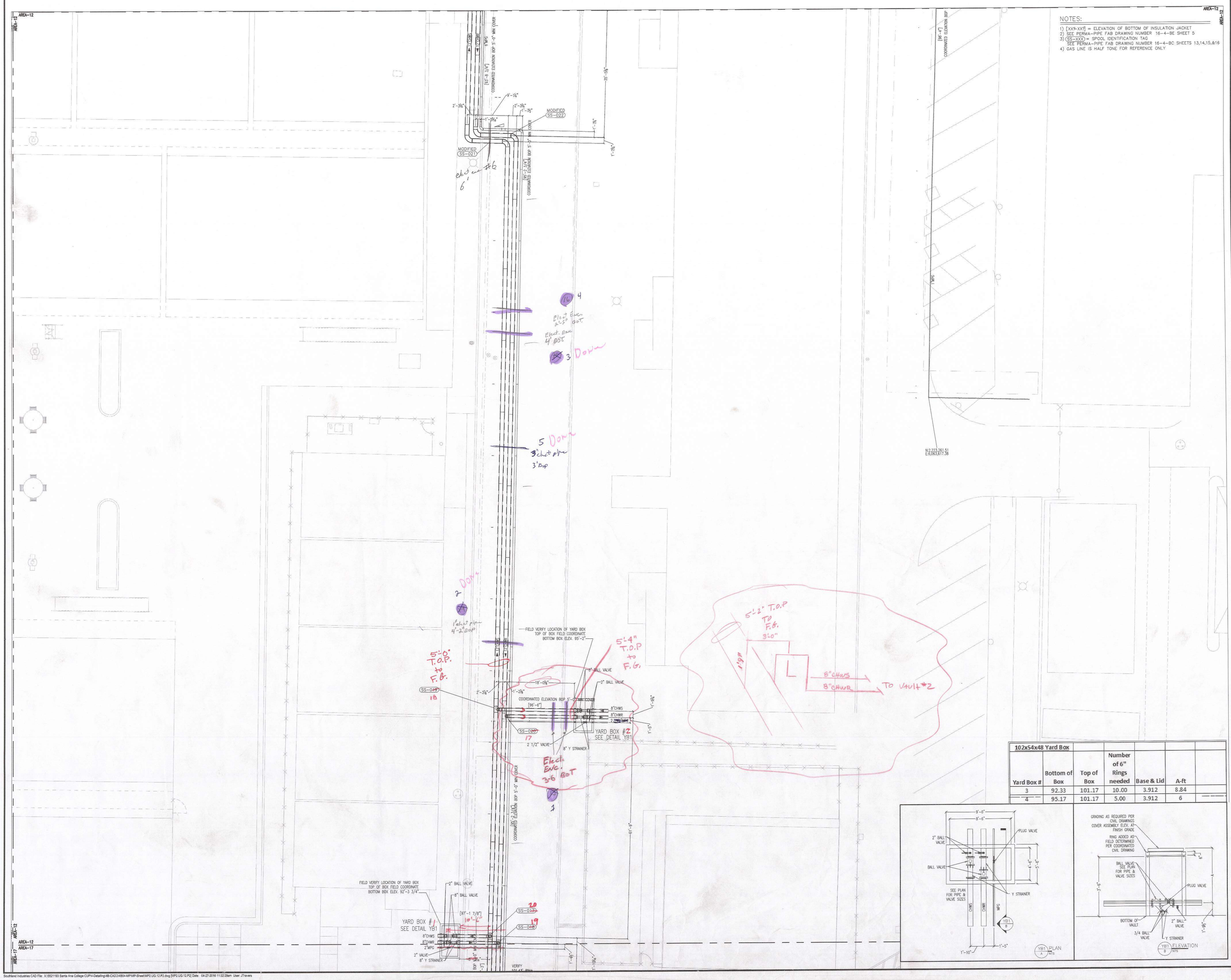

NOTES:

1) [XX'-XX'] = ELEVATION OF BOTTOM OF INSULATION JACKET
2) SEE PERMA-PIPE FAB DRAWING NUMBER 16-4-BE SHEET 5
3) (SS-XXX) = SPOOL IDENTIFICATION TAG
SEE PERMA-PIPE FAB DRAWING NUMBER 16-4-BC SHEETS 13,14,15,&16
4) GAS LINE IS HALF TONE FOR REFERENCE ONLY

102x54x48 Yard Box						
Yard Box #	Bottom of Box	Top of Box	Number of 6" Rings needed	Base & Lid	A-ft	
3	92.33	101.17	10.00	3.912	8.84	
4	95.17	101.17	5.00	3.912	6	

IF THIS DRAWING IS NOT 48-06-IT HAS BEEN SCALED

Southland

7390 LINCOLN WAY
GARDEN GROVE CALIFORNIA
92841
714.901.5800
www.southlandind.com

FOR APPROVAL

03/29/2016

NO.	REVISION DESCRIPTION	DATE
C	RE-SUBMIT FOR APPROVAL	3/29/16
B	RE-SUBMIT FOR APPROVAL	3/17/16
A	RE-SUBMIT FOR APPROVAL	3/10/16

DRAWN BY		DATE	02/26/2016
DESIGNED BY		SCALE	1/8" = 1'-0"
CHECKED BY		JOB NO.	5521193

KEY PLAN

JOB TITLE

SANTA ANA COLLEGE

1530 West 17th Street

Santa Ana, CA 92706

DRAWING TITLE

LEVEL UG : AREA 12
MECHANICAL PIPING
CHWS & R AND MPG

DRAWING NO.

MP2.UG.12.P2

Southland Industries CAD File: X:\5521193 Santa Ana College CUP\4-Detailing\4B-CADD\4B04-MP\MP-Sheet\MP2.UG.12.P2.dwg [MP2.UG.12.P2] Date: 04-27-2016 11:22:29am User: JTravers

IF THIS DRAWING IS NOT 48x36, IT HAS BEEN SCALED

NOTES:

1) [XX'-XX"] = ELEVATION OF BOTTOM OF INSULATION JACKET
2) SEE PERMA-PIPE FAB DRAWING NUMBER 16-4-BE SHEET 5
3) (SS-XXX) = SPOOL IDENTIFICATION TAG
   SEE PERMA-PIPE FAB DRAWING NUMBER 16-4-BC SHEETS 13,14,15,&16
4) GAS LINE IS HALF TONE FOR REFERENCE ONLY

AREA-10

YARD BOX #9
SEE DETAIL YB1

6" BALL VALVE
2" BALL VALVE
1" PLUG VALVE
Y STRAINER

BRANCHES COME OFF OF THE BOTTOM BECAUSE COMING OFF THE TOP WOULD NOT ALLOW MIN. COVER

FIELD VERIFY LOCATION OF YARD BOX
TOP OF BOX FIELD COORDINATE
BOTTOM BOX ELEV. 101'-1 1/4"

[102'-9 1/8"] COORDINATED ELEVATION BOP 5'-0" MIN COVER

[101'-2 3/4"] COORDINATED ELEVATION BOP 5'-0" MIN COVER

103.19' TOP±
N: 2,223,601.86
E: 6,064,504.86

[104'-3 3/4"]

89'-11 3/8"

61'-11"

21'-7 7/16"

37'-10 5/8"

TOP. TO F.G. 4'-6"

12" CHWS
12" CHWR
7'-1"
1'-2"
6" CHWS
6" CHWR
To Vault #17
16'-11"

6" VALVE
12" VALVE SEE DETAIL DB1 LOCATION TO BE FIELD DETERMINED
Valves Moved To Lot #6

No offset

N: 2,223,437.58
E: 6,064,381.22

STOP

AREA-10
AREA-15

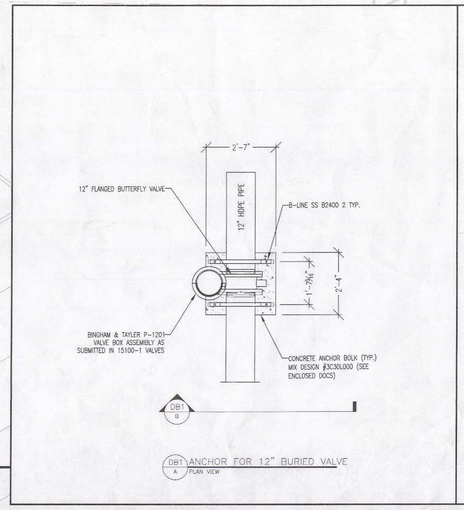

DB1 A ANCHOR FOR 12" BURIED VALVE
PLAN VIEW

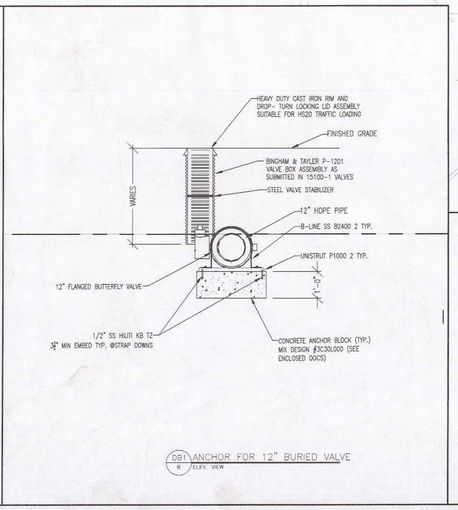

DB1 B ANCHOR FOR 12" BURIED VALVE
ELEV. VIEW

102x54x48 Yard Box						
Yard Box #	Bottom of Box	Top of Box	Number of 6" Rings needed	Base & Lid	A-ft	
9	101.08	106.08	3.00	3.912	5	

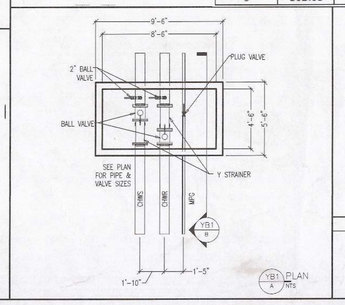

YB1 A PLAN
NTS

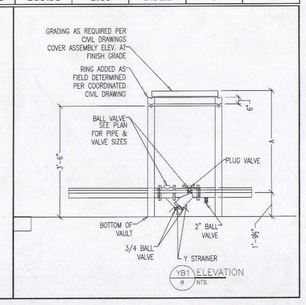

YB1 B ELEVATION
NTS

Southland

7390 LINCOLN WAY
GARDEN GROVE CALIFORNIA
92841
714.901.5800
www.southlandind.com

FOR APPROVAL

04/12/2016

NO.	REVISION DESCRIPTION	DATE
A	RE-SUBMIT FOR APPROVAL	3/7/16
B	RE-SUBMIT FOR APPROVAL	3/21/16
C	RE-SUBMIT FOR APPROVAL	3/30/16
D	RE-SUBMIT FOR APPROVAL	4/12/16

DRAWN BY		DATE	03/02/2016
DESIGNED BY		SCALE	1/8" = 1'-0"
CHECKED BY		JOB NO.	5521193

KEY PLAN

JOB TITLE

SANTA ANA COLLEGE

1530 West 17th Street

Santa Ana, CA 92706

DRAWING TITLE

LEVEL UG : AREA 10
MECHANICAL PIPING
CHWS & R AND MPG

DRAWING NO.

MP2.UG.10.P3

THE INFORMATION CONTAINED IN THIS DRAWING IS THE SOLE PROPERTY OF SOUTHLAND INDUSTRIES. ANY REPRODUCTION IN PART OR AS A WHOLE WITHOUT THE WRITTEN PERMISSION OF SOUTHLAND INDUSTRIES IS PROHIBITED.

YB1 PLAN
A NTS

YB1 ELEVATION
B NTS

102x54x48 Yard Box					
Yard Box #	Bottom of Box	Top of Box	Number of 6" Rings needed	Base & Lid	A-ft
1	98.39	103.7	3.00	3.912	5.31

DB1 ANCHOR FOR 12" BURIED VALVE
A PLAN VIEW

DB1 ANCHOR FOR 12" BURIED VALVE
B ELEV. VIEW

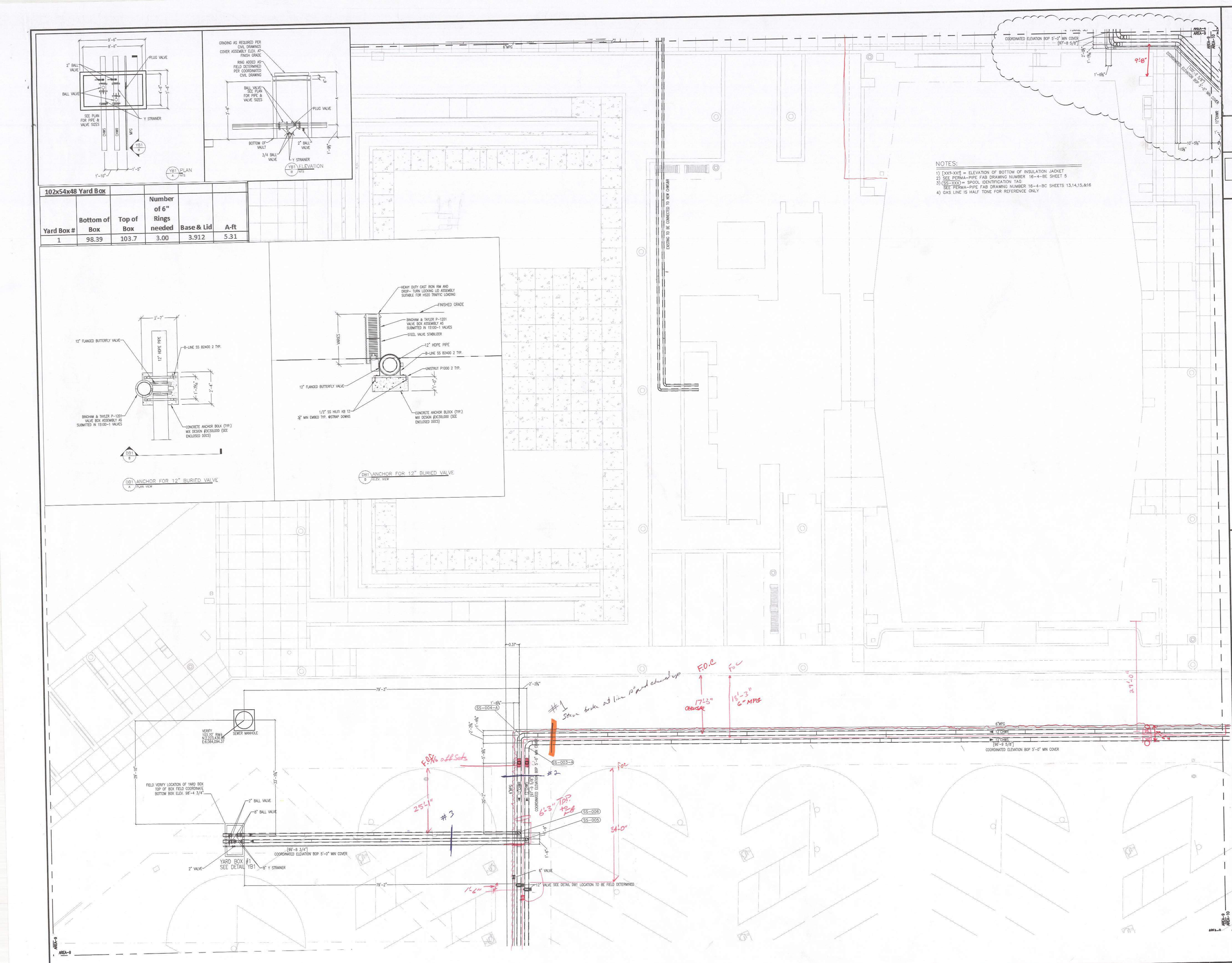

Southland

7390 LINCOLN WAY
GARDEN GROVE CALIFORNIA
92841
714.901.5800
www.southlandind.com

ISSUED FOR CONSTRUCTION

04/19/2016

NO.	REVISION DESCRIPTION	DATE

DRAWN BY		DATE	02/22/2016
DESIGNED BY		SCALE	1/8" = 1'-0"
CHECKED BY		JOB NO.	5521193

KEY PLAN

JOB TITLE

SANTA ANA COLLEGE

1530 West 17th Street

Santa Ana, CA 92706

DRAWING TITLE

LEVEL UG : AREA 9
MECHANICAL PIPING
CHWS & R AND MPG

DRAWING NO.

MP2.UG.9.P1

IF THIS DRAWING IS NOT ARCH E1 HAS BEEN SCALED

THESE PLANS AND SPECIFICATIONS ARE THE PROPERTY OF SOUTHLAND INDUSTRIES AND ARE NOT TO BE USED IN WHOLE OR IN PART FOR ANY OTHER PROJECT WITHOUT THE WRITTEN AUTHORIZATION OF SOUTHLAND INDUSTRIES. VISUAL CONTACT WITH THESE PLANS AND SPECIFICATIONS SHALL CONSTITUTE PRIMA FACIE EVIDENCE OF ACCEPTANCE OF THESE RESTRICTIONS.

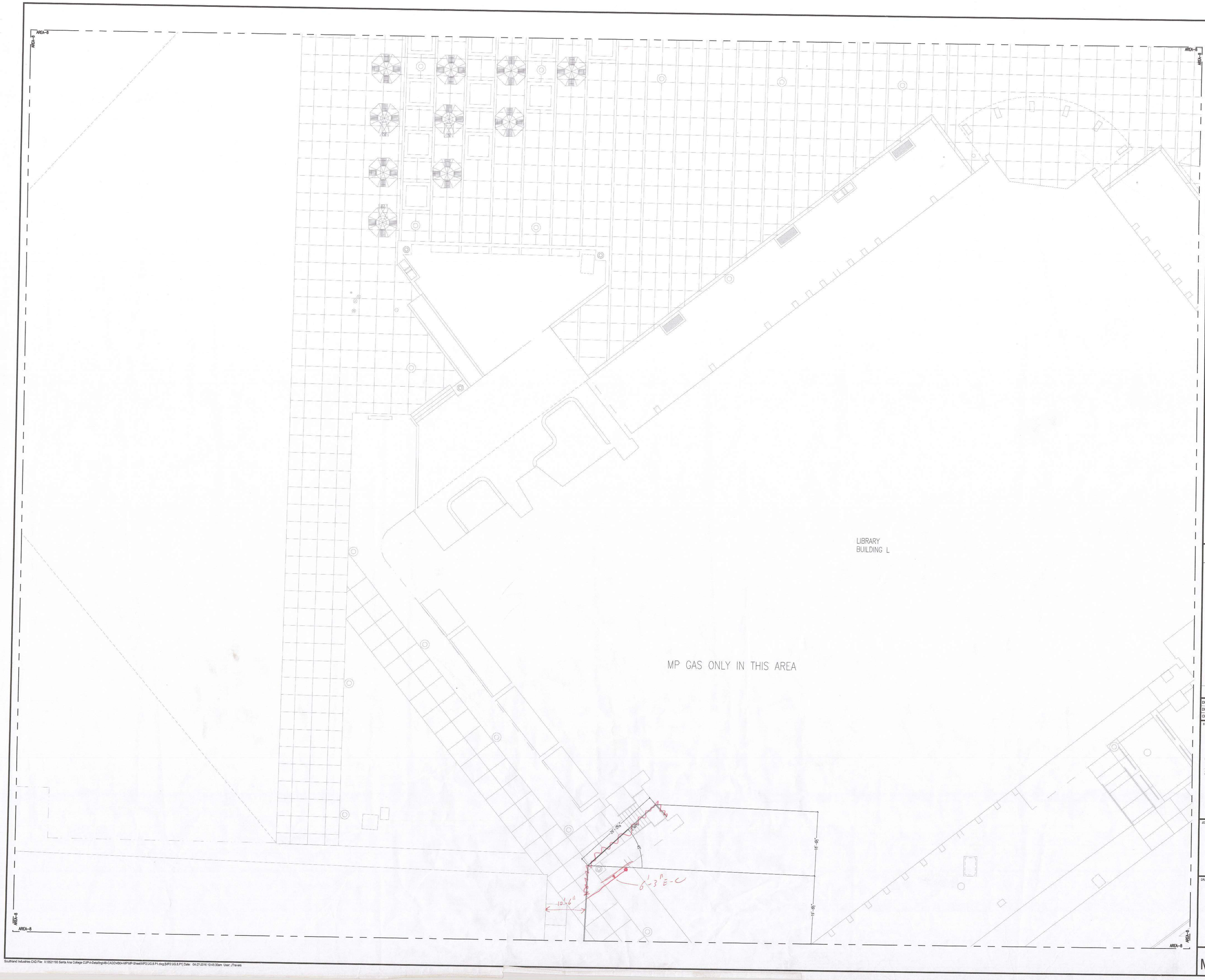

IF THIS DRAWING IS NOT 48x36 IT HAS BEEN SCALED

Southland

7390 LINCOLN WAY
GARDEN GROVE CALIFORNIA
92841
714.901.5800
www.southlandind.com

FOR APPROVAL

03/10/2016

NO.	REVISION DESCRIPTION	DATE
A	RE-SUBMIT FOR APPROVAL	3/10/16

DRAWN BY		DATE	12/07/15
DESIGNED BY		SCALE	1/8" = 1'-0"
CHECKED BY		JOB NO.	5521193

KEY PLAN

JOB TITLE

SANTA ANA COLLEGE

1530 West 17th Street

Santa Ana, CA 92706

DRAWING TITLE

LEVEL UG : AREA 8
MECHANICAL PIPING
CHWS & R AND MPG

DRAWING NO.

MP2.UG.8.P1

Southland Industries CAD File: X:\5521193 Santa Ana College CUP\4-Detailing\4B-CADD\4B04-MP\MP-Sheet\MP2.UG.8.P1.dwg [MP2.UG.8.P1] Date: 04-27-2016 10:45:30am User: JTravers

IF THIS DRAWING IS NOT 48x36 IT HAS BEEN SCALED

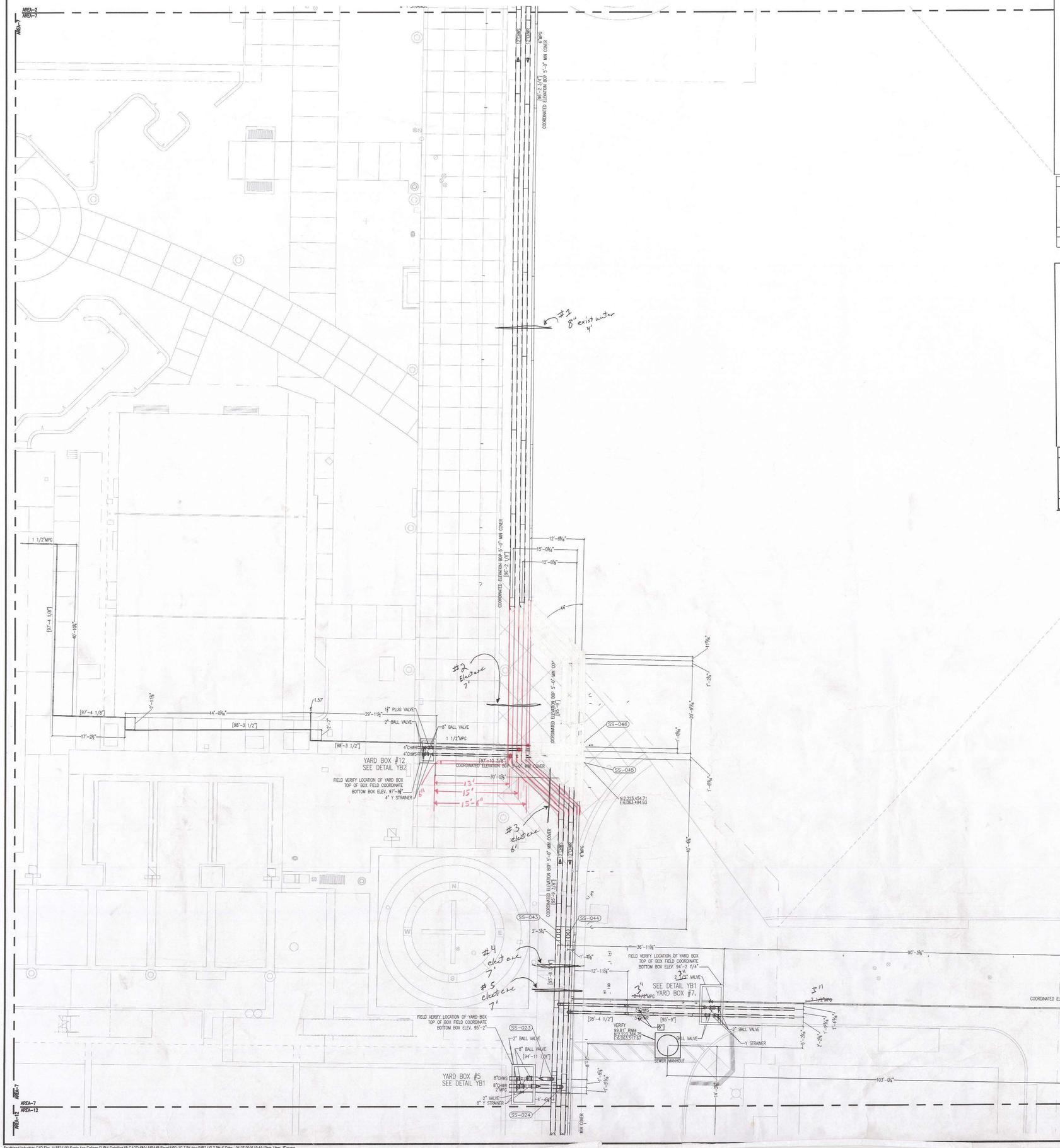

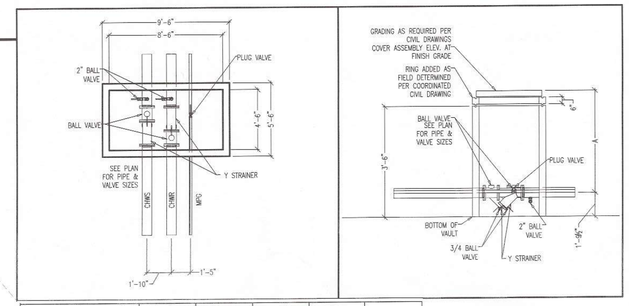

102x54x48 Yard Box						
Yard Box #	Bottom of Box	Top of Box	Number of 6" Rings needed	Base & Lid	A-ft	
5	93.65	99.833	5.00	3.912	6.183	
7	94.92	100.63	4.00	3.912	5.71	

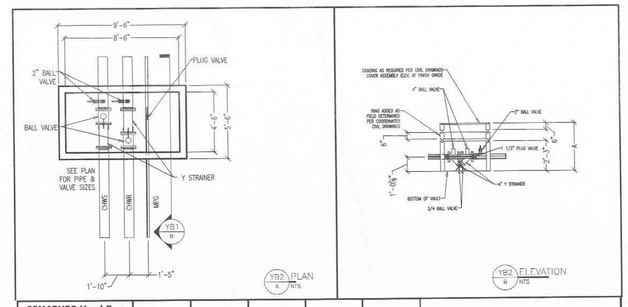

69X45X33 Yard Box						
Yard Box #	Bottom of Box	Top of Box	Number of 6" Rings needed	Base & Lid	A-ft	
12	97.25	101.92	4.00	2.75	4.67	

NOTES:

1) [XX9-XX9] = ELEVATION OF BOTTOM OF INSULATION JACKET
2) SEE PERMA-PIPE FAB DRAWING NUMBER 16-4-BE SHEET 5
3) (SS-XXX) = SPOOL IDENTIFICATION TAG
SEE PERMA-PIPE FAB DRAWING NUMBER 16-4-BC SHEETS 13,14,15,&16
4) GAS LINE IS HALF TONE FOR REFERENCE ONLY

Southland

7390 LINCOLN WAY
GARDEN GROVE CALIFORNIA
92841
714.901.5800
www.southlandind.com

FOR APPROVAL

04/08/2016

NO.	DESCRIPTION	DATE
C	SUBMIT FOR APPROVAL PHASE 4	4/8/16
B	RE-SUBMIT FOR APPROVAL	3/29/16
A	RE-SUBMIT FOR APPROVAL	3/10/16

DRAWN BY	JT	DATE	02/26/2016
DESIGNED BY		SCALE	1/8" = 1'-0"
CHECKED BY		JOB NO.	5521193

KEY PLAN

JOB TITLE

SANTA ANA COLLEGE

1530 West 17th Street

Santa Ana, CA 92706

DRAWING TITLE

LEVEL UG : AREA 7
MECHANICAL PIPING
CHWS & R AND MPG

DRAWING NO.

MP2.UG.7.P4

Southland Industries CAD File: X:\5521193 Santa Ana College CUP\4-Detailing\4B-CADD\4B04-MP\MP-Sheet\MP2.UG.7.P4.dwg [MP2.UG.7.P4-4] Date: 04-27-2015 10:44:13am User: JTravers

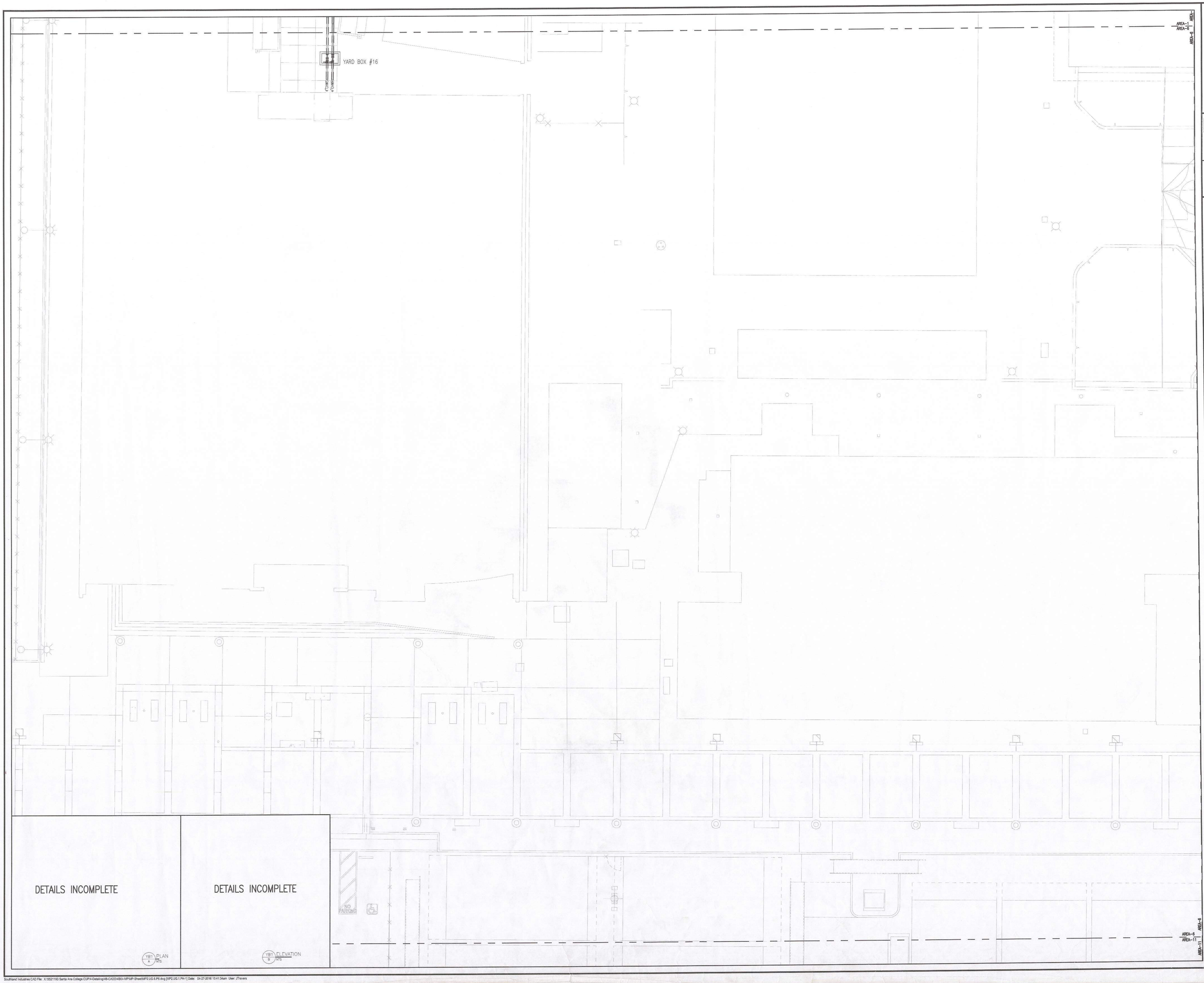

DETAILS INCOMPLETE

YB1 PLAN
A NTS

DETAILS INCOMPLETE

YB1 ELEVATION
B NTS

IF THIS DRAWING IS NOT 48x36 IT HAS BEEN SCALED

Southland

7390 LINCOLN WAY
GARDEN GROVE CALIFORNIA
92841
714.901.5800
www.southlandind.com

PROGRESS PRINT

NOT FOR CONSTRUCTION
3/21/2016
THIS DRAWING IS NOT A FINISHED PRODUCT AND IS IN THE PROCESS OF CHANGE.

NO.	REVISION DESCRIPTION	DATE

DRAWN BY	JT	DATE	02/11/2016
DESIGNED BY		SCALE	1/8" = 1'-0"
CHECKED BY		JOB NO.	5521193

KEY PLAN

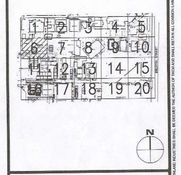

N

JOB TITLE
SANTA ANA COLLEGE

1530 West 17th Street

Santa Ana, CA 92706

DRAWING TITLE

LEVEL UG : AREA 6
MECHANICAL PIPING
CHWS & R AND MPG

DRAWING NO.
MP2.UG.6.P6

Southland Industries CAD File: X:\5521193 Santa Ana College CUP\4-Detailing\48-CADD\4804-MP\MP-Sheet\MP2.UG.6.P6.dwg [MP2.UG.1.PH-1] Date: 04-27-2016 10:41:34am User: JTravers

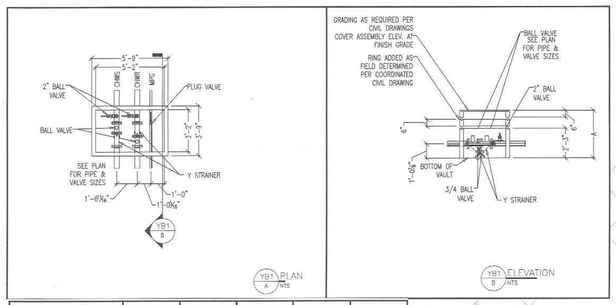

YB1 PLAN
A NTS

YB1 ELEVATION
B NTS

69X45X33 Yard Box						
Yard Box #	Bottom of Box	Top of Box	Number of 6" Rings needed	Base & Lid	A-ft	
10	100.375	105	4.00	2.75	4.625	

NOTES:

1) [XX9-XX9] = ELEVATION OF BOTTOM OF INSULATION JACKET
2) SEE PERMA-PIPE FAB DRAWING NUMBER **16-4-BE SHEET 5**
3) (SS-XXX) = SPOOL IDENTIFICATION TAG
SEE PERMA-PIPE FAB DRAWING NUMBER 16-4-BC SHEETS 13,14,15,&16
4) GAS LINE IS HALF TONE FOR REFERENCE ONLY

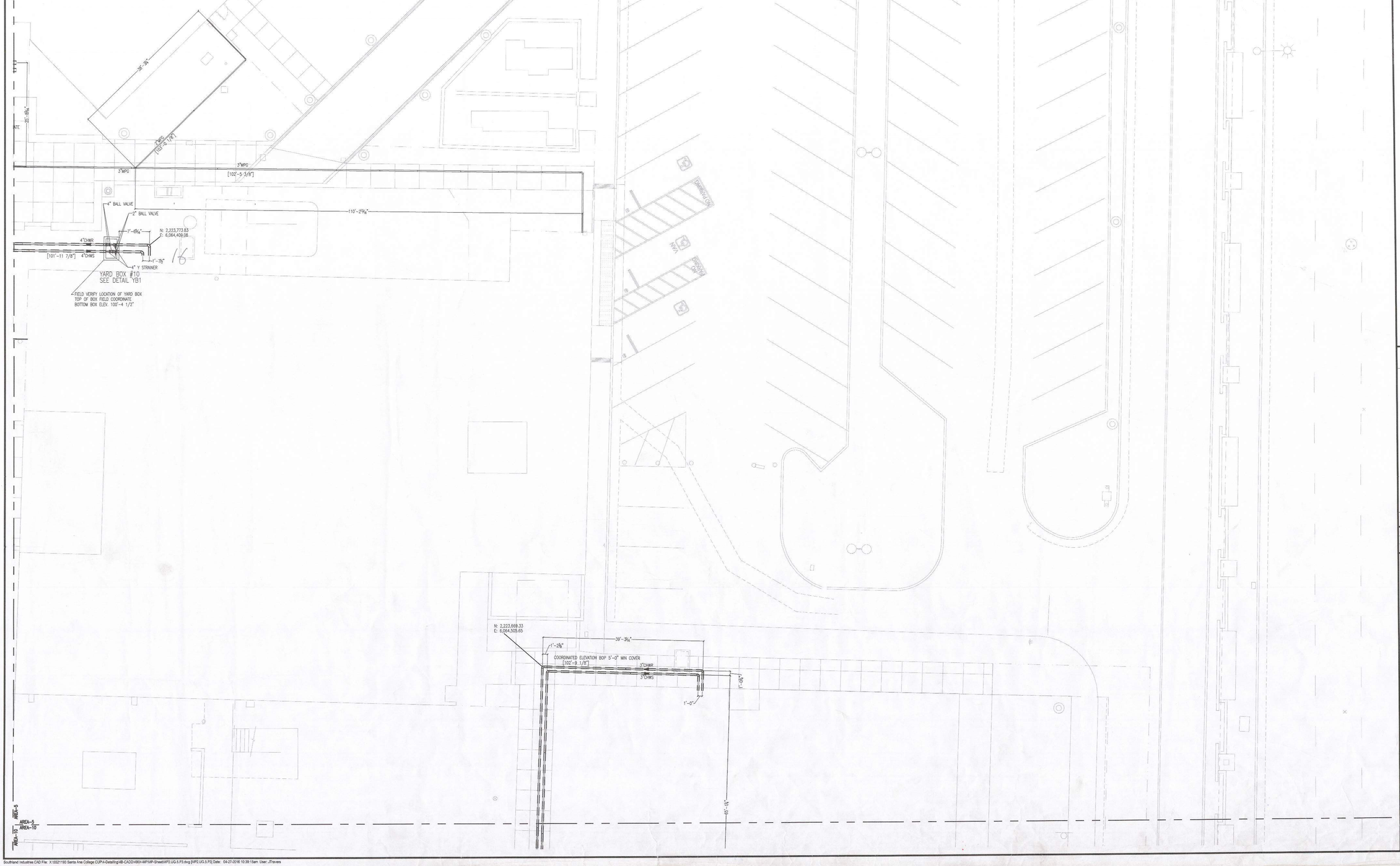

IF THIS DRAWING IS NOT 48x36 IT HAS BEEN SCALED

Southland

7390 LINCOLN WAY
GARDEN GROVE CALIFORNIA
92841
714.901.5800
www.southlandind.com

FOR APPROVAL

03/29/2016

NO.	REVISION DESCRIPTION	DATE
B	RE-SUBMIT FOR APPROVAL	3/29/16
A	RE-SUBMIT FOR APPROVAL	3/18/16

DRAWN BY	JT	DATE	03/02/2016
DESIGNED BY		SCALE	1/8" = 1'-0"
CHECKED BY		JOB NO.	5521193

KEY PLAN

N

JOB TITLE

SANTA ANA COLLEGE

1530 West 17th Street

Santa Ana, CA 92706

DRAWING TITLE

LEVEL UG : AREA .5
MECHANICAL PIPING
CHWS & R AND MPG

DRAWING NO.

MP2.UG.5.P3

Southland Industries CAD File: X:\5521193 Santa Ana College CUP\4-Detailing\4B-CADD\4804-MP\MP-Sheet\MP2.UG.5.P3.dwg [MP2.UG.5.P3] Date: 04-27-2016 10:39:15am User: JTravers

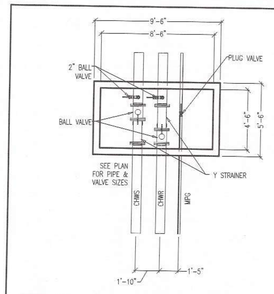

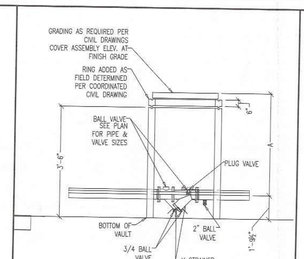

102x54x48 Yard Box						
Yard Box #	Bottom of Box	Top of Box	Number of 6" Rings needed	Base & Lid	A-ft	
8	98.75	106.08	7.00	3.912	7.33	
11	98.67	105	5.00	3.912	6.33	

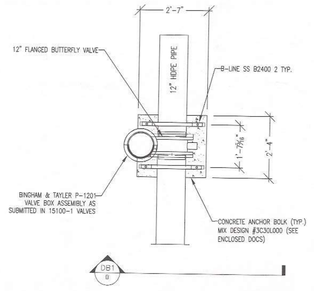

DB1 A — ANCHOR FOR 12" BURIED VALVE
PLAN VIEW

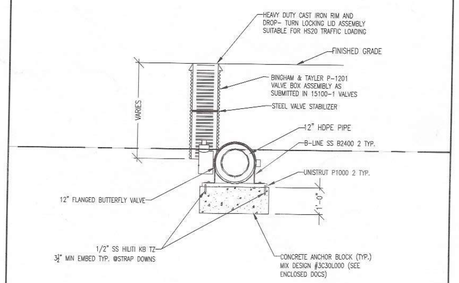

DB1 B — ANCHOR FOR 12" BURIED VALVE
ELEV. VIEW

NOTES:

1) [XX'-XX"] = ELEVATION OF BOTTOM OF INSULATION JACKET
2) SEE PERMA-PIPE FAB DRAWING NUMBER **16-4-BC SHEET 5**
3) (SS-XXX) = SPOOL IDENTIFICATION TAG
   SEE PERMA-PIPE FAB DRAWING NUMBER 16-4-BC SHEETS 13,14,15,&16
4) GAS LINE IS HALF TONE FOR REFERENCE ONLY

AREA-1

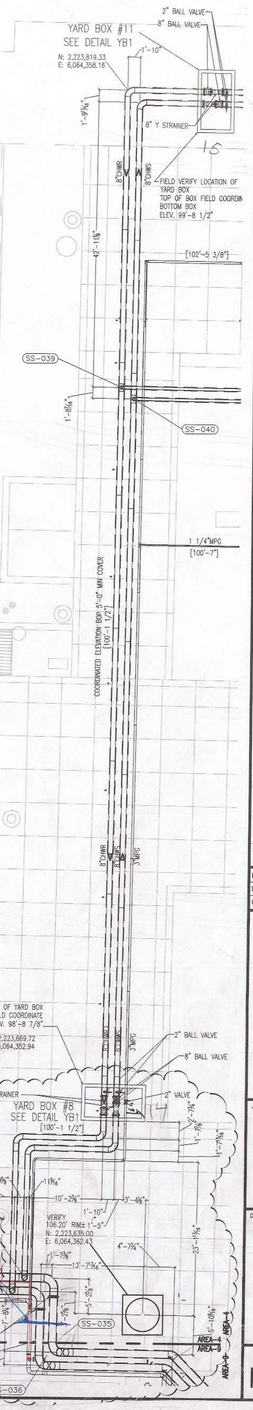

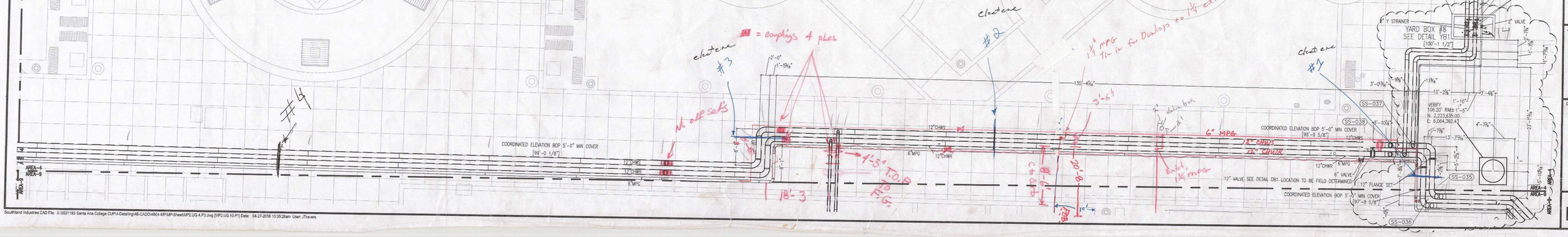

Southland Industries CAD File: X:\6521193 Santa Ana College CUP\4-Detailing\4B-CAD\04B04-MP\MP-Sheet\MP2.UG.4.P3.dwg [MP2.UG.10.P1] Date: 04-27-2016 10:35:28am User: JTravers

IF THIS DRAWING IS NOT 48x36 IT HAS BEEN SCALED

Southland
7390 LINCOLN WAY
GARDEN GROVE, CALIFORNIA
92841
714.901.5800
www.southlandind.com

ISSUED FOR CONSTRUCTION
04/19/2016

NO.	REVISION DESCRIPTION	DATE

DRAWN BY	JT	DATE	03/02/2016
DESIGNED BY		SCALE	1/8" = 1'-0"
CHECKED BY		JOB NO.	5521193

KEY PLAN

JOB TITLE
SANTA ANA COLLEGE
1530 West 17th Street
Santa Ana, CA 92706

DRAWING TITLE
LEVEL UG : AREA .4
MECHANICAL PIPING
CHWS & R AND MPG

DRAWING NO.
MP2.UG.4.P3

THE INFORMATION CONTAINED IN THIS DRAWING IS THE SOLE PROPERTY OF SOUTHLAND INDUSTRIES. ANY REPRODUCTION IN PART OR AS A WHOLE WITHOUT THE WRITTEN PERMISSION OF SOUTHLAND INDUSTRIES IS PROHIBITED. ANY USE OF THESE PLANS AND SPECIFICATIONS ON ANY PROJECT OTHER THAN THE ONE FOR WHICH THEY HAVE BEEN PREPARED SHALL BE AT THE USER'S SOLE RISK AND WITHOUT LIABILITY TO SOUTHLAND INDUSTRIES.

IF THIS DRAWING IS NOT 48x36 IT HAS BEEN SCALED

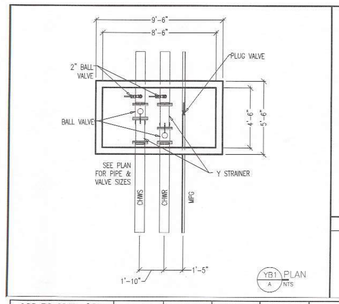

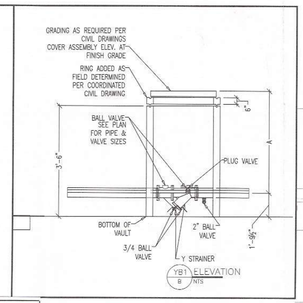

102x54x48 Yard Box						
Yard Box #	Bottom of Box	Top of Box	Number of 6" Rings needed	Base & Lid	A-ft	
18	97.58	104.19	6.00	3.912	6.61	

69X45X33 Yard Box						
Yard Box #	Bottom of Box	Top of Box	Number of 6" Rings needed	Base & Lid	A-ft	
19	99.67	104.2	4.00	2.75	4.53	
20	100.78	104.2	2.00	2.75	3.42	

NOTES:

1) (XX'-XX") = ELEVATION OF BOTTOM OF INSULATION JACKET
2) SEE PERMA-PIPE FAB DRAWING NUMBER 16-4-BE SHEET 5
3) (SS-XXX) = SPOOL IDENTIFICATION TAG
   SEE PERMA-PIPE FAB DRAWING NUMBER 16-4-BC SHEETS 13,14,15,&16
4) GAS LINE IS HALF TONE FOR REFERENCE ONLY

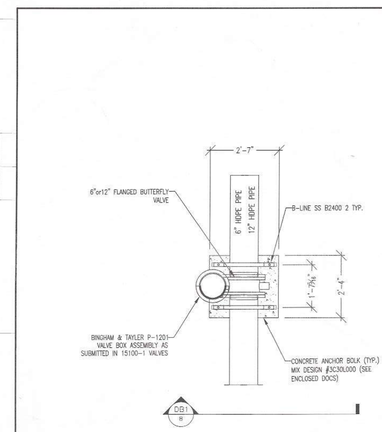

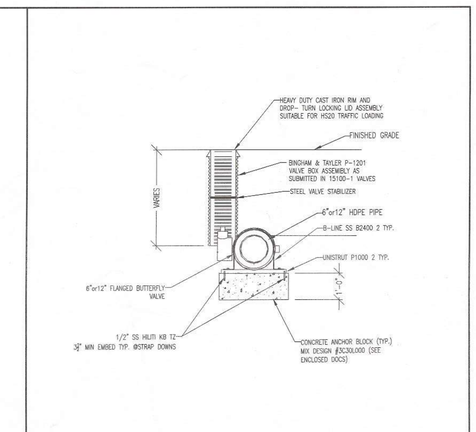

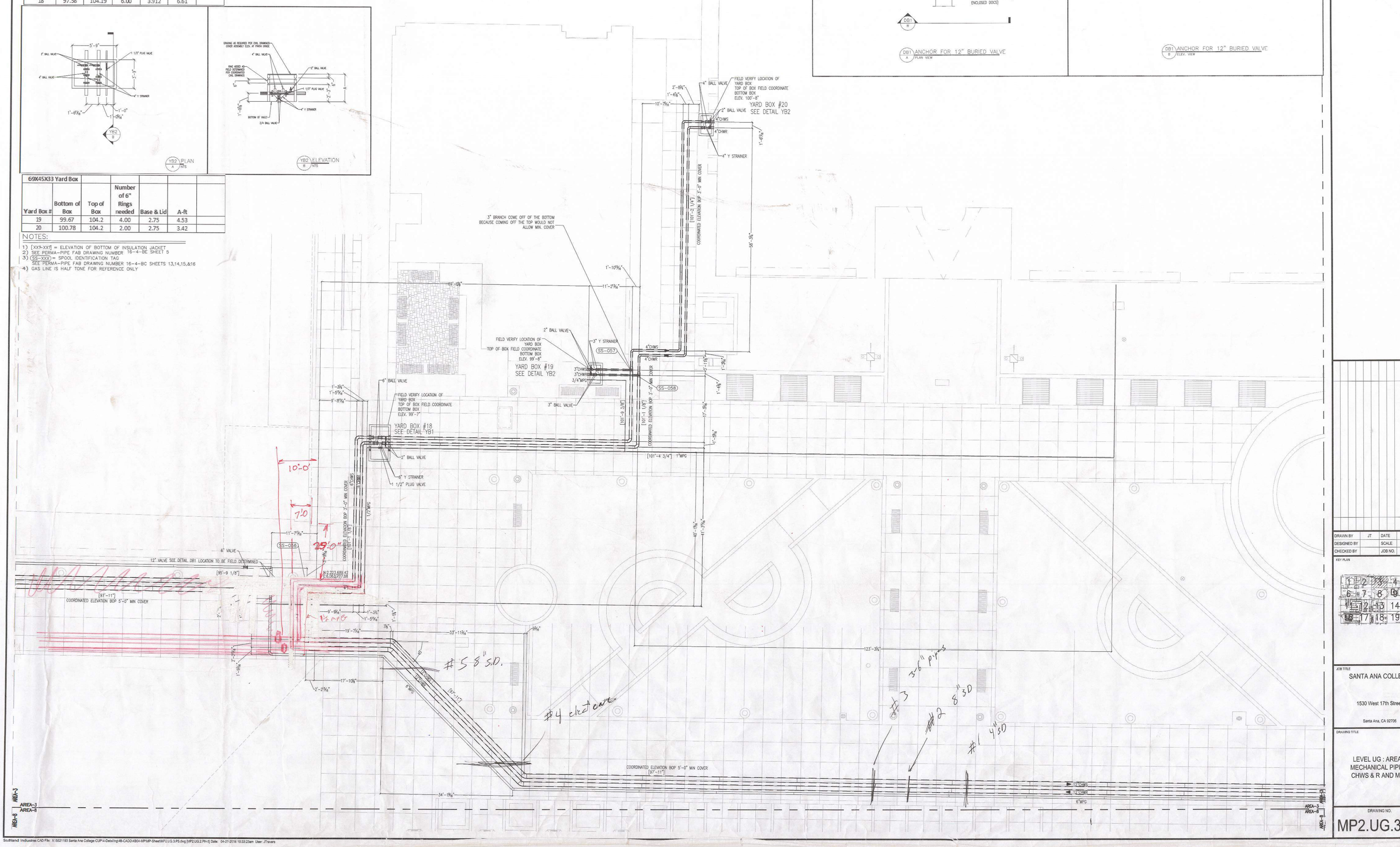

Southland.
7390 LINCOLN WAY
GARDEN GROVE CALIFORNIA
92841
714.901.5800
www.southlandind.com

NO.	REVISION DESCRIPTION	DATE

DRAWN BY	JT	DATE	02/11/2016
DESIGNED BY		SCALE	1/8" = 1'-0"
CHECKED BY		JOB NO.	5521193

KEY PLAN

JOB TITLE
SANTA ANA COLLEGE
1530 West 17th Street
Santa Ana, CA 92706

DRAWING TITLE
LEVEL UG : AREA 3
MECHANICAL PIPING
CHWS & R AND MPG

DRAWING NO.
MP2.UG.3.P5

Southland Industries CAD File: X:\5521193 Santa Ana College CUP\4-Detailing\4B-CADD\SB04-MP\MP-Sheet\MP2.UG.3.P5.dwg [MP2.UG.2.P4-5] Date: 04-27-2016 10:33:23am User: JTravers

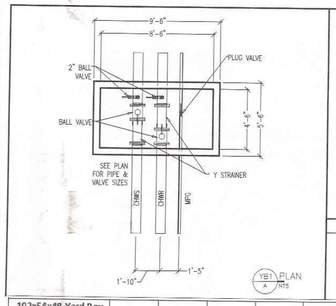

YB1 PLAN
A /NTS

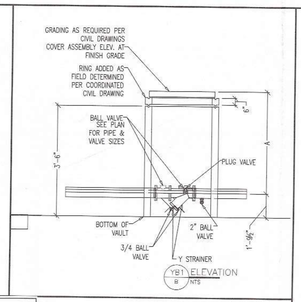

YB1 ELEVATION
B /NTS

102x54x48 Yard Box						
Yard Box #	Bottom of Box	Top of Box	Number of 6" Rings needed	Base & Lid	A-ft	
13	97.25	101.91	2.00	3.912	4.66	
17	97.55	103	4.00	3.912	5.45	

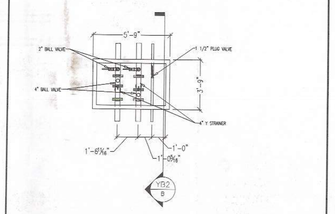

YB2 PLAN
A /NTS

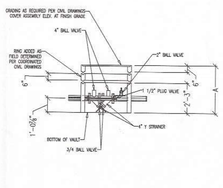

YB2 ELEVATION
B /NTS

69X45X33 Yard Box						
Yard Box #	Bottom of Box	Top of Box	Number of 6" Rings needed	Base & Lid	A-ft	
14	99	101.92	1.00	2.75	2.92	

NOTES:

1) [XX9-XX9] = ELEVATION OF BOTTOM OF INSULATION JACKET
2) SEE PERMA-PIPE FAB DRAWING NUMBER 16-4-BE SHEET 5
3) (SS-XXX) = SPOOL IDENTIFICATION TAG
SEE PERMA-PIPE FAB DRAWING NUMBER 16-4-BC SHEETS 13,14,15,&16
4) GAS LINE IS HALF TONE FOR REFERENCE ONLY

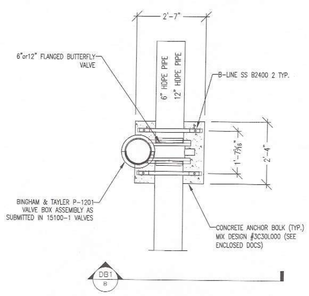

DB1 ANCHOR FOR 12" BURIED VALVE
A PLAN VIEW

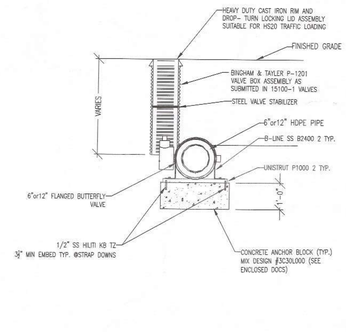

DB1 ANCHOR FOR 12" BURIED VALVE
B ELEV. VIEW

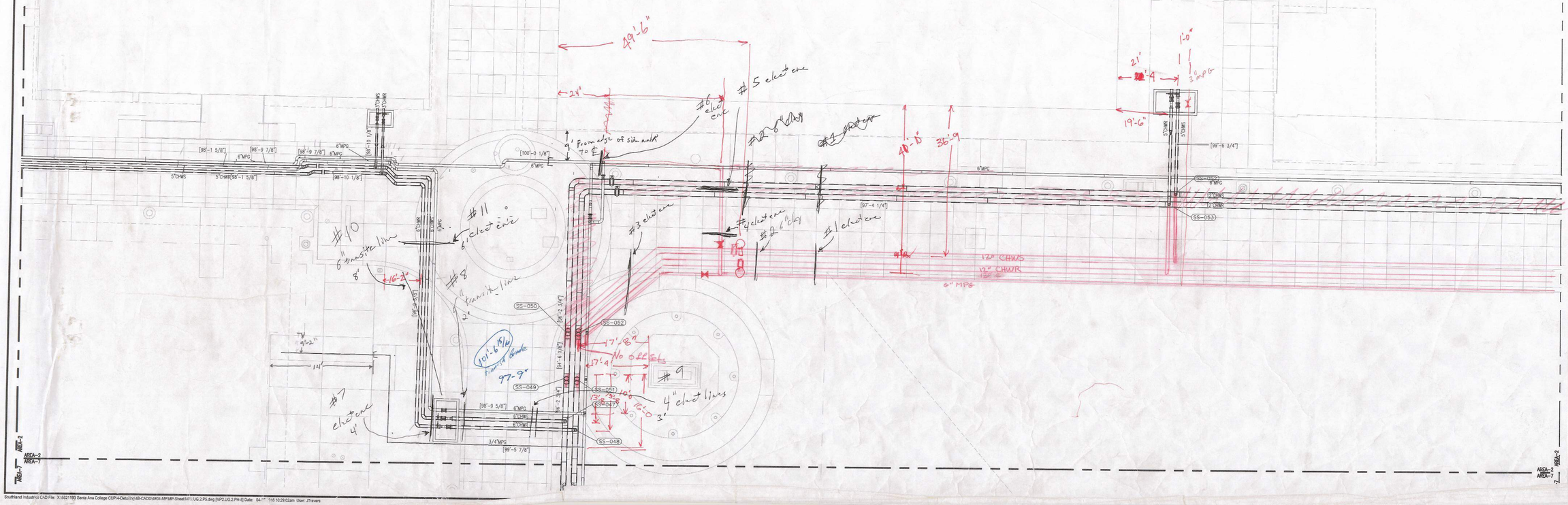

Southland

7390 LINCOLN WAY
GARDEN GROVE CALIFORNIA
92841
714.901.5800
www.southlandind.com

FOR APPROVAL

04/22/2016

NO.	REVISION DESCRIPTION	DATE

DRAWN BY	JT	DATE	02/11/2016
DESIGNED BY		SCALE	1/8" = 1'-0"
CHECKED BY		JOB NO.	5521193

KEY PLAN

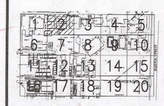

JOB TITLE

SANTA ANA COLLEGE

1530 West 17th Street

Santa Ana, CA 92706

DRAWING TITLE

LEVEL UG : AREA G
MECHANICAL PIPING
CHWS & R AND MPG

DRAWING NO.

IF THIS DRAWING IS NOT 48x36 IT HAS BEEN SCALED

THIS DRAWING IS THE PROPERTY OF SOUTHLAND INDUSTRIES AND IS NOT TO BE USED FOR ANY WORK EXCEPT WITH THE WRITTEN PERMISSION OF SOUTHLAND INDUSTRIES. IT IS LOANED SUBJECT TO RETURN UPON DEMAND AND IS NOT TO BE COPIED OR REPRODUCED IN WHOLE OR IN PART.

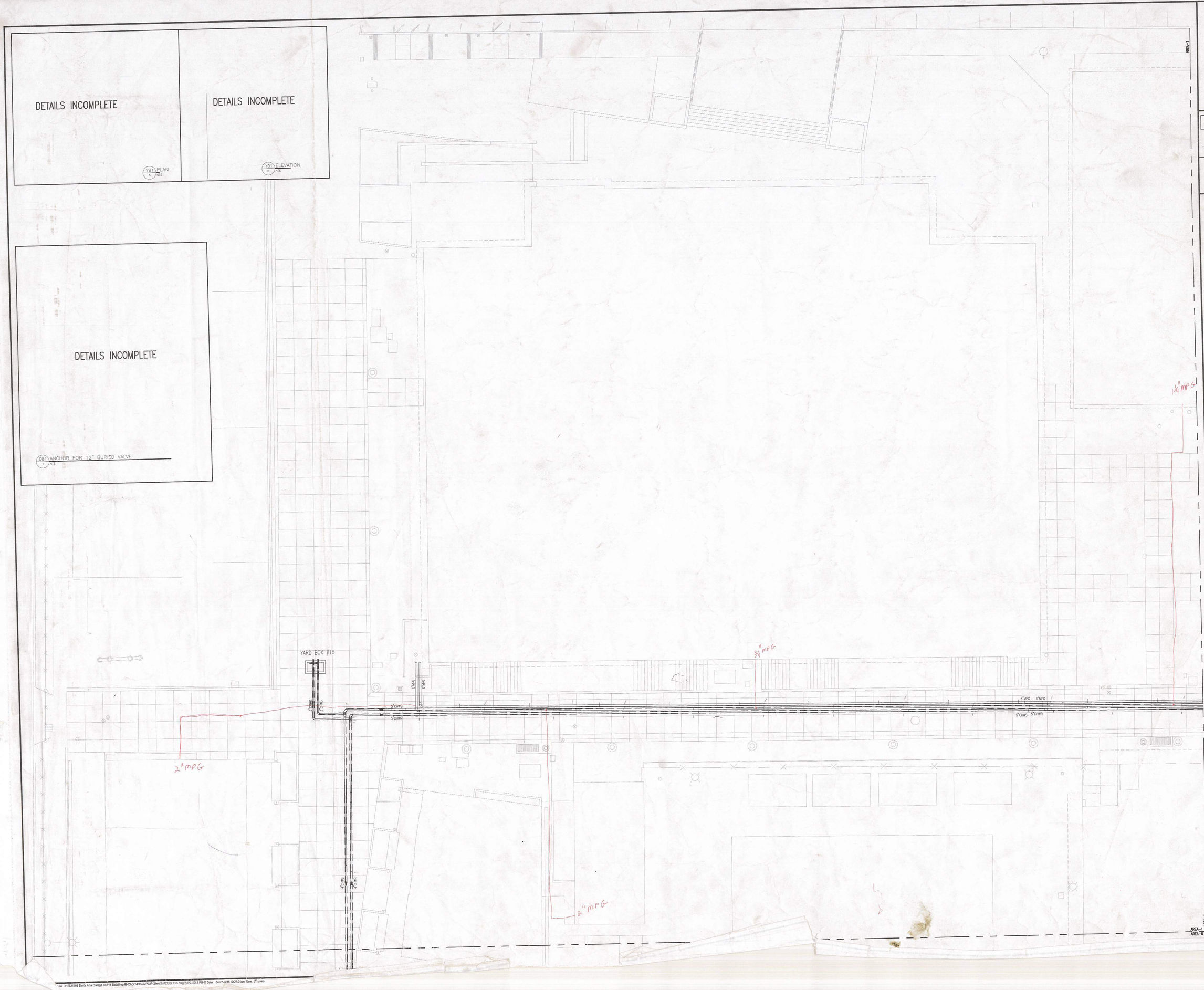

Southland

7390 LINCOLN WAY
GARDEN GROVE CALIFORNIA
92841
714.901.5800
www.southlandind.com

PROGRESS PRINT

NOT FOR CONSTRUCTION
3/21/2016
THIS DRAWING IS NOT A FINISHED PRODUCT AND IS IN THE PROCESS OF CHANGE

DRAWN BY	JT	DATE	02/11/2
DESIGNED BY		SCALE	1/8" = 1
CHECKED BY		JOB NO	55211

KEY PLAN

1	2	3	4	5
6	7	8	9	10
11	12	13	14	15
16	17	18	19	20

Red Line

JOB TITLE

SANTA ANA COLLEGE

1530 West 17th Street

Santa Ana, CA 92706

DRAWING TITLE

LEVEL UG : AREA G
MECHANICAL PIPING
CHWS & R AND MPG

DRAWING NO.

File: X:\5521193 Santa Ana College CUP\4-Detailing\4B-CADD\4B04-MP\MP-Sheet\MP2.UG.1.PS.dwg [MP2.UG.1.PH-1] Date: 04-27-2016 10:27:24am User: JTrivers

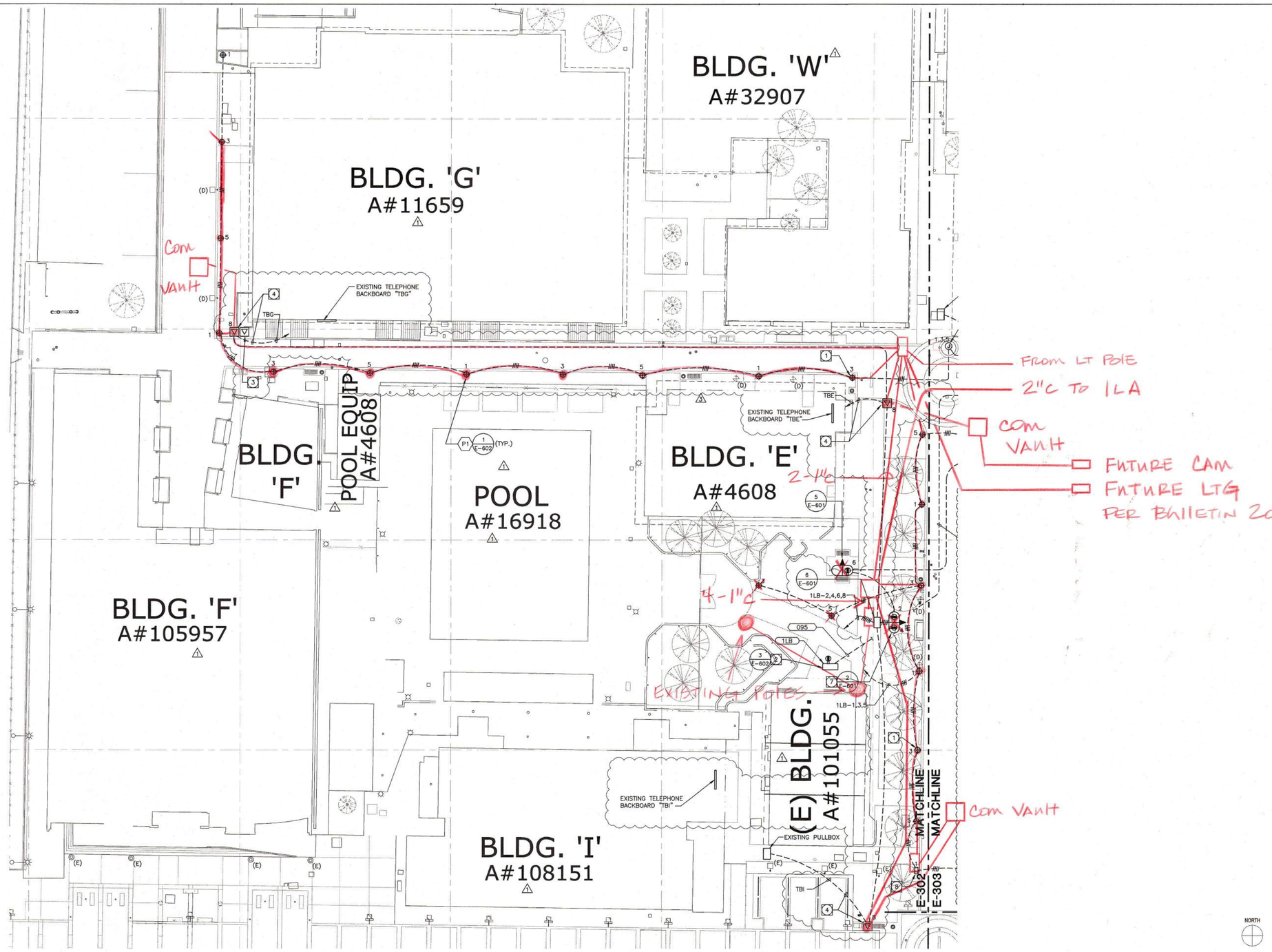

ENLARGED SITE LIGHTING AND POWER PLAN SCALE: 1"=20'-0" 1

GENERAL DEMOLITION NOTES:

1. THE ELECTRICAL DRAWINGS ARE DIAGRAMMATIC ONLY. DO NOT SCALE THE ELECTRICAL DRAWINGS TO DETERMINE THE LOCATION OF EQUIPMENT OR OUTLETS. SEE ARCHITECTURAL PLANS, WHERE PROVIDED ON PROJECT, FOR EXTENT OF DEMOLITION.
2. THE EXISTING CONDITIONS SHOWN ARE FROM AVAILABLE RECORD DRAWINGS AND SHOWN FOR REFERENCE ONLY. CONTRACTOR SHALL VERIFY ACTUAL EXISTING CONDITIONS AT SITE PRIOR TO SUBMITTING BID. ALL DEMOLITION, ALTERATION, EXTENSION, RELOCATION, REHABILITATION WORK SHALL BE INCLUDED IN CONTRACT. NO ADDITIONAL ALLOWANCE OR CHANGE ORDERS WILL BE ACCEPTED.
3. CONTRACTOR IS RESPONSIBLE TO RELOCATE OR REMOVE FROM WALLS, CEILINGS, FLOOR SPACES, ETC. ANY EXISTING CONDUITS, WIRES, BOXES, FITTINGS, FIXTURES OR OTHER ELECTRICAL EQUIPMENT WHICH INTERFERES WITH PLANNED REMODEL WORK. PROVIDE CIRCUIT CONTINUATION REQUIRED FOR ALL EXISTING OUTLETS, FIXTURES, EQUIPMENT, ETC. SCHEDULED TO REMAIN.
4. NOTIFY THE ENGINEER IMMEDIATELY WHEREVER EXISTING EQUIPMENT IS ENCOUNTERED WHICH MUST BE RELOCATED DUE TO THE NEW CONSTRUCTION, OR NOT INDICATED ON "AS-BUILT" DRAWINGS OR WAS BURIED UNDERGROUND OR EMBEDDED IN STRUCTURE WALLS.
5. CAREFULLY PROTECT ALL WALLS, TRIM, FLOORS, EQUIPMENT, UTILITY LINES AND MATERIALS. WHEN WORKING ON FINISHED SURFACES, LIMIT DAMAGE TO THE SMALLER AREA IF POSSIBLE AND RESTORE TO THE ORIGINAL CONDITION ALL SURFACES WHICH ARE DAMAGED BECAUSE OF THE INSTALLATION OF THIS WORK.
6. EQUIPMENT, MATERIALS AND SUPPLIES TEMPORARILY REMOVED FOR PROTECTION SHALL BE REPLACED IN ORIGINAL LOCATIONS. ANY MATERIALS DAMAGED SHALL BE REPLACED WITH NEW MATERIALS OF LIKE KIND AND QUALITY.
7. DEMOLITION WORK SHALL BE DONE IN A MANNER WHICH WILL NOT CAUSE UNNECESSARY INCONVENIENCE OR DANGER TO USERS OF THE PREMISES AND ADJACENT SITE, AND NOT INTERFERE WITH ITS OPERATION. ANY DEMOLITION WORK TO BE PERFORMED MUST BE PLANNED IN ADVANCE.
8. DO ALL DRILLING, CUTTING, ETC. REQUIRED TO DEMOLISH ELECTRICAL WORK AS INDICATED OR PROVIDE BLANK COVER PLATE ON ALL OUTLETS EXPOSED BY REMOVAL OF FIXTURE OF DEVICES.
9. RESEAL ALL PENETRATIONS OR OPENING THROUGH WALLS, CEILING, FLOORS, ETC., TO MAINTAIN THE RATING OF STRUCTURE.
10. ALL REMOVED MATERIALS AND EQUIPMENT WHICH ARE SALVAGED MATERIALS SHALL REMAIN IN THE PROPERTY OF THE OWNER. DELIVER SUCH SALVAGED MATERIALS AND EQUIPMENT ON THE PREMISES AS DIRECTED BY OWNER AND NEATLY PILE OR STORE AND PROTECT FROM DAMAGE. DISPOSE OF ALL HAZARDOUS MATERIAL PER FEDERAL, STATE AND LOCAL REGULATIONS AND OTHER AGENCIES HAVING JURISDICTION.
11. CONTRACTOR SHALL FIELD VERIFY EXISTING CONDUIT/WIRING RUNS, REUSE AS REQUIRED AND REMOVE ALL UNUSED CONDUIT/WIRING. UNUSED CONDUIT IN INACCESSIBLE LOCATIONS (WALLS TO REMAIN) CAN BE ABANDONED IN PLACE. REMOVE UNUSED WIRING. TO INCLUDE ABANDONED TELEPHONE, DATA AND OTHER LOW VOLTAGE SYSTEMS CABLING AFTER CONFIRMING WITH THE OWNER'S PROJECT MANAGER THAT CABLING IS ABANDONED AND WILL NOT BE RE-USED.
12. CONTRACTOR TO VERIFY CIRCUIT NUMBER AND LOADS FOR ALL EXISTING EQUIPMENT PRIOR TO INSTALLATION OF NEW OR RELOCATED ELECTRICAL EQUIPMENT. REASSIGN CIRCUITS AND LOADS ACCORDINGLY. PROVIDE COMPLETE "AS BUILT" DRAWINGS AND TYPEWRITTEN DIRECTORIES FOR PANELS.
13. WHERE NECESSARY TO SHUT OFF UTILITY SERVICES OR CAUSE INTERRUPTION TO POWER OR SIGNAL SYSTEMS WHILE A BUILDING IS OCCUPIED OR THAT EFFECT ADJACENT BUILDINGS, SCHEDULE OUTAGES OR INTERRUPTIONS WITH THE OWNER, BUILDING OCCUPANTS AND/OR ADJACENT BUILDING OWNER(S) AND OCCUPANTS PRIOR TO CONDUCTING OUTAGE(S) OR INTERRUPTIONS.

SITE PLAN GENERAL NOTES:

1. CONTRACTOR SHALL EXERCISE EXTREME CAUTION IN EXCAVATING AND TRENCHING ON THIS SITE TO AVOID EXISTING DUCTS, PIPING OR CONDUITS, ETC., AND TO PREVENT HAZARDS TO PERSONNEL AND/OR DAMAGE TO EXISTING UNDERGROUND UTILITIES OR STRUCTURES WHETHER OR NOT SHOWN AND INSTALLED BY ANY OTHER CONTRACTS. THE ENGINEER IS NOT RESPONSIBLE FOR THE LOCATION OF UNDERGROUND UTILITIES OR STRUCTURES WHETHER OR NOT SHOWN OR DETAILED AND INSTALLED BY ANY OTHER CONTRACTS. THE CONTRACTOR SHALL IMMEDIATELY NOTIFY THE ENGINEER SHOULD SUCH UNIDENTIFIED CONDITIONS BE DISCOVERED. THESE DRAWINGS AND SPECIFICATIONS DO NOT INCLUDE THE NECESSARY ELEMENTS FOR CONSTRUCTION SAFETY.
2. CALL UNDERGROUND SERVICE ALERT (USA) AT 1 (800) 422-4133 OR APPLICABLE STATE AND LOCAL DIG SAFE OR UNDERGROUND ALERT HOTLINES PRIOR TO CONSTRUCTION START.
3. MINIMUM CONDUIT SIZE SHALL BE 3/4" - U.O.N.
4. MINIMUM CONDUCTOR SIZE SHALL BE #10 AWG. - U.O.N.
5. ALL SITE BRANCH CIRCUITS SHALL INCLUDE A NEC SIZED EQUIPMENT GROUND CONDUCTOR.
6. ALL ELECTRICAL EQUIPMENT MOUNTED OUTDOORS SHALL BE WEATHERPROOF (NEMA #3R).
7. ALL CONDUIT ONLY SHALL BE PROVIDED WITH A NYLON PULL STRING.
8. SEE ARCHITECTURAL/LANDSCAPE ARCHITECTURAL PLANS FOR EXACT LOCATIONS OF FIXTURES, PULLBOXES, MANHOLES, OTHER ELECTRICAL DEVICES, ETC. COORDINATE ALL UNDERGROUND STRUCTURES AND CONDUIT ROUTING WITH LANDSCAPE ARCHITECT PRIOR TO ROUGH-IN TO ENSURE THAT SUCH ITEMS ARE NOT PLACED IN CRITICAL LANDSCAPE PLANTING/HARDSCAPE AREAS.
9. UNLESS SPECIFICALLY SHOWN AS (E), (R), (ER), (D), EXISTING OR NON-BOLD, ALL ELECTRICAL DEVICES SHOWN ARE NEW.
10. PRIOR TO ANY EXCAVATION THE CONTRACTOR SHALL LOCATE AND VERIFY ALL UNDERGROUND UTILITIES BY SCANNING AND POTHOLING AND/OR WHATEVER MEANS NECESSARY.

SITE CIRCUITING:

- --##-- = 1"C.4#8 & 1#8 GND.
- --#--- = 3/4"C. 3#8 & 1#8 GND.
- ----- = 3/4"C. 2#8 & 1#8 GND.

PLAN NOTES:

1. EXISTING TO BE REMOVED ALONG WITH ASSOCIATED CONDUIT AND WIRE AND REPLACED WITH NEW.
2. DISTRIBUTION CABINET. VERIFY LOCATION WITH ARCHITECT PRIOR TO INSTALLATION.
3. EXISTING EMERGENCY PHONE TO BE REMOVED.
4. NEW EMERGENCY PHONE. PROVIDE ALL NECESSARY WIRING, CONDUIT, CABLE, ETC. FOR A COMPLETE INSTALLATION. VERIFY EXACT LOCATION WITH ARCHITECT PRIOR TO INSTALLATION. PROVIDE ONE 3/4" C. WITH ONE CAT 6 OSP RATED CABLE TO TELEPHONE BACKBOARD. SEE DETAIL #6, SHEET A027 FOR FOUNDATION REQUIREMENTS.
5. NOT USED.
6. NOT USED.
7. VENDING MACHINES. MOUNTED FLUSH IN CMU WALL. SEE DETAIL #19, SHEET A026. VERIFY EXACT MOUNTING LOCATION PRIOR TO ROUGH-IN.
8. CONNECT TO DIRECTORY AS REQUIRED. VERIFY EXACT LOCATION IN FIELD.

SEARCHABLE SET 6-8-2015

C:\PROJECTS\RSC\SRSC01\EXST_SYS 12/19/95 11:15

architecture
westbergwhite
14471 CHAMBERS RD, SUITE 210
TUSTIN, CA 92780
(714) 508-1780 508-1790 FAX
1775 HANCOCK ST, SUITE 120
SAN DIEGO, CA 92110
(619) 542-1188 542-1663 FAX
719 S. McCLELLAND STREET
SANTA MARIA, CA 93454
(805) 346-2991 346-0790 FAX

CONSULTANT:
tk1sc COLLABORATIVE
15231 Laguna Canyon Road, Suite 100
Irvine, California 92618
949.751.5800 www.tk1sc.com
Jerry Leonhardt
tk1sc Job #: 2013-0538

PROJECT NAME:

Santa Ana College
Quad and Infrastructure Renovation
1530 West 17th Street
Santa Ana, California 92706

CLIENT:
Rancho Santiago Community College District
2323 North Broadway
Santa Ana, CA 92706

No.	Rev. Date	Description
2	04/15/2015	ADDENDUM 02
3	05/12/2015	ADDENDUM 03

JOB NO: 13022.02
DATE: 03/06/2015
DRAWN: MM / RR / RB
CHECK: JG / MM
ARCHITECT: PDW
ENGINEER:
ARCHITECT:

CONSULTANT:

REGISTERED PROFESSIONAL ENGINEER RAYMOND W. SWEITZER No. E15610 12/31/15 ELECTRICAL STATE OF CALIFORNIA

STATE:

IDENTIFICATION STAMP
DIV. OF THE STATE ARCHITECT
OFFICE OF REGULATION SERVICES
APP NO: 04-113798
FILE NO: 30-C2
AC ____ FLS ____ SS ____
DATE ____

SHEET DESCRIPTION:
ENLARGED SITE LIGHTING AND POWERPLAN

SHEET NO:
E-302

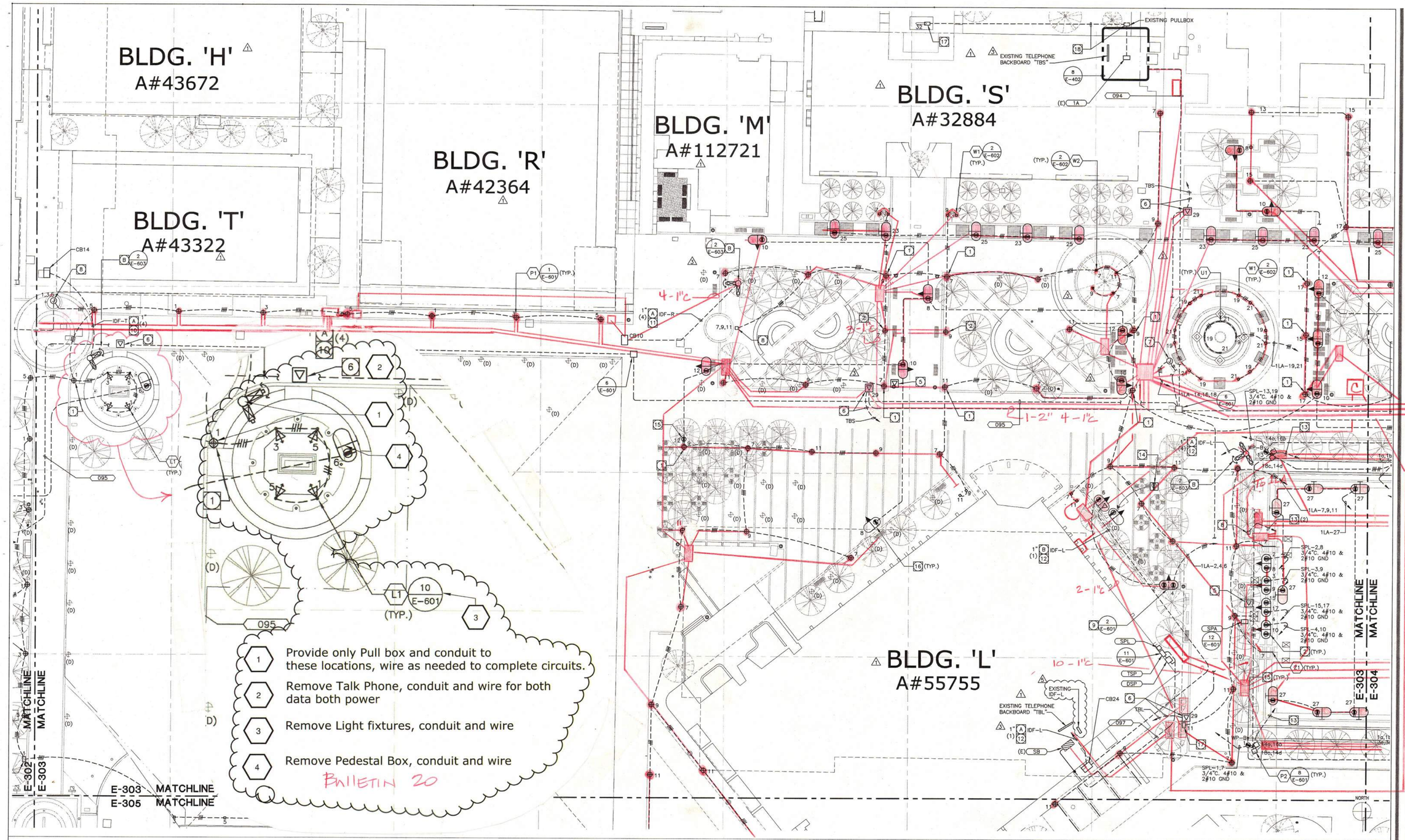

ENLARGED SITE LIGHTING AND POWER PLAN SCALE: 1"=20'-0" 1

GENERAL DEMOLITION NOTES:

1. THE ELECTRICAL DRAWINGS ARE DIAGRAMMATIC ONLY. DO NOT SCALE THE ELECTRICAL DRAWINGS TO DETERMINE THE LOCATION OF EQUIPMENT OR OUTLETS. SEE ARCHITECTURAL PLANS, WHERE PROVIDED ON PROJECT, FOR EXTENT OF DEMOLITION.
2. THE EXISTING CONDITIONS SHOWN ARE FROM AVAILABLE RECORD DRAWINGS AND SHOWN FOR REFERENCE ONLY. CONTRACTOR SHALL VERIFY ACTUAL EXISTING CONDITIONS AT SITE PRIOR TO SUBMITTING BID. ALL DEMOLITION, ALTERATION, EXTENSION, RELOCATION, REHABILITATION WORK SHALL BE INCLUDED IN CONTRACT. NO ADDITIONAL ALLOWANCE OR CHANGE ORDERS WILL BE ACCEPTED.
3. CONTRACTOR IS RESPONSIBLE TO RELOCATE OR REMOVE FROM WALLS, CEILINGS, FLOOR SPACES, ETC. ANY EXISTING CONDUITS, WIRES, BOXES, FITTINGS, FIXTURES OR OTHER ELECTRICAL EQUIPMENT WHICH INTERFERES WITH PLANNED REMODEL WORK. PROVIDE CIRCUIT CONTINUATION REQUIRED FOR ALL EXISTING OUTLETS, FIXTURES, EQUIPMENT, ETC. SCHEDULED TO REMAIN.
4. NOTIFY THE ENGINEER IMMEDIATELY WHEREVER EXISTING EQUIPMENT IS ENCOUNTERED WHICH MUST BE RELOCATED DUE TO THE NEW CONSTRUCTION, OR NOT INDICATED ON "AS-BUILT" DRAWINGS OR WAS BURIED UNDERGROUND OR EMBEDDED IN STRUCTURE WALLS.
5. CAREFULLY PROTECT ALL WALLS, TRIM, FLOORS, EQUIPMENT, UTILITY LINES AND MATERIALS. WHEN WORKING ON FINISHED SURFACES, LIMIT DAMAGE TO THE SMALLER AREA IF POSSIBLE AND RESTORE TO THE ORIGINAL CONDITION ALL SURFACES WHICH ARE DAMAGED BECAUSE OF THE INSTALLATION OF THIS WORK.
6. EQUIPMENT, MATERIALS AND SUPPLIES TEMPORARILY REMOVED FOR PROTECTION SHALL BE REPLACED IN ORIGINAL LOCATIONS. ANY MATERIALS DAMAGED SHALL BE REPLACED WITH NEW MATERIALS OF LIKE KIND AND QUALITY.
7. DEMOLITION WORK SHALL BE DONE IN A MANNER WHICH WILL NOT CAUSE UNNECESSARY INCONVENIENCE OR DANGER TO USERS OF THE PREMISES AND ADJACENT SITE, AND NOT INTERFERE WITH ITS OPERATION. ANY DEMOLITION WORK TO BE PERFORMED MUST BE PLANNED IN ADVANCE.
8. DO ALL DRILLING, CUTTING, ETC. REQUIRED TO DEMOLISH ELECTRICAL WORK AS INDICATED OR PROVIDE BLANK COVER PLATE ON ALL OUTLETS EXPOSED BY REMOVAL OF FIXTURE OF DEVICES.
9. RESEAL ALL PENETRATIONS OR OPENING THROUGH WALLS, CEILING, FLOORS, ETC., TO MAINTAIN THE RATING OF STRUCTURE.
10. ALL REMOVED MATERIALS AND EQUIPMENT WHICH ARE SALVAGED MATERIALS SHALL REMAIN IN THE PROPERTY OF THE OWNER. DELIVER SUCH SALVAGED MATERIALS AND EQUIPMENT ON THE PREMISES AS DIRECTED BY OWNER AND NEATLY PILE OR STORE AND PROTECT FROM DAMAGE. DISPOSE OF ALL HAZARDOUS MATERIAL PER FEDERAL, STATE AND LOCAL REGULATIONS AND OTHER AGENCIES HAVING JURISDICTION.
11. CONTRACTOR SHALL FIELD VERIFY EXISTING CONDUIT/WIRING RUNS, REUSE AS REQUIRED AND REMOVE ALL UNUSED CONDUIT/WIRING. UNUSED CONDUIT IN INACCESSIBLE LOCATIONS (WALLS TO REMAIN) CAN BE ABANDONED IN PLACE. REMOVE UNUSED WIRING. TO INCLUDE ABANDONED TELEPHONE, DATA AND OTHER LOW VOLTAGE SYSTEMS CABLING AFTER CONFIRMING WITH THE OWNER'S PROJECT MANAGER THAT CABLING IS ABANDONED AND WILL NOT BE RE-USED.
12. CONTRACTOR TO VERIFY CIRCUIT NUMBER AND LOADS FOR ALL EXISTING EQUIPMENT PRIOR TO INSTALLATION OF NEW OR RELOCATED ELECTRICAL EQUIPMENT. REASSIGN CIRCUITS AND LOADS ACCORDINGLY. PROVIDE COMPLETE "AS BUILT" DRAWINGS AND TYPEWRITTEN DIRECTORIES FOR PANELS.
13. WHERE NECESSARY TO SHUT OFF UTILITY SERVICES OR CAUSE INTERRUPTION TO POWER OR SIGNAL SYSTEMS WHILE A BUILDING IS OCCUPIED OR THAT EFFECT ADJACENT BUILDINGS, SCHEDULE OUTAGES OR INTERRUPTIONS WITH THE OWNER, BUILDING OCCUPANTS AND/OR ADJACENT BUILDING OWNER(S) AND OCCUPANTS PRIOR TO CONDUCTING OUTAGE(S) OR INTERRUPTIONS.

SITE CIRCUITING:

--##-- = 1"C. 4#8 & 1#8 GND.
--##-- = 3/4"C. 3#8 & 1#8 GND.
------ = 3/4"C. 2#8 & 1#8 GND.

SITE PLAN GENERAL NOTES:

1. CONTRACTOR SHALL EXERCISE EXTREME CAUTION IN EXCAVATING AND TRENCHING ON THIS SITE TO AVOID EXISTING DUCTS, PIPING OR CONDUITS, ETC., AND TO PREVENT HAZARDS TO PERSONNEL AND/OR DAMAGE TO EXISTING UNDERGROUND UTILITIES OR STRUCTURES WHETHER OR NOT SHOWN AND INSTALLED BY ANY OTHER CONTRACTS. THE ENGINEER IS NOT RESPONSIBLE FOR THE LOCATION OF UNDERGROUND UTILITIES OR STRUCTURES WHETHER OR NOT SHOWN OR DETAILED AND INSTALLED BY ANY OTHER CONTRACTS. THE CONTRACTOR SHALL IMMEDIATELY NOTIFY THE ENGINEER SHOULD SUCH UNIDENTIFIED CONDITIONS BE DISCOVERED. THESE DRAWINGS AND SPECIFICATIONS DO NOT INCLUDE THE NECESSARY ELEMENTS FOR CONSTRUCTION SAFETY.
2. CALL UNDERGROUND SERVICE ALERT (USA) AT 1 (800) 422-4133 OR APPLICABLE STATE AND LOCAL DIG SAFE OR UNDERGROUND ALERT HOTLINES PRIOR TO CONSTRUCTION START.
3. MINIMUM CONDUIT SIZE SHALL BE 3/4" - U.O.N.
4. MINIMUM CONDUCTOR SIZE SHALL BE #10 AWG. - U.O.N.
5. ALL SITE BRANCH CIRCUITS SHALL INCLUDE A NEC SIZED EQUIPMENT GROUND CONDUCTOR.
6. ALL ELECTRICAL EQUIPMENT MOUNTED OUTDOORS SHALL BE WEATHERPROOF (NEMA #3R).
7. ALL CONDUIT ONLY SHALL BE PROVIDED WITH A NYLON PULL STRING.
8. SEE ARCHITECTURAL/LANDSCAPE ARCHITECTURAL PLANS FOR EXACT LOCATIONS OF FIXTURES, PULLBOXES, MANHOLES, OTHER ELECTRICAL DEVICES, ETC. COORDINATE ALL UNDERGROUND STRUCTURES AND CONDUIT ROUTING WITH LANDSCAPE ARCHITECT PRIOR TO ROUGH-IN TO ENSURE THAT SUCH ITEMS ARE NOT PLACED IN CRITICAL LANDSCAPE PLANTING/HARDSCAPE AREAS.
9. UNLESS SPECIFICALLY SHOWN AS (E), (R), (ER), (D), EXISTING OR NON-BOLD, ALL ELECTRICAL DEVICES SHOWN ARE NEW.
10. PRIOR TO ANY EXCAVATION THE CONTRACTOR SHALL LOCATE AND VERIFY ALL UNDERGROUND UTILITIES BY SCANNING AND POTHOLING AND/OR BY WHATEVER MEANS NECESSARY.

PLAN NOTES:

1. EXISTING TO BE REMOVED ALONG WITH ASSOCIATED CONDUIT AND WIRE AND REPLACED WITH NEW.
2. VERIFY EXACT MOUNTING LOCATION WITH ARCHITECT PRIOR TO ROUGH-IN.
3. 3/4"C., 3#10 & 1#10 GND TO NEAREST AVAILABLE 120V, 20A/1P CIRCUITS, PROVIDE NEW 20A/1P CIRCUIT BREAKERS TO MATCH EXISTING IN PANEL. VERIFY EXTEND OF WORK PRIOR TO BID.
4. 3/4"C., 2#10.
5. EXISTING EMERGENCY PHONE TO BE REMOVED.
6. NEW EMERGENCY PHONE. PROVIDE ALL NECESSARY WIRING, CONDUIT, CABLE, ETC. FOR A COMPLETE INSTALLATION. VERIFY EXACT LOCATION WITH ARCHITECT PRIOR TO INSTALLATION. PROVIDE ONE 3/4" C. WITH ONE CAT 6 OSP RATED CABLE TO TELEPHONE BACKBOARD. SEE DETAIL #6, SHEET A027 FOR FOUNDATION REQUIREMENTS.
7. CONNECT TO FOUNTAIN CONTROL PANEL AS REQUIRED. VERIFY EXACT LOCATION WITH FOUNTAIN EQUIPMENT INSTALLER.
8. 12" x 12" FLUSH IN-GRADE PULLBOX WITH BOLTED COVER FOR FUTURE USE.
9. VENDING MACHINES. MOUNTED FLUSH IN CMU WALL. SEE DETAIL #19, SHEET A026. VERIFY EXACT MOUNTING LOCATION PRIOR TO ROUGH-IN.
10. 1"C. WITH ONE CAT6 CABLE PER SPECIFICATION TO IDF VIA PULLBOX. SEE SHEET E-202 FOR MORE INFORMATION. VERIFY EXTENT OF WORK PRIOR TO BID.
11. 1"C. WITH ONE CAT6 CABLE PER SPECIFICATION TO IDF VIA PULLBOX. SEE SHEET E-203 FOR MORE INFORMATION. VERIFY EXTENT OF WORK PRIOR TO BID.

PLAN NOTES:

A. CONDUIT WITH CAT 6 CABLING PER SPECIFICATION. NUMBER ADJACENT PLAN NOTE INDICATES SIZE OF CONDUIT. NUMBER ADJACENT PLAN NOTE IN PARENTHESIS INDICATES NUMBER OF CABLES. PROVIDE 25' COIL OF SPARE CABLE IN BASE OF POLE AS REQUIRED.

B. USA ARCHITECTURAL #204-7 SQUARE, STRAIGHT, STEEL 20' POLE WITH CUSTOM COLOR PER ARCHITECT AND FACTORY KNOCK OUTS FOR CCTV CAMERAS. VERIFY CAMERA KNOCK OUT LOCATIONS WITH OWNER.

12. 1"C. WITH ONE CAT6 CABLE PER SPECIFICATION TO IDF VIA PULLBOX. SEE SHEET E-206 FOR MORE INFORMATION. VERIFY EXTENT OF WORK PRIOR TO BID.
13. 2"C.O. TO PBA.
14. EXISTING KIOSK RECEPTACLE TO BE RELOCATED. INTERCEPT EXISTING CIRCUITING AND EXTEND TO NEW LOCATION AS REQUIRED. PROVIDE ALL NECESSARY WIRING, CONDUIT, CABLE, ETC. FOR A COMPLETE INSTALLATION. VERIFY EXACT LOCATION WITH ARCHITECT PRIOR TO INSTALLATION. VERIFY CIRCUIT NUMBER IN FIELD.
15. PROVIDE GFCI RECEPTACLE WITH LOCKING WEATHERPROOF WHILE IN USE COVER MOUNTED ON POLE AT +18" A.F.F.
16. FOR RECEPTACLE PEDESTALS MOUNTED AT BENCHES SEE DETAIL #1, SHEET A027 FOR ACTUAL MOUNTING LOCATION.
17. CONNECT TO DIRECTORY AS REQUIRED. VERIFY EXACT LOCATION IN FIELD.
18. INTERCEPT AND EXTEND EXISTING CIRCUIT AS REQUIRED.

architecture
westbergwhite
14471 CHAMBERS RD, SUITE 210
TUSTIN, CA 92780
(714) 508-1780 508-1790 FAX
1775 HANCOCK ST, SUITE 120
SAN DIEGO, CA 92110
(619) 542-1188 542-1663 FAX
719 S. McCLELLAND STREET
SANTA MARIA, CA 93454
(805) 346-2991 346-8790 FAX

CONSULTANT:
tk|sc COLLABORATIVE
15231 Laguna Canyon Road, Suite 100
Irvine, California 92618
949.751.5800 www.tk1sc.com
Jerry Leonhardt
tk1sc Job #: 2013-0638

PROJECT NAME:
Santa Ana College
Quad and Infrastructure Renovation
1530 West 17th Street
Santa Ana, California 92706

CLIENT:
Rancho Santiago Community College District
2323 North Broadway
Santa Ana, CA 92706

No.	Rev. Date	Description
4	06/16/2015	ADDENDUM 04
5	06/29/2015	ADDENDUM 05

JOB NO: 13022.02
DATE: 03/06/2015
DRAWN: MM / RR / RB
CHECK: JG / MM
ARCHITECT: PDW
ENGINEER:
ARCHITECT:

CONSULTANT:
REGISTERED PROFESSIONAL ENGINEER EDMOND W. SARKISIAN No. E15610 STATE OF CALIFORNIA

STATE:
IDENTIFICATION STAMP DIV. OF THE STATE ARCHITECT OFFICE OF REGULATION SERVICES
APP NO: 04-113798
FILE NO: 30-C2
AC ____ FLS ____ SS ____
DATE ____

SHEET DESCRIPTION:
ENLARGED SITE LIGHTING AND POWERPLAN

SHEET NO:
E-303

C:\PROJECTS\RSC\SRSC01\EXST_SYS 12/19/95 11:15

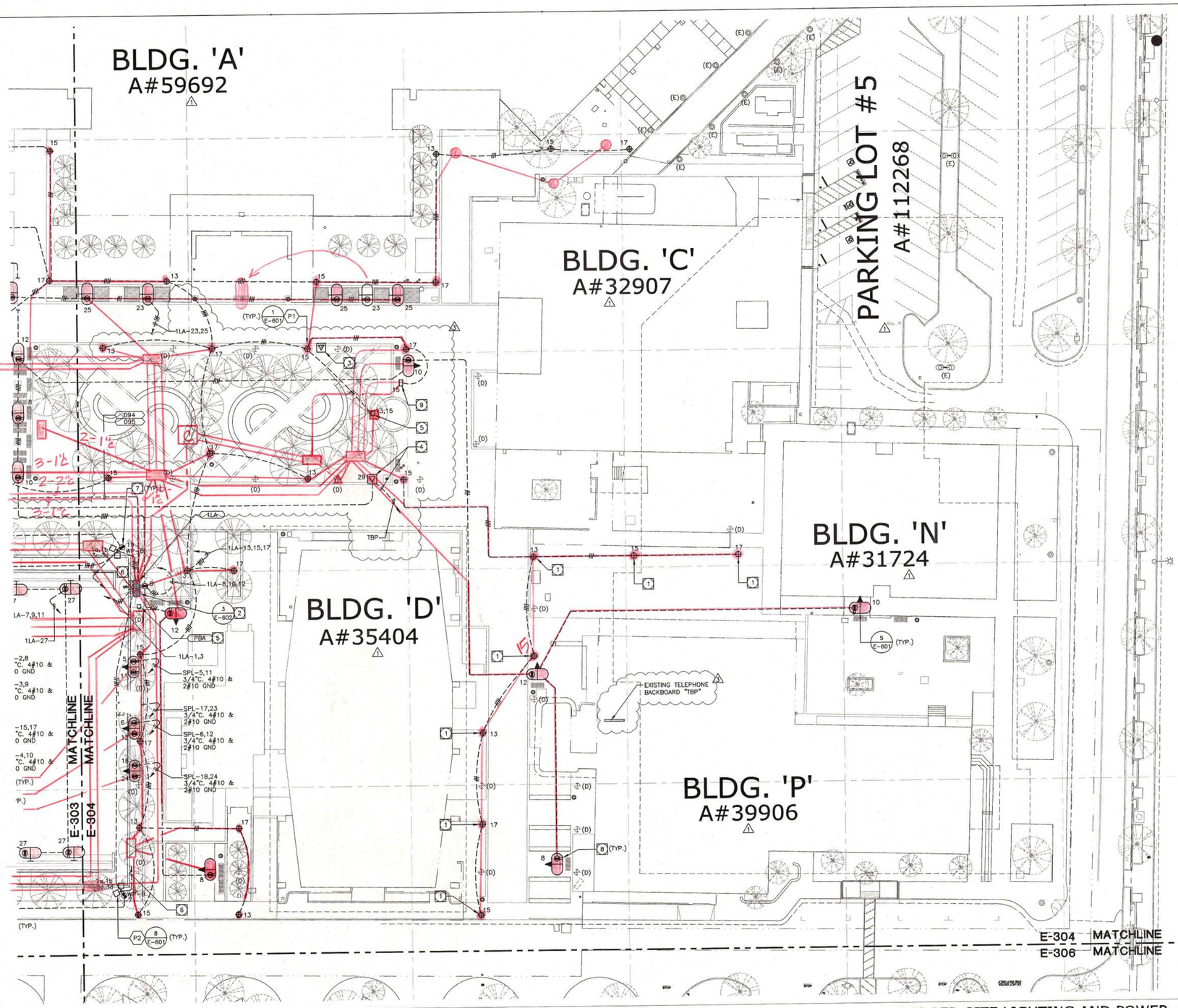

ENLARGED SITE LIGHTING AND POWER PLAN SCALE: 1"=20'-0" 1

GENERAL DEMOLITION NOTES:

1. THE ELECTRICAL DRAWINGS ARE DIAGRAMMATIC ONLY. DO NOT SCALE THE ELECTRICAL DRAWINGS TO DETERMINE THE LOCATION OF EQUIPMENT OR OUTLETS. SEE ARCHITECTURAL PLANS, WHERE PROVIDED ON PROJECT, FOR EXTENT OF DEMOLITION.
2. THE EXISTING CONDITIONS SHOWN ARE FROM AVAILABLE RECORD DRAWINGS AND SHOWN FOR REFERENCE ONLY. CONTRACTOR SHALL VERIFY ACTUAL EXISTING CONDITIONS AT SITE PRIOR TO SUBMITTING BID. ALL DEMOLITION, ALTERATION, EXTENSION, RELOCATION, REHABILITATION WORK SHALL BE INCLUDED IN CONTRACT. NO ADDITIONAL ALLOWANCE OR CHANGE ORDERS WILL BE ACCEPTED.
3. CONTRACTOR IS RESPONSIBLE TO RELOCATE OR REMOVE FROM WALLS, CEILINGS, FLOOR SPACES, ETC. ANY EXISTING CONDUITS, WIRES, BOXES, FITTINGS, FIXTURES OR OTHER ELECTRICAL EQUIPMENT WHICH INTERFERES WITH PLANNED REMODEL WORK. PROVIDE CIRCUIT CONTINUATION REQUIRED FOR ALL EXISTING OUTLETS, FIXTURES, EQUIPMENT, ETC. SCHEDULED TO REMAIN.
4. NOTIFY THE ENGINEER IMMEDIATELY WHEREVER EXISTING EQUIPMENT IS ENCOUNTERED WHICH MUST BE RELOCATED DUE TO THE NEW CONSTRUCTION, OR NOT INDICATED ON "AS-BUILT" DRAWINGS OR WAS BURIED UNDERGROUND OR EMBEDDED IN STRUCTURE WALLS.
5. CAREFULLY PROTECT ALL WALLS, TRIM, FLOORS, EQUIPMENT, UTILITY LINES AND MATERIALS. WHEN WORKING ON FINISHED SURFACES, LIMIT DAMAGE TO THE SMALLER AREA IF POSSIBLE AND RESTORE TO THE ORIGINAL CONDITION ALL SURFACES WHICH ARE DAMAGED BECAUSE OF THE INSTALLATION OF THIS WORK.
6. EQUIPMENT, MATERIALS AND SUPPLIES TEMPORARILY REMOVED FOR PROTECTION SHALL BE REPLACED IN ORIGINAL LOCATIONS. ANY MATERIALS DAMAGED SHALL BE REPLACED WITH NEW MATERIALS OF LIKE KIND AND QUALITY.
7. DEMOLITION WORK SHALL BE DONE IN A MANNER WHICH WILL NOT CAUSE UNNECESSARY INCONVENIENCE OR DANGER TO USERS OF THE PREMISES AND ADJACENT SITE, AND NOT INTERFERE WITH ITS OPERATION. ANY DEMOLITION WORK TO BE PERFORMED MUST BE PLANNED IN ADVANCE.
8. DO ALL DRILLING, CUTTING, ETC. REQUIRED TO DEMOLISH ELECTRICAL WORK AS INDICATED OR PROVIDE BLANK COVER PLATE ON ALL OUTLETS EXPOSED BY REMOVAL OF FIXTURE OF DEVICES.
9. RESEAL ALL PENETRATIONS OR OPENING THROUGH WALLS, CEILING, FLOORS, ETC., TO MAINTAIN THE RATING OF STRUCTURE.
10. ALL REMOVED MATERIALS AND EQUIPMENT WHICH ARE SALVAGED MATERIALS SHALL REMAIN IN THE PROPERTY OF THE OWNER. DELIVER SUCH SALVAGED MATERIALS AND EQUIPMENT ON THE PREMISES AS DIRECTED BY OWNER AND NEATLY PILE OR STORE AND PROTECT FROM DAMAGE. DISPOSE OF ALL HAZARDOUS MATERIAL PER FEDERAL, STATE AND LOCAL REGULATIONS AND OTHER AGENCIES HAVING JURISDICTION.
11. CONTRACTOR SHALL FIELD VERIFY EXISTING CONDUIT/WIRING RUNS, REUSE AS REQUIRED AND REMOVE ALL UNUSED CONDUIT/WIRING. UNUSED CONDUIT IN INACCESSIBLE LOCATIONS (WALLS TO REMAIN) CAN BE ABANDONED IN PLACE. REMOVE UNUSED WIRING. TO INCLUDE ABANDONED TELEPHONE, DATA AND OTHER LOW VOLTAGE SYSTEMS CABLING AFTER CONFIRMING WITH THE OWNER'S PROJECT MANAGER THAT CABLING IS ABANDONED AND WILL NOT BE RE-USED.
12. CONTRACTOR TO VERIFY CIRCUIT NUMBER AND LOADS FOR ALL EXISTING EQUIPMENT PRIOR TO INSTALLATION OF NEW OR RELOCATED ELECTRICAL EQUIPMENT. REASSIGN CIRCUITS AND LOADS ACCORDINGLY. PROVIDE COMPLETE "AS BUILT" DRAWINGS AND TYPEWRITTEN DIRECTORIES FOR PANELS.
13. WHERE NECESSARY TO SHUT OFF UTILITY SERVICES OR CAUSE INTERRUPTION TO POWER OR SIGNAL SYSTEMS WHILE A BUILDING IS OCCUPIED OR THAT EFFECT ADJACENT BUILDINGS, SCHEDULE OUTAGES OR INTERRUPTIONS WITH THE OWNER. BUILDING OCCUPANTS AND/OR ADJACENT BUILDING OWNER(S) AND OCCUPANTS PRIOR TO CONDUCTING OUTAGE(S) OR INTERRUPTIONS.

SITE PLAN GENERAL NOTES:

1. CONTRACTOR SHALL EXERCISE EXTREME CAUTION IN EXCAVATING AND TRENCHING ON THIS SITE TO AVOID EXISTING DUCTS, PIPING OR CONDUITS, ETC., AND TO PREVENT HAZARDS TO PERSONNEL AND/OR DAMAGE TO EXISTING UNDERGROUND UTILITIES OR STRUCTURES WHETHER OR NOT SHOWN AND INSTALLED BY ANY OTHER CONTRACTS. THE ENGINEER IS NOT RESPONSIBLE FOR THE LOCATION OF UNDERGROUND UTILITIES OR STRUCTURES WHETHER OR NOT SHOWN OR DETAILED AND INSTALLED BY ANY OTHER CONTRACTS. THE CONTRACTOR SHALL IMMEDIATELY NOTIFY THE ENGINEER SHOULD SUCH UNIDENTIFIED CONDITIONS BE DISCOVERED. THESE DRAWINGS AND SPECIFICATIONS DO NOT INCLUDE THE NECESSARY ELEMENTS FOR CONSTRUCTION SAFETY.
2. CALL UNDERGROUND SERVICE ALERT (USA) AT 1 (800) 422-4133 OR APPLICABLE STATE AND LOCAL DIG SAFE OR UNDERGROUND ALERT HOTLINES PRIOR TO CONSTRUCTION START.
3. MINIMUM CONDUIT SIZE SHALL BE 3/4" - U.O.N.
4. MINIMUM CONDUCTOR SIZE SHALL BE #10 AWG. - U.O.N.
5. ALL SITE BRANCH CIRCUITS SHALL INCLUDE A NEC SIZED EQUIPMENT GROUND CONDUCTOR.
6. ALL ELECTRICAL EQUIPMENT MOUNTED OUTDOORS SHALL BE WEATHERPROOF (NEMA #3R).
7. ALL CONDUIT ONLY SHALL BE PROVIDED WITH A NYLON PULL STRING.
8. SEE ARCHITECTURAL/LANDSCAPE ARCHITECTURAL PLANS FOR EXACT LOCATIONS OF FIXTURES, PULLBOXES, MANHOLES, OTHER ELECTRICAL DEVICES, ETC. COORDINATE ALL UNDERGROUND STRUCTURES AND CONDUIT ROUTING WITH LANDSCAPE ARCHITECT PRIOR TO ROUGH-IN TO ENSURE THAT SUCH ITEMS ARE NOT PLACED IN CRITICAL LANDSCAPE PLANTING/HARDSCAPE AREAS.
9. UNLESS SPECIFICALLY SHOWN AS (E), (R), (ER), (D), EXISTING OR NON-BOLD, ALL ELECTRICAL DEVICES SHOWN ARE NEW.
10. PRIOR TO ANY EXCAVATION THE CONTRACTOR SHALL LOCATE AND VERIFY ALL UNDERGROUND UTILITIES BY SCANNING AND POTHOLING AND/OR WHATEVER MEANS NECESSARY.

SITE CIRCUITING:

- --##-- = 1"C. 4#8 & 1#8 GND.
- --##-- = 3/4"C. 3#8 & 1#8 GND.
- ------ = 3/4"C. 2#8 & 1#8 GND.

PLAN NOTES:

1. EXISTING TO BE REMOVED ALONG WITH ASSOCIATED CONDUIT AND WIRE AND REPLACED WITH NEW.
2. DISTRIBUTION CABINET. VERIFY LOCATION WITH ARCHITECT PRIOR TO INSTALLATION.
3. EXISTING EMERGENCY PHONE TO BE REMOVED.
4. NEW EMERGENCY PHONE. PROVIDE ALL NECESSARY WIRING, CONDUIT, CABLE, ETC. FOR A COMPLETE INSTALLATION. VERIFY EXACT LOCATION WITH ARCHITECT PRIOR TO INSTALLATION. PROVIDE ONE 3/4" C. WITH ONE CAT 6 OSP RATED CABLE TO TELEPHONE BACKBOARD. SEE DETAIL #6, SHEET A027 FOR FOUNDATION REQUIREMENTS.
5. 12" x 12" FLUSH IN-GRADE PULLBOX WITH BOLTED COVER FOR FUTURE USE.
6. 2"C.O. TO PBA.
7. PROVIDE GFCI RECEPTACLE WITH LOCKING WEATHERPROOF WHILE IN USE COVER MOUNTED ON POLE AT +18" A.F.F.
8. FOR RECEPTACLE PEDESTALS MOUNTED AT BENCHES SEE DETAIL #1, SHEET A027 FOR ACTUAL MOUNTING LOCATION.
9. CONNECT TO DIRECTORY AS REQUIRED. VERIFY EXACT LOCATION IN FIELD.

architecture
westbergwhite
14471 CHAMBERS RD, SUITE 210
TUSTIN, CA 92780
(714) 508-1780 505-1790 FAX
1775 HANCOCK ST, SUITE 120
SAN DIEGO, CA 92110
(619) 542-1188 542-1663 FAX
719 S. McCLELLAND STREET
SANTA MARIA, CA 93454
(805) 346-2991 346-8790 FAX

CONSULTANT:
tk1sc COLLABORATIVE
15231 Laguna Canyon Road, Suite 100
Irvine, California 92618
949.751.5800 www.tk1sc.com
Jerry Leonhardt
tk1sc Job #: 2013-0538

PROJECT NAME:

Santa Ana College
Quad and Infrastructure Renovation
1530 West 17th Street
Santa Ana, California 92706

CLIENT:
Rancho Santiago Community College District
2323 North Broadway
Santa Ana, CA 92706

No.	Rev. Date	Description
2	04/15/2015	ADDENDUM 02
3	05/12/2015	ADDENDUM 03

JOB NO: 13022.02
DATE: 03/06/2015
DRAWN: MM / RR / RB
CHECK: JG / MM
ARCHITECT: PDW
ENGINEER:
ARCHITECT:

CONSULTANT:
REGISTERED PROFESSIONAL ENGINEER RAYMOND W. SWAFFORD No. E15610 12/31/15 ELECTRICAL STATE OF CALIFORNIA

STATE:
IDENTIFICATION STAMP DIV. OF THE STATE ARCHITECT OFFICE OF REGULATION SERVICES
APP NO: 04-113798
FILE NO: 30-C2
AC ____ FLS ____ SS ____
DATE ____

SHEET DESCRIPTION:
ENLARGED SITE LIGHTING AND POWER PLAN

SHEET NO:
E-304

SEARCHABLE SET 6-8-2015

C:\PROJECTS\RSC\SRSC01\EXST_SYS 12/19/95 11:15

NEED TO PICK UP BOTH CONDUITS WITH this BASE

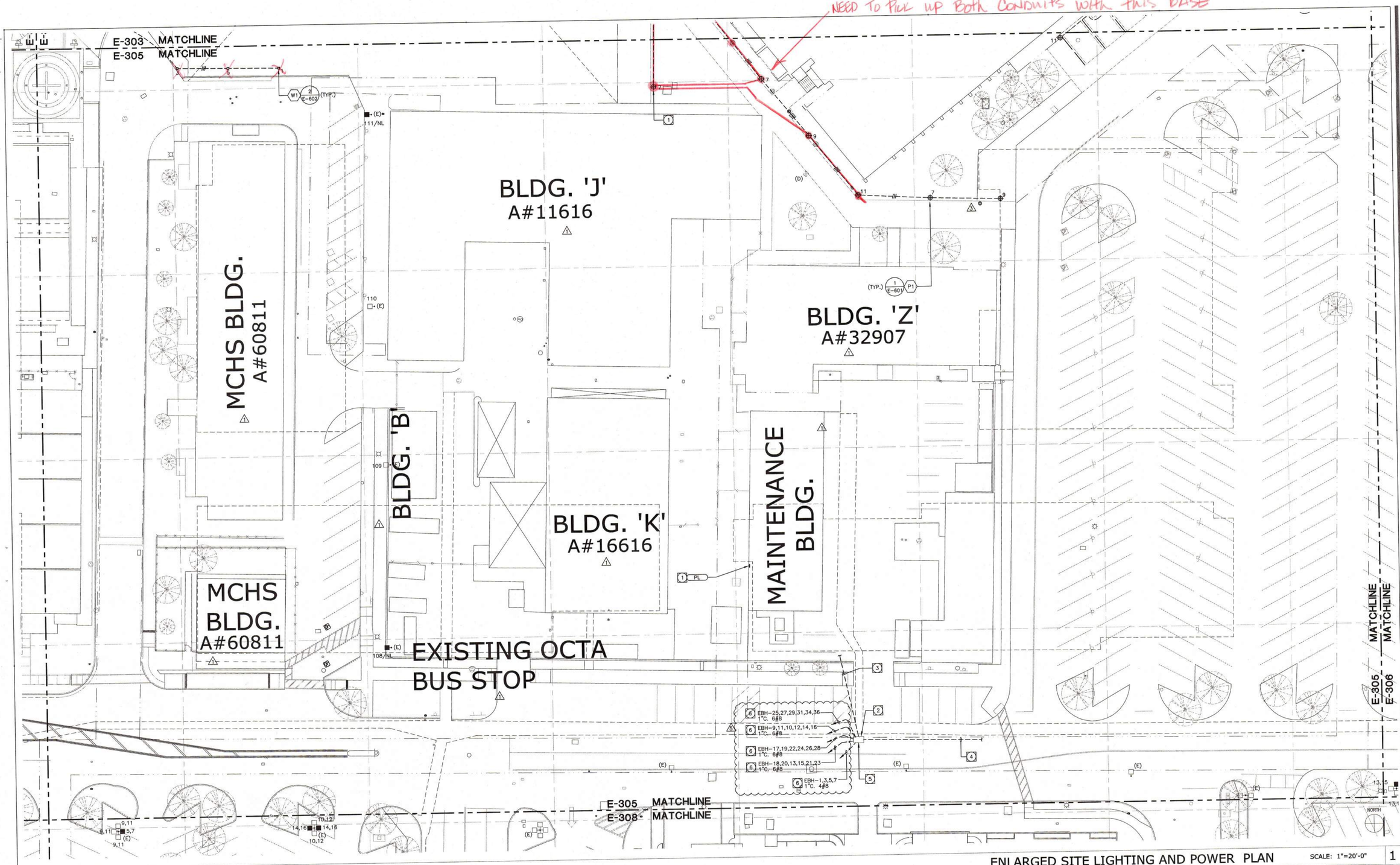

ENLARGED SITE LIGHTING AND POWER PLAN

SCALE: 1"=20'-0" | 1

GENERAL DEMOLITION NOTES:

1. THE ELECTRICAL DRAWINGS ARE DIAGRAMMATIC ONLY. DO NOT SCALE THE ELECTRICAL DRAWINGS TO DETERMINE THE LOCATION OF EQUIPMENT OR OUTLETS. SEE ARCHITECTURAL PLANS, WHERE PROVIDED ON PROJECT, FOR EXTENT OF DEMOLITION.
2. THE EXISTING CONDITIONS SHOWN ARE FROM AVAILABLE RECORD DRAWINGS AND SHOWN FOR REFERENCE ONLY. CONTRACTOR SHALL VERIFY ACTUAL EXISTING CONDITIONS AT SITE PRIOR TO SUBMITTING BID. ALL DEMOLITION, ALTERATION, EXTENSION, RELOCATION, REHABILITATION WORK SHALL BE INCLUDED IN CONTRACT. NO ADDITIONAL ALLOWANCE OR CHANGE ORDERS WILL BE ACCEPTED.
3. CONTRACTOR IS RESPONSIBLE TO RELOCATE OR REMOVE FROM WALLS, CEILINGS, FLOOR SPACES, ETC. ANY EXISTING CONDUITS, WIRES, BOXES, FITTINGS, FIXTURES OR OTHER ELECTRICAL EQUIPMENT WHICH INTERFERES WITH PLANNED REMODEL WORK. PROVIDE CIRCUIT CONTINUATION REQUIRED FOR ALL EXISTING OUTLETS, FIXTURES, EQUIPMENT, ETC. SCHEDULED TO REMAIN.
4. NOTIFY THE ENGINEER IMMEDIATELY WHEREVER EXISTING EQUIPMENT IS ENCOUNTERED WHICH MUST BE RELOCATED DUE TO THE NEW CONSTRUCTION, OR NOT INDICATED ON "AS-BUILT" DRAWINGS OR WAS BURIED UNDERGROUND OR EMBEDDED IN STRUCTURE WALLS.
5. CAREFULLY PROTECT ALL WALLS, TRIM, FLOORS, EQUIPMENT, UTILITY LINES AND MATERIALS. WHEN WORKING ON FINISHED SURFACES, LIMIT DAMAGE TO THE SMALLER AREA IF POSSIBLE AND RESTORE TO THE ORIGINAL CONDITION ALL SURFACES WHICH ARE DAMAGED BECAUSE OF THE INSTALLATION OF THIS WORK.
6. EQUIPMENT, MATERIALS AND SUPPLIES TEMPORARILY REMOVED FOR PROTECTION SHALL BE REPLACED IN ORIGINAL LOCATIONS. ANY MATERIALS DAMAGED SHALL BE REPLACED WITH NEW MATERIALS OF LIKE KIND AND QUALITY.
7. DEMOLITION WORK SHALL BE DONE IN A MANNER WHICH WILL NOT CAUSE UNNECESSARY INCONVENIENCE OR DANGER TO USERS OF THE PREMISES AND ADJACENT SITE, AND NOT INTERFERE WITH ITS OPERATION. ANY DEMOLITION WORK TO BE PERFORMED MUST BE PLANNED IN ADVANCE.
8. DO ALL DRILLING, CUTTING, ETC. REQUIRED TO DEMOLISH ELECTRICAL WORK AS INDICATED OR PROVIDE BLANK COVER PLATE ON ALL OUTLETS EXPOSED BY REMOVAL OF FIXTURE OF DEVICES.
9. RESEAL ALL PENETRATIONS OR OPENING THROUGH WALLS, CEILING, FLOORS, ETC., TO MAINTAIN THE RATING OF STRUCTURE.
10. ALL REMOVED MATERIALS AND EQUIPMENT WHICH ARE SALVAGED MATERIALS SHALL REMAIN IN THE PROPERTY OF THE OWNER. DELIVER SUCH SALVAGED MATERIALS AND EQUIPMENT ON THE PREMISES AS DIRECTED BY OWNER AND NEATLY PILE OR STORE AND PROTECT FROM DAMAGE. DISPOSE OF ALL HAZARDOUS MATERIAL PER FEDERAL, STATE AND LOCAL REGULATIONS AND OTHER AGENCIES HAVING JURISDICTION.
11. CONTRACTOR SHALL FIELD VERIFY EXISTING CONDUIT/WIRING RUNS. REUSE AS REQUIRED AND REMOVE ALL UNUSED CONDUIT/WIRING. UNUSED CONDUIT IN INACCESSIBLE LOCATIONS (WALLS TO REMAIN) CAN BE ABANDONED IN PLACE. REMOVE UNUSED WIRING. TO INCLUDE ABANDONED TELEPHONE, DATA AND OTHER LOW VOLTAGE SYSTEMS CABLING AFTER CONFIRMING WITH THE OWNER'S PROJECT MANAGER THAT CABLING IS ABANDONED AND WILL NOT BE RE-USED.
12. CONTRACTOR TO VERIFY CIRCUIT NUMBER AND LOADS FOR ALL EXISTING EQUIPMENT PRIOR TO INSTALLATION OF NEW OR RELOCATED ELECTRICAL EQUIPMENT. REASSIGN CIRCUITS AND LOADS ACCORDINGLY. PROVIDE COMPLETE "AS BUILT" DRAWINGS AND TYPEWRITTEN DIRECTORIES FOR PANELS.
13. WHERE NECESSARY TO SHUT OFF UTILITY SERVICES OR CAUSE INTERRUPTION TO POWER OR SIGNAL SYSTEMS WHILE A BUILDING IS OCCUPIED OR THAT EFFECT ADJACENT BUILDINGS, SCHEDULE OUTAGES OR INTERRUPTIONS WITH THE OWNER, BUILDING OCCUPANTS AND/OR ADJACENT BUILDING OWNER(S) AND OCCUPANTS PRIOR TO CONDUCTING OUTAGE(S) OR INTERRUPTIONS.

SITE PLAN GENERAL NOTES:

1. CONTRACTOR SHALL EXERCISE EXTREME CAUTION IN EXCAVATING AND TRENCHING ON THIS SITE TO AVOID EXISTING DUCTS, PIPING OR CONDUITS, ETC., AND TO PREVENT HAZARDS TO PERSONNEL AND/OR DAMAGE TO EXISTING UNDERGROUND UTILITIES OR STRUCTURES WHETHER OR NOT SHOWN AND INSTALLED BY ANY OTHER CONTRACTS. THE ENGINEER IS NOT RESPONSIBLE FOR THE LOCATION OF UNDERGROUND UTILITIES OR STRUCTURES WHETHER OR NOT SHOWN OR DETAILED AND INSTALLED BY ANY OTHER CONTRACTS. THE CONTRACTOR SHALL IMMEDIATELY NOTIFY THE ENGINEER SHOULD SUCH UNIDENTIFIED CONDITIONS BE DISCOVERED. THESE DRAWINGS AND SPECIFICATIONS DO NOT INCLUDE THE NECESSARY ELEMENTS FOR CONSTRUCTION SAFETY.
2. CALL UNDERGROUND SERVICE ALERT (USA) AT 1 (800) 422-4133 OR APPLICABLE STATE AND LOCAL DIG SAFE OR UNDERGROUND ALERT HOTLINES PRIOR TO CONSTRUCTION START.
3. MINIMUM CONDUIT SIZE SHALL BE 3/4" - U.O.N.
4. MINIMUM CONDUCTOR SIZE SHALL BE #10 AWG. - U.O.N.
5. ALL SITE BRANCH CIRCUITS SHALL INCLUDE A NEC SIZED EQUIPMENT GROUND CONDUCTOR.
6. ALL ELECTRICAL EQUIPMENT MOUNTED OUTDOORS SHALL BE WEATHERPROOF (NEMA #3R).
7. ALL CONDUIT ONLY SHALL BE PROVIDED WITH A NYLON PULL STRING.
8. SEE ARCHITECTURAL/LANDSCAPE ARCHITECTURAL PLANS FOR EXACT LOCATIONS OF FIXTURES, PULLBOXES, MANHOLES, OTHER ELECTRICAL DEVICES, ETC. COORDINATE ALL UNDERGROUND STRUCTURES AND CONDUIT ROUTING WITH LANDSCAPE ARCHITECT PRIOR TO ROUGH-IN TO ENSURE THAT SUCH ITEMS ARE NOT PLACED IN CRITICAL LANDSCAPE PLANTING/HARDSCAPE AREAS.
9. UNLESS SPECIFICALLY SHOWN AS (E), (R), (ER), (D), EXISTING OR NON-BOLD, ALL ELECTRICAL DEVICES SHOWN ARE NEW.
10. PRIOR TO ANY EXCAVATION THE CONTRACTOR SHALL LOCATE AND VERIFY ALL UNDERGROUND UTILITIES BY SCANNING AND POTHOLING AND/OR WHATEVER MEANS NECESSARY.

SITE CIRCUITING:

- --/// -- = 1"C.4#6 & 1#6 GND.
- --#-- = 3/4"C. 3#6 & 1#6 GND.
- ------ = 3/4"C. 2#6 & 1#6 GND.

PLAN NOTES:

1. EXISTING TO BE REMOVED ALONG WITH ASSOCIATED CONDUIT AND WIRE AND REPLACED WITH NEW.
2. EXISTING PULLBOX.
3. EXISTING PARKING LOT LIGHTING CIRCUITS TO BE REMOVED.
4. EXISTING PARKING LOT LIGHTING CIRCUITS TO REMAIN.
5. CONTRACTOR SHALL SPLICE NEW CONDUCTORS TO EXISTING AS REQUIRED TO MAINTAIN EXISTING CIRCUITRY.
6. SEE CENTRAL PLANT PROJECT SHEET E-103 AND E-801 FOR PANEL EBH LOCATION.

architecture
westbergwhite
14471 CHAMBERS RD, SUITE 210
TUSTIN, CA 92780
(714) 508-1790 508-1790 FAX
1775 HANCOCK ST, SUITE 120
SAN DIEGO, CA 92110
(619) 542-1188 88 542-1663 FAX
719 S. McCLELAND STREET
SANTA MARIA, CA 93454
(805) 346-2991 346-8790 FAX

CONSULTANT:
tk1sc
COLLABORATIVE
15231 Laguna Canyon Road, Suite 100
Irvine, California 92618
949.751.5800 www.tk1sc.com
Jerry Leonhardt
tk1sc Job #: 2013-0538

PROJECT NAME:

Santa Ana College
Quad and Infrastructure Renovation
1530 West 17th Street
Santa Ana, California 92706

CLIENT:
Rancho Santiago Community College District
2323 North Broadway
Santa Ana, CA 92706

No.	Rev. Date	Description
4	06/16/2015	ADDENDUM 04
5	06/25/2015	ADDENDUM 05

JOB NO: 13022.02
DATE: 03/06/2015
DRAWN: MM / RR / RB
CHECK: JG / MM
ARCHITECT: PDW
ENGINEER:
ARCHITECT:

CONSULTANT:
REGISTERED PROFESSIONAL ENGINEER RAYMOND W. GRUNEW No. E15610 ELECTRICAL STATE OF CALIFORNIA

STATE:
IDENTIFICATION STAMP
DIV. OF THE STATE ARCHITECT
OFFICE OF REGULATION SERVICES
APP NO: 04-113798
FILE NO: 30-C2
AC. FLS SS
DATE

SHEET DESCRIPTION:
ENLARGED SITE LIGHTING AND POWER PLAN

SHEET NO:
E-305

C:\PROJECTS\WSC\SHSC01\EXST_SYS 12/19/95 11:15

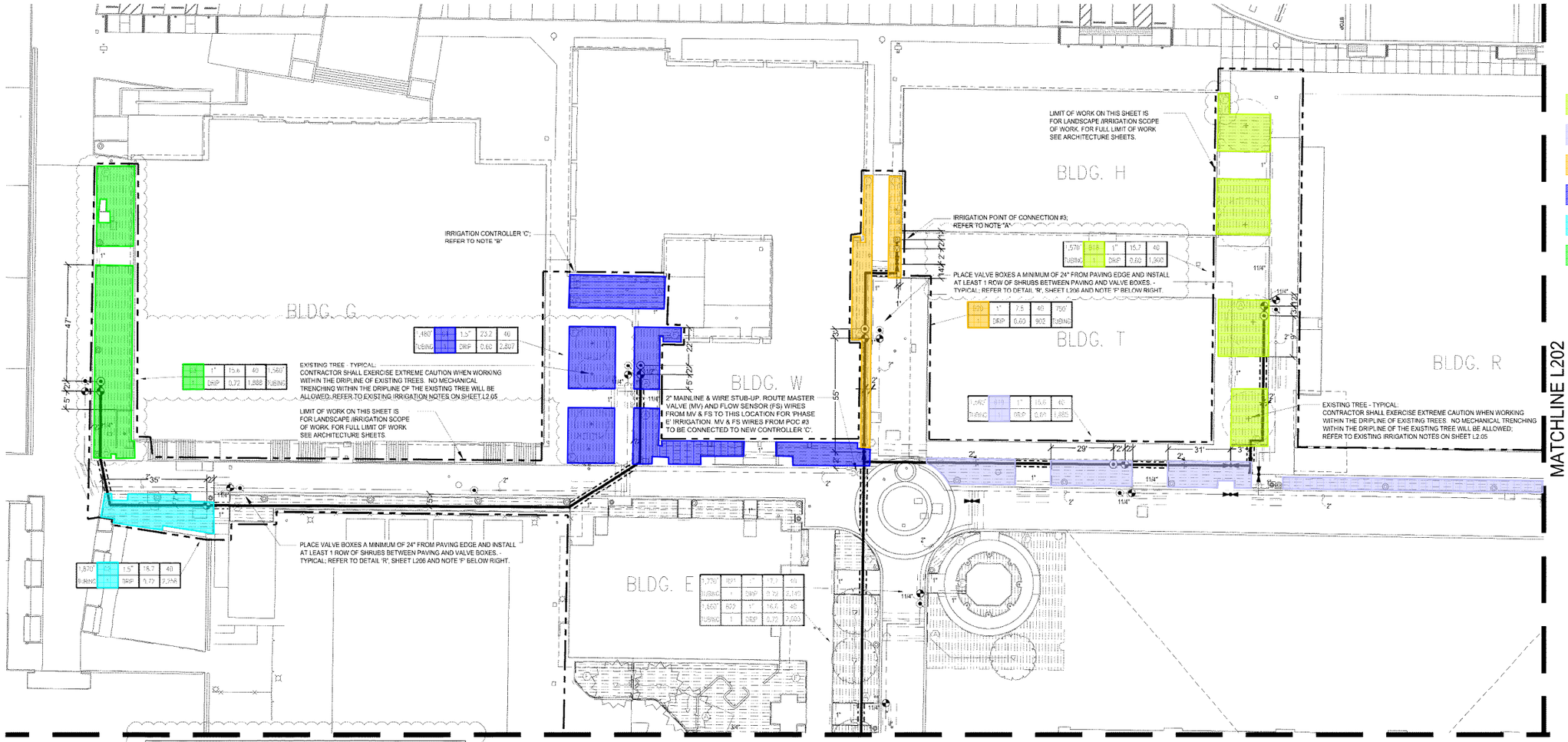

- Valve B18 Drip
- Valve B19 Drip
- Valve B20 Drip
- Valve C1 Drip
- Valve C2 Drip
- Valve C3 Drip

WATER EFFICIENT LANDSCAPE WORKSHEET

This worksheet is filled out by the project applicant and it is a required element of the Landscape Documentation Package

Project Name: SANTA ANA COLLEGE PHASE 5

Project Address: SANTA ANA, CALIFORNIA
POC - C

sweeney + associates

Reference Evapotranspiration (ETo) 48.3 In./Yr. **Residential Project?** No

Hydrozone # / Planting Description*	Plant Factor	Irrigation Method*	Irrigation Efficiency (IE)*	ETAF (PF / IE)	Landscape Area (Sq. Ft.)	ETAF x Area	Estimated Total Water Use (ETWU)*
Regular Landscape Areas							
1. Low Water Use Plantings	0.20	Drip	0.81	0.25	5,953	1,488	44,567
			0.75	0.00	0	0	0
			0.75	0.00	0	0	0
			0.75	0.00	0	0	0
	0.80	Direct Fill	1.00	0.80	0	0	0
				Totals:	5,953	1,488	
Special Landscape Areas							
1. Picnic Area				1.00	0	0	0
2. Active Turf				1.00	0	0	0
3. Vegetable Garden				1.00	0	0	0
				Totals:	0	0	
				Estimated Total Water Use (ETWU) Total:			44,567
				Maximum Applied Water Allowance (MAWA)*:			80,221

* Hydrozone # / Planting Description	* Irrigation Method	* Irrigation Efficiency
E.g.	Overhead Spray or	0.75 for Spray
1.) Front Lawn	Drip	0.81 for Drip
2.) Low Water Use Plantings		
3.) Medium Water Use Plantings		

***ETWU (Annual Gallons Required)** = ETo x 0.62 x ETAF x Area*
Where 0.62 is a conversion factor that converts acre-inches/acre/year to gallons/square foot/year.

***MAWA (Annual Gallons Allowed)** = ETo x 0.62 x [(ETAF x LA) + ((1 - ETAF) x SLA)]*
Where 0.62 is a conversion factor that converts acre-inches/acre/year to gallons/square foot/year, LA is the total landscape area in square feet, SLA is the total special landscape area in square feet, and ETAF is 0.55 for residential projects and 0.45 for non-residential projects.

Evapotranspiration Adjustment Factor (ETAF) Calculations

This non-residential project complies with the WELO and its average ETAF is less than 0.45

Regular Landscape Areas	
Total ETAF x Area	1,488
Total Area	5,953
Average ETAF	**0.25**

All Landscape Areas	
Total ETAF x Area	1,488
Total Area	5,953
Average ETAF	**0.25**

WATER PRESSURE LOSS CALCULATIONS

WATER METER NUMBER	1	WATER METER SIZE: (inches)	
HYDRAULIC GRADE LINE (FT)		WATER METER ELEVATION (FT)	
ELEVATION DIFFERENCE (FT)		STATIC PRESSURE (PSI)	70.0
REMOTE CONTROL VALVE #	C2	REMOTE CONTROL VALVE SIZE (in.)	1.00
R.C.V. DEMAND (GPM)	23.2	TOTAL DEMAND (GPM)	23.2
HIGHEST HEAD SERVED (FT)		STATIC PRESSURE AT HIGHEST HEAD	

sweeney + associates

PRESSURE LOSS CALCULATION IS PROVIDED FOR THIS PROJECT BY SWEENEY & ASSOCIATES, INC. UNAUTHORIZED USE BY ANY OTHER PERSON, COMPANY OR PROJECT IS FORBIDDEN WITHOUT WRITTEN PERMISSION.

SIZE (Inches)	DESCRIPTION	FLOW	#	LOSS	
	SERVICE LINE (50 FT OF TYPE K COPPER)	23.2	1	0.00	PSI
	WATER METER (XXXX TYPE)	23.2	2	0.00	PSI
	BACKFLOW PREVENTER (R/P TYPE)	23.2	3	0.00	PSI
	FILTRATION (WYE FILTER)	23.2	4	0.00	PSI
	PRESSURE REGULATOR (WILKINS 500HLR)	23.2	5	0.00	PSI
	BFD ASSEMBLY PIPING (BRASS W/ 4 ELLS)	23.2	6	0.00	PSI
1.50	MASTER CONTROL VALVE	23.2	7	0.45	PSI
1.00	FLOW SENSOR	23.2	8	1.00	PSI
2.00	ISOLATION VALVES (BALL TYPE)	23.2	9	1.00	PSI
2.00	100 FEET OF MAINLINE, CL 315 PVC	23.2	10	0.04	PSI
	X,XXX FEET OF MAINLINE, CL 315 PVC	23.2	11	0.00	PSI
	X,XXX FEET OF MAINLINE, CL 315 PVC	23.2	12	0.00	PSI
2.00	2 - 90 DEGREE ELBOWS	23.2	13	0.01	PSI
1.00	REMOTE CONTROL VALVE ASSEMBLY	23.2	14	4.90	PSI
10%	LATERAL LINE LOSSES	23.2	15	4.90	PSI
20%	FITTING LOSS (IN ADDITION TO ELBOWS SHOWN)	N/A	16	0.01	PSI
0.00	ELEVATION CHANGE (P.O.C. TO HIGHEST HEAD)	N/A	17	0.00	PSI
TOTAL SYSTEM PRESSURE LOSS (SUM OF #1 THRU #17)			18	10.5	PSI
PRESSURE REQUIRED AT HEAD (OPERATING PRESSURE)			19	40.0	PSI
TOTAL PRESSURE REQUIRED (SUM OF #18 AND #19)			20	50.5	PSI
MINIMUM STATIC WATER PRESSURE (FROM ABOVE)			21	70.0	PSI
RESIDUAL PRESSURE (SUBTRACT #20 FROM #21)			22	19.5	PSI
SET PRV OR MCV AT (#20 PLUS 10 PSI)			23	60.5	PSI
PRESSURE BOOST, IF REQUIRED (SET TO ACHIEVE 20 PSI RESIDUAL)			24	N/A	PSI

IRRIGATION CONTROLLER RUN TIMES

POC or Controller		JAN	FEB	MAR	APR	MAY	JUN	JUL	AUG	SEP	OCT	NOV	DEC	Total / Avg.
C	ETo / Month (Inches):	2.20	2.70	3.70	4.50	4.60	5.40	6.20	6.10	4.70	3.70	2.50	2.00	48.30
	ETo / Day (Inches):	0.07	0.10	0.12	0.15	0.15	0.18	0.20	0.20	0.16	0.12	0.08	0.06	0.13
	Irrigation Days / Week:	1	1	1	1	1	1	1	1	1	1	1	1	

Plant / Irrig. Type	AKc	Pr Rate	IE	JAN	FEB	MAR	APR	MAY	JUN	JUL	AUG	SEP	OCT	NOV	DEC	
Shrubs	0.20	0.72	0.81	10.2	13.9	17.2	21.6	21.4	25.9	28.8	28.3	22.6	17.2	12.0	9.3	Min./Day/Zone
Drip Tubing	Number of Zones:		3	30.7	41.7	51.6	64.8	64.1	77.8	86.4	85.0	67.7	51.6	36.0	27.9	Total Min./Day
	Total Number of Zones:		3	31	42	52	65	64	78	86	85	68	52	36	28	Total Min./Day
	Total Controller Run Time in Hours:			0.51	0.69	0.86	1.08	1.07	1.30	1.44	1.42	1.13	0.86	0.60	0.46	Total Hrs./Day
				JAN	FEB	MAR	APR	MAY	JUN	JUL	AUG	SEP	OCT	NOV	DEC	

Note: These schedules are intended only for compliance with local municipal codes and the water efficient landscape ordinance. These calculations represent the MAXIMUM REASONABLE run times and are used to ensure that all irrigation may be completed during the specific watering window allowed. These schedules da not include rainfall, site soil types, specicic exposures (shade verses sun), actual irrigation days, or specific slope position. It is solely the responsibility of the irrigation contractor to program the controller as required to apply the correct amount of irrigation water for the landscape. All smart controllers shall be programmed using the specified ET or weather sensing equipment, satellite provided ET data, soil moisture sensors, and rain shut off devices as required. Contractor shall provide a controller schedule inside the controller cabinet prior to final turnover of the project to the owner.

I HAVE COMPLIED WITH THE CRITERIA OF THE IRRIGATION GUIDELINES AND APPLIED THEM ACCORDINGLY FOR THE EFFICIENT USE OF WATER IN THE IRRIGATION DESIGN PLAN

sweeney + associates
IRRIGATION DESIGN AND CONSULTING

PIERRE LANDSCAPE
5455 2nd Street, Irwindale, CA 91706
Tel No (626) 587-2121 Fax No (626) 513-2220
www.pierrelandscape.com

NOTE A.
POINT OF CONNECTION #3 SHALL BE A CONNECTION DOWNSTREAM OF THE EXISTING 1½" BACKFLOW PREVENTION DEVICE. VERIFY THE ACTUAL LOCATION, SIZE AND WATER PRESSURE IN THE FIELD PRIOR TO STARTING WORK. IF ANY OF THE POC INFORMATION SHOWN ON THESE DRAWING IS FOUND TO BE DIFFERENT THAN THE ACTUAL POC INFORMATION GATHERED IN THE FIELD, IMMEDIATELY NOTIFY THE LANDSCAPE ARCHITECT AND IRRIGATION CONSULTANT. SHOULD THE CONTRACTOR FAIL TO VERIFY THE POC INFORMATION ANY CHANGES REQUIRED BY LOW PRESSURE OR VOLUME SHALL BE THE SOLE RESPONSIBILITY OF THE CONTRACTOR.

STATIC WATER PRESSURE	70.0 PSI
DESIGN WATER PRESSURE	50.5 PSI
MAXIMUM SYSTEM DEMAND	23.2 GPM
RESIDUAL WATER PRESSURE	19.5 PSI

NOTE B:
CONTROLLER 'C' SHALL BE A NEW CALSENSE 24 STATION CONTROLLER. INSTALLED IN A STAINLESS STEEL ENCLOSURE (SEE LEGEND FOR COMPLETE MODEL NUMBER AND TYPE). FINAL LOCATION OF CONTROLLER AND ELECTRICAL POC SHALL BE CONFIRMED WITH OWNER'S AUTHORIZED REPRESENTATIVE PRIOR TO STARTING WORK.

NOTE C:
MAINLINE AND RELATED EQUIPMENT SHOWN WITHIN PAVING FOR CLARITY ONLY, ACTUAL MAINLINE AND RELATED EQUIPMENT LOCATION TO BE WITHIN PLANTERS AND A MINIMUM OF 18" OFF ADJACENT HARDSCAPE AND OTHER OBSTACLES TYP.

NOTE D:
CONTRACTOR SHALL ADJUST ALL HEADS AS REQUIRED TO ACCOMMODATE ANY VERTICAL OBSTRUCTIONS THAT MAY OCCUR, INCLUDING BUT NOT LIMITED TO LIGHT POLES, FIRE HYDRANTS, ETC. VERIFY ALL HEAD LAYOUT WITH OWNER'S AUTHORIZED REPRESENTATIVE PRIOR TO STARTING WORK.

NOTE E:
BUBBLERS AND LATERAL LINES ARE SHOWN WITHIN PAVING FOR CLARITY ONLY, ACTUAL LOCATION TO BE WITHIN PLANTER. BUBBLERS SHALL BE ALIGNED WITH TREES AND AS DIRECTED BY OWNER'S AUTHORIZED REPRESENTATIVE. CONFIRM ALL LAYOUT IN FIELD WITH OWNER'S AUTHORIZED REPRESENTATIVE PRIOR TO STARTING WORK.

NOTE F:
PLANTING LAYOUT TAKES PRIORITY OVER IRRIGATION EQUIPMENT LOCATIONS. DO NOT AFFECT HEDGE ROW; REFER TO PLANTING PLAN.

0' 10' 20' 40'
SCALE: 1" = 20'-0"

NORTH

architecture
westbergwhite

14471 CHAMBERS RD, SUITE 210
TUSTIN, CA 92780
(714) 508-1780 508-1790 FAX

1775 HANCOCK ST, SUITE 120
SAN DIEGO, CA 92110
(619) 542-1188 542-1663 FAX

719 S. McCLELLAND STREET
SANTA MARIA, CA 93454
(805) 346-2991 346-8790 FAX

CONSULTANT:
SWA — Laguna Beach, Dallas, Houston, Los Angeles, San Francisco, Sausalito, Shanghai

570 Glenneyre Street
Laguna Beach
CA 92651-2453
Fax 949.497.5471
Ph 949.497.7861

www.swagroup.com

PROJECT NAME:

Santa Ana College
Quad and Infrastructure Renovation
1530 West 17th Street
Santa Ana, California 92706

CLIENT:
Rancho Santiago Community College District
2323 North Broadway
Santa Ana, CA 92706

NO.	Rev. Date	Description

JOB NO: WBWS401
DATE: 03/06/2015
DRAWN: SR
CHECK: SR/DG
ARCHITECT: PDW
ENGINEER:
ARCHITECT:

CONSULTANT:

STATE:
IDENTIFICATION STAMP
DIV. OF THE STATE ARCHITECT
OFFICE OF REGULATION SERVICES
APP# 04-113798
NO: 30-C2
AC FLS SS
DATE

SHEET DESCRIPTION:
IRRIGATION PLAN

SHEET NO:
L201
Bulletin 13.1

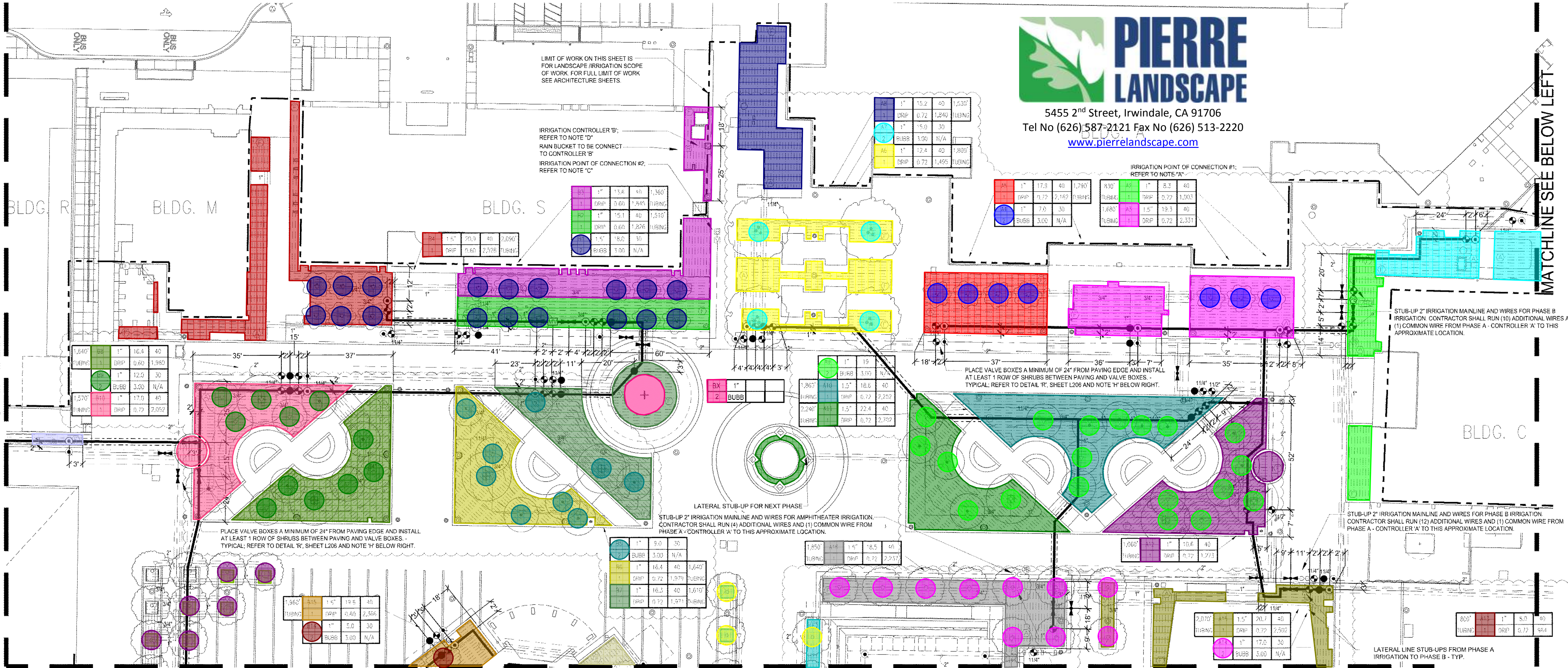

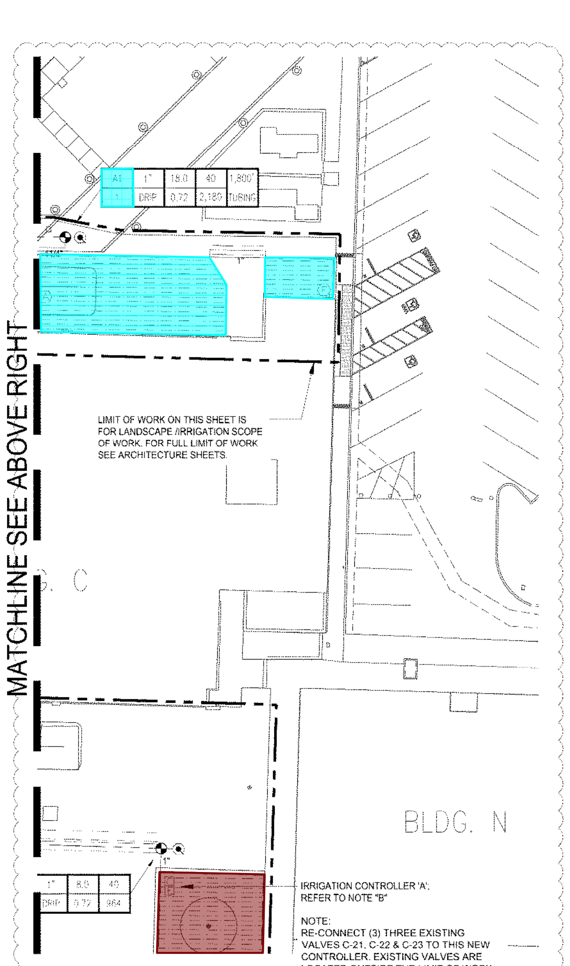

PIERRE LANDSCAPE
5455 2nd Street, Irwindale, CA 91706
Tel No (626) 587-2121 Fax No (626) 513-2220
www.pierrelandscape.com

- Valve A1 Drip
- Valve A2 Drip
- Valve A3 Drip
- Valve A4 Bubbler
- Valve A5 Drip
- Valve A6 Drip
- Valve A7 Bubbler
- Valve A8 Drip
- Valve A9 Bubbler
- Valve A10 Drip
- Valve A11 Drip
- Valve A12 Drip
- Valve A13 Drip
- Valve A14 Bubbler
- Valve A15 Drip
- Valve A16 Drip
- Valve A18 Bubbler
- Valve A19 Drip
- Valve B1 Bubbler
- Valve B2 Drip
- Valve B3 Drip
- Valve B4 Drip
- Valve B5 Bubbler
- Valve B6 Drip
- Valve B7 Drip
- Valve B8 Drip
- Valve B9 Bubbler
- Valve B10 Drip
- Valve B11 Drip
- Valve B12 Bubbler
- Valve B14 Bubbler
- Valve B15 Drip
- Valve B17 Drip
- Valve B19 Drip
- Valve BX Bubbler

WATER PRESSURE LOSS CALCULATIONS

WATER METER NUMBER	1	WATER METER SIZE (Inches)	
HYDRAULIC GRADE LINE (FT)		WATER METER ELEVATION (FT)	
ELEVATION DIFFERENCE (FT)		STATIC PRESSURE (PSI)	70.0
REMOTE CONTROL VALVE #	A11	REMOTE CONTROL VALVE SIZE (In.)	1.50
R.C.V. DEMAND (GPM)	22.4	TOTAL DEMAND (GPM)	22.4
HIGHEST HEAD SERVED (FT)		STATIC PRESSURE AT HIGHEST HEAD	

sweeney + associates — PRESSURE LOSS CALCULATION IS PROVIDED FOR THIS PROJECT BY SWEENEY & ASSOCIATES, INC. UNAUTHORIZED USE BY ANY OTHER PERSON, COMPANY OR PROJECT IS FORBIDDEN WITHOUT WRITTEN PERMISSION.

SIZE (inches)	DESCRIPTION	FLOW	#	LOSS	
	SERVICE LINE (50 FT OF TYPE K COPPER)	22.4	1	0.00	PSI
	WATER METER (XXXX TYPE)	22.4	2	0.00	PSI
	BACKFLOW PREVENTER (R/P TYPE)	22.4	3	0.00	PSI
	FILTRATION (WYE FILTER)	22.4	4	0.00	PSI
	PRESSURE REGULATOR (WILKINS 500HLR)	22.4	5	0.00	PSI
	BFD ASSEMBLY PIPING (BRASS W/ 4 ELLS)	22.4	6	0.00	PSI
1.50	MASTER CONTROL VALVE	22.4	7	0.62	PSI
1.00	FLOW SENSOR	22.4	8	1.00	PSI
2.00	ISOLATION VALVES (BALL TYPE)	22.4	9	1.00	PSI
2.00	145 FEET OF MAINLINE: CL. 315 PVC	22.4	10	0.70	PSI
	X,XXX FEET OF MAINLINE: CL. 315 PVC	22.4	11	0.00	PSI
	X,XXX FEET OF MAINLINE: CL. 315 PVC	22.4	12	0.00	PSI
2.00	2 - 90 DEGREE ELBOWS	22.4	13	0.16	PSI
1.50	REMOTE CONTROL VALVE ASSEMBLY	22.4	14	1.50	PSI
10%	LATERAL LINE LOSSES	22.4	15	4.00	PSI
20%	FITTING LOSS (IN ADDITION TO ELBOWS SHOWN)	N/A	16	0.14	PSI
0.00	ELEVATION CHANGE (P.O.C. TO HIGHEST HEAD)	N/A	17	0.00	PSI
	TOTAL SYSTEM PRESSURE LOSS (SUM OF #1 THRU #17)		18	9.1	PSI
	PRESSURE REQUIRED AT HEAD (OPERATING PRESSURE)		19	40.0	PSI
	TOTAL PRESSURE REQUIRED (SUM OF #18 AND #19)		20	49.1	PSI
	MINIMUM STATIC WATER PRESSURE (FROM ABOVE)		21	70.0	PSI
	RESIDUAL PRESSURE (SUBTRACT #20 FROM #21)		22	20.9	PSI
	SET PRV OR MCV AT (#20 PLUS 10 PSI)		23	59.1	PSI
	PRESSURE BOOST, IF REQUIRED (SET TO ACHIEVE 20 PSI RESIDUAL)		24	N/A	PSI

IRRIGATION CONTROLLER RUN TIMES

POC or Controller: **A**

				JAN	FEB	MAR	APR	MAY	JUN	JUL	AUG	SEP	OCT	NOV	DEC	Total / Avg.
ETo / Month (inches):				2.20	2.70	3.70	4.50	4.60	5.40	6.20	6.10	4.70	3.70	2.50	2.00	48.30
ETo / Day (inches):				0.07	0.10	0.12	0.15	0.15	0.18	0.20	0.20	0.16	0.12	0.08	0.06	0.13
Irrigation Days / Week:				1	1	1	1	1	1	1	1	1	1	1	1	
Plant / Irrig. Type	AKc	Pr Rate	IE	JAN	FEB	MAR	APR	MAY	JUN	JUL	AUG	SEP	OCT	NOV	DEC	
Shrubs	0.20	0.72	0.81	10.2	13.9	17.2	21.6	21.4	25.9	28.8	28.3	22.6	17.2	12.0	9.3	Min./Day/Zone
Drip Tubing	Number of Zones:		14	143.1	194.4	240.7	302.5	299.2	363.0	403.3	396.8	315.9	240.7	168.0	130.1	Total Min./Day
Trees	0.40	3.00	0.75	5.3	7.2	8.9	11.2	11.1	13.4	14.9	14.7	11.7	8.9	6.2	4.8	Min./Day/Zone
Bubblers	Number of Zones:		5	26.5	36.0	44.6	56.0	55.4	67.2	74.7	73.5	58.5	44.6	31.1	24.1	Total Min./Day
Total Number of Zones:			19	170	230	285	358	355	430	478	470	374	285	199	154	Total Min./Day
Total Controller Run Time in Hours:				2.83	3.84	4.75	5.97	5.91	7.17	7.97	7.84	6.24	4.75	3.32	2.57	Total Hrs./Day
				JAN	FEB	MAR	APR	MAY	JUN	JUL	AUG	SEP	OCT	NOV	DEC	

Note: These schedules are intended only for compliance with local municipal codes and the water efficient landscape ordinance. These calculations represent the MAXIMUM REASONABLE run times and are used to ensure that all irrigation may be completed during the specific watering window allowed. These schedules do not include rainfall, site soil types, specicic exposures (shade versus sun), actual irrigation days, or specific slope position. It is solely the responsibility of the irrigation contractor to program the controller as required to apply the correct amount of irrigation water for the landscape. All smart controllers shall be programmed using the specified ET or weather sensing equipment, satellite provided ET data, soil moisture sensors, and rain shut off devices as required. Contractor shall provide a controller schedule inside the controller cabinet prior to final turnover of the project to the owner.

WATER EFFICIENT LANDSCAPE WORKSHEET

This worksheet is filled out by the project applicant and it is a required element of the Landscape Documentation Package

Project Name: SANTA ANA COLLEGE PHASE 5
Project Address: SANTA ANA, CALIFORNIA
POC - A

sweeney + associates

Reference Evapotranspiration (ETo) 48.3 In./Yr. **Residential Project?** No

Hydrozone # / Planting Description[a]	Plant Factor	Irrigation Method[b]	Irrigation Efficiency (IE)[c]	ETAF (PF / IE)	Landscape Area (Sq. Ft.)	ETAF x Area	Estimated Total Water Use (ETWU)[d]
Regular Landscape Areas							
1. Low Water Use Plantings	0.20	Drip	0.81	0.25	25,891	6,473	193,833
			0.75	0.00	0	0	0
			0.75	0.00	0	0	0
			0.75	0.00	0	0	0
	0.80	Direct Fill	1.00	0.80	0	0	0
				Totals:	25,891	6,473	
Special Landscape Areas							
1. Picnic Area	[redacted]			1.00	0	0	0
2. Active Turf				1.00	0	0	0
3. Vegetable Garden				1.00	0	0	0
				Totals:	0	0	
					Estimated Total Water Use (ETWU) Total:		193,833
					Maximum Applied Water Allowance (MAWA)[e]:		348,899

[a] **Hydrozone # / Planting Description**
E.g.
1.) Front Lawn
2.) Low Water Use Plantings
3.) Medium Water Use Plantings

[b] **Irrigation Method**
Overhead Spray of
Drip

[c] **Irrigation Efficiency**
0.75 for Spray
0.81 for Drip

[d] ***ETWU (Annual Gallons Required)** = ETo x 0.62 x ETAF x Area*
Where 0.62 is a conversion factor that converts acre-inches/acre/year to gallons/square foot/year.

[e] ***MAWA (Annual Gallons Allowed)** = ETo x 0.62 x [(ETAF x LA) + ((1 - ETAF) x SLA)]*
Where 0.62 is a conversion factor that converts acre-inches/acre/year to gallons/square foot/year, LA is the total landscape area in square feet, SLA is the total special landscape area in square feet, and ETAF is 0.55 for residential projects and 0.45 for non-residential projects.

Evapotranspiration Adjustment Factor (ETAF) Calculations

This non-residential project complies with the WELO and its average ETAF is less than 0.45

Regular Landscape Areas	
Total ETAF x Area	6,473
Total Area	25,891
Average ETAF	0.25

All Landscape Areas	
Total ETAF x Area	6,473
Total Area	25,891
Average ETAF	0.25

I HAVE COMPLIED WITH THE CRITERIA OF THE IRRIGATION GUIDELINES AND APPLIED THEM ACCORDINGLY FOR THE EFFICIENT USE OF WATER IN THE IRRIGATION DESIGN PLAN

sweeney + associates
IRRIGATION DESIGN AND CONSULTING

NOTE A:
POINT OF CONNECTION #1 SHALL BE A CONNECTION DOWNSTREAM OF THE EXISTING 11/2" BACKFLOW PREVENTION DEVICE. VERIFY THE ACTUAL LOCATION, SIZE AND WATER PRESSURE IN THE FIELD PRIOR TO STARTING WORK. IF ANY OF THE POC INFORMATION SHOWN ON THESE DRAWING IS FOUND TO BE DIFFERENT THAN THE ACTUAL POC INFORMATION GATHERED IN THE FIELD, IMMEDIATELY NOTIFY THE LANDSCAPE ARCHITECT AND IRRIGATION CONSULTANT. SHOULD THE CONTRACTOR FAIL TO VERIFY THE POC INFORMATION ANY CHANGES REQUIRED BY LOW PRESSURE OR VOLUME SHALL BE THE SOLE RESPONSIBILITY OF THE CONTRACTOR.

STATIC WATER PRESSURE	70.0 PSI
DESIGN WATER PRESSURE	49.1 PSI
MAXIMUM SYSTEM DEMAND	22.4 GPM
RESIDUAL WATER PRESSURE	20.9 PSI

NOTE B:
REPLACE EXISTING CONTROLLER WITH NEW CONTROLLER 'A'. NEW CONTROLLER 'A' SHALL BE A NEW CALSENSE 48 STATION CONTROLLER INSTALLED IN A STAINLESS STEEL ENCLOSURE (SEE LEGEND FOR COMPLETE MODEL NUMBER AND TYPE). FINAL LOCATION OF CONTROLLER AND ELECTRICAL POC SHALL BE CONFIRMED WITH OWNER'S AUTHORIZED REPRESENTATIVE PRIOR TO STARTING WORK.

NOTE C:
POINT OF CONNECTION #2 SHALL BE A CONNECTION DOWNSTREAM OF THE EXISTING 11/2" BACKFLOW PREVENTION DEVICE. VERIFY THE ACTUAL LOCATION, SIZE AND WATER PRESSURE IN THE FIELD PRIOR TO STARTING WORK. IF ANY OF THE POC INFORMATION SHOWN ON THESE DRAWING IS FOUND TO BE DIFFERENT THAN THE ACTUAL POC INFORMATION GATHERED IN THE FIELD, IMMEDIATELY NOTIFY THE LANDSCAPE ARCHITECT AND IRRIGATION CONSULTANT. SHOULD THE CONTRACTOR FAIL TO VERIFY THE POC INFORMATION ANY CHANGES REQUIRED BY LOW PRESSURE OR VOLUME SHALL BE THE SOLE RESPONSIBILITY OF THE CONTRACTOR.

STATIC WATER PRESSURE	70.0 PSI
DESIGN WATER PRESSURE	52.8 PSI
MAXIMUM SYSTEM DEMAND	24.8 GPM
RESIDUAL WATER PRESSURE	17.2 PSI

NOTE D:
REPLACE EXISTING CONTROLLER WITH NEW CONTROLLER 'B'. NEW CONTROLLER 'B' SHALL BE A NEW CALSENSE 48 STATION CONTROLLER INSTALLED IN A STAINLESS STEEL ENCLOSURE (SEE LEGEND FOR COMPLETE MODEL NUMBER AND TYPE). FINAL LOCATION OF CONTROLLER AND ELECTRICAL POC SHALL BE CONFIRMED WITH OWNER'S AUTHORIZED REPRESENTATIVE PRIOR TO STARTING WORK.

NOTE E:
MAINLINE AND RELATED EQUIPMENT SHOWN WITHIN PAVING FOR CLARITY ONLY. ACTUAL MAINLINE AND RELATED EQUIPMENT LOCATION TO BE WITHIN PLANTERS AND A MINIMUM OF 18" OFF ADJACENT HARDSCAPE AND OTHER OBSTACLES TYP.

NOTE F:
CONTRACTOR SHALL ADJUST ALL HEADS AS REQUIRED TO ACCOMMODATE ANY VERTICAL OBSTRUCTIONS THAT MAY OCCUR, INCLUDING BUT NOT LIMITED TO LIGHT POLES, FIRE HYDRANTS, ETC. VERIFY ALL HEAD LAYOUT WITH OWNER'S AUTHORIZED REPRESENTATIVE PRIOR TO STARTING WORK.

NOTE G:
BUBBLERS AND LATERAL LINES ARE SHOWN WITHIN PAVING FOR CLARITY ONLY. ACTUAL LOCATION TO BE WITHIN PLANTER. BUBBLERS SHALL BE ALIGNED WITH TREES AND AS DIRECTED BY OWNER'S AUTHORIZED REPRESENTATIVE. CONFIRM ALL LAYOUT IN FIELD WITH OWNER'S AUTHORIZED REPRESENTATIVE PRIOR TO STARTING WORK.

NOTE H:
PLANTING LAYOUT TAKES PRIORITY OVER IRRIGATION EQUIPMENT LOCATIONS. DO NOT AFFECT HEDGE ROW; REFER TO PLANTING PLAN.

0' 10' 20' 40' SCALE: 1" = 20'-0" NORTH

architecture westbergwhite
14471 CHAMBERS RD, SUITE 210 TUSTIN, CA 92780 (714) 508-1780 508-1790 FAX
1775 HANCOCK ST, SUITE 120 SAN DIEGO, CA 92110 (619) 542-1188 542-1663 FAX
719 S. McCLELLAND STREET SANTA MARIA, CA 93454 (805) 346-2991 346-8790 FAX

CONSULTANT:
SWA — Laguna Beach, Dallas, Houston, Los Angeles, San Francisco, Sausalito, Shanghai
570 Glenneyre Street Laguna Beach CA 92651 2453
Fax 949 497 5471
Ph 949 497 7861
www.swagroup.com

PROJECT NAME:
Santa Ana College
Quad and Infrastructure Renovation
1530 West 17th Street
Santa Ana, California 92706

CLIENT:
Rancho Santiago Community College District
2323 North Broadway
Santa Ana, CA 92706

No. Rev. Date Description

JOB NO: WBWS401
DATE: 03/06/2015
DRAWN: SR
CHECK: SR/DG
ARCHITECT: PDW
ENGINEER:
ARCHITECT:

CONSULTANT: (stamp) 1/22/16

STATE:
IDENTIFICATION STAMP DIV. OF THE STATE ARCHITECT OFFICE OF REGULATION SERVICES
APP NO: 04-113798 30-C2
AC FLS SS
DATE

SHEET DESCRIPTION:
IRRIGATION PLAN

SHEET NO:
L202

Bulletin 13.1

MATCHLINE L201

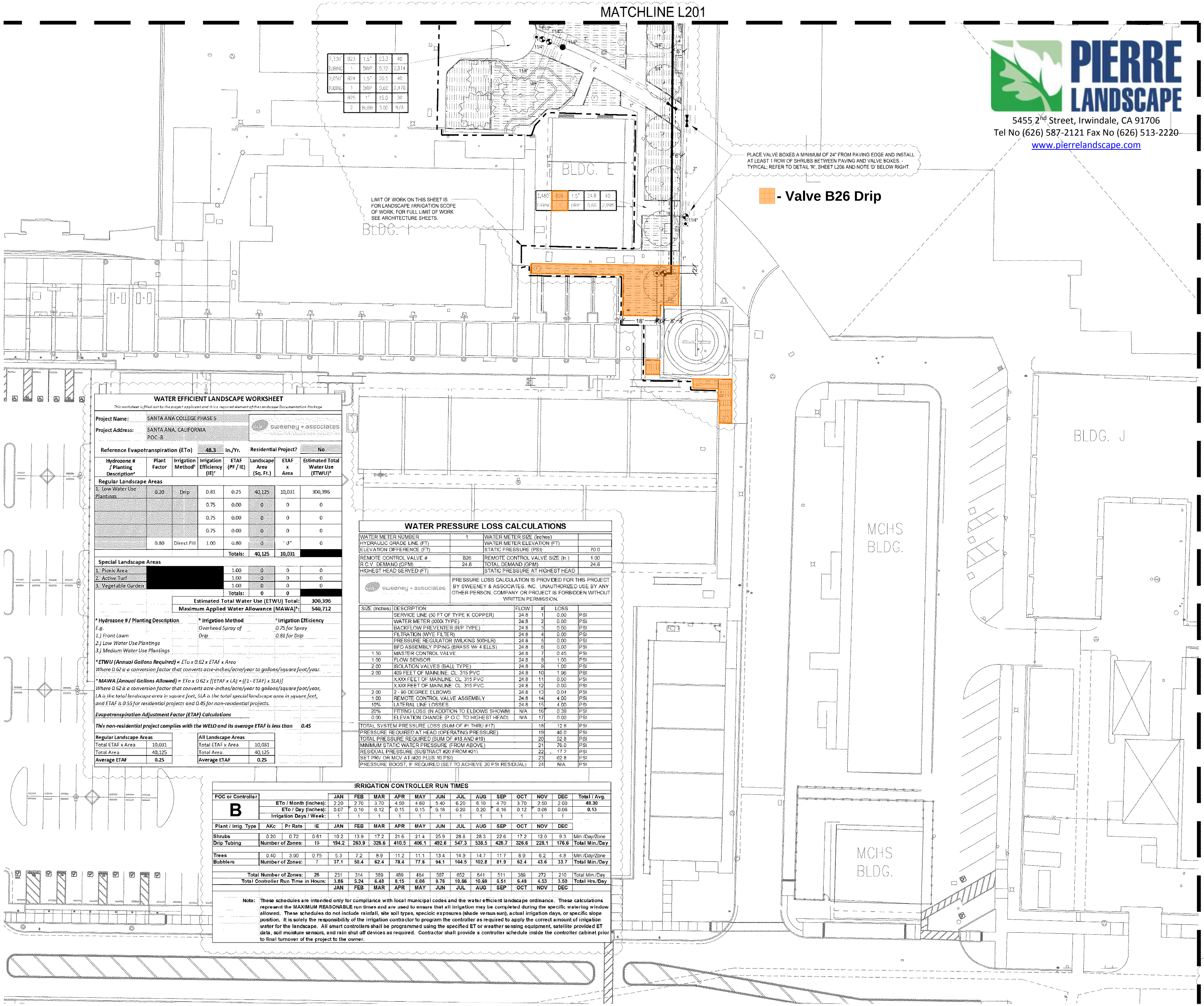

PIERRE LANDSCAPE
5455 2nd Street, Irwindale, CA 91706
Tel No (626) 587-2121 Fax No (626) 513-2220
www.pierrelandscape.com

WATER EFFICIENT LANDSCAPE WORKSHEET

This worksheet is filled out by the project applicant and it is a required element of the Landscape Documentation Package

Project Name: SANTA ANA COLLEGE PHASE 5
Project Address: SANTA ANA, CALIFORNIA POC-B
sweeney + associates

Reference Evapotranspiration (ETo) 48.3 In./Yr. Residential Project? No

Hydrozone # / Planting Description[a]	Plant Factor	Irrigation Method[b]	Irrigation Efficiency (IE)[c]	ETAF (PF / IE)	Landscape Area (Sq. Ft.)	ETAF x Area	Estimated Total Water Use (ETWU)[d]
Regular Landscape Areas							
1. Low Water Use Plantings	0.20	Drip	0.81	0.25	40,125	10,031	300,396
			0.75	0.00	0	0	0
			0.75	0.00	0	0	0
			0.75	0.00	0	0	0
	0.80	Direct Fill	1.00	0.80	0	0	0
				Totals:	40,125	10,031	
Special Landscape Areas							
1. Picnic Area	[redacted]			1.00	0	0	0
2. Active Turf				1.00	0	0	0
3. Vegetable Garden				1.00	0	0	0
				Totals:	0	0	
		Estimated Total Water Use (ETWU) Total:					300,396
		Maximum Applied Water Allowance (MAWA)[e]:					540,712

[a] **Hydrozone # / Planting Description** — *E.g. 1.) Front Lawn 2.) Low Water Use Plantings 3.) Medium Water Use Plantings*
[b] **Irrigation Method** — *Overhead Spray of Drip*
[c] **Irrigation Efficiency** — *0.75 for Spray 0.81 for Drip*

[d] ***ETWU (Annual Gallons Required)** = ETo x 0.62 x ETAF x Area*
Where 0.62 is a conversion factor that converts acre-inches/acre/year to gallons/square foot/year.

[e] ***MAWA (Annual Gallons Allowed)** = ETo x 0.62 x [(ETAF x LA) + ((1 - ETAF) x SLA)]*
Where 0.62 is a conversion factor that converts acre-inches/acre/year to gallons/square foot/year, LA is the total landscape area in square feet, SLA is the total special landscape area in square feet, and ETAF is 0.55 for residential projects and 0.45 for non-residential projects.

Evapotranspiration Adjustment Factor (ETAF) Calculations

This non-residential project complies with the WELO and its average ETAF is less than **0.45**

Regular Landscape Areas	
Total ETAF x Area	10,031
Total Area	40,125
Average ETAF	**0.25**

All Landscape Areas	
Total ETAF x Area	10,031
Total Area	40,125
Average ETAF	**0.25**

WATER PRESSURE LOSS CALCULATIONS

WATER METER NUMBER	1	WATER METER SIZE (Inches)	
HYDRAULIC GRADE LINE (FT)		WATER METER ELEVATION (FT)	
ELEVATION DIFFERENCE (FT)		STATIC PRESSURE (PSI)	70.0
REMOTE CONTROL VALVE #	B26	REMOTE CONTROL VALVE SIZE (In.)	1.00
R.C.V. DEMAND (GPM)	24.8	TOTAL DEMAND (GPM)	24.8
HIGHEST HEAD SERVED (FT)		STATIC PRESSURE AT HIGHEST HEAD	

sweeney + associates — PRESSURE LOSS CALCULATION IS PROVIDED FOR THIS PROJECT BY SWEENEY & ASSOCIATES, INC. UNAUTHORIZED USE BY ANY OTHER PERSON, COMPANY OR PROJECT IS FORBIDDEN WITHOUT WRITTEN PERMISSION.

SIZE (Inches)	DESCRIPTION	FLOW	#	LOSS	
	SERVICE LINE (50 FT OF TYPE K COPPER)	24.8	1	0.00	PSI
	WATER METER (XXXX TYPE)	24.8	2	0.00	PSI
	BACKFLOW PREVENTER (R/P TYPE)	24.8	3	0.00	PSI
	FILTRATION (WYE FILTER)	24.8	4	0.00	PSI
	PRESSURE REGULATOR (WILKINS 500HLR)	24.8	5	0.00	PSI
	BFD ASSEMBLY PIPING (BRASS W/ 4 ELLS)	24.8	6	0.00	PSI
1.50	MASTER CONTROL VALVE	24.8	7	0.45	PSI
1.00	FLOW SENSOR	24.8	8	1.00	PSI
2.00	ISOLATION VALVES (BALL TYPE)	24.8	9	1.00	PSI
2.00	409 FEET OF MAINLINE: CL. 315 PVC	24.8	10	1.96	PSI
	X,XXX FEET OF MAINLINE: CL. 315 PVC	24.8	11	0.00	PSI
	X,XXX FEET OF MAINLINE: CL. 315 PVC	24.8	12	0.00	PSI
2.00	2 - 90 DEGREE ELBOWS	24.8	13	0.04	PSI
1.00	REMOTE CONTROL VALVE ASSEMBLY	24.8	14	4.00	PSI
10%	LATERAL LINE LOSSES	24.8	15	4.00	PSI
20%	FITTING LOSS (IN ADDITION TO ELBOWS SHOWN)	N/A	16	0.39	PSI
0.00	ELEVATION CHANGE (P.O.C. TO HIGHEST HEAD)	N/A	17	0.00	PSI
	TOTAL SYSTEM PRESSURE LOSS (SUM OF #1 THRU #17)		18	12.8	PSI
	PRESSURE REQUIRED AT HEAD (OPERATING PRESSURE)		19	40.0	PSI
	TOTAL PRESSURE REQUIRED (SUM OF #18 AND #19)		20	52.8	PSI
	MINIMUM STATIC WATER PRESSURE (FROM ABOVE)		21	70.0	PSI
	RESIDUAL PRESSURE (SUBTRACT #20 FROM #21)		22	17.2	PSI
	SET PRV OR MCV AT (#20 PLUS 10 PSI)		23	62.8	PSI
	PRESSURE BOOST, IF REQUIRED (SET TO ACHIEVE 20 PSI RESIDUAL)		24	N/A	PSI

IRRIGATION CONTROLLER RUN TIMES

POC or Controller				JAN	FEB	MAR	APR	MAY	JUN	JUL	AUG	SEP	OCT	NOV	DEC	Total / Avg.
B	ETo / Month (Inches):			2.20	2.70	3.70	4.50	4.60	5.40	6.20	6.10	4.70	3.70	2.50	2.00	48.30
	ETo / Day (Inches):			0.07	0.10	0.12	0.15	0.15	0.18	0.20	0.20	0.16	0.12	0.08	0.06	0.13
	Irrigation Days / Week:			1	1	1	1	1	1	1	1	1	1	1	1	
Plant / Irrig. Type	AKc	Pr Rate	IE	JAN	FEB	MAR	APR	MAY	JUN	JUL	AUG	SEP	OCT	NOV	DEC	
Shrubs	0.20	0.72	0.81	10.2	13.9	17.2	21.6	21.4	25.9	28.8	28.3	22.6	17.2	12.0	9.3	Min./Day/Zone
Drip Tubing	Number of Zones:		19	194.2	263.9	326.6	410.5	406.1	492.6	547.3	538.5	428.7	326.6	228.1	176.6	Total Min./Day
Trees	0.40	3.00	0.75	5.3	7.2	8.9	11.2	11.1	13.4	14.9	14.7	11.7	8.9	6.2	4.8	Min./Day/Zone
Bubblers	Number of Zones:		7	37.1	50.4	62.4	78.4	77.6	94.1	104.5	102.8	81.9	62.4	43.6	33.7	Total Min./Day
Total Number of Zones:			26	231	314	389	489	484	587	652	641	511	389	272	210	Total Min./Day
Total Controller Run Time in Hours:				3.86	5.24	6.48	8.15	8.06	9.78	10.86	10.69	8.51	6.48	4.53	3.50	Total Hrs./Day
				JAN	FEB	MAR	APR	MAY	JUN	JUL	AUG	SEP	OCT	NOV	DEC	

Note: These schedules are intended only for compliance with local municipal codes and the water efficient landscape ordinance. These calculations represent the MAXIMUM REASONABLE run times and are used to ensure that all irrigation may be completed during the specific watering window allowed. These schedules do not include rainfall, site soil types, specioic exposures (shade versus sun), actual irrigation days, or specific slope position. It is solely the responsibility of the irrigation contractor to program the controller as required to apply the correct amount of irrigation water for the landscape. All smart controllers shall be programmed using the specified ET or weather sensing equipment, satellite provided ET data, soil moisture sensors, and rain shut off devices as required. Contractor shall provide a controller schedule inside the controller cabinet prior to final turnover of the project to the owner.

NOTE A:
MAINLINE AND RELATED EQUIPMENT SHOWN WITHIN PAVING FOR CLARITY ONLY, ACTUAL MAINLINE AND RELATED EQUIPMENT LOCATION TO BE WITHIN PLANTERS AND A MINIMUM OF 18" OFF ADJACENT HARDSCAPE AND OTHER OBSTACLES TYP.

NOTE B:
CONTRACTOR SHALL ADJUST ALL HEADS AS REQUIRED TO ACCOMMODATE ANY VERTICAL OBSTRUCTIONS THAT MAY OCCUR, INCLUDING BUT NOT LIMITED TO LIGHT POLES, FIRE HYDRANTS, ETC. VERIFY ALL HEAD LAYOUT WITH OWNER'S AUTHORIZED REPRESENTATIVE PRIOR TO STARTING WORK.

NOTE C:
BUBBLERS AND LATERAL LINES ARE SHOWN WITHIN PAVING FOR CLARITY ONLY, ACTUAL LOCATION TO BE WITHIN PLANTER. BUBBLERS SHALL BE ALIGNED WITH TREES AND AS DIRECTED BY OWNER'S AUTHORIZED REPRESENTATIVE. CONFIRM ALL LAYOUT IN FIELD WITH OWNER'S AUTHORIZED REPRESENTATIVE PRIOR TO STARTING WORK.

NOTE D:
PLANTING LAYOUT TAKES PRIORITY OVER IRRIGATION EQUIPMENT LOCATIONS. DO NOT AFFECT HEDGE ROW; REFER TO PLANTING PLAN.

I HAVE COMPLIED WITH THE CRITERIA OF THE IRRIGATION GUIDELINES AND APPLIED THEM ACCORDINGLY FOR THE EFFICIENT USE OF WATER IN THE IRRIGATION DESIGN PLAN

sweeney + associates
IRRIGATION DESIGN AND CONSULTING

0' 10' 20' 40'
SCALE: 1" = 20'-0"
NORTH

architecture westbergwhite
14471 CHAMBERS RD, SUITE 210
TUSTIN, CA 92780
(714) 508-1780 508-1790 FAX
1775 HANCOCK ST, SUITE 120
SAN DIEGO, CA 92110
(619) 542-1188 542-1663 FAX
719 S. McCLELLAND STREET
SANTA MARIA, CA 93454
(805) 346-2991 346-8790 FAX

CONSULTANT:
SWA — Laguna Beach, Dallas, Houston, Los Angeles, San Francisco, Sausalito, Shanghai
570 Glenneyre Street
Laguna Beach
CA 92651 2453
Fax 949.497.5471
Ph 949.497.7861
www.swagroup.com

PROJECT NAME:
Santa Ana College
Quad and Infrastructure Renovation
1530 West 17th Street
Santa Ana, California 92706

CLIENT:
Rancho Santiago Community College District
2323 North Broadway
Santa Ana, CA 92706

No. Rev. Date Description

JOB NO: WBWS401
DATE: 03/06/2015
DRAWN: SR
CHECK: SR/DG
ARCHITECT: PDW
ENGINEER:
ARCHITECT:

CONSULTANT:
(Stamp: Registered Landscape Architect, State of California; signed 1/22/16)

STATE:
IDENTIFICATION STAMP
DIV. OF THE STATE ARCHITECT
OFFICE OF REGULATION SERVICES
APP NO: 04-113798 30-C2
AC ___ FLS ___ SS ___
DATE ___

SHEET DESCRIPTION:
IRRIGATION PLAN

SHEET NO:
L203

MATCHLINE L202

MATCHLINE L203

BLDG. L

BLDG. D

PLACE VALVE BOXES A MINIMUM OF 24" FROM PAVING EDGE AND INSTALL AT LEAST 1 ROW OF SHRUBS BETWEEN PAVING AND VALVE BOXES - TYPICAL; REFER TO DETAIL 'R', SHEET L206 AND NOTE 'F' BELOW RIGHT.

LIMIT OF WORK ON THIS SHEET IS FOR LANDSCAPE IRRIGATION SCOPE OF WORK. FOR FULL LIMIT OF WORK SEE ARCHITECTURE SHEETS.

IRRIGATION CONTROLLER 'L'; REFER TO NOTE "B"

EXISTING VALVE L-3 TO REMAIN. RE-CONNECT TO NEW CALSENSE CONTROLLER 'L'

EXISTING VALVE L-4 TO REMAIN. RE-CONNECT TO NEW CALSENSE CONTROLLER 'L'

RE-CONNECT TO EXISTING MAINLINE FOR CONTINUED OPERATION OF EXISTING VALVES L-3 & L-4

IRRIGATION POINT OF CONNECTION #4; REFER TO NOTE "A"

EXISTING TREE - TYPICAL: CONTRACTOR SHALL EXERCISE EXTREME CAUTION WHEN WORKING WITHIN THE DRIPLINE OF EXISTING TREES. NO MECHANICAL TRENCHING WITHIN THE DRIPLINE OF THE EXISTING TREE WILL BE ALLOWED; REFER TO EXISTING IRRIGATION NOTES ON SHEET L2.05

PLACE VALVE BOXES A MINIMUM OF 24" FROM PAVING EDGE AND INSTALL AT LEAST 1 ROW OF SHRUBS BETWEEN PAVING AND VALVE BOXES - TYPICAL; REFER TO DETAIL 'R', SHEET L206 AND NOTE 'F' BELOW RIGHT.

RE-CONNECT TO EXISTING MAINLINE AND WIRES FOR CONTINUED USE OF (4) FOUR EXISTING PARKING LOT VALVES L-14, L-15, L-16 AND L-17

STUB-UP 2" IRRIGATION MAINLINE AND WIRES FOR AMPHITHEATER IRRIGATION. CONTRACTOR SHALL RUN (2) ADDITIONAL WIRES AND (1) COMMON WIRE FROM PHASE A - CONTROLLER 'A' TO THIS APPROXIMATE LOCATION.

- Valve A15 Drip
- Valve A16 Drip
- Valve A17 Drip
- Valve A18 Bubbler
- Valve A19 Drip
- Valve B11 Drip
- Valve B12 Bubbler
- Valve B13 Drip
- Valve B14 Bubbler
- Valve B15 Drip
- Valve B16 Bubbler
- Valve B17 Drip
- Valve L20 Drip

NOTE A:
POINT OF CONNECTION #4 SHALL BE A CONNECTION DOWNSTREAM OF THE EXISTING 2" BACKFLOW PREVENTION DEVICE. VERIFY THE ACTUAL LOCATION, SIZE AND WATER PRESSURE IN THE FIELD PRIOR TO STARTING WORK. IF ANY OF THE POC INFORMATION SHOWN ON THESE DRAWING IS FOUND TO BE DIFFERENT THAN THE ACTUAL POC INFORMATION GATHERED IN THE FIELD, IMMEDIATELY NOTIFY THE LANDSCAPE ARCHITECT AND IRRIGATION CONSULTANT. SHOULD THE CONTRACTOR FAIL TO VERIFY THE POC INFORMATION ANY CHANGES REQUIRED BY LOW PRESSURE OR VOLUME SHALL BE THE SOLE RESPONSIBILITY OF THE CONTRACTOR.

STATIC WATER PRESSURE	70 PSI
DESIGN WATER PRESSURE	39 PSI
MAXIMUM SYSTEM DEMAND	19 GPM
RESIDUAL WATER PRESSURE	31 PSI

NOTE B:
CONTROLLER 'L' SHALL BE REPLACED WITH A NEW CALSENSE 24 STATION CONTROLLER, INSTALLED IN A STAINLESS STEEL ENCLOSURE (SEE LEGEND FOR COMPLETE MODEL NUMBER AND TYPE). FINAL LOCATION OF CONTROLLER AND ELECTRICAL POC SHALL BE CONFIRMED WITH OWNER'S AUTHORIZED REPRESENTATIVE PRIOR TO STARTING WORK.

NOTE C:
MAINLINE AND RELATED EQUIPMENT SHOWN WITHIN PAVING FOR CLARITY ONLY. ACTUAL MAINLINE AND RELATED EQUIPMENT LOCATION TO BE WITHIN PLANTERS AND A MINIMUM OF 18" OFF ADJACENT HARDSCAPE AND OTHER OBSTACLES TYP.

NOTE D:
CONTRACTOR SHALL ADJUST ALL HEADS AS REQUIRED TO ACCOMMODATE ANY VERTICAL OBSTRUCTIONS THAT MAY OCCUR, INCLUDING BUT NOT LIMITED TO LIGHT POLES, FIRE HYDRANTS, ETC. VERIFY ALL HEAD LAYOUT WITH OWNER'S AUTHORIZED REPRESENTATIVE PRIOR TO STARTING WORK.

NOTE E:
BUBBLERS AND LATERAL LINES ARE SHOWN WITHIN PAVING FOR CLARITY ONLY. ACTUAL LOCATION TO BE WITHIN PLANTER. BUBBLERS SHALL BE ALIGNED WITH TREES AND AS DIRECTED BY OWNERS AUTHORIZED REPRESENTATIVE. CONFIRM ALL LAYOUT IN FIELD WITH OWNERS AUTHORIZED REPRESENTATIVE PRIOR TO STARTING WORK.

NOTE F:
PLANTING LAYOUT TAKES PRIORITY OVER IRRIGATION EQUIPMENT LOCATIONS. DO NOT AFFECT HEDGE ROW; REFER TO PLANTING PLAN.

I HAVE COMPLIED WITH THE CRITERIA OF THE IRRIGATION GUIDELINES AND APPLIED THEM ACCORDINGLY FOR THE EFFICIENT USE OF WATER IN THE IRRIGATION DESIGN PLAN

PIERRE LANDSCAPE
5455 2nd Street, Irwindale, CA 91706
Tel No (626) 587-2121 Fax No (626) 513-2220
www.pierrelandscape.com

sweeney + associates
IRRIGATION DESIGN AND CONSULTING

0' 10' 20' 40'
SCALE: 1" = 20'-0"

NORTH

architecture
westbergwhite
14471 CHAMBERS RD, SUITE 210
TUSTIN, CA 92780
(714) 508-1780 508-1790 FAX
1775 HANCOCK ST, SUITE 120
SAN DIEGO, CA 92110
(619) 542-1188 542-1063 FAX
719 S. McCLELLAND STREET
SANTA MARIA, CA 93454
(805) 346-2991 346-8790 FAX

CONSULTANT:
SWA Laguna Beach Dallas Houston Los Angeles San Francisco Sausalito Shanghai
570 Glenneyre Street
Laguna Beach
CA 92651 2455
Fax 949.497.5471
Ph 949.497.7861
www.swagroup.com

PROJECT NAME:
Santa Ana College
Quad and Infrastructure Renovation
1530 West 17th Street
Santa Ana, California 92706

CLIENT:
Rancho Santiago Community College District
2323 North Broadway
Santa Ana, CA 92706

No.	Rev. Date	Description

JOB NO: WBWS401
DATE: 03/06/2015
DRAWN: SR
CHECK: SR/DG
ARCHITECT: PDW
ENGINEER:
ARCHITECT:

CONSULTANT:

STATE:
IDENTIFICATION STAMP
DIV. OF THE STATE ARCHITECT
OFFICE OF REGULATION SERVICES
APP NO. 04-113798
30-C2
AC FLS SS
DATE

SHEET DESCRIPTION:
IRRIGATION PLAN

SHEET NO:
L204

Bulletin 13.1

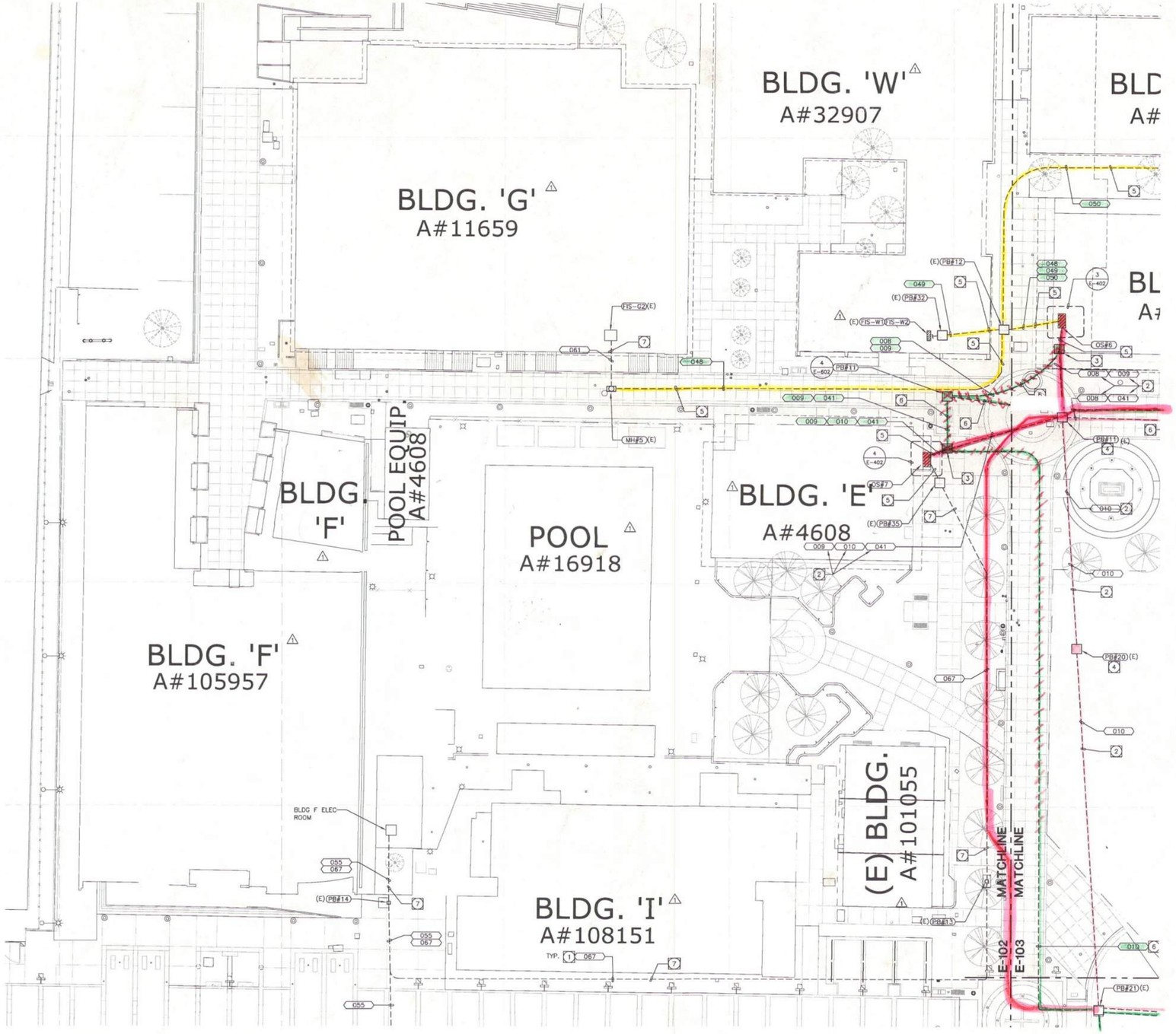

ENLARGED SITE POWER PLAN SCALE: 1"=20'-0" 1

SITE PLAN GENERAL NOTES:

1. CONTRACTOR SHALL EXERCISE EXTREME CAUTION IN EXCAVATING AND TRENCHING ON THIS SITE TO AVOID EXISTING DUCTS, PIPING OR CONDUITS, ETC., AND TO PREVENT HAZARDS TO PERSONNEL AND/OR DAMAGE TO EXISTING UNDERGROUND UTILITIES OR STRUCTURES WHETHER OR NOT SHOWN AND INSTALLED BY ANY OTHER CONTRACTS. THE ENGINEER IS NOT RESPONSIBLE FOR THE LOCATION OF UNDERGROUND UTILITIES OR STRUCTURES WHETHER OR NOT SHOWN OR DETAILED AND INSTALLED BY ANY OTHER CONTRACTS. THE CONTRACTOR SHALL IMMEDIATELY NOTIFY THE ENGINEER SHOULD SUCH UNIDENTIFIED CONDITIONS BE DISCOVERED. THESE DRAWINGS AND SPECIFICATIONS DO NOT INCLUDE THE NECESSARY ELEMENTS FOR CONSTRUCTION SAFETY.
2. CALL UNDERGROUND SERVICE ALERT (USA) AT 1 (800) 422-4133 OR APPLICABLE STATE AND LOCAL DIG SAFE OR UNDERGROUND ALERT HOTLINES PRIOR TO CONSTRUCTION START.
3. MINIMUM CONDUIT SIZE SHALL BE 3/4" – U.O.N.
4. MINIMUM CONDUCTOR SIZE SHALL BE #10 AWG. – U.O.N.
5. ALL SITE BRANCH CIRCUITS SHALL INCLUDE A NEC SIZED EQUIPMENT GROUND CONDUCTOR.
6. ALL ELECTRICAL EQUIPMENT MOUNTED OUTDOORS SHALL BE WEATHERPROOF (NEMA #3R).
7. ALL CONDUIT ONLY SHALL BE PROVIDED WITH A NYLON PULL STRING.
8. SEE ARCHITECTURAL/LANDSCAPE ARCHITECTURAL PLANS FOR EXACT LOCATIONS OF FIXTURES, PULLBOXES, MANHOLES, OTHER ELECTRICAL DEVICES, ETC. COORDINATE ALL UNDERGROUND STRUCTURES AND CONDUIT ROUTING WITH LANDSCAPE ARCHITECT PRIOR TO ROUGH-IN TO ENSURE THAT SUCH ITEMS ARE NOT PLACED IN CRITICAL LANDSCAPE PLANTING/HARDSCAPE AREAS.
9. UNLESS SPECIFICALLY SHOWN AS (E), (R), (ER), (D), EXISTING OR NON-BOLD, ALL ELECTRICAL DEVICES SHOWN ARE NEW.
10. PRIOR TO ANY EXCAVATION THE CONTRACTOR SHALL LOCATE AND VERIFY ALL UNDERGROUND UTILITIES BY SCANNING AND POTHOLING AND/OR WHATEVER MEANS NECESSARY.

SPECIFIC PLAN NOTES:

1. FEEDER NUMBER, SEE SHEET E-403 FOR ADDITIONAL INFORMATION.
2. EXISTING FEEDER TO BE REMOVED. ABANDON CONDUIT IN PLACE.
3. INTERCEPT EXISTING CONDUITS AND INSTALL NEW CONDUCTORS AS REQUIRED. PROVIDE INTERCEPT TYPE PULLBOX. SEE DETAIL #6, SHEET E-601.
4. EXISTING PULLBOX TO BE REMOVED.
5. EXISTING CONDUIT WITH NEW CONDUCTORS.
6. NEW CONDUIT WITH NEW CONDUCTORS.
7. EXISTING CONDUIT AND CONDUCTORS TO REMAIN. PROTECT IN PLACE.
8. NEW CONDUIT ONLY.
9. INSTALL PER SCE REQUIREMENTS.
10. PART OF THE CENTRAL PLANT PROJECT.
11. EXISTING SCE VAULT TO REMAIN. COORDINATE ALL WORK WITH SCE.
12. EXISTING SCE TRANSFORMER AND SWITCH TO BE REMOVED. COORDINATE ALL WORK WITH SCE. SEE SHEET E-401 FOR ADDITIONAL INFORMATTION.
13. EXISTING MAIN SWITCHBOARD "MS" TO BE REMOVED. SEE SHEET E-401 FOR ADDITIONAL INFORMATION.
14. NEW PULLBOX FOR FUTURE USE.
15. DASHED LINE DENOTES FUTURE BUILDING.
16. LOCATED IN SECOND FLOOR ELECTRICAL ROOM.

architecture
westbergwhite
14471 CHAMBERS RD, SUITE 210
TUSTIN, CA 92780
(714) 508-1780 508-1790 FAX
1775 HANCOCK ST, SUITE 120
SAN DIEGO, CA 92110
(619) 542-1188 542-1663 FAX
719 S. McCLELLAND STREET
SANTA MARIA, CA 93454
(805) 346-2991 346-8790 FAX

CONSULTANT:
tklsc
COLLABORATIVE
18231 Laguna Canyon Road, Suite 100
Irvine, California 92618
949.751.5800 www.tklsc.com
Jerry Leonhardt
tklsc Job #: 2013-0538

PROJECT NAME:
Santa Ana College
Quad and Infrastructure Renovation
1530 West 17th Street
Santa Ana, California 92706

CLIENT:
Rancho Santiago Community College District
2323 North Broadway
Santa Ana, CA 92706

No.	Rev. Date	Description
4	06/16/2015	ADDENDUM 04
5	06/25/2015	ADDENDUM 05

JOB NO: 13022.02
DATE: 03/06/2015
DRAWN: MM / RR / RB
CHECK: JG / MM
ARCHITECT: PDW
ENGINEER:
ARCHITECT:

CONSULTANT:
REGISTERED PROFESSIONAL ENGINEER RAYMOND W. SMELSER No. E15610 ELECTRICAL STATE OF CALIFORNIA

STATE:
IDENTIFICATION STAMP
DIV. OF THE STATE ARCHITECT
OFFICE OF REGULATION SERVICES
APP NO:04-113798
FILE NO:30-C2
AC FLS SS
DATE

SHEET DESCRIPTION:
ENLARGED SITE POWER PLAN

SHEET NO:
E-102

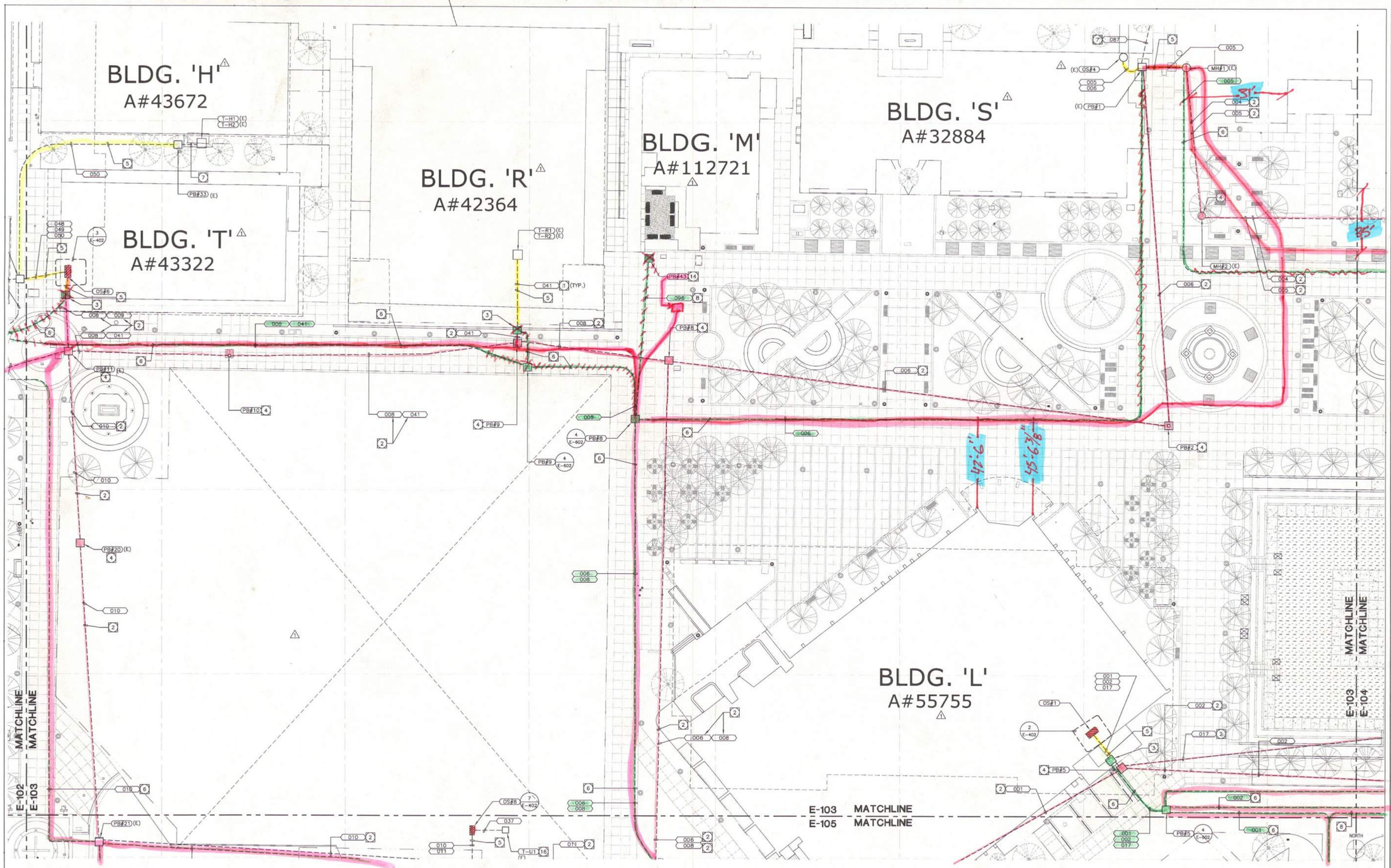

ENLARGED SITE POWER PLAN

SCALE: 1"=20'-0"

1

SITE PLAN GENERAL NOTES:

1. CONTRACTOR SHALL EXERCISE EXTREME CAUTION IN EXCAVATING AND TRENCHING ON THIS SITE TO AVOID EXISTING DUCTS, PIPING OR CONDUITS, ETC., AND TO PREVENT HAZARDS TO PERSONNEL AND/OR DAMAGE TO EXISTING UNDERGROUND UTILITIES OR STRUCTURES WHETHER OR NOT SHOWN AND INSTALLED BY ANY OTHER CONTRACTS. THE ENGINEER IS NOT RESPONSIBLE FOR THE LOCATION OF UNDERGROUND UTILITIES OR STRUCTURES WHETHER OR NOT SHOWN OR DETAILED AND INSTALLED BY ANY OTHER CONTRACTS. THE CONTRACTOR SHALL IMMEDIATELY NOTIFY THE ENGINEER SHOULD SUCH UNIDENTIFIED CONDITIONS BE DISCOVERED. THESE DRAWINGS AND SPECIFICATIONS DO NOT INCLUDE THE NECESSARY ELEMENTS FOR CONSTRUCTION SAFETY.
2. CALL UNDERGROUND SERVICE ALERT (USA) AT 1 (800) 422-4133 OR APPLICABLE STATE AND LOCAL DIG SAFE OR UNDERGROUND ALERT HOTLINES PRIOR TO CONSTRUCTION START.
3. MINIMUM CONDUIT SIZE SHALL BE 3/4" - U.O.N.
4. MINIMUM CONDUCTOR SIZE SHALL BE #10 AWG. - U.O.N.
5. ALL SITE BRANCH CIRCUITS SHALL INCLUDE A NEC SIZED EQUIPMENT GROUND CONDUCTOR.
6. ALL ELECTRICAL EQUIPMENT MOUNTED OUTDOORS SHALL BE WEATHERPROOF (NEMA #3R).
7. ALL CONDUIT ONLY SHALL BE PROVIDED WITH A NYLON PULL STRING.
8. SEE ARCHITECTURAL/LANDSCAPE ARCHITECTURAL PLANS FOR EXACT LOCATIONS OF FIXTURES, PULLBOXES, MANHOLES, OTHER ELECTRICAL DEVICES, ETC. COORDINATE ALL UNDERGROUND STRUCTURES AND CONDUIT ROUTING WITH LANDSCAPE ARCHITECT PRIOR TO ROUGH-IN TO ENSURE THAT SUCH ITEMS ARE NOT PLACED IN CRITICAL LANDSCAPE PLANTING/HARDSCAPE AREAS.
9. UNLESS SPECIFICALLY SHOWN AS (E), (R), (ER), (D), EXISTING OR NON-BOLD, ALL ELECTRICAL DEVICES SHOWN ARE NEW.
10. PRIOR TO ANY EXCAVATION THE CONTRACTOR SHALL LOCATE AND VERIFY ALL UNDERGROUND UTILITIES BY SCANNING AND POTHOLING AND/OR WHATEVER MEANS NECESSARY.

SPECIFIC PLAN NOTES:

1. FEEDER NUMBER, SEE SHEET E-403 FOR ADDITIONAL INFORMATION.
2. EXISTING FEEDER TO BE REMOVED. ABANDON CONDUIT IN PLACE.
3. INTERCEPT EXISTING CONDUITS AND INSTALL NEW CONDUCTORS AS REQUIRED. PROVIDE INTERCEPT TYPE PULLBOX. SEE DETAIL #6, SHEET E-601.
4. EXISTING PULLBOX TO BE REMOVED.
5. EXISTING CONDUIT WITH NEW CONDUCTORS.
6. NEW CONDUIT WITH NEW CONDUCTORS.
7. EXISTING CONDUIT AND CONDUCTORS TO REMAIN. PROTECT IN PLACE.
8. NEW CONDUIT ONLY.
9. INSTALL PER SCE REQUIREMENTS.
10. PART OF THE CENTRAL PLANT PROJECT.
11. EXISTING SCE VAULT TO REMAIN. COORDINATE ALL WORK WITH SCE.
12. EXISTING SCE TRANSFORMER AND SWITCH TO BE REMOVED. COORDINATE ALL WORK WITH SCE. SEE SHEET E-401 FOR ADDITIONAL INFORMATTION.
13. EXISTING MAIN SWITCHBOARD "MS" TO BE REMOVED. SEE SHEET E-401 FOR ADDITIONAL INFORMATION.
14. NEW PULLBOX FOR FUTURE USE.
15. DASHED LINE DENOTES FUTURE BUILDING.
16. LOCATED IN SECOND FLOOR ELECTRICAL ROOM.

architecture
westbergwhite

14471 CHAMBERS RD, SUITE 210
TUSTIN, CA 92780
(714) 508-1780 508-1790 FAX

1775 HANCOCK ST, SUITE 120
SAN DIEGO, CA 92110
(619) 542-1188 542-1663 FAX

719 S. McCLELLAND STREET
SANTA MARIA, CA 93454
(805) 346-2991 346-8790 FAX

CONSULTANT:
tklsc
COLLABORATIVE
15231 Laguna Canyon Road, Suite 100
Irvine, California 92618
949.751.5800 www.tklsc.com
Jerry Leonhardt
tklsc Job #: 2013-0538

PROJECT NAME:

Santa Ana College
Quad and Infrastructure Renovation
1530 West 17th Street
Santa Ana, California 92706

CLIENT:
Rancho Santiago Community College District
2323 North Broadway
Santa Ana, CA 92706

No.	Rev. Date	Description
4	06/16/2015	ADDENDUM 04
5	06/25/2015	ADDENDUM 05

JOB NO: 13022.02
DATE: 03/06/2015
DRAWN: MM / RR / RB
CHECK: JG / MM
ARCHITECT: PDW
ENGINEER:
ARCHITECT:

CONSULTANT:

REGISTERED PROFESSIONAL ENGINEER RAYMOND W. SWISTER No. E15610 ELECTRICAL STATE OF CALIFORNIA

STATE:

IDENTIFICATION STAMP DIV. OF THE STATE ARCHITECT OFFICE OF REGULATION SERVICES
APP NO 04-113798
FILE NO 30-C2
AC ____ FLS ____ SS ____
DATE ____

SHEET DESCRIPTION:
ENLARGED SITE POWER PLAN

SHEET NO:
E-103

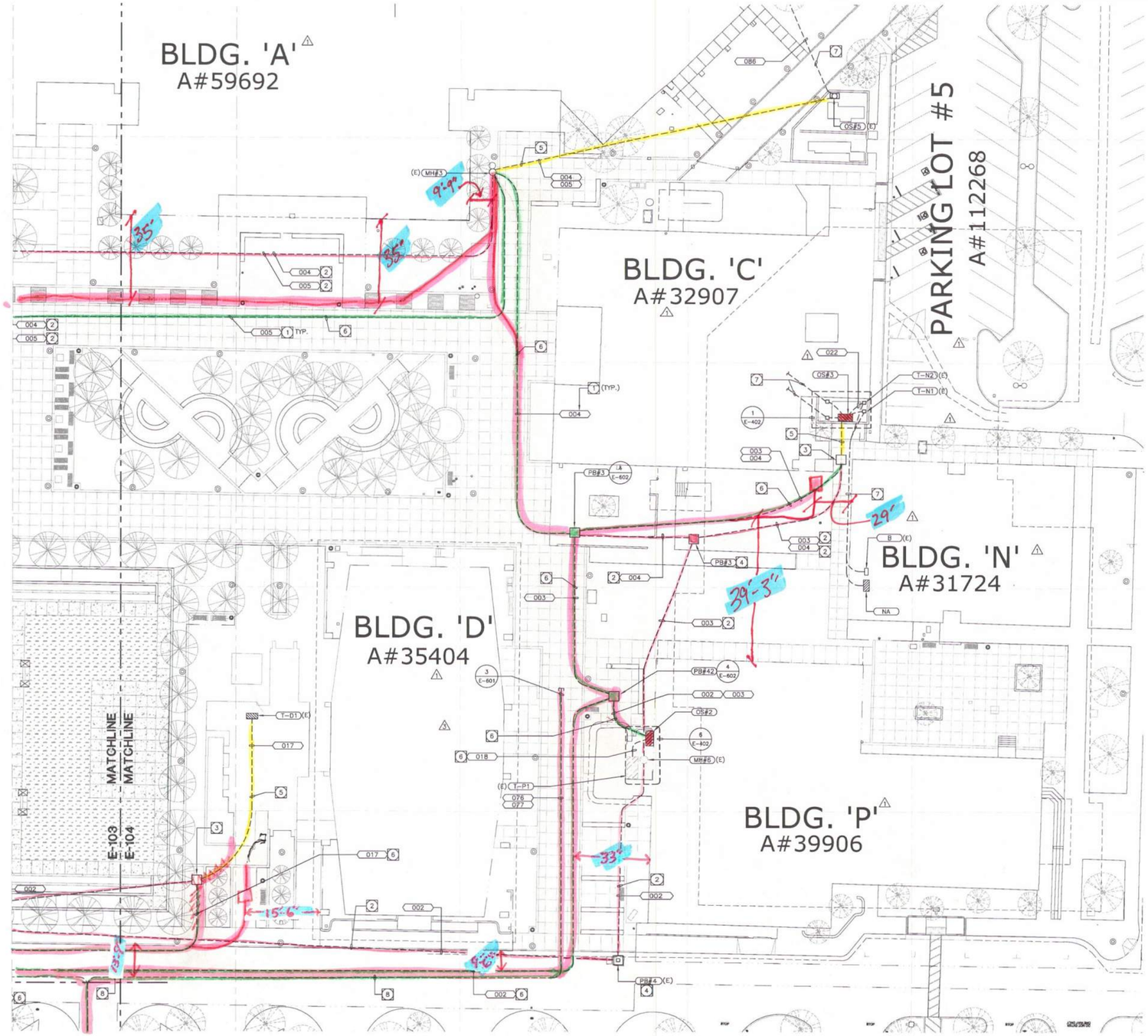

ENLARGED SITE POWER PLAN

SCALE: 1"=20'-0"

1

SITE PLAN GENERAL NOTES:

1. CONTRACTOR SHALL EXERCISE EXTREME CAUTION IN EXCAVATING AND TRENCHING ON THIS SITE TO AVOID EXISTING DUCTS, PIPING OR CONDUITS, ETC., AND TO PREVENT HAZARDS TO PERSONNEL AND/OR DAMAGE TO EXISTING UNDERGROUND UTILITIES OR STRUCTURES WHETHER OR NOT SHOWN AND INSTALLED BY ANY OTHER CONTRACTS. THE ENGINEER IS NOT RESPONSIBLE FOR THE LOCATION OF UNDERGROUND UTILITIES OR STRUCTURES WHETHER OR NOT SHOWN OR DETAILED AND INSTALLED BY ANY OTHER CONTRACTS. THE CONTRACTOR SHALL IMMEDIATELY NOTIFY THE ENGINEER SHOULD SUCH UNIDENTIFIED CONDITIONS BE DISCOVERED. THESE DRAWINGS AND SPECIFICATIONS DO NOT INCLUDE THE NECESSARY ELEMENTS FOR CONSTRUCTION SAFETY.
2. CALL UNDERGROUND SERVICE ALERT (USA) AT 1 (800) 422-4133 OR APPLICABLE STATE AND LOCAL DIG SAFE OR UNDERGROUND ALERT HOTLINES PRIOR TO CONSTRUCTION START.
3. MINIMUM CONDUIT SIZE SHALL BE 3/4" – U.O.N.
4. MINIMUM CONDUCTOR SIZE SHALL BE #10 AWG. – U.O.N.
5. ALL SITE BRANCH CIRCUITS SHALL INCLUDE A NEC SIZED EQUIPMENT GROUND CONDUCTOR.
6. ALL ELECTRICAL EQUIPMENT MOUNTED OUTDOORS SHALL BE WEATHERPROOF (NEMA #3R).
7. ALL CONDUIT ONLY SHALL BE PROVIDED WITH A NYLON PULL STRING.
8. SEE ARCHITECTURAL/LANDSCAPE ARCHITECTURAL PLANS FOR EXACT LOCATIONS OF FIXTURES, PULLBOXES, MANHOLES, OTHER ELECTRICAL DEVICES, ETC. COORDINATE ALL UNDERGROUND STRUCTURES AND CONDUIT ROUTING WITH LANDSCAPE ARCHITECT PRIOR TO ROUGH-IN TO ENSURE THAT SUCH ITEMS ARE NOT PLACED IN CRITICAL LANDSCAPE PLANTING/HARDSCAPE AREAS.
9. UNLESS SPECIFICALLY SHOWN AS (E), (R), (ER), (D), EXISTING OR NON-BOLD, ALL ELECTRICAL DEVICES SHOWN ARE NEW.
10. PRIOR TO ANY EXCAVATION THE CONTRACTOR SHALL LOCATE AND VERIFY ALL UNDERGROUND UTILITIES BY SCANNING AND POTHOLING AND/OR WHATEVER MEANS NECESSARY.

SPECIFIC PLAN NOTES:

1. FEEDER NUMBER, SEE SHEET E-403 FOR ADDITIONAL INFORMATION.
2. EXISTING FEEDER TO BE REMOVED. ABANDON CONDUIT IN PLACE.
3. INTERCEPT EXISTING CONDUITS AND INSTALL NEW CONDUCTORS AS REQUIRED. PROVIDE INTERCEPT TYPE PULLBOX. SEE DETAIL #6, SHEET E-601.
4. EXISTING PULLBOX TO BE REMOVED.
5. EXISTING CONDUIT WITH NEW CONDUCTORS.
6. NEW CONDUIT WITH NEW CONDUCTORS.
7. EXISTING CONDUIT AND CONDUCTORS TO REMAIN. PROTECT IN PLACE.
8. NEW CONDUIT ONLY.
9. INSTALL PER SCE REQUIREMENTS.
10. PART OF THE CENTRAL PLANT PROJECT.
11. EXISTING SCE VAULT TO REMAIN. COORDINATE ALL WORK WITH SCE.
12. EXISTING SCE TRANSFORMER AND SWITCH TO BE REMOVED. COORDINATE ALL WORK WITH SCE. SEE SHEET E-401 FOR ADDITIONAL INFORMATION.
13. EXISTING MAIN SWITCHBOARD "MS" TO BE REMOVED SEE SHEET E-401 FOR ADDITIONAL INFORMATION.
14. NEW PULLBOX FOR FUTURE USE.
15. DASHED LINE DENOTES FUTURE BUILDING.
16. LOCATED IN SECOND FLOOR ELECTRICAL ROOM.

architecture
westbergwhite

14471 CHAMBERS RD, SUITE 210
TUSTIN, CA 92780
(714) 508-1780 508-1790 FAX

1775 HANCOCK ST, SUITE 120
SAN DIEGO, CA 92110
(619) 542-1188 542-1663 FAX

719 S. McCLELLAND STREET
SANTA MARIA, CA 93454
(805) 346-2991 346-8790 FAX

CONSULTANT:
tk|sc
COLLABORATIVE
15231 Laguna Canyon Road, Suite 100
Irvine, California 92618
949.751.5800 www.tktsc.com
Jerry Leonhardt
tktsc Job #: 2013-0038

PROJECT NAME:

Santa Ana College
Quad and Infrastructure Renovation
1530 West 17th Street
Santa Ana, California 92706

CLIENT:
Rancho Santiago Community College District
2323 North Broadway
Santa Ana, CA 92706

Rev.	Date	Description
4	06/16/2015	ADDENDUM 04
5	06/25/2015	ADDENDUM 05

JOB NO: 13022.02
DATE: 03/06/2015
DRAWN: MM / RR / RB
CHECK: JG / MM
ARCHITECT: PDW
ENGINEER:
ARCHITECT:

CONSULTANT:

REGISTERED PROFESSIONAL ENGINEER
RAYMOND W. JANNUZZI
No. E15610
ELECTRICAL
STATE OF CALIFORNIA

STATE:

IDENTIFICATION STAMP
DIV. OF THE STATE ARCHITECT
OFFICE OF REGULATION SERVICES
APP NO: 04-113798
FILE NO: 30-C2
AC FLS SS
DATE

SHEET DESCRIPTION:
ENLARGED SITE POWER PLAN

SHEET NO:
E-104

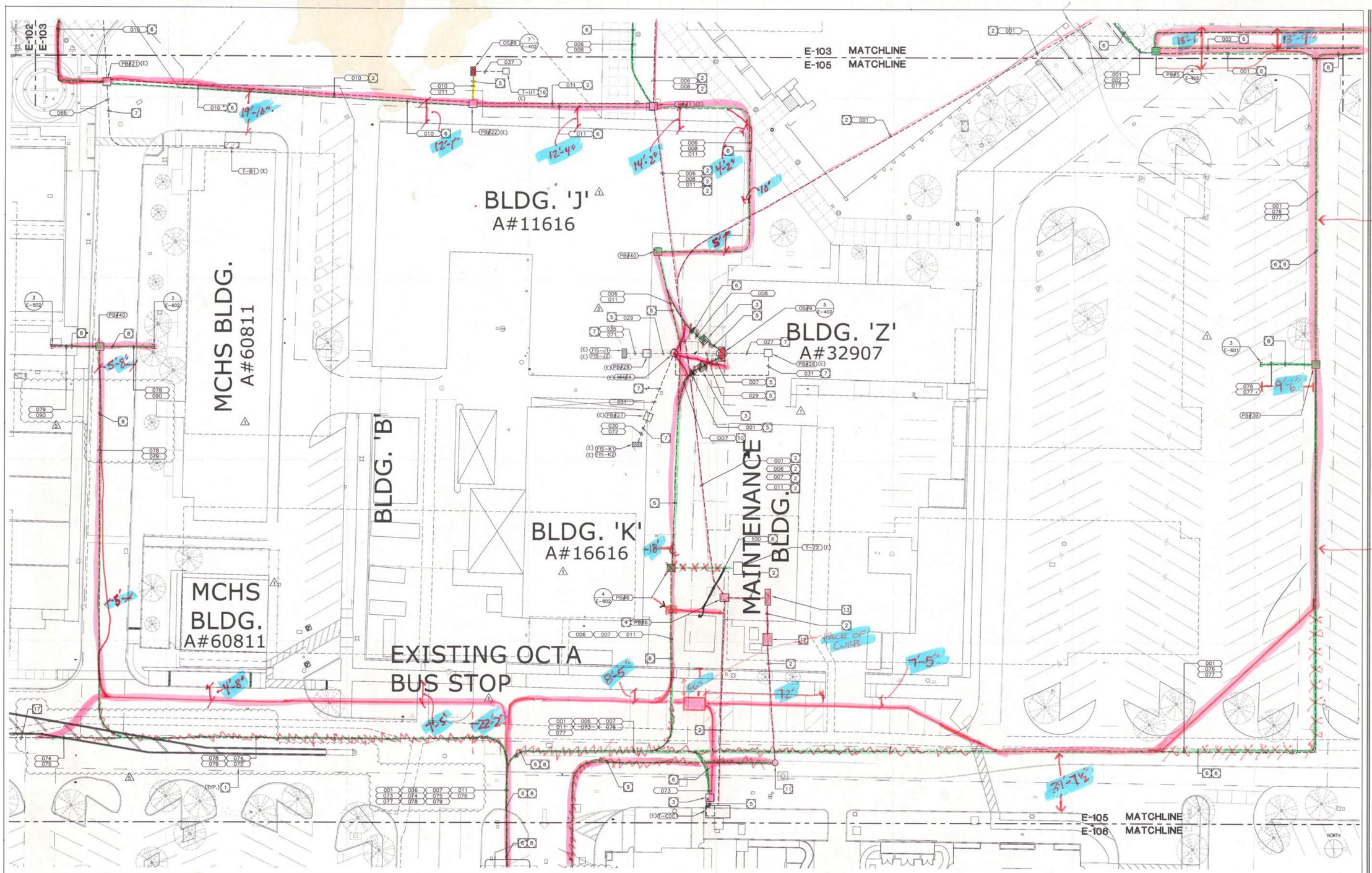

ENLARGED SITE POWER PLAN SCALE: 1"=20'-0" 1

SITE PLAN GENERAL NOTES:

1. CONTRACTOR SHALL EXERCISE EXTREME CAUTION IN EXCAVATING AND TRENCHING ON THIS SITE TO AVOID EXISTING DUCTS, PIPING OR CONDUITS, ETC., AND TO PREVENT HAZARDS TO PERSONNEL AND/OR DAMAGE TO EXISTING UNDERGROUND UTILITIES OR STRUCTURES WHETHER OR NOT SHOWN AND INSTALLED BY ANY OTHER CONTRACTS. THE ENGINEER IS NOT RESPONSIBLE FOR THE LOCATION OF UNDERGROUND UTILITIES OR STRUCTURES WHETHER OR NOT SHOWN OR DETAILED AND INSTALLED BY ANY OTHER CONTRACTS. THE CONTRACTOR SHALL IMMEDIATELY NOTIFY THE ENGINEER SHOULD SUCH UNIDENTIFIED CONDITIONS BE DISCOVERED. THESE DRAWINGS AND SPECIFICATIONS DO NOT INCLUDE THE NECESSARY ELEMENTS FOR CONSTRUCTION SAFETY.
2. CALL UNDERGROUND SERVICE ALERT (USA) AT 1 (800) 422-4133 OR APPLICABLE STATE AND LOCAL DIG SAFE OR UNDERGROUND ALERT HOTLINES PRIOR TO CONSTRUCTION START.
3. MINIMUM CONDUIT SIZE SHALL BE 3/4" – U.O.N.
4. MINIMUM CONDUCTOR SIZE SHALL BE #10 AWG. – U.O.N.
5. ALL SITE BRANCH CIRCUITS SHALL INCLUDE A NEC SIZED EQUIPMENT GROUND CONDUCTOR.
6. ALL ELECTRICAL EQUIPMENT MOUNTED OUTDOORS SHALL BE WEATHERPROOF (NEMA #3R).
7. ALL CONDUIT ONLY SHALL BE PROVIDED WITH A NYLON PULL STRING.
8. SEE ARCHITECTURAL/LANDSCAPE ARCHITECTURAL PLANS FOR EXACT LOCATIONS OF FIXTURES, PULLBOXES, MANHOLES, OTHER ELECTRICAL DEVICES, ETC. COORDINATE ALL UNDERGROUND STRUCTURES AND CONDUIT ROUTING WITH LANDSCAPE ARCHITECT PRIOR TO ROUGH-IN TO ENSURE THAT SUCH ITEMS ARE NOT PLACED IN CRITICAL LANDSCAPE PLANTING/HARDSCAPE AREAS.
9. UNLESS SPECIFICALLY SHOWN AS (E), (R), (ER), (D), EXISTING OR NON-BOLD, ALL ELECTRICAL DEVICES SHOWN ARE NEW.
10. PRIOR TO ANY EXCAVATION THE CONTRACTOR SHALL LOCATE AND VERIFY ALL UNDERGROUND UTILITIES BY SCANNING AND POTHOLING AND/OR WHATEVER MEANS NECESSARY.

SPECIFIC PLAN NOTES:

1. FEEDER NUMBER, SEE SHEET E-403 FOR ADDITIONAL INFORMATION.
2. EXISTING FEEDER TO BE REMOVED. ABANDON CONDUIT IN PLACE.
3. INTERCEPT EXISTING CONDUITS AND INSTALL NEW CONDUCTORS AS REQUIRED. PROVIDE INTERCEPT TYPE PULLBOX. SEE DETAIL #6, SHEET E-601.
4. EXISTING PULLBOX TO BE REMOVED.
5. EXISTING CONDUIT WITH NEW CONDUCTORS.
6. NEW CONDUIT WITH NEW CONDUCTORS.
7. EXISTING CONDUIT AND CONDUCTORS TO REMAIN. PROTECT IN PLACE.
8. NEW CONDUIT ONLY.
9. INSTALL PER SCE REQUIREMENTS.
10. PART OF THE CENTRAL PLANT PROJECT.
11. EXISTING SCE VAULT TO REMAIN. COORDINATE ALL WORK WITH SCE.
12. EXISTING SCE TRANSFORMER AND SWITCH TO BE REMOVED. COORDINATE ALL WORK WITH SCE. SEE SHEET E-401 FOR ADDITIONAL INFORMATTION.
13. EXISTING MAIN SWITCHBOARD "MS" TO BE REMOVED. SEE SHEET E-401 FOR ADDITIONAL INFORMATION.
14. NEW PULLBOX FOR FUTURE USE.
15. DASHED LINE DENOTES FUTURE BUILDING.
16. LOCATED IN SECOND FLOOR ELECTRICAL ROOM.
17. CONTINUED ON CENTRAL PLANT DRAWINGS. SEE SHEET E-102.

architecture
westbergwhite
14471 CHAMBERS RD, SUITE 210
TUSTIN, CA 92780
(714) 508-1780 508-1790 FAX
1775 HANCOCK ST, SUITE 120
SAN DIEGO, CA 92110
(619) 542-1188 542-1663 FAX
719 S. McCLELLAND STREET
SANTA MARIA, CA 93454
(805) 346-2991 346-8790 FAX

CONSULTANT:
tklsc COLLABORATIVE
15231 Laguna Canyon Road, Suite 100
Irvine, California 92618
949.751.5800 www.tklsc.com
Jerry Leonhardt
tklsc Job #: 2013-0538

PROJECT NAME:
Santa Ana College
Quad and Infrastructure Renovation
1530 West 17th Street
Santa Ana, California 92706

CLIENT:
Rancho Santiago Community College District
2323 North Broadway
Santa Ana, CA 92706

No.	Rev. Date	Description
4	06/16/2015	ADDENDUM 04
5	06/25/2015	ADDENDUM 05

JOB NO: 13022.02
DATE: 03/06/2015
DRAWN: MM / RR / RB
CHECK: JG / MM
ARCHITECT: PDW
ENGINEER:
ARCHITECT:

CONSULTANT:
REGISTERED PROFESSIONAL ENGINEER RAYMOND W. SIMUNOVICH No. E15610 ELECTRICAL STATE OF CALIFORNIA

STATE:
IDENTIFICATION STAMP DIV. OF THE STATE ARCHITECT OFFICE OF REGULATION SERVICES
APP NO:04-113798
FILE NO:30-C2
AC ____ FLS ____ SS ____
DATE ____

SHEET DESCRIPTION:
ENLARGED SITE POWER PLAN

SHEET NO:
E-105

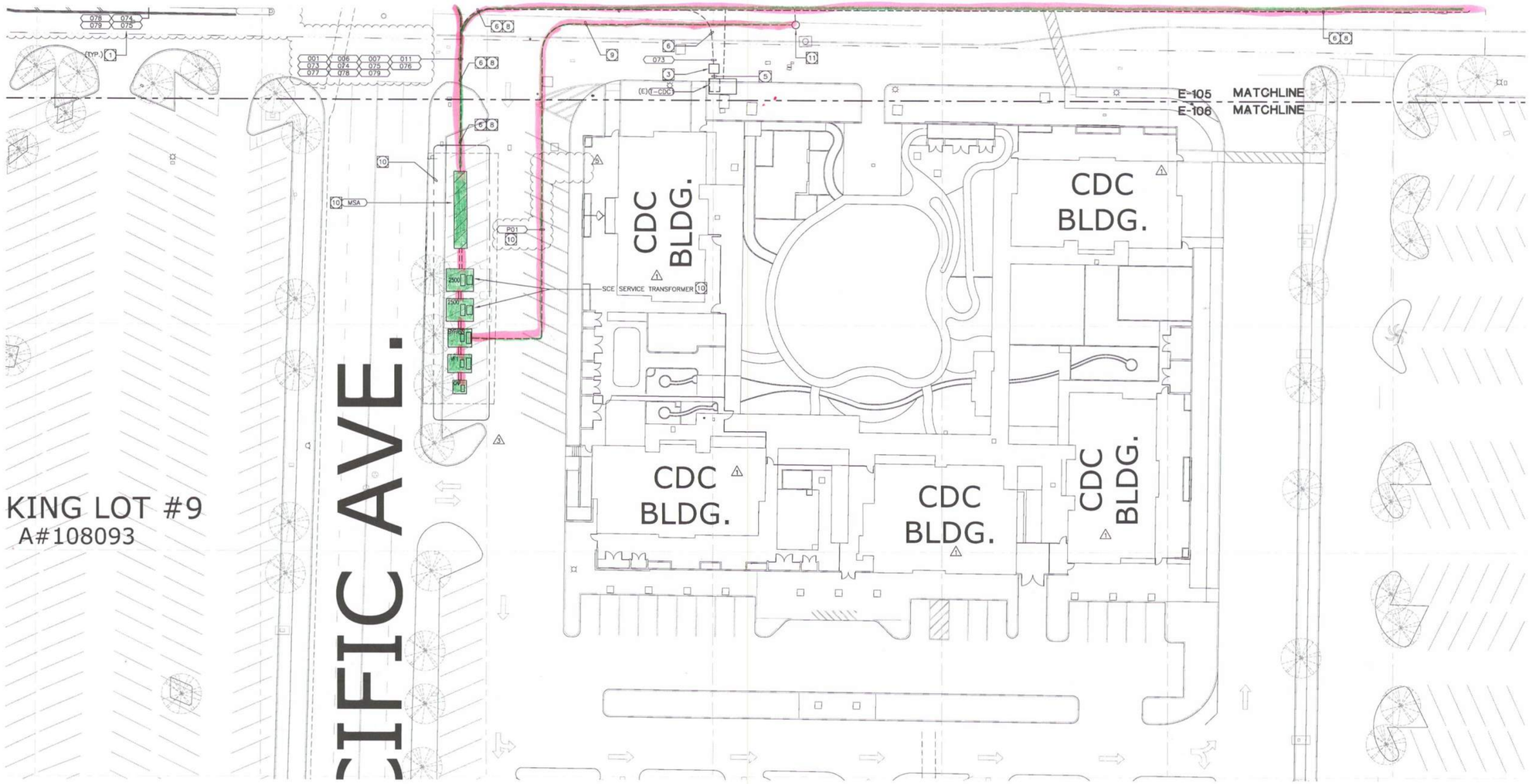

ENLARGED SITE POWER PLAN

SCALE: 1"=20'-0"

1

SITE PLAN GENERAL NOTES:

1. CONTRACTOR SHALL EXERCISE EXTREME CAUTION IN EXCAVATING AND TRENCHING ON THIS SITE TO AVOID EXISTING DUCTS, PIPING OR CONDUITS, ETC., AND TO PREVENT HAZARDS TO PERSONNEL AND/OR DAMAGE TO EXISTING UNDERGROUND UTILITIES OR STRUCTURES WHETHER OR NOT SHOWN AND INSTALLED BY ANY OTHER CONTRACTS. THE ENGINEER IS NOT RESPONSIBLE FOR THE LOCATION OF UNDERGROUND UTILITIES OR STRUCTURES WHETHER OR NOT SHOWN OR DETAILED AND INSTALLED BY ANY OTHER CONTRACTS. THE CONTRACTOR SHALL IMMEDIATELY NOTIFY THE ENGINEER SHOULD SUCH UNIDENTIFIED CONDITIONS BE DISCOVERED. THESE DRAWINGS AND SPECIFICATIONS DO NOT INCLUDE THE NECESSARY ELEMENTS FOR CONSTRUCTION SAFETY.
2. CALL UNDERGROUND SERVICE ALERT (USA) AT 1 (800) 422-4133 OR APPLICABLE STATE AND LOCAL DIG SAFE OR UNDERGROUND ALERT HOTLINES PRIOR TO CONSTRUCTION START.
3. MINIMUM CONDUIT SIZE SHALL BE 3/4" - U.O.N.
4. MINIMUM CONDUCTOR SIZE SHALL BE #10 AWG. - U.O.N.
5. ALL SITE BRANCH CIRCUITS SHALL INCLUDE A NEC SIZED EQUIPMENT GROUND CONDUCTOR.
6. ALL ELECTRICAL EQUIPMENT MOUNTED OUTDOORS SHALL BE WEATHERPROOF (NEMA #3R).
7. ALL CONDUIT ONLY SHALL BE PROVIDED WITH A NYLON PULL STRING.
8. SEE ARCHITECTURAL/LANDSCAPE ARCHITECTURAL PLANS FOR EXACT LOCATIONS OF FIXTURES, PULLBOXES, MANHOLES, OTHER ELECTRICAL DEVICES, ETC. COORDINATE ALL UNDERGROUND STRUCTURES AND CONDUIT ROUTING WITH LANDSCAPE ARCHITECT PRIOR TO ROUGH-IN TO ENSURE THAT SUCH ITEMS ARE NOT PLACED IN CRITICAL LANDSCAPE PLANTING/HARDSCAPE AREAS.
9. UNLESS SPECIFICALLY SHOWN AS (E), (R), (ER), (D), EXISTING OR NON-BOLD, ALL ELECTRICAL DEVICES SHOWN ARE NEW.

SPECIFIC PLAN NOTES:

1. FEEDER NUMBER, SEE SHEET E-403 FOR ADDITIONAL INFORMATION.
2. EXISTING FEEDER TO BE REMOVED. ABANDON CONDUIT IN PLACE.
3. INTERCEPT EXISTING CONDUITS AND INSTALL NEW CONDUCTORS AS REQUIRED. PROVIDE INTERCEPT TYPE PULLBOX. SEE DETAIL #6, SHEET E-601.
4. EXISTING PULLBOX TO BE REMOVED.
5. EXISTING CONDUIT WITH NEW CONDUCTORS.
6. NEW CONDUIT WITH NEW CONDUCTORS.
7. EXISTING CONDUIT AND CONDUCTORS TO REMAIN. PROTECT IN PLACE.
8. NEW CONDUIT ONLY.
9. INSTALL PER SCE REQUIREMENTS.
10. PART OF THE CENTRAL PLANT PROJECT.
11. EXISTING SCE VAULT TO REMAIN. COORDINATE ALL WORK WITH SCE.
12. EXISTING SCE TRANSFORMER AND SWITCH TO BE REMOVED. COORDINATE ALL WORK WITH SCE. SEE SHEET E-401 FOR ADDITIONAL INFORMATION.
13. EXISTING MAIN SWITCHBOARD "MS" TO BE REMOVED. SEE SHEET E-401 FOR ADDITIONAL INFORMATION.
14. NEW PULLBOX FOR FUTURE USE.
15. DASHED LINE DENOTES FUTURE BUILDING.
16. LOCATED IN SECOND FLOOR ELECTRICAL ROOM.

architecture
westbergwhite

14471 CHAMBERS RD, SUITE 210
TUSTIN, CA 92780
(714) 508-1780 508-1790 FAX

1775 HANCOCK ST, SUITE 120
SAN DIEGO, CA 92110
(619) 542-1188 542-1663 FAX

719 S. McCLELLAND STREET
SANTA MARIA, CA 93454
(805) 346-2991 346-8790 FAX

CONSULTANT:
tk1sc COLLABORATIVE
15231 Laguna Canyon Road, Suite 100
Irvine, California 92618
949.751.5800 www.tk1sc.com
Jerry Leonhardt
tk1sc Job #: 2013-0538

PROJECT NAME:

Santa Ana College
Quad and Infrastructure Renovation
1530 West 17th Street
Santa Ana, California 92706

CLIENT:
Rancho Santiago Community College District
2323 North Broadway
Santa Ana, CA 92706

No.	Rev. Date	Description
4	06/16/2015	ADDENDUM 04
5	06/25/2015	ADDENDUM 05

JOB NO:	13022.02
DATE:	03/06/2015
DRAWN:	MM / RR / RB
CHECK:	JG / MM
ARCHITECT:	PDW
ENGINEER:	
ARCHITECT:	

CONSULTANT:

REGISTERED PROFESSIONAL ENGINEER RAYMOND W. SWANSON No. E15610 ELECTRICAL STATE OF CALIFORNIA

STATE:

IDENTIFICATION STAMP DIV. OF THE STATE ARCHITECT OFFICE OF REGULATION SERVICES
APP NO 04-113798
FILE NO 30-C2
AC FLS SS
DATE

SHEET DESCRIPTION:
ENLARGED SITE POWER PLAN

SHEET NO:
E-106

U:\2013\13022.02\SD\ECO\Santa Ana Comm. College - Central Plant Design\ACAD\Xref\Shared\sym\2013-0538T1\2013-0538T1SYM.dwg 6/24/2015 4:03:07 PM

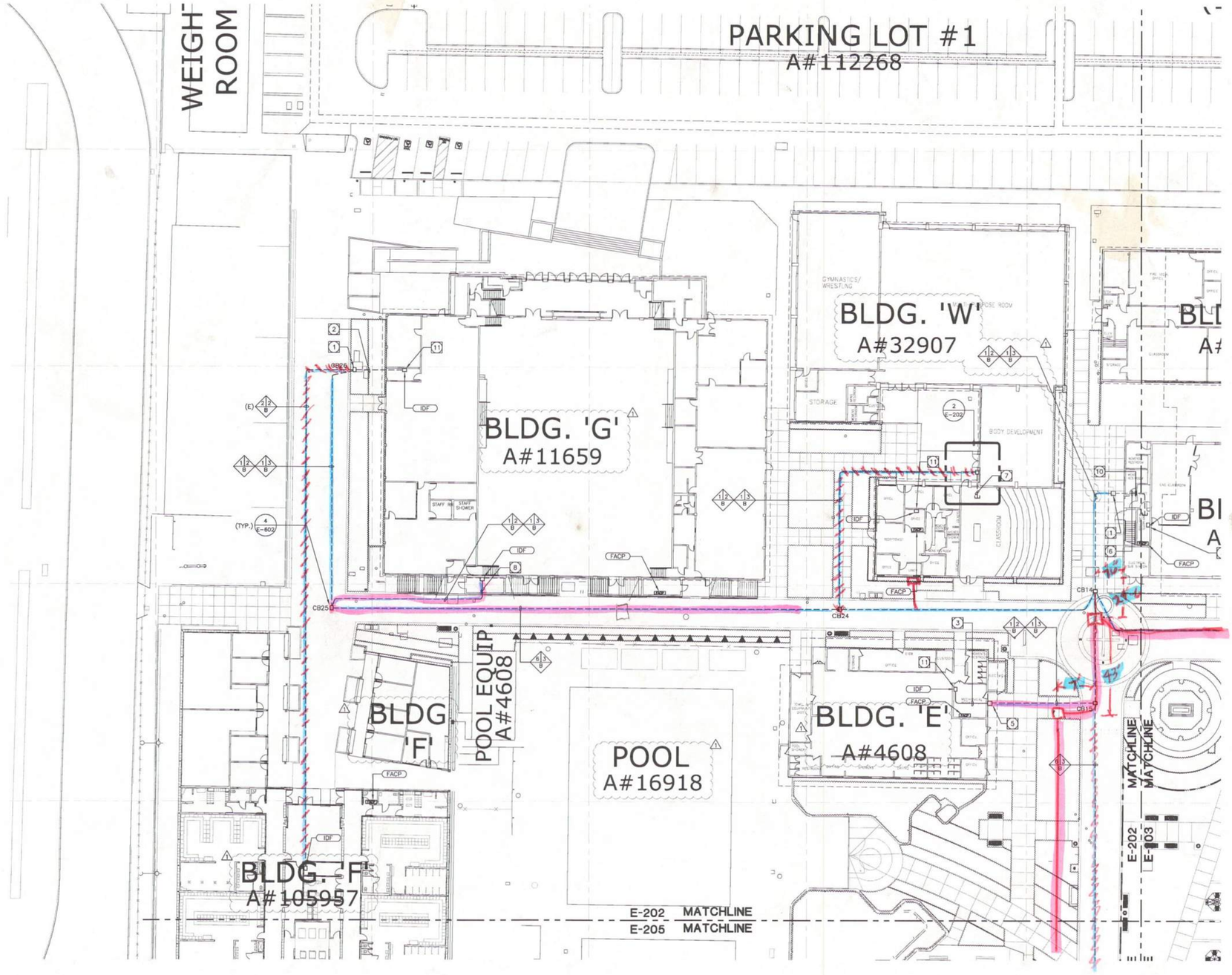

ENLARGED SITE SIGNAL PLAN SCALE: 1"=20'-0" | 1

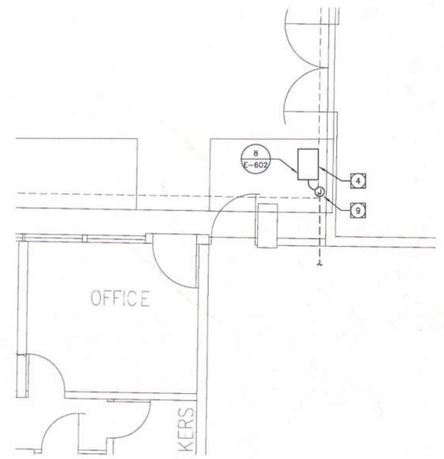

ENLARGED PLAN SCALE: 1/4"=1'-0" | 2

GENERAL DEMOLITION NOTES:

1. THE ELECTRICAL DRAWINGS ARE DIAGRAMMATIC ONLY. DO NOT SCALE THE ELECTRICAL DRAWINGS TO DETERMINE THE LOCATION OF EQUIPMENT OR OUTLETS. SEE ARCHITECTURAL PLANS, WHERE PROVIDED ON PROJECT, FOR EXTENT OF DEMOLITION.
2. THE EXISTING CONDITIONS SHOWN ARE FROM AVAILABLE RECORD DRAWINGS AND SHOWN FOR REFERENCE ONLY. CONTRACTOR SHALL VERIFY ACTUAL EXISTING CONDITIONS AT SITE PRIOR TO SUBMITTING BID. ALL DEMOLITION, ALTERATION, EXTENSION, RELOCATION, REHABILITATION WORK SHALL BE INCLUDED IN CONTRACT. NO ADDITIONAL ALLOWANCE OR CHANGE ORDERS WILL BE ACCEPTED.
3. CONTRACTOR IS RESPONSIBLE TO RELOCATE OR REMOVE FROM WALLS, CEILINGS, FLOOR SPACES, ETC. ANY EXISTING CONDUITS, WIRES, BOXES, FITTINGS, FIXTURES OR OTHER ELECTRICAL EQUIPMENT WHICH INTERFERES WITH PLANNED REMODEL WORK. PROVIDE CIRCUIT CONTINUATION REQUIRED FOR ALL EXISTING OUTLETS, FIXTURES, EQUIPMENT, ETC. SCHEDULED TO REMAIN.
4. NOTIFY THE ENGINEER IMMEDIATELY WHEREVER EXISTING EQUIPMENT IS ENCOUNTERED WHICH MUST BE RELOCATED DUE TO THE NEW CONSTRUCTION, OR NOT INDICATED ON "AS-BUILT" DRAWINGS OR WAS BURIED UNDERGROUND OR EMBEDDED IN STRUCTURE WALLS.
5. CAREFULLY PROTECT ALL WALLS, TRIM, FLOORS, EQUIPMENT, UTILITY LINES AND MATERIALS. WHEN WORKING ON FINISHED SURFACES, LIMIT DAMAGE TO THE SMALLER AREA IF POSSIBLE AND RESTORE TO THE ORIGINAL CONDITION ALL SURFACES WHICH ARE DAMAGED BECAUSE OF THE INSTALLATION OF THIS WORK.
6. EQUIPMENT, MATERIALS AND SUPPLIES TEMPORARILY REMOVED FOR PROTECTION SHALL BE REPLACED IN ORIGINAL LOCATIONS. ANY MATERIALS DAMAGED SHALL BE REPLACED WITH NEW MATERIALS OF LIKE KIND AND QUALITY.
7. DEMOLITION WORK SHALL BE DONE IN A MANNER WHICH WILL NOT CAUSE UNNECESSARY INCONVENIENCE OR DANGER TO USERS OF THE PREMISES AND ADJACENT SITE, AND NOT INTERFERE WITH ITS OPERATION. ANY DEMOLITION WORK TO BE PERFORMED MUST BE PLANNED IN ADVANCE.
8. DO ALL DRILLING, CUTTING, ETC. REQUIRED TO DEMOLISH ELECTRICAL WORK AS INDICATED OR PROVIDE BLANK COVER PLATE ON ALL OUTLETS EXPOSED BY REMOVAL OF FIXTURE OF DEVICES.
9. RESEAL ALL PENETRATIONS OR OPENING THROUGH WALLS, CEILING, FLOORS, ETC., TO MAINTAIN THE RATING OF STRUCTURE.
10. ALL REMOVED MATERIALS AND EQUIPMENT WHICH ARE SALVAGED MATERIALS SHALL REMAIN IN THE PROPERTY OF THE OWNER. DELIVER SUCH SALVAGED MATERIALS AND EQUIPMENT ON THE PREMISES AS DIRECTED BY OWNER AND NEATLY PILE OR STORE AND PROTECT FROM DAMAGE. DISPOSE OF ALL HAZARDOUS MATERIAL PER FEDERAL, STATE AND LOCAL REGULATIONS AND OTHER AGENCIES HAVING JURISDICTION.
11. CONTRACTOR SHALL FIELD VERIFY EXISTING CONDUIT/WIRING RUNS, REUSE AS REQUIRED AND REMOVE ALL UNUSED CONDUIT/WIRING. UNUSED CONDUIT IN INACCESSIBLE LOCATIONS (WALLS TO REMAIN) CAN BE ABANDONED IN PLACE. REMOVE UNUSED WIRING. TO INCLUDE ABANDONED TELEPHONE, DATA AND OTHER LOW VOLTAGE SYSTEMS CABLING AFTER CONFIRMING WITH THE OWNER'S PROJECT MANAGER THAT CABLING IS ABANDONED AND WILL NOT BE RE-USED.
12. CONTRACTOR TO VERIFY CIRCUIT NUMBER AND LOADS FOR ALL EXISTING EQUIPMENT PRIOR TO INSTALLATION OF NEW OR RELOCATED ELECTRICAL EQUIPMENT. REASSIGN CIRCUITS AND LOADS ACCORDINGLY. PROVIDE COMPLETE "AS BUILT" DRAWINGS AND TYPEWRITTEN DIRECTORIES FOR PANELS.
13. WHERE NECESSARY TO SHUT OFF UTILITY SERVICES OR CAUSE INTERRUPTION TO POWER OR SIGNAL SYSTEMS WHILE A BUILDING IS OCCUPIED OR THAT EFFECT ADJACENT BUILDINGS, SCHEDULE OUTAGES OR INTERRUPTIONS WITH THE OWNER, BUILDING OCCUPANTS AND/OR ADJACENT BUILDING OWNER(S) AND OCCUPANTS PRIOR TO CONDUCTING OUTAGE(S) OR INTERRUPTIONS.

SITE PLAN GENERAL NOTES:

1. CONTRACTOR SHALL EXERCISE EXTREME CAUTION IN EXCAVATING AND TRENCHING ON THIS SITE TO AVOID EXISTING DUCTS, PIPING OR CONDUITS, ETC., AND TO PREVENT HAZARDS TO PERSONNEL AND/OR DAMAGE TO EXISTING UNDERGROUND UTILITIES OR STRUCTURES WHETHER OR NOT SHOWN AND INSTALLED BY ANY OTHER CONTRACTS. THE ENGINEER IS NOT RESPONSIBLE FOR THE LOCATION OF UNDERGROUND UTILITIES OR STRUCTURES WHETHER OR NOT SHOWN OR DETAILED AND INSTALLED BY ANY OTHER CONTRACTS. THE CONTRACTOR SHALL IMMEDIATELY NOTIFY THE ENGINEER SHOULD SUCH UNIDENTIFIED CONDITIONS BE DISCOVERED. THESE DRAWINGS AND SPECIFICATIONS DO NOT INCLUDE THE NECESSARY ELEMENTS FOR CONSTRUCTION SAFETY.
2. CALL UNDERGROUND SERVICE ALERT (USA) AT 1 (800) 422-4133 OR APPLICABLE STATE AND LOCAL DIG SAFE OR UNDERGROUND ALERT HOTLINES PRIOR TO CONSTRUCTION START.
3. MINIMUM CONDUIT SIZE SHALL BE 3/4" - U.O.N.
4. MINIMUM CONDUCTOR SIZE SHALL BE #10 AWG. - U.O.N.
5. ALL SITE BRANCH CIRCUITS SHALL INCLUDE A NEC SIZED EQUIPMENT GROUND CONDUCTOR.
6. ALL ELECTRICAL EQUIPMENT MOUNTED OUTDOORS SHALL BE WEATHERPROOF (NEMA #3R).
7. ALL CONDUIT ONLY SHALL BE PROVIDED WITH A NYLON PULL STRING.
8. SEE ARCHITECTURAL/LANDSCAPE ARCHITECTURAL PLANS FOR EXACT LOCATIONS OF FIXTURES, PULLBOXES, MANHOLES, OTHER ELECTRICAL DEVICES, ETC. COORDINATE ALL UNDERGROUND STRUCTURES AND CONDUIT ROUTING WITH LANDSCAPE ARCHITECT PRIOR TO ROUGH-IN TO ENSURE THAT SUCH ITEMS ARE NOT PLACED IN CRITICAL LANDSCAPE PLANTING/HARDSCAPE AREAS.
9. UNLESS SPECIFICALLY SHOWN AS (E), (R), (ER), (D), EXISTING OR NON-BOLD, ALL ELECTRICAL DEVICES SHOWN ARE NEW.
10. PRIOR TO ANY EXCAVATION THE CONTRACTOR SHALL LOCATE AND VERIFY ALL UNDERGROUND UTILITIES BY SCANNING AND POTHOLING AND/OR WHATEVER MEANS NECESSARY.

LEGEND OF CONDUIT SYMBOLS

NO. OF CONDUIT REQUIRED — 1/B — SIZE OF CONDUIT; B = BUILDING INTERCONNECTION

(11) PROVIDE CONNECTION TO THE EXISTING EMS SYSTEM. SEE SPECIAL EMS SYSTEM NOTE ON SHEET MP002 FOR REQUIREMENTS.

NOTES:

1. EXISTING PULLBOX.
2. EXISTING 3"C. AND 2"C. SPARES TO BE USED FOR NEW CABLES. SEE SHEET E-701 FOR MORE INFORMATION.
3. (1)3"C. AND (1)2"C. WITH CABLES AS SPECIFIED. ROUTED ABOVE CEILING.
4. DATA DISTRIBUTION PEDESTAL SEE SPECIFICATIONS.
5. CONDUITS SHALL BE ROUTED UP THE EXTERIOR OF THE BUILDING TO A 24"x24"x12" PULLBOX.
6. ROUTE NEW CABLES AS REQUIRED IN EXISTING SPARE INNERDUCT TO EXISTING IDF.
7. PROVIDE (4) 2"C.O. FROM PEDESTAL TO ACCESSIBLE CEILING SPACE.
8. CONTRACTOR SHALL CORE DRILL FOUNDATION AND SAW CUT FLOOR TO ROUT CONDUITS TO IDF. PATCH FLOOR AS REQUIRED TO MATCH EXISTING AFTER INSTALLATION OF CONDUITS.
9. REMOVE EXISTING RECEPTACLE AND INTERCEPT AND EXTEND CIRCUIT TO PEDESTAL. PROVIDE ALL NECESSARY CONDUIT, WIRE ETC. AS REQUIRED. VERIFY CIRCUIT NUMBER IN FIELD.
10. CONTRACTOR SHALL PULL BACK EXISTING FIBER OPTIC CABLES AND LEAVE COILED IN EXISTING PULLBOX.

architecture
westbergwhite
14471 CHAMBERS RD, SUITE 210
TUSTIN, CA 92780
(714) 508-1780 508-1790 FAX
1775 HANCOCK ST, SUITE 120
SAN DIEGO, CA 92110
(619) 542-1188 542-1663 FAX
719 S. McCLELLAND STREET
SANTA MARIA, CA 93454
(805) 346-2991 346-8750 FAX

CONSULTANT:
tk1sc
COLLABORATIVE
15231 Laguna Canyon Road, Suite 100
Irvine, California 92618
949.751.5800 www.tk1sc.com
Jerry Leonhardt
tk1sc Job #: 2013-0538

PROJECT NAME:

Santa Ana College
Quad and Infrastructure Renovation
1530 West 17th Street
Santa Ana, California 92706

CLIENT:
Rancho Santiago Community College District
2323 North Broadway
Santa Ana, CA 92706

No.	Rev. Date	Description
1	04/14/2015	ADDENDUM 01

JOB NO: 13022.02
DATE: 03/06/2015
DRAWN: MM / RR / RB
CHECK: JG / MM
ARCHITECT: PDW
ENGINEER:
ARCHITECT:

CONSULTANT:
REGISTERED PROFESSIONAL ENGINEER RAYMOND W. SWANSON No. E15610 6/30/15 ELECTRICAL STATE OF CALIFORNIA

STATE:
IDENTIFICATION STAMP DIV. OF THE STATE ARCHITECT OFFICE OF REGULATION SERVICES
APP NO: 04-113798
FILE NO: 30-C2
AC FLS SS
DATE

SHEET DESCRIPTION:
PARTIAL SITE SIGNAL PLAN

SHEET NO:
E-202

SEARCHABLE SET 6-8-2015

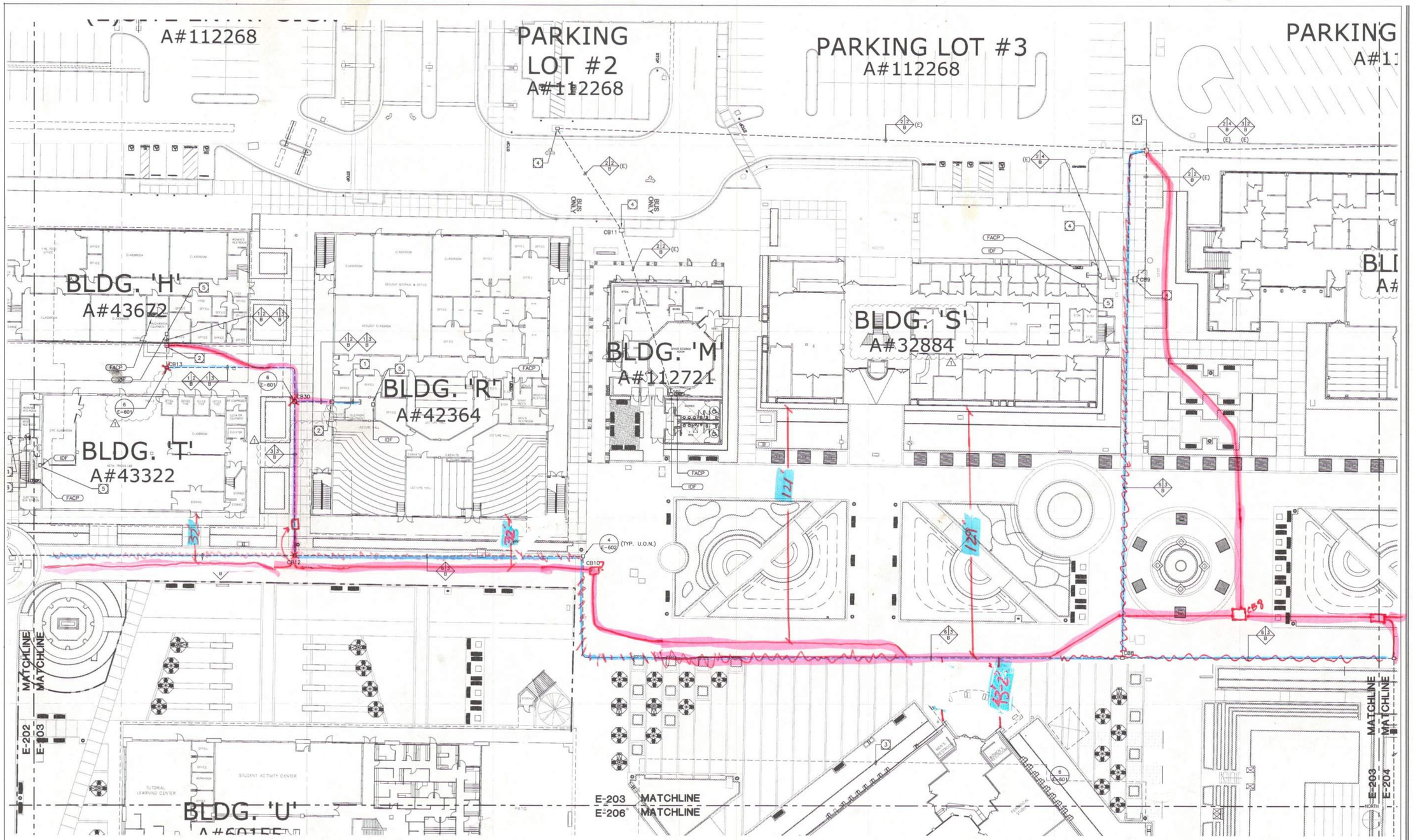

ENLARGED SITE SIGNAL PLAN SCALE: 1"=20'-0" | 1

GENERAL DEMOLITION NOTES:

1. THE ELECTRICAL DRAWINGS ARE DIAGRAMMATIC ONLY. DO NOT SCALE THE ELECTRICAL DRAWINGS TO DETERMINE THE LOCATION OF EQUIPMENT OR OUTLETS. SEE ARCHITECTURAL PLANS, WHERE PROVIDED ON PROJECT, FOR EXTENT OF DEMOLITION.
2. THE EXISTING CONDITIONS SHOWN ARE FROM AVAILABLE RECORD DRAWINGS AND SHOWN FOR REFERENCE ONLY. CONTRACTOR SHALL VERIFY ACTUAL EXISTING CONDITIONS AT SITE PRIOR TO SUBMITTING BID. ALL DEMOLITION, ALTERATION, EXTENSION, RELOCATION, REHABILITATION WORK SHALL BE INCLUDED IN CONTRACT. NO ADDITIONAL ALLOWANCE OR CHANGE ORDERS WILL BE ACCEPTED.
3. CONTRACTOR IS RESPONSIBLE TO RELOCATE OR REMOVE FROM WALLS, CEILINGS, FLOOR SPACES, ETC. ANY EXISTING CONDUITS, WIRES, BOXES, FITTINGS, FIXTURES OR OTHER ELECTRICAL EQUIPMENT WHICH INTERFERES WITH PLANNED REMODEL WORK. PROVIDE CIRCUIT CONTINUATION REQUIRED FOR ALL EXISTING OUTLETS, FIXTURES, EQUIPMENT, ETC. SCHEDULED TO REMAIN.
4. NOTIFY THE ENGINEER IMMEDIATELY WHEREVER EXISTING EQUIPMENT IS ENCOUNTERED WHICH MUST BE RELOCATED DUE TO THE NEW CONSTRUCTION, OR NOT INDICATED ON "AS-BUILT" DRAWINGS OR WAS BURIED UNDERGROUND OR EMBEDDED IN STRUCTURE WALLS.
5. CAREFULLY PROTECT ALL WALLS, TRIM, FLOORS, EQUIPMENT, UTILITY LINES AND MATERIALS. WHEN WORKING ON FINISHED SURFACES, LIMIT DAMAGE TO THE SMALLER AREA IF POSSIBLE AND RESTORE TO THE ORIGINAL CONDITION ALL SURFACES WHICH ARE DAMAGED BECAUSE OF THE INSTALLATION OF THIS WORK.
6. EQUIPMENT, MATERIALS AND SUPPLIES TEMPORARILY REMOVED FOR PROTECTION SHALL BE REPLACED IN ORIGINAL LOCATIONS. ANY MATERIALS DAMAGED SHALL BE REPLACED WITH NEW MATERIALS OF LIKE KIND AND QUALITY.
7. DEMOLITION WORK SHALL BE DONE IN A MANNER WHICH WILL NOT CAUSE UNNECESSARY INCONVENIENCE OR DANGER TO USERS OF THE PREMISES AND ADJACENT SITE, AND NOT INTERFERE WITH ITS OPERATION. ANY DEMOLITION WORK TO BE PERFORMED MUST BE PLANNED IN ADVANCE.
8. DO ALL DRILLING, CUTTING, ETC. REQUIRED TO DEMOLISH ELECTRICAL WORK AS INDICATED OR PROVIDE BLANK COVER PLATE ON ALL OUTLETS EXPOSED BY REMOVAL OF FIXTURE OF DEVICES.
9. RESEAL ALL PENETRATIONS OR OPENING THROUGH WALLS, CEILING, FLOORS, ETC., TO MAINTAIN THE RATING OF STRUCTURE.
10. ALL REMOVED MATERIALS AND EQUIPMENT WHICH ARE SALVAGED MATERIALS SHALL REMAIN IN THE PROPERTY OF THE OWNER. DELIVER SUCH SALVAGED MATERIALS AND EQUIPMENT ON THE PREMISES AS DIRECTED BY OWNER AND NEATLY PILE OR STORE AND PROTECT FROM DAMAGE. DISPOSE OF ALL HAZARDOUS MATERIAL PER FEDERAL, STATE AND LOCAL REGULATIONS AND OTHER AGENCIES HAVING JURISDICTION.
11. CONTRACTOR SHALL FIELD VERIFY EXISTING CONDUIT/WIRING RUNS, REUSE AS REQUIRED AND REMOVE ALL UNUSED CONDUIT/WIRING. UNUSED CONDUIT IN INACCESSIBLE LOCATIONS (WALLS TO REMAIN) CAN BE ABANDONED IN PLACE. REMOVE UNUSED WIRING. TO INCLUDE ABANDONED TELEPHONE, DATA AND OTHER LOW VOLTAGE SYSTEMS CABLING AFTER CONFIRMING WITH THE OWNER'S PROJECT MANAGER THAT CABLING IS ABANDONED AND WILL NOT BE RE-USED.
12. CONTRACTOR TO VERIFY CIRCUIT NUMBER AND LOADS FOR ALL EXISTING EQUIPMENT PRIOR TO INSTALLATION OF NEW OR RELOCATED ELECTRICAL EQUIPMENT. REASSIGN CIRCUITS AND LOADS ACCORDINGLY. PROVIDE COMPLETE "AS BUILT" DRAWINGS AND TYPEWRITTEN DIRECTORIES FOR PANELS.
13. WHERE NECESSARY TO SHUT OFF UTILITY SERVICES OR CAUSE INTERRUPTION TO POWER OR SIGNAL SYSTEMS WHILE A BUILDING IS OCCUPIED OR THAT EFFECT ADJACENT BUILDINGS, SCHEDULE OUTAGES OR INTERRUPTIONS WITH THE OWNER, BUILDING OCCUPANTS AND/OR ADJACENT BUILDING OWNER(S) AND OCCUPANTS PRIOR TO CONDUCTING OUTAGE(S) OR INTERRUPTIONS.

SITE PLAN GENERAL NOTES:

1. CONTRACTOR SHALL EXERCISE EXTREME CAUTION IN EXCAVATING AND TRENCHING ON THIS SITE TO AVOID EXISTING DUCTS, PIPING OR CONDUITS, ETC., AND TO PREVENT HAZARDS TO PERSONNEL AND/OR DAMAGE TO EXISTING UNDERGROUND UTILITIES OR STRUCTURES WHETHER OR NOT SHOWN AND INSTALLED BY ANY OTHER CONTRACTS. THE ENGINEER IS NOT RESPONSIBLE FOR THE LOCATION OF UNDERGROUND UTILITIES OR STRUCTURES WHETHER OR NOT SHOWN OR DETAILED AND INSTALLED BY ANY OTHER CONTRACTS. THE CONTRACTOR SHALL IMMEDIATELY NOTIFY THE ENGINEER SHOULD SUCH UNIDENTIFIED CONDITIONS BE DISCOVERED. THESE DRAWINGS AND SPECIFICATIONS DO NOT INCLUDE THE NECESSARY ELEMENTS FOR CONSTRUCTION SAFETY.
2. CALL UNDERGROUND SERVICE ALERT (USA) AT 1 (800) 422-4133 OR APPLICABLE STATE AND LOCAL DIG SAFE OR UNDERGROUND ALERT HOTLINES PRIOR TO CONSTRUCTION START.
3. MINIMUM CONDUIT SIZE SHALL BE 3/4" - U.O.N.
4. MINIMUM CONDUCTOR SIZE SHALL BE #10 AWG. - U.O.N.
5. ALL SITE BRANCH CIRCUITS SHALL INCLUDE A NEC SIZED EQUIPMENT GROUND CONDUCTOR.
6. ALL ELECTRICAL EQUIPMENT MOUNTED OUTDOORS SHALL BE WEATHERPROOF (NEMA #3R).
7. ALL CONDUIT ONLY SHALL BE PROVIDED WITH A NYLON PULL STRING.
8. SEE ARCHITECTURAL/LANDSCAPE ARCHITECTURAL PLANS FOR EXACT LOCATIONS OF FIXTURES, PULLBOXES, MANHOLES, OTHER ELECTRICAL DEVICES, ETC. COORDINATE ALL UNDERGROUND STRUCTURES AND CONDUIT ROUTING WITH LANDSCAPE ARCHITECT PRIOR TO ROUGH-IN TO ENSURE THAT SUCH ITEMS ARE NOT PLACED IN CRITICAL LANDSCAPE PLANTING/HARDSCAPE AREAS.
9. UNLESS SPECIFICALLY SHOWN AS (E), (R), (ER), (D), EXISTING OR NON-BOLD, ALL ELECTRICAL DEVICES SHOWN ARE NEW.
10. PRIOR TO ANY EXCAVATION THE CONTRACTOR SHALL LOCATE AND VERIFY ALL UNDERGROUND UTILITIES BY SCANNING AND POTHOLING AND/OR WHATEVER MEANS NECESSARY.

LEGEND OF CONDUIT SYMBOLS

NO. OF CONDUIT REQUIRED — SIZE OF CONDUIT; B = BUILDING INTERCONNECTION

NOTES:

1. (1)3"C. AND (1)2"C. WITH CABLES AS SPECIFIED ROUTED ABOVE CEILING
2. CONDUITS SHALL BE ROUTED UP THE EXTERIOR OF THE BUILDING TO A 24"x24"x12" PULLBOX.
3. OUTLINE OF FUTURE BUILDING.
4. EXISTING PULLBOX.
5. PROVIDE CONNECTION TO THE EXISTING EMS SYSTEM. SEE SPECIAL EMS SYSTEM NOTE ON SHEET MP002 FOR REQUIREMENTS.

SEARCHABLE SET 6-8-2015

architecture
westbergwhite
14471 CHAMBERS RD, SUITE 210
TUSTIN, CA 92780
(714) 508-1780 508-1790 FAX
1775 HANCOCK ST, SUITE 120
SAN DIEGO, CA 92110
(619) 542-1188 542-1653 FAX
719 S. McCLELLAND STREET
SANTA MARIA, CA 93454
(805) 346-2991 346-8790 FAX

CONSULTANT:
tk|sc
COLLABORATIVE
15231 Laguna Canyon Road, Suite 100
Irvine, California 92618
949.751.5800 www.tksc.com
Jerry Leonhardt
tksc Job #: 2013-0638

PROJECT NAME:

Santa Ana College
Quad and Infrastructure Renovation
1530 West 17th Street
Santa Ana, California 92706

60 x 90 x 96
60 x 45 x 56

CLIENT:
Rancho Santiago Community College District
2323 North Broadway
Santa Ana, CA 92706

No.	Rev. Date	Description
1	04/14/2015	ADDENDUM 01

JOB NO: 13022.02
DATE: 03/06/2015
DRAWN: MM / RR / RB
CHECK: JG / MM
ARCHITECT: PDW
ENGINEER:
ARCHITECT:

CONSULTANT:

REGISTERED PROFESSIONAL ENGINEER RAYMOND W. SWAN No. E15610 ELECTRICAL STATE OF CALIFORNIA 3/31/15

STATE:

IDENTIFICATION STAMP
ENV. OF THE STATE ARCHITECT,
OFFICE OF REGULATION SERVICES
APP NO: 04-113798
FILE NO: 30-C2
AC ____ FLS ____ SS ____
DATE ____

SHEET DESCRIPTION:
PARTIAL SITE SIGNAL PLAN

SHEET NO:
E-203

\\RSTUDIO\Jobs\08-ECC\Santa Ana College - Central Plant Design\CAD\Archive\Archive\2015-03-06\E-203 2 ENLARGED SITE SIGNAL PLAN.dwg, 4/13/2015 1:58:21 PM

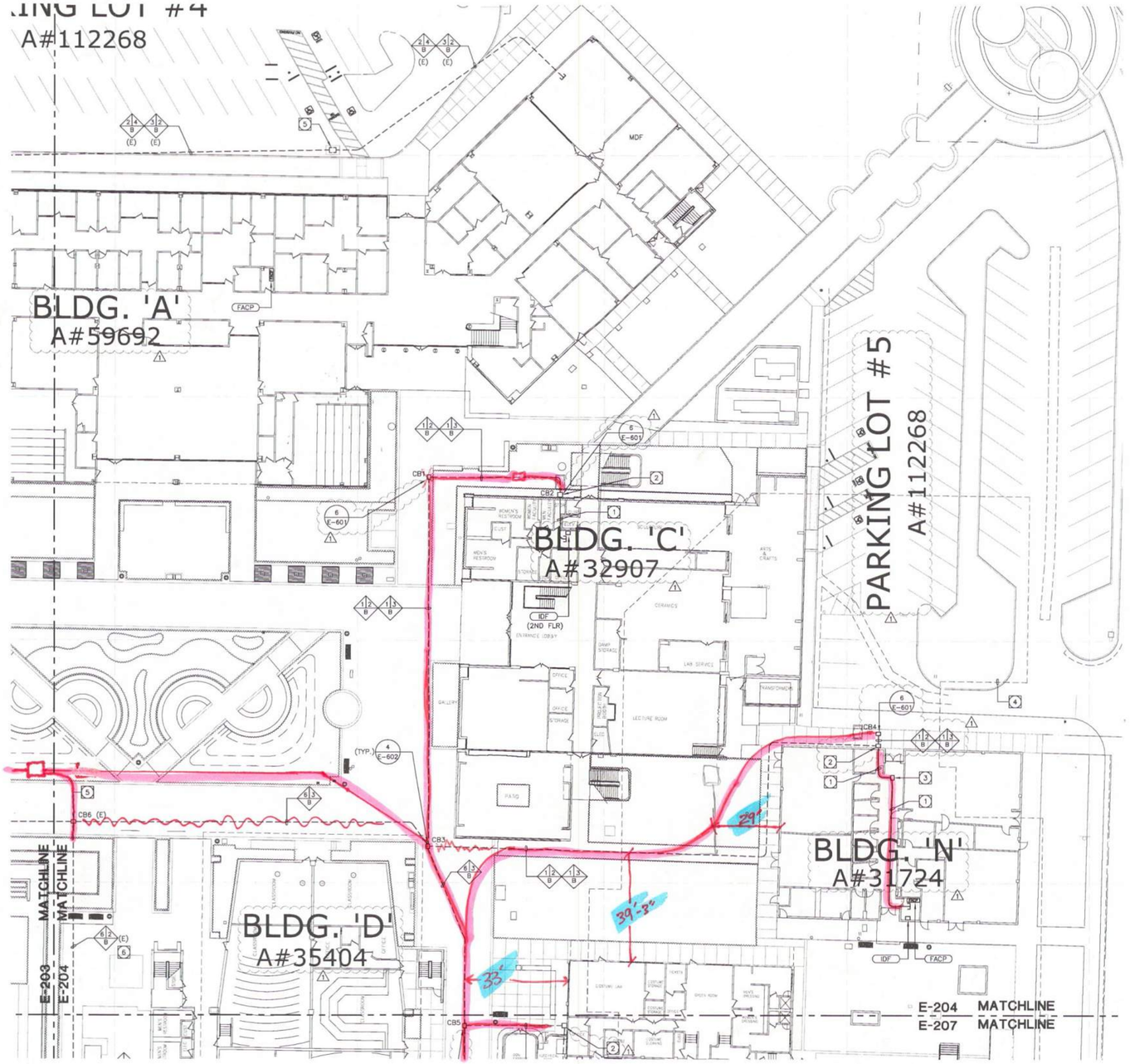

ENLARGED SITE SIGNAL PLAN SCALE: 1"=20'-0" 1

GENERAL DEMOLITION NOTES:

1. THE ELECTRICAL DRAWINGS ARE DIAGRAMMATIC ONLY. DO NOT SCALE THE ELECTRICAL DRAWINGS TO DETERMINE THE LOCATION OF EQUIPMENT OR OUTLETS. SEE ARCHITECTURAL PLANS, WHERE PROVIDED ON PROJECT, FOR EXTENT OF DEMOLITION.
2. THE EXISTING CONDITIONS SHOWN ARE FROM AVAILABLE RECORD DRAWINGS AND SHOWN FOR REFERENCE ONLY. CONTRACTOR SHALL VERIFY ACTUAL EXISTING CONDITIONS AT SITE PRIOR TO SUBMITTING BID. ALL DEMOLITION, ALTERATION, EXTENSION, RELOCATION, REHABILITATION WORK SHALL BE INCLUDED IN CONTRACT. NO ADDITIONAL ALLOWANCE OR CHANGE ORDERS WILL BE ACCEPTED.
3. CONTRACTOR IS RESPONSIBLE TO RELOCATE OR REMOVE FROM WALLS, CEILINGS, FLOOR SPACES, ETC. ANY EXISTING CONDUITS, WIRES, BOXES, FITTINGS, FIXTURES OR OTHER ELECTRICAL EQUIPMENT WHICH INTERFERES WITH PLANNED REMODEL WORK. PROVIDE CIRCUIT CONTINUATION REQUIRED FOR ALL EXISTING OUTLETS, FIXTURES, EQUIPMENT, ETC. SCHEDULED TO REMAIN.
4. NOTIFY THE ENGINEER IMMEDIATELY WHEREVER EXISTING EQUIPMENT IS ENCOUNTERED WHICH MUST BE RELOCATED DUE TO THE NEW CONSTRUCTION, OR NOT INDICATED ON "AS-BUILT" DRAWINGS OR WAS BURIED UNDERGROUND OR EMBEDDED IN STRUCTURE WALLS.
5. CAREFULLY PROTECT ALL WALLS, TRIM, FLOORS, EQUIPMENT, UTILITY LINES AND MATERIALS. WHEN WORKING ON FINISHED SURFACES, LIMIT DAMAGE TO THE SMALLER AREA IF POSSIBLE AND RESTORE TO THE ORIGINAL CONDITION ALL SURFACES WHICH ARE DAMAGED BECAUSE OF THE INSTALLATION OF THIS WORK.
6. EQUIPMENT, MATERIALS AND SUPPLIES TEMPORARILY REMOVED FOR PROTECTION SHALL BE REPLACED IN ORIGINAL LOCATIONS. ANY MATERIALS DAMAGED SHALL BE REPLACED WITH NEW MATERIALS OF LIKE KIND AND QUALITY.
7. DEMOLITION WORK SHALL BE DONE IN A MANNER WHICH WILL NOT CAUSE UNNECESSARY INCONVENIENCE OR DANGER TO USERS OF THE PREMISES AND ADJACENT SITE, AND NOT INTERFERE WITH ITS OPERATION. ANY DEMOLITION WORK TO BE PERFORMED MUST BE PLANNED IN ADVANCE.
8. DO ALL DRILLING, CUTTING, ETC. REQUIRED TO DEMOLISH ELECTRICAL WORK AS INDICATED OR PROVIDE BLANK COVER PLATE ON ALL OUTLETS EXPOSED BY REMOVAL OF FIXTURE OF DEVICES.
9. RESEAL ALL PENETRATIONS OR OPENING THROUGH WALLS, CEILING, FLOORS, ETC., TO MAINTAIN THE RATING OF STRUCTURE.
10. ALL REMOVED MATERIALS AND EQUIPMENT WHICH ARE SALVAGED MATERIALS SHALL REMAIN IN THE PROPERTY OF THE OWNER. DELIVER SUCH SALVAGED MATERIALS AND EQUIPMENT ON THE PREMISES AS DIRECTED BY OWNER AND NEATLY PILE OR STORE AND PROTECT FROM DAMAGE. DISPOSE OF ALL HAZARDOUS MATERIAL PER FEDERAL, STATE AND LOCAL REGULATIONS AND OTHER AGENCIES HAVING JURISDICTION.
11. CONTRACTOR SHALL FIELD VERIFY EXISTING CONDUIT/WIRING RUNS, REUSE AS REQUIRED AND REMOVE ALL UNUSED CONDUIT/WIRING. UNUSED CONDUIT IN INACCESSIBLE LOCATIONS (WALLS TO REMAIN) CAN BE ABANDONED IN PLACE. REMOVE UNUSED WIRING. TO INCLUDE ABANDONED TELEPHONE, DATA AND OTHER LOW VOLTAGE SYSTEMS CABLING AFTER CONFIRMING WITH THE OWNER'S PROJECT MANAGER THAT CABLING IS ABANDONED AND WILL NOT BE RE-USED.
12. CONTRACTOR TO VERIFY CIRCUIT NUMBER AND LOADS FOR ALL EXISTING EQUIPMENT PRIOR TO INSTALLATION OF NEW OR RELOCATED ELECTRICAL EQUIPMENT. REASSIGN CIRCUITS AND LOADS ACCORDINGLY. PROVIDE COMPLETE "AS BUILT" DRAWINGS AND TYPEWRITTEN DIRECTORIES FOR PANELS.
13. WHERE NECESSARY TO SHUT OFF UTILITY SERVICES OR CAUSE INTERRUPTION TO POWER OR SIGNAL SYSTEMS WHILE A BUILDING IS OCCUPIED OR THAT EFFECT ADJACENT BUILDINGS, SCHEDULE OUTAGES OR INTERRUPTIONS WITH THE OWNER, BUILDING OCCUPANTS AND/OR ADJACENT BUILDING OWNER(S) AND OCCUPANTS PRIOR TO CONDUCTING OUTAGE(S) OR INTERRUPTIONS.

SITE PLAN GENERAL NOTES:

1. CONTRACTOR SHALL EXERCISE EXTREME CAUTION IN EXCAVATING AND TRENCHING ON THIS SITE TO AVOID EXISTING DUCTS, PIPING OR CONDUITS, ETC., AND TO PREVENT HAZARDS TO PERSONNEL AND/OR DAMAGE TO EXISTING UNDERGROUND UTILITIES OR STRUCTURES WHETHER OR NOT SHOWN AND INSTALLED BY ANY OTHER CONTRACTS. THE ENGINEER IS NOT RESPONSIBLE FOR THE LOCATION OF UNDERGROUND UTILITIES OR STRUCTURES WHETHER OR NOT SHOWN OR DETAILED AND INSTALLED BY ANY OTHER CONTRACTS. THE CONTRACTOR SHALL IMMEDIATELY NOTIFY THE ENGINEER SHOULD SUCH UNIDENTIFIED CONDITIONS BE DISCOVERED. THESE DRAWINGS AND SPECIFICATIONS DO NOT INCLUDE THE NECESSARY ELEMENTS FOR CONSTRUCTION SAFETY.
2. CALL UNDERGROUND SERVICE ALERT (USA) AT 1 (800) 422-4133 OR APPLICABLE STATE AND LOCAL DIG SAFE OR UNDERGROUND ALERT HOTLINES PRIOR TO CONSTRUCTION START.
3. MINIMUM CONDUIT SIZE SHALL BE 3/4" - U.O.N.
4. MINIMUM CONDUCTOR SIZE SHALL BE #10 AWG. - U.O.N.
5. ALL SITE BRANCH CIRCUITS SHALL INCLUDE A NEC SIZED EQUIPMENT GROUND CONDUCTOR.
6. ALL ELECTRICAL EQUIPMENT MOUNTED OUTDOORS SHALL BE WEATHERPROOF (NEMA #3R).
7. ALL CONDUIT ONLY SHALL BE PROVIDED WITH A NYLON PULL STRING.
8. SEE ARCHITECTURAL/LANDSCAPE ARCHITECTURAL PLANS FOR EXACT LOCATIONS OF FIXTURES, PULLBOXES, MANHOLES, OTHER ELECTRICAL DEVICES, ETC. COORDINATE ALL UNDERGROUND STRUCTURES AND CONDUIT ROUTING WITH LANDSCAPE ARCHITECT PRIOR TO ROUGH-IN TO ENSURE THAT SUCH ITEMS ARE NOT PLACED IN CRITICAL LANDSCAPE PLANTING/HARDSCAPE AREAS.
9. UNLESS SPECIFICALLY SHOWN AS (E), (R), (ER), (D), EXISTING OR NON-BOLD, ALL ELECTRICAL DEVICES SHOWN ARE NEW.
10. PRIOR TO ANY EXCAVATION THE CONTRACTOR SHALL LOCATE AND VERIFY ALL UNDERGROUND UTILITIES BY SCANNING AND POTHOLING AND/OR WHATEVER MEANS NECESSARY.

LEGEND OF CONDUIT SYMBOLS

NO. OF CONDUIT REQUIRED — 2/4 B (E) — SIZE OF CONDUIT; B = BUILDING INTERCONNECTION

NOTES:

1. (1)3"C. AND (1)2"C. WITH CABLES AS SPECIFIED ROUTED ABOVE CEILING.
2. CONDUITS SHALL BE ROUTED UP THE EXTERIOR OF THE BUILDING TO A 24"x24"x12" PULLBOX.
3. 24"x24" PULLBOX MOUNTED ABOVE CEILING.
4. OUTLINE OF FUTURE BUILDING.
5. EXISTING PULLBOX.
6. EXISTING 2"C. SPARES TO BE USED FOR NEW CABLES. SEE SHEET E-701 FOR MORE INFORMATION.

SEARCHABLE SET 6-8-2015

architecture
westbergwhite
14471 CHAMBERS RD, SUITE 210
TUSTIN, CA 92780
(714) 508-1780 508-1790 FAX
1775 HANCOCK ST, SUITE 120
SAN DIEGO, CA 92110
(619) 542-1188 542-1663 FAX
719 S. McCLELLAND STREET
SANTA MARIA, CA 93454
(805) 346-2991 346-8790 FAX

CONSULTANT:
tk1sc
COLLABORATIVE
15231 Laguna Canyon Road, Suite 100
Irvine, California 92618
949.751.5800 www.tk1sc.com
Jerry Leonhardt
tk1sc Job #: 2013-0538

PROJECT NAME:

Santa Ana College
Quad and Infrastructure Renovation
1530 West 17th Street
Santa Ana, California 92706

CLIENT:
Rancho Santiago Community College District
2323 North Broadway
Santa Ana, CA 92706

No.	Rev. Date	Description
1	04/14/2015	ADDENDUM 01

JOB NO: 13022.02
DATE: 03/06/2015
DRAWN: MM / RR / RB
CHECK: JG / MM
ARCHITECT: PDW
ENGINEER:
ARCHITECT:

CONSULTANT:
REGISTERED PROFESSIONAL ENGINEER RAYMOND W. SWAYZE No. E15610 ELECTRICAL STATE OF CALIFORNIA 4/29/15

STATE:
IDENTIFICATION STAMP DIV. OF THE STATE ARCHITECT OFFICE OF REGULATION SERVICES
APP NO: 04-113798
FILE NO: 30-C2
AC ____ FLS ____ SS ____
DATE ____

SHEET DESCRIPTION:
PARTIAL SITE SIGNAL PLAN

SHEET NO:
E-204

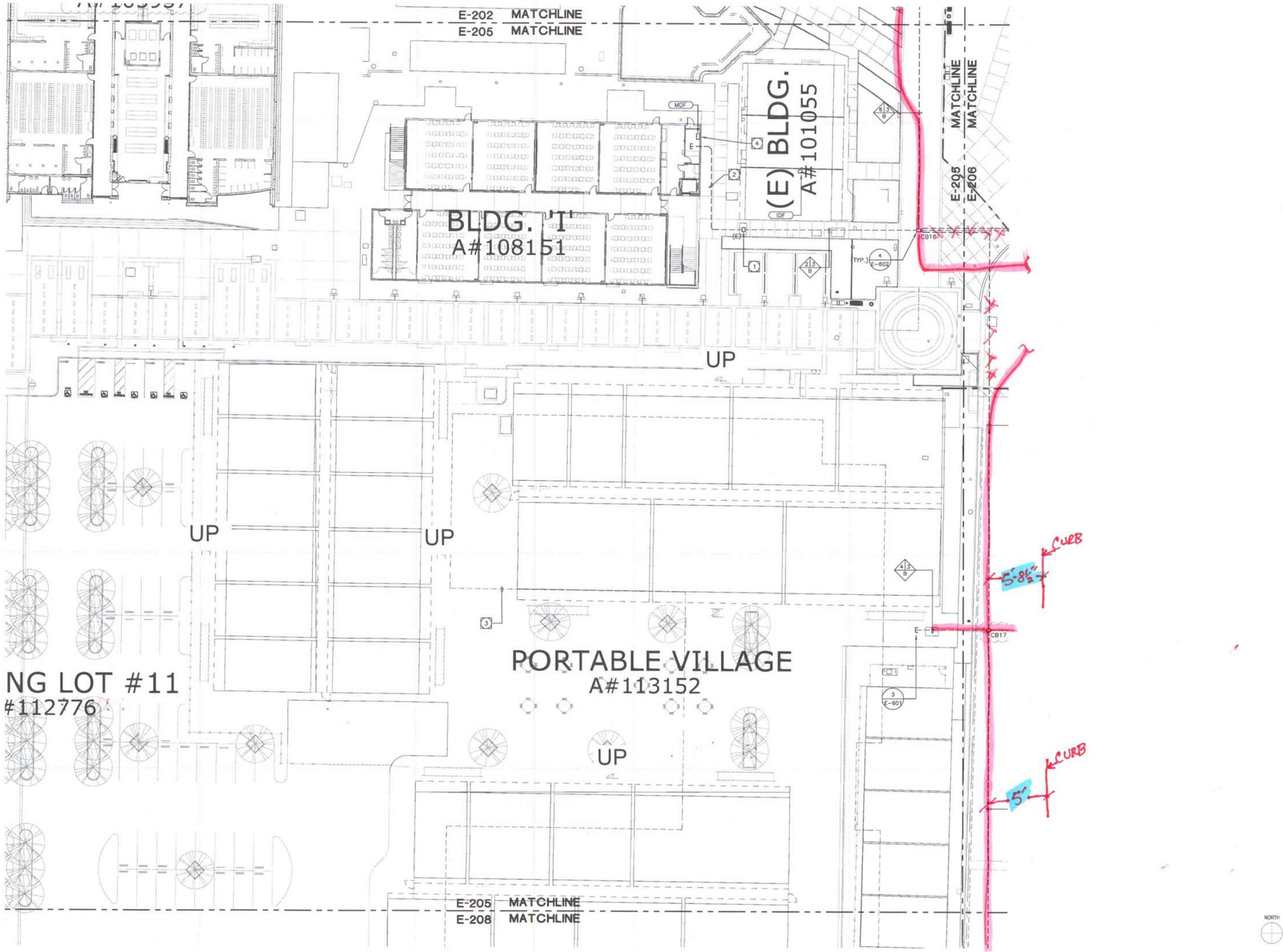

ENLARGED SITE SIGNAL PLAN SCALE: 1"=20'-0" 1

GENERAL DEMOLITION NOTES:

1. THE ELECTRICAL DRAWINGS ARE DIAGRAMMATIC ONLY. DO NOT SCALE THE ELECTRICAL DRAWINGS TO DETERMINE THE LOCATION OF EQUIPMENT OR OUTLETS. SEE ARCHITECTURAL PLANS, WHERE PROVIDED ON PROJECT, FOR EXTENT OF DEMOLITION.
2. THE EXISTING CONDITIONS SHOWN ARE FROM AVAILABLE RECORD DRAWINGS AND SHOWN FOR REFERENCE ONLY. CONTRACTOR SHALL VERIFY ACTUAL EXISTING CONDITIONS AT SITE PRIOR TO SUBMITTING BID. ALL DEMOLITION, ALTERATION, EXTENSION, RELOCATION, REHABILITATION WORK SHALL BE INCLUDED IN CONTRACT. NO ADDITIONAL ALLOWANCE OR CHANGE ORDERS WILL BE ACCEPTED.
3. CONTRACTOR IS RESPONSIBLE TO RELOCATE OR REMOVE FROM WALLS, CEILINGS, FLOOR SPACES, ETC. ANY EXISTING CONDUITS, WIRES, BOXES, FITTINGS, FIXTURES OR OTHER ELECTRICAL EQUIPMENT WHICH INTERFERES WITH PLANNED REMODEL WORK. PROVIDE CIRCUIT CONTINUATION REQUIRED FOR ALL EXISTING OUTLETS, FIXTURES, EQUIPMENT, ETC. SCHEDULED TO REMAIN.
4. NOTIFY THE ENGINEER IMMEDIATELY WHEREVER EXISTING EQUIPMENT IS ENCOUNTERED WHICH MUST BE RELOCATED DUE TO THE NEW CONSTRUCTION, OR NOT INDICATED ON "AS-BUILT" DRAWINGS OR WAS BURIED UNDERGROUND OR EMBEDDED IN STRUCTURE WALLS.
5. CAREFULLY PROTECT ALL WALLS, TRIM, FLOORS, EQUIPMENT, UTILITY LINES AND MATERIALS. WHEN WORKING ON FINISHED SURFACES, LIMIT DAMAGE TO THE SMALLER AREA IF POSSIBLE AND RESTORE TO THE ORIGINAL CONDITION ALL SURFACES WHICH ARE DAMAGED BECAUSE OF THE INSTALLATION OF THIS WORK.
6. EQUIPMENT, MATERIALS AND SUPPLIES TEMPORARILY REMOVED FOR PROTECTION SHALL BE REPLACED IN ORIGINAL LOCATIONS. ANY MATERIALS DAMAGED SHALL BE REPLACED WITH NEW MATERIALS OF LIKE KIND AND QUALITY.
7. DEMOLITION WORK SHALL BE DONE IN A MANNER WHICH WILL NOT CAUSE UNNECESSARY INCONVENIENCE OR DANGER TO USERS OF THE PREMISES AND ADJACENT SITE, AND NOT INTERFERE WITH ITS OPERATION. ANY DEMOLITION WORK TO BE PERFORMED MUST BE PLANNED IN ADVANCE.
8. DO ALL DRILLING, CUTTING, ETC. REQUIRED TO DEMOLISH ELECTRICAL WORK AS INDICATED OR PROVIDE BLANK COVER PLATE ON ALL OUTLETS EXPOSED BY REMOVAL OF FIXTURE OF DEVICES.
9. RESEAL ALL PENETRATIONS OR OPENING THROUGH WALLS, CEILING, FLOORS, ETC., TO MAINTAIN THE RATING OF STRUCTURE.
10. ALL REMOVED MATERIALS AND EQUIPMENT WHICH ARE SALVAGED MATERIALS SHALL REMAIN IN THE PROPERTY OF THE OWNER. DELIVER SUCH SALVAGED MATERIALS AND EQUIPMENT ON THE PREMISES AS DIRECTED BY OWNER AND NEATLY PILE OR STORE AND PROTECT FROM DAMAGE. DISPOSE OF ALL HAZARDOUS MATERIAL PER FEDERAL, STATE AND LOCAL REGULATIONS AND OTHER AGENCIES HAVING JURISDICTION.
11. CONTRACTOR SHALL FIELD VERIFY EXISTING CONDUIT/WIRING RUNS, REUSE AS REQUIRED AND REMOVE ALL UNUSED CONDUIT/WIRING. UNUSED CONDUIT IN INACCESSIBLE LOCATIONS (WALLS TO REMAIN) CAN BE ABANDONED IN PLACE. REMOVE UNUSED WIRING. TO INCLUDE ABANDONED TELEPHONE, DATA AND OTHER LOW VOLTAGE SYSTEMS CABLING AFTER CONFIRMING WITH THE OWNER'S PROJECT MANAGER THAT CABLING IS ABANDONED AND WILL NOT BE RE-USED.
12. CONTRACTOR TO VERIFY CIRCUIT NUMBER AND LOADS FOR ALL EXISTING EQUIPMENT PRIOR TO INSTALLATION OF NEW OR RELOCATED ELECTRICAL EQUIPMENT. REASSIGN CIRCUITS AND LOADS ACCORDINGLY. PROVIDE COMPLETE "AS BUILT" DRAWINGS AND TYPEWRITTEN DIRECTORIES FOR PANELS.
13. WHERE NECESSARY TO SHUT OFF UTILITY SERVICES OR CAUSE INTERRUPTION TO POWER OR SIGNAL SYSTEMS WHILE A BUILDING IS OCCUPIED OR THAT EFFECT ADJACENT BUILDINGS, SCHEDULE OUTAGES OR INTERRUPTIONS WITH THE OWNER, BUILDING OCCUPANTS AND/OR ADJACENT BUILDING OWNER(S) AND OCCUPANTS PRIOR TO CONDUCTING OUTAGE(S) OR INTERRUPTIONS.

SITE PLAN GENERAL NOTES:

1. CONTRACTOR SHALL EXERCISE EXTREME CAUTION IN EXCAVATING AND TRENCHING ON THIS SITE TO AVOID EXISTING DUCTS, PIPING OR CONDUITS, ETC., AND TO PREVENT HAZARDS TO PERSONNEL AND/OR DAMAGE TO EXISTING UNDERGROUND UTILITIES OR STRUCTURES WHETHER OR NOT SHOWN AND INSTALLED BY ANY OTHER CONTRACTS. THE ENGINEER IS NOT RESPONSIBLE FOR THE LOCATION OF UNDERGROUND UTILITIES OR STRUCTURES WHETHER OR NOT SHOWN OR DETAILED AND INSTALLED BY ANY OTHER CONTRACTS. THE CONTRACTOR SHALL IMMEDIATELY NOTIFY THE ENGINEER SHOULD SUCH UNIDENTIFIED CONDITIONS BE DISCOVERED. THESE DRAWINGS AND SPECIFICATIONS DO NOT INCLUDE THE NECESSARY ELEMENTS FOR CONSTRUCTION SAFETY.
2. CALL UNDERGROUND SERVICE ALERT (USA) AT 1 (800) 422-4133 OR APPLICABLE STATE AND LOCAL DIG SAFE OR UNDERGROUND ALERT HOTLINES PRIOR TO CONSTRUCTION START.
3. MINIMUM CONDUIT SIZE SHALL BE 3/4" - U.O.N.
4. MINIMUM CONDUCTOR SIZE SHALL BE #10 AWG. - U.O.N.
5. ALL SITE BRANCH CIRCUITS SHALL INCLUDE A NEC SIZED EQUIPMENT GROUND CONDUCTOR.
6. ALL ELECTRICAL EQUIPMENT MOUNTED OUTDOORS SHALL BE WEATHERPROOF (NEMA #3R).
7. ALL CONDUIT ONLY SHALL BE PROVIDED WITH A NYLON PULL STRING.
8. SEE ARCHITECTURAL/LANDSCAPE ARCHITECTURAL PLANS FOR EXACT LOCATIONS OF FIXTURES, PULLBOXES, MANHOLES, OTHER ELECTRICAL DEVICES, ETC. COORDINATE ALL UNDERGROUND STRUCTURES AND CONDUIT ROUTING WITH LANDSCAPE ARCHITECT PRIOR TO ROUGH-IN TO ENSURE THAT SUCH ITEMS ARE NOT PLACED IN CRITICAL LANDSCAPE PLANTING/HARDSCAPE AREAS.
9. UNLESS SPECIFICALLY SHOWN AS (E), (R), (ER), (D), EXISTING OR NON-BOLD, ALL ELECTRICAL DEVICES SHOWN ARE NEW.
10. PRIOR TO ANY EXCAVATION THE CONTRACTOR SHALL LOCATE AND VERIFY ALL UNDERGROUND UTILITIES BY SCANNING AND POTHOLING AND/OR WHATEVER MEANS NECESSARY.

LEGEND OF CONDUIT SYMBOLS

NO. OF CONDUIT REQUIRED — 4/B — SIZE OF CONDUIT; B = BUILDING INTERCONNECTION

NOTES:

1. EXISTING PULLBOX.
2. EXISTING 3"C. AND 2"C. SPARES TO BE USED FOR NEW CABLES. SEE SHEET E-701 FOR MORE INFORMATION.
3. OUTLINE OF FUTURE BUILDING.
4. PROVIDE CONNECTION TO THE EXISTING EMS SYSTEM. SEE SPECIAL EMS SYSTEM NOTE ON SHEET MP002 FOR REQUIREMENTS.

SEARCHABLE SET 6-8-2015

architecture
westbergwhite
14471 CHAMBERS RD, SUITE 210
TUSTIN, CA 92780
(714) 508-1780 508-1790 FAX
1775 HANCOCK ST, SUITE 120
SAN DIEGO, CA 92110
(619) 542-1188 542-1663 FAX
719 S. McCLELLAND STREET
SANTA MARIA, CA 93454
(805) 346-2991 346-8790 FAX

CONSULTANT:
tk1sc
COLLABORATIVE
15231 Laguna Canyon Road, Suite 100
Irvine, California 92618
949.751.5800 www.tk1sc.com
Jerry Leonhardt
tk1sc Job #: 2013-0536

PROJECT NAME:

Santa Ana College
Quad and Infrastructure Renovation
1530 West 17th Street
Santa Ana, California 92706

CLIENT:
Rancho Santiago Community College District
2323 North Broadway
Santa Ana, CA 92706

No.	Rev. Date	Description
1	04/14/2015	ADDENDUM 01

JOB NO: 13022.02
DATE: 03/06/2015
DRAWN: MM / RR / RB
CHECK: JG / MM
ARCHITECT: PDW
ENGINEER:
ARCHITECT:

CONSULTANT:

STATE:

IDENTIFICATION STAMP
DIV. OF THE STATE ARCHITECT
OFFICE OF REGULATION SERVICES
APP NO: 04-113798
FILE NO 30-C2
AC ____ FLS ____ SS ____
DATE ____

SHEET DESCRIPTION:
PARTIAL SITE SIGNAL PLAN

SHEET NO:
E-205

2013\2013-0536 RECD\Santa Ana College - Central Plant Design\CAD\Architectural\2015-06\E205.DGN 6/15/2015 1:08:33 PM

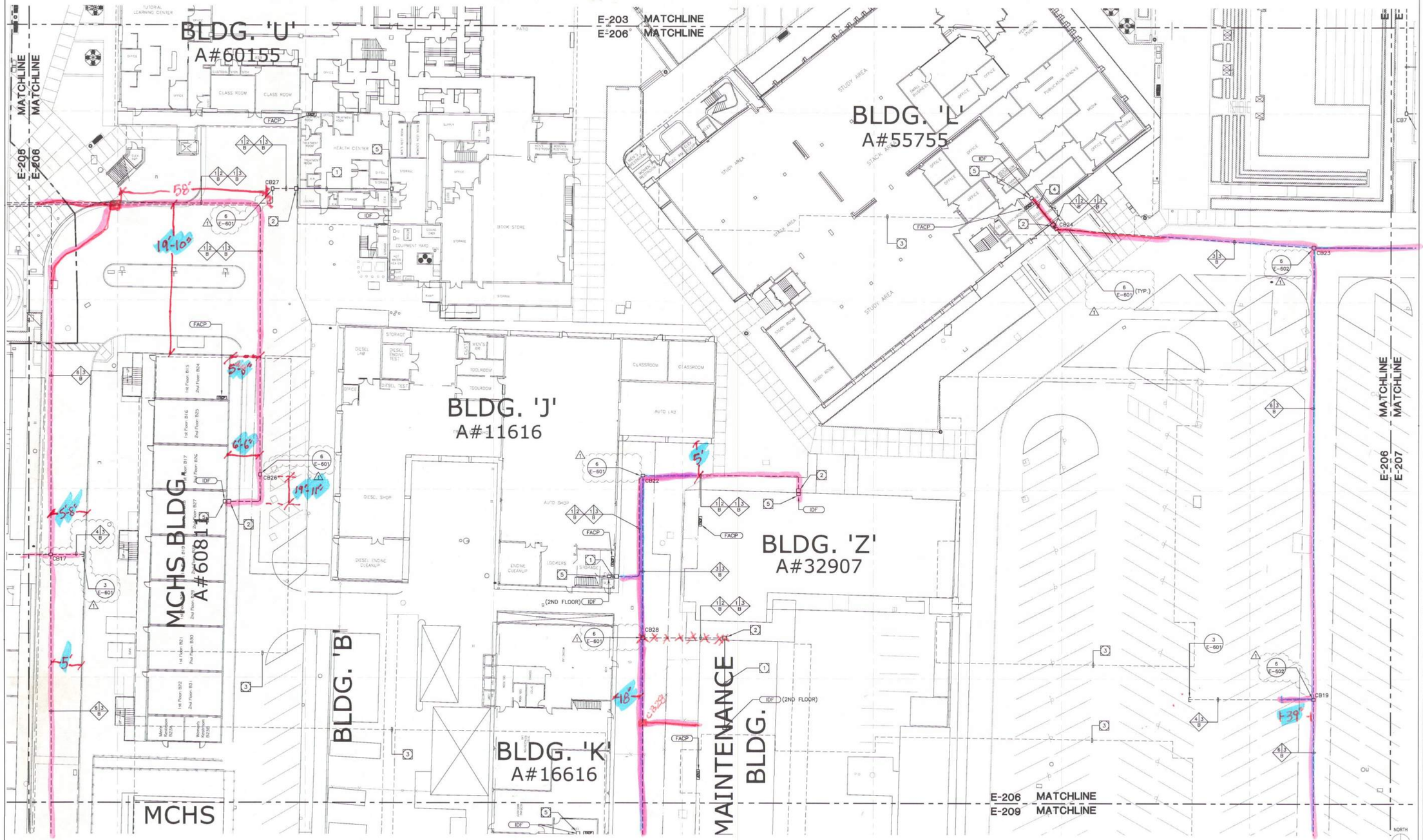

GENERAL DEMOLITION NOTES:

1. THE ELECTRICAL DRAWINGS ARE DIAGRAMMATIC ONLY. DO NOT SCALE THE ELECTRICAL DRAWINGS TO DETERMINE THE LOCATION OF EQUIPMENT OR OUTLETS. SEE ARCHITECTURAL PLANS, WHERE PROVIDED ON PROJECT, FOR EXTENT OF DEMOLITION.
2. THE EXISTING CONDITIONS SHOWN ARE FROM AVAILABLE RECORD DRAWINGS AND SHOWN FOR REFERENCE ONLY. CONTRACTOR SHALL VERIFY ACTUAL EXISTING CONDITIONS AT SITE PRIOR TO SUBMITTING BID. ALL DEMOLITION, ALTERATION, EXTENSION, RELOCATION, REHABILITATION WORK SHALL BE INCLUDED IN CONTRACT. NO ADDITIONAL ALLOWANCE OR CHANGE ORDERS WILL BE ACCEPTED.
3. CONTRACTOR IS RESPONSIBLE TO RELOCATE OR REMOVE FROM WALLS, CEILINGS, FLOOR SPACES, ETC. ANY EXISTING CONDUITS, WIRES, BOXES, FITTINGS, FIXTURES OR OTHER ELECTRICAL EQUIPMENT WHICH INTERFERES WITH PLANNED REMODEL WORK. PROVIDE CIRCUIT CONTINUATION REQUIRED FOR ALL EXISTING OUTLETS, FIXTURES, EQUIPMENT, ETC. SCHEDULED TO REMAIN.
4. NOTIFY THE ENGINEER IMMEDIATELY WHEREVER EXISTING EQUIPMENT IS ENCOUNTERED WHICH MUST BE RELOCATED DUE TO THE NEW CONSTRUCTION, OR NOT INDICATED ON "AS-BUILT" DRAWINGS OR WAS BURIED UNDERGROUND OR EMBEDDED IN STRUCTURE WALLS.
5. CAREFULLY PROTECT ALL WALLS, TRIM, FLOORS, EQUIPMENT, UTILITY LINES AND MATERIALS. WHEN WORKING ON FINISHED SURFACES, LIMIT DAMAGE TO THE SMALLER AREA IF POSSIBLE AND RESTORE TO THE ORIGINAL CONDITION ALL SURFACES WHICH ARE DAMAGED BECAUSE OF THE INSTALLATION OF THIS WORK.
6. EQUIPMENT, MATERIALS AND SUPPLIES TEMPORARILY REMOVED FOR PROTECTION SHALL BE REPLACED IN ORIGINAL LOCATIONS. ANY MATERIALS DAMAGED SHALL BE REPLACED WITH NEW MATERIALS OF LIKE KIND AND QUALITY.
7. DEMOLITION WORK SHALL BE DONE IN A MANNER WHICH WILL NOT CAUSE UNNECESSARY INCONVENIENCE OR DANGER TO USERS OF THE PREMISES AND ADJACENT SITE, AND NOT INTERFERE WITH ITS OPERATION. ANY DEMOLITION WORK TO BE PERFORMED MUST BE PLANNED IN ADVANCE.
8. DO ALL DRILLING, CUTTING, ETC. REQUIRED TO DEMOLISH ELECTRICAL WORK AS INDICATED OR PROVIDE BLANK COVER PLATE ON ALL OUTLETS EXPOSED BY REMOVAL OF FIXTURE OF DEVICES.
9. RESEAL ALL PENETRATIONS OR OPENING THROUGH WALLS, CEILING, FLOORS, ETC., TO MAINTAIN THE RATING OF STRUCTURE.
10. ALL REMOVED MATERIALS AND EQUIPMENT WHICH ARE SALVAGED MATERIALS SHALL REMAIN IN THE PROPERTY OF THE OWNER. DELIVER SUCH SALVAGED MATERIALS AND EQUIPMENT ON THE PREMISES AS DIRECTED BY OWNER AND NEATLY PILE OR STORE AND PROTECT FROM DAMAGE. DISPOSE OF ALL HAZARDOUS MATERIAL PER FEDERAL, STATE AND LOCAL REGULATIONS AND OTHER AGENCIES HAVING JURISDICTION.
11. CONTRACTOR SHALL FIELD VERIFY EXISTING CONDUIT/WIRING RUNS, REUSE AS REQUIRED AND REMOVE ALL UNUSED CONDUIT/WIRING. UNUSED CONDUIT IN INACCESSIBLE LOCATIONS (WALLS TO REMAIN) CAN BE ABANDONED IN PLACE. REMOVE UNUSED WIRING. TO INCLUDE ABANDONED TELEPHONE, DATA AND OTHER LOW VOLTAGE SYSTEMS CABLING AFTER CONFIRMING WITH THE OWNER'S PROJECT MANAGER THAT CABLING IS ABANDONED AND WILL NOT BE RE-USED.
12. CONTRACTOR TO VERIFY CIRCUIT NUMBER AND LOADS FOR ALL EXISTING EQUIPMENT PRIOR TO INSTALLATION OF NEW OR RELOCATED ELECTRICAL EQUIPMENT. REASSIGN CIRCUITS AND LOADS ACCORDINGLY. PROVIDE COMPLETE "AS BUILT" DRAWINGS AND TYPEWRITTEN DIRECTORIES FOR PANELS.
13. WHERE NECESSARY TO SHUT OFF UTILITY SERVICES OR CAUSE INTERRUPTION TO POWER OR SIGNAL SYSTEMS WHILE A BUILDING IS OCCUPIED OR THAT EFFECT ADJACENT BUILDINGS, SCHEDULE OUTAGES OR INTERRUPTIONS WITH THE OWNER, BUILDING OCCUPANTS AND/OR ADJACENT BUILDING OWNER(S) AND OCCUPANTS PRIOR TO CONDUCTING OUTAGE(S) OR INTERRUPTIONS.

SITE PLAN GENERAL NOTES:

1. CONTRACTOR SHALL EXERCISE EXTREME CAUTION IN EXCAVATING AND TRENCHING ON THIS SITE TO AVOID EXISTING DUCTS, PIPING OR CONDUITS, ETC., AND TO PREVENT HAZARDS TO PERSONNEL AND/OR DAMAGE TO EXISTING UNDERGROUND UTILITIES OR STRUCTURES WHETHER OR NOT SHOWN AND INSTALLED BY ANY OTHER CONTRACTS. THE ENGINEER IS NOT RESPONSIBLE FOR THE LOCATION OF UNDERGROUND UTILITIES OR STRUCTURES WHETHER OR NOT SHOWN OR DETAILED AND INSTALLED BY ANY OTHER CONTRACTS. THE CONTRACTOR SHALL IMMEDIATELY NOTIFY THE ENGINEER SHOULD SUCH UNIDENTIFIED CONDITIONS BE DISCOVERED. THESE DRAWINGS AND SPECIFICATIONS DO NOT INCLUDE THE NECESSARY ELEMENTS FOR CONSTRUCTION SAFETY.
2. CALL UNDERGROUND SERVICE ALERT (USA) AT 1 (800) 422-4133 OR APPLICABLE STATE AND LOCAL DIG SAFE OR UNDERGROUND ALERT HOTLINES PRIOR TO CONSTRUCTION START.
3. MINIMUM CONDUIT SIZE SHALL BE 3/4" - U.O.N.
4. MINIMUM CONDUCTOR SIZE SHALL BE #10 AWG. - U.O.N.
5. ALL SITE BRANCH CIRCUITS SHALL INCLUDE A NEC SIZED EQUIPMENT GROUND CONDUCTOR.
6. ALL ELECTRICAL EQUIPMENT MOUNTED OUTDOORS SHALL BE WEATHERPROOF (NEMA #3R).
7. ALL CONDUIT ONLY SHALL BE PROVIDED WITH A NYLON PULL STRING.
8. SEE ARCHITECTURAL/LANDSCAPE ARCHITECTURAL PLANS FOR EXACT LOCATIONS OF FIXTURES, PULLBOXES, MANHOLES, OTHER ELECTRICAL DEVICES, ETC. COORDINATE ALL UNDERGROUND STRUCTURES AND CONDUIT ROUTING WITH LANDSCAPE ARCHITECT PRIOR TO ROUGH-IN TO ENSURE THAT SUCH ITEMS ARE NOT PLACED IN CRITICAL LANDSCAPE PLANTING/HARDSCAPE AREAS.
9. UNLESS SPECIFICALLY SHOWN AS (E), (R), (ER), (O), EXISTING OR NON-BOLD, ALL ELECTRICAL DEVICES SHOWN ARE NEW.
10. PRIOR TO ANY EXCAVATION THE CONTRACTOR SHALL LOCATE AND VERIFY ALL UNDERGROUND UTILITIES BY SCANNING AND POTHOLING AND/OR WHATEVER MEANS NECESSARY.

LEGEND OF CONDUIT SYMBOLS

NO. OF CONDUIT REQUIRED — 4/2 — SIZE OF CONDUIT; B = BUILDING INTERCONNECTION

NOTES:

1. (1)3"C. AND (1)2"C. WITH CABLES AS SPECIFIED ROUTED ABOVE CEILING
2. CONDUITS SHALL BE ROUTED UP THE EXTERIOR OF THE BUILDING TO A 24"x24"x12" PULLBOX.
3. OUTLINE OF FUTURE BUILDING.
4. (1)3"C. AND (1)2"C. WITH CABLES AS SPECIFIED ROUTED EXPOSED.
5. PROVIDE CONNECTION TO THE EXISTING EMS SYSTEM. SEE SPECIAL EMS SYSTEM NOTE ON SHEET MP002 FOR REQUIREMENTS.

ENLARGED SITE SIGNAL PLAN SCALE: 1"=20'-0" | 1

SEARCHABLE SET 6-8-2015

westbergwhite architecture
14471 CHAMBERS RD, SUITE 210
TUSTIN, CA 92780
(714) 508-1780 508-1790 FAX
1775 HANCOCK ST, SUITE 120
SAN DIEGO, CA 92110
(619) 542-1188 542-1563 FAX
719 S. McLELLAND STREET
SANTA MARIA, CA 93454
(805) 346-2991 346-8790 FAX

CONSULTANT:
tk|sc COLLABORATIVE
15231 Laguna Canyon Road, Suite 100
Irvine, California 92618
949.751.5800 www.tk1sc.com
Jerry Leonhardt
tk1sc Job #: 2013-0538

PROJECT NAME:

Santa Ana College
Quad and Infrastructure Renovation
1530 West 17th Street
Santa Ana, California 92706

CLIENT:
Rancho Santiago Community College District
2323 North Broadway
Santa Ana, CA 92706

No.	Rev. Date	Description
1	04/14/2015	ADDENDUM 01

JOB NO: 13022.02
DATE: 03/06/2015
DRAWN: MM / RR / RB
CHECK: JG / MM
ARCHITECT: PDW
ENGINEER:
ARCHITECT:

CONSULTANT:

REGISTERED PROFESSIONAL ENGINEER RAYMOND W. SWANSON No. E15610 12/31/15 ELECTRICAL STATE OF CALIFORNIA

STATE:
IDENTIFICATION STAMP DIV. OF THE STATE ARCHITECT OFFICE OF REGULATION SERVICES
APP NO:04-113798 FILE NO:30-C2
AC ____ FLS ____ SS ____
DATE ____

SHEET DESCRIPTION:
PARTIAL SITE SIGNAL PLAN

SHEET NO:
E-206

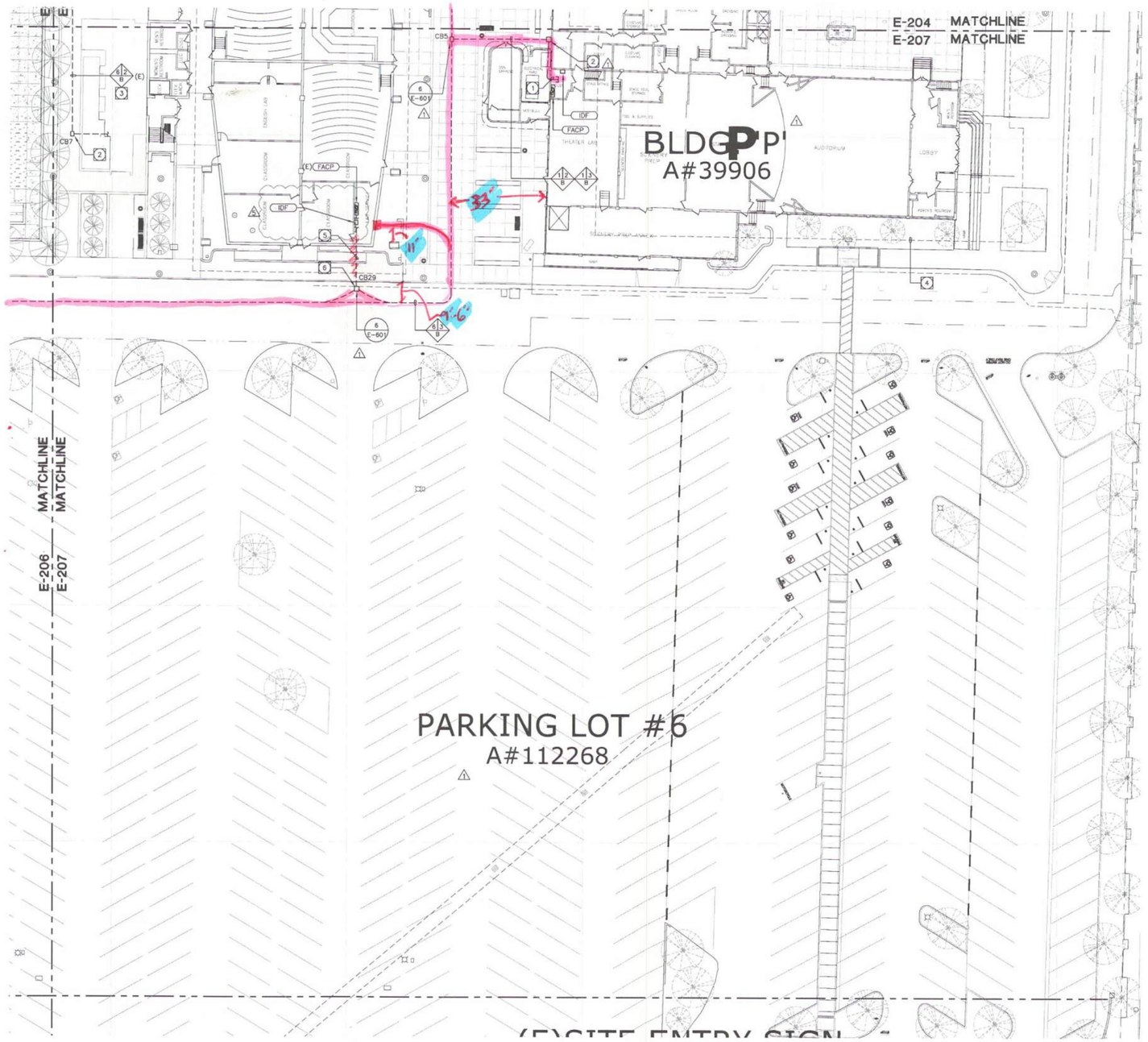

ENLARGED SITE SIGNAL PLAN SCALE: 1"=20'-0" 1

GENERAL DEMOLITION NOTES:

1. THE ELECTRICAL DRAWINGS ARE DIAGRAMMATIC ONLY. DO NOT SCALE THE ELECTRICAL DRAWINGS TO DETERMINE THE LOCATION OF EQUIPMENT OR OUTLETS. SEE ARCHITECTURAL PLANS, WHERE PROVIDED ON PROJECT, FOR EXTENT OF DEMOLITION.
2. THE EXISTING CONDITIONS SHOWN ARE FROM AVAILABLE RECORD DRAWINGS AND SHOWN FOR REFERENCE ONLY. CONTRACTOR SHALL VERIFY ACTUAL EXISTING CONDITIONS AT SITE PRIOR TO SUBMITTING BID. ALL DEMOLITION, ALTERATION, EXTENSION, RELOCATION, REHABILITATION WORK SHALL BE INCLUDED IN CONTRACT. NO ADDITIONAL ALLOWANCE OR CHANGE ORDERS WILL BE ACCEPTED.
3. CONTRACTOR IS RESPONSIBLE TO RELOCATE OR REMOVE FROM WALLS, CEILINGS, FLOOR SPACES, ETC. ANY EXISTING CONDUITS, WIRES, BOXES, FITTINGS, FIXTURES OR OTHER ELECTRICAL EQUIPMENT WHICH INTERFERES WITH PLANNED REMODEL WORK. PROVIDE CIRCUIT CONTINUATION REQUIRED FOR ALL EXISTING OUTLETS, FIXTURES, EQUIPMENT, ETC. SCHEDULED TO REMAIN.
4. NOTIFY THE ENGINEER IMMEDIATELY WHEREVER EXISTING EQUIPMENT IS ENCOUNTERED WHICH MUST BE RELOCATED DUE TO THE NEW CONSTRUCTION, OR NOT INDICATED ON "AS-BUILT" DRAWINGS OR WAS BURIED UNDERGROUND OR EMBEDDED IN STRUCTURE WALLS.
5. CAREFULLY PROTECT ALL WALLS, TRIM, FLOORS, EQUIPMENT, UTILITY LINES AND MATERIALS. WHEN WORKING ON FINISHED SURFACES, LIMIT DAMAGE TO THE SMALLER AREA IF POSSIBLE AND RESTORE TO THE ORIGINAL CONDITION ALL SURFACES WHICH ARE DAMAGED BECAUSE OF THE INSTALLATION OF THIS WORK.
6. EQUIPMENT, MATERIALS AND SUPPLIES TEMPORARILY REMOVED FOR PROTECTION SHALL BE REPLACED IN ORIGINAL LOCATIONS. ANY MATERIALS DAMAGED SHALL BE REPLACED WITH NEW MATERIALS OF LIKE KIND AND QUALITY.
7. DEMOLITION WORK SHALL BE DONE IN A MANNER WHICH WILL NOT CAUSE UNNECESSARY INCONVENIENCE OR DANGER TO USERS OF THE PREMISES AND ADJACENT SITE, AND NOT INTERFERE WITH ITS OPERATION. ANY DEMOLITION WORK TO BE PERFORMED MUST BE PLANNED IN ADVANCE.
8. DO ALL DRILLING, CUTTING, ETC. REQUIRED TO DEMOLISH ELECTRICAL WORK AS INDICATED OR PROVIDE BLANK COVER PLATE ON ALL OUTLETS EXPOSED BY REMOVAL OF FIXTURE OF DEVICES.
9. RESEAL ALL PENETRATIONS OR OPENING THROUGH WALLS, CEILING, FLOORS, ETC., TO MAINTAIN THE RATING OF STRUCTURE.
10. ALL REMOVED MATERIALS AND EQUIPMENT WHICH ARE SALVAGED MATERIALS SHALL REMAIN IN THE PROPERTY OF THE OWNER. DELIVER SUCH SALVAGED MATERIALS AND EQUIPMENT ON THE PREMISES AS DIRECTED BY OWNER AND NEATLY PILE OR STORE AND PROTECT FROM DAMAGE. DISPOSE OF ALL HAZARDOUS MATERIAL PER FEDERAL, STATE AND LOCAL REGULATIONS AND OTHER AGENCIES HAVING JURISDICTION.
11. CONTRACTOR SHALL FIELD VERIFY EXISTING CONDUIT/WIRING RUNS, REUSE AS REQUIRED AND REMOVE ALL UNUSED CONDUIT/WIRING. UNUSED CONDUIT IN INACCESSIBLE LOCATIONS (WALLS TO REMAIN) CAN BE ABANDONED IN PLACE. REMOVE UNUSED WIRING. TO INCLUDE ABANDONED TELEPHONE, DATA AND OTHER LOW VOLTAGE SYSTEMS CABLING AFTER CONFIRMING WITH THE OWNER'S PROJECT MANAGER THAT CABLING IS ABANDONED AND WILL NOT BE RE-USED.
12. CONTRACTOR TO VERIFY CIRCUIT NUMBER AND LOADS FOR ALL EXISTING EQUIPMENT PRIOR TO INSTALLATION OF NEW OR RELOCATED ELECTRICAL EQUIPMENT. REASSIGN CIRCUITS AND LOADS ACCORDINGLY. PROVIDE COMPLETE "AS BUILT" DRAWINGS AND TYPEWRITTEN DIRECTORIES FOR PANELS.
13. WHERE NECESSARY TO SHUT OFF UTILITY SERVICES OR CAUSE INTERRUPTION TO POWER OR SIGNAL SYSTEMS WHILE A BUILDING IS OCCUPIED OR THAT EFFECT ADJACENT BUILDINGS, SCHEDULE OUTAGES OR INTERRUPTIONS WITH THE OWNER, BUILDING OCCUPANTS AND/OR ADJACENT BUILDING OWNER(S) AND OCCUPANTS PRIOR TO CONDUCTING OUTAGE(S) OR INTERRUPTIONS.

SITE PLAN GENERAL NOTES:

1. CONTRACTOR SHALL EXERCISE EXTREME CAUTION IN EXCAVATING AND TRENCHING ON THIS SITE TO AVOID EXISTING DUCTS, PIPING OR CONDUITS, ETC., AND TO PREVENT HAZARDS TO PERSONNEL AND/OR DAMAGE TO EXISTING UNDERGROUND UTILITIES OR STRUCTURES WHETHER OR NOT SHOWN AND INSTALLED BY ANY OTHER CONTRACTS. THE ENGINEER IS NOT RESPONSIBLE FOR THE LOCATION OF UNDERGROUND UTILITIES OR STRUCTURES WHETHER OR NOT SHOWN OR DETAILED AND INSTALLED BY ANY OTHER CONTRACTS. THE CONTRACTOR SHALL IMMEDIATELY NOTIFY THE ENGINEER SHOULD SUCH UNIDENTIFIED CONDITIONS BE DISCOVERED. THESE DRAWINGS AND SPECIFICATIONS DO NOT INCLUDE THE NECESSARY ELEMENTS FOR CONSTRUCTION SAFETY.
2. CALL UNDERGROUND SERVICE ALERT (USA) AT 1 (800) 422-4133 OR APPLICABLE STATE AND LOCAL DIG SAFE OR UNDERGROUND ALERT HOTLINES PRIOR TO CONSTRUCTION START.
3. MINIMUM CONDUIT SIZE SHALL BE 3/4" – U.O.N.
4. MINIMUM CONDUCTOR SIZE SHALL BE #10 AWG. – U.O.N.
5. ALL SITE BRANCH CIRCUITS SHALL INCLUDE A NEC SIZED EQUIPMENT GROUND CONDUCTOR.
6. ALL ELECTRICAL EQUIPMENT MOUNTED OUTDOORS SHALL BE WEATHERPROOF (NEMA #3R).
7. ALL CONDUIT ONLY SHALL BE PROVIDED WITH A NYLON PULL STRING.
8. SEE ARCHITECTURAL/LANDSCAPE ARCHITECTURAL PLANS FOR EXACT LOCATIONS OF FIXTURES, PULLBOXES, MANHOLES, OTHER ELECTRICAL DEVICES, ETC. COORDINATE ALL UNDERGROUND STRUCTURES AND CONDUIT ROUTING WITH LANDSCAPE ARCHITECT PRIOR TO ROUGH-IN TO ENSURE THAT SUCH ITEMS ARE NOT PLACED IN CRITICAL LANDSCAPE PLANTING/HARDSCAPE AREAS.
9. UNLESS SPECIFICALLY SHOWN AS (E), (R), (ER), (D), EXISTING OR NON-BOLD, ALL ELECTRICAL DEVICES SHOWN ARE NEW.
10. PRIOR TO ANY EXCAVATION THE CONTRACTOR SHALL LOCATE AND VERIFY ALL UNDERGROUND UTILITIES BY SCANNING AND POTHOLING AND/OR WHATEVER MEANS NECESSARY.

LEGEND OF CONDUIT SYMBOLS

NO. OF CONDUIT REQUIRED — A / B — SIZE OF CONDUIT; B = BUILDING INTERCONNECTION

NOTES:

1. EXISTING (2) 2"C. SPARES ROUTED ON THE OUTSIDE OF THE BUILDING TO BE USED FOR NEW CABLES. SEE SHEET E-701 FOR MORE INFORMATION.
2. EXISTING PULLBOX.
3. EXISTING 2"C. SPARES TO BE USED FOR NEW CABLES. SEE SHEET E-701 FOR MORE INFORMATION.
4. OUTLINE OF FUTURE BUILDING.
5. REMOVE EXISTING FIRE ALARM FIBER OPTIC CABLE FROM EXISTING CONDUIT AND INSTALL NEW FIBER OPTIC CABLE AS SPECIFIED.
6. INTERCEPT EXISTING CONDUITS AS REQUIRED.

architecture
westbergwhite
14471 CHAMBERS RD, SUITE 210
TUSTIN, CA 92780
(714) 508-1780 508-1790 FAX
1775 HANCOCK ST, SUITE 120
SAN DIEGO, CA 92110
(619) 542-1188 542-1663 FAX
719 S. McCLELLAND STREET
SANTA MARIA, CA 93454
(805) 346-2991 346-8790 FAX

CONSULTANT:
tklsc COLLABORATIVE
15231 Laguna Canyon Road, Suite 100
Irvine, California 92618
949.751.5800 www.tklsc.com
Jerry Lacchanzi
tklsc Job #: 2013-0538

PROJECT NAME:

Santa Ana College
Quad and Infrastructure Renovation
1530 West 17th Street
Santa Ana, California 92706

CLIENT:
Rancho Santiago Community College District
2323 North Broadway
Santa Ana, CA 92706

No.	Rev. Date	Description
4	06/16/2015	ADDENDUM 04
5	06/22/2015	ADDENDUM 05

JOB NO: 13022.02
DATE: 03/06/2015
DRAWN: MM / RR / RB
CHECK: JG / MM
ARCHITECT: PDW
ENGINEER:
ARCHITECT:

CONSULTANT:
REGISTERED PROFESSIONAL ENGINEER RAYMOND W. SWARTZ No. E15610 ELECTRICAL STATE OF CALIFORNIA

STATE:
IDENTIFICATION STAMP DIV. OF THE STATE ARCHITECT OFFICE OF REGULATION SERVICES
APP NO: 04-113798
FILE NO: 30-C2
AC ____ FLS ____ SS ____
DATE ____

SHEET DESCRIPTION:
PARTIAL SITE SIGNAL PLAN

SHEET NO:
E-207

\\SOS\SOS-MPDB RECITS Santa Ana Comm. College - Central Plant Design\Cad\Archive\Quad\Quad_SITE SIGNAL PLAN.dwg, 6/24/2015 4:53:53 PM

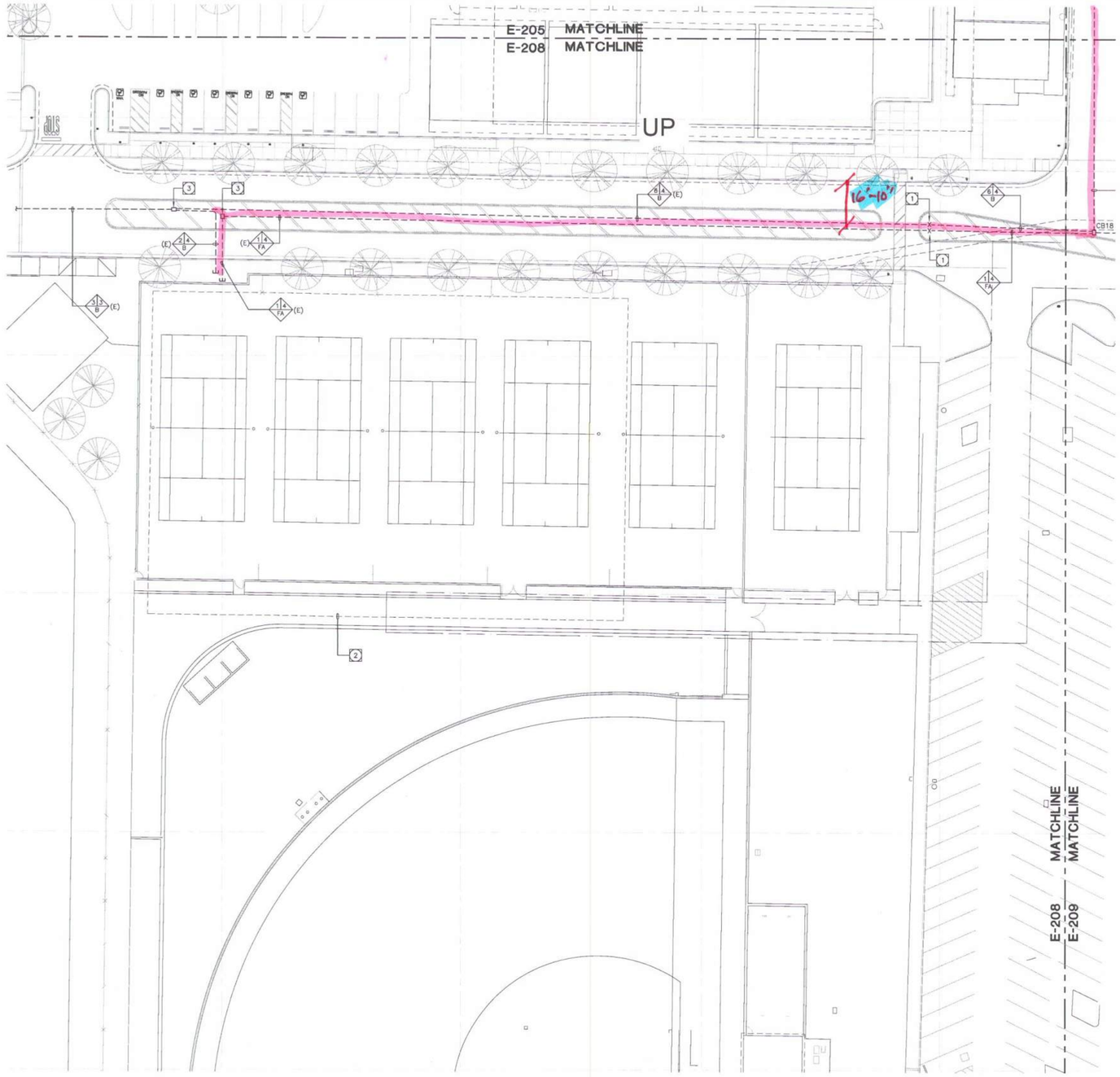

ENLARGED SITE SIGNAL PLAN SCALE: 1"=20'-0" 1

GENERAL DEMOLITION NOTES:

1. THE ELECTRICAL DRAWINGS ARE DIAGRAMMATIC ONLY. DO NOT SCALE THE ELECTRICAL DRAWINGS TO DETERMINE THE LOCATION OF EQUIPMENT OR OUTLETS. SEE ARCHITECTURAL PLANS, WHERE PROVIDED ON PROJECT, FOR EXTENT OF DEMOLITION.
2. THE EXISTING CONDITIONS SHOWN ARE FROM AVAILABLE RECORD DRAWINGS AND SHOWN FOR REFERENCE ONLY. CONTRACTOR SHALL VERIFY ACTUAL EXISTING CONDITIONS AT SITE PRIOR TO SUBMITTING BID. ALL DEMOLITION, ALTERATION, EXTENSION, RELOCATION, REHABILITATION WORK SHALL BE INCLUDED IN CONTRACT. NO ADDITIONAL ALLOWANCE OR CHANGE ORDERS WILL BE ACCEPTED.
3. CONTRACTOR IS RESPONSIBLE TO RELOCATE OR REMOVE FROM WALLS, CEILINGS, FLOOR SPACES, ETC. ANY EXISTING CONDUITS, WIRES, BOXES, FITTINGS, FIXTURES OR OTHER ELECTRICAL EQUIPMENT WHICH INTERFERES WITH PLANNED REMODEL WORK. PROVIDE CIRCUIT CONTINUATION REQUIRED FOR ALL EXISTING OUTLETS, FIXTURES, EQUIPMENT, ETC. SCHEDULED TO REMAIN.
4. NOTIFY THE ENGINEER IMMEDIATELY WHEREVER EXISTING EQUIPMENT IS ENCOUNTERED WHICH MUST BE RELOCATED DUE TO THE NEW CONSTRUCTION, OR NOT INDICATED ON "AS-BUILT" DRAWINGS OR WAS BURIED UNDERGROUND OR EMBEDDED IN STRUCTURE WALLS.
5. CAREFULLY PROTECT ALL WALLS, TRIM, FLOORS, EQUIPMENT, UTILITY LINES AND MATERIALS. WHEN WORKING ON FINISHED SURFACES, LIMIT DAMAGE TO THE SMALLER AREA IF POSSIBLE AND RESTORE TO THE ORIGINAL CONDITION ALL SURFACES WHICH ARE DAMAGED BECAUSE OF THE INSTALLATION OF THIS WORK.
6. EQUIPMENT, MATERIALS AND SUPPLIES TEMPORARILY REMOVED FOR PROTECTION SHALL BE REPLACED IN ORIGINAL LOCATIONS. ANY MATERIALS DAMAGED SHALL BE REPLACED WITH NEW MATERIALS OF LIKE KIND AND QUALITY.
7. DEMOLITION WORK SHALL BE DONE IN A MANNER WHICH WILL NOT CAUSE UNNECESSARY INCONVENIENCE OR DANGER TO USERS OF THE PREMISES AND ADJACENT SITE, AND NOT INTERFERE WITH ITS OPERATION. ANY DEMOLITION WORK TO BE PERFORMED MUST BE PLANNED IN ADVANCE.
8. DO ALL DRILLING, CUTTING, ETC. REQUIRED TO DEMOLISH ELECTRICAL WORK AS INDICATED OR PROVIDE BLANK COVER PLATE ON ALL OUTLETS EXPOSED BY REMOVAL OF FIXTURE OF DEVICES.
9. RESEAL ALL PENETRATIONS OR OPENING THROUGH WALLS, CEILING, FLOORS, ETC., TO MAINTAIN THE RATING OF STRUCTURE.
10. ALL REMOVED MATERIALS AND EQUIPMENT WHICH ARE SALVAGED MATERIALS SHALL REMAIN IN THE PROPERTY OF THE OWNER. DELIVER SUCH SALVAGED MATERIALS AND EQUIPMENT ON THE PREMISES AS DIRECTED BY OWNER AND NEATLY PILE OR STORE AND PROTECT FROM DAMAGE. DISPOSE OF ALL HAZARDOUS MATERIAL PER FEDERAL, STATE AND LOCAL REGULATIONS AND OTHER AGENCIES HAVING JURISDICTION.
11. CONTRACTOR SHALL FIELD VERIFY EXISTING CONDUIT/WIRING RUNS, REUSE AS REQUIRED AND REMOVE ALL UNUSED CONDUIT/WIRING. UNUSED CONDUIT IN INACCESSIBLE LOCATIONS (WALLS TO REMAIN) CAN BE ABANDONED IN PLACE. REMOVE UNUSED WIRING. TO INCLUDE ABANDONED TELEPHONE, DATA AND OTHER LOW VOLTAGE SYSTEMS CABLING AFTER CONFIRMING WITH THE OWNER'S PROJECT MANAGER THAT CABLING IS ABANDONED AND WILL NOT BE RE-USED.
12. CONTRACTOR TO VERIFY CIRCUIT NUMBER AND LOADS FOR ALL EXISTING EQUIPMENT PRIOR TO INSTALLATION OF NEW OR RELOCATED ELECTRICAL EQUIPMENT. REASSIGN CIRCUITS AND LOADS ACCORDINGLY. PROVIDE COMPLETE "AS BUILT" DRAWINGS AND TYPEWRITTEN DIRECTORIES FOR PANELS.
13. WHERE NECESSARY TO SHUT OFF UTILITY SERVICES OR CAUSE INTERRUPTION TO POWER OR SIGNAL SYSTEMS WHILE A BUILDING IS OCCUPIED OR THAT EFFECT ADJACENT BUILDINGS, SCHEDULE OUTAGES OR INTERRUPTIONS WITH THE OWNER, BUILDING OCCUPANTS AND/OR ADJACENT BUILDING OWNER(S) AND OCCUPANTS PRIOR TO CONDUCTING OUTAGE(S) OR INTERRUPTIONS.

SITE PLAN GENERAL NOTES:

1. CONTRACTOR SHALL EXERCISE EXTREME CAUTION IN EXCAVATING AND TRENCHING ON THIS SITE TO AVOID EXISTING DUCTS, PIPING OR CONDUITS, ETC., AND TO PREVENT HAZARDS TO PERSONNEL AND/OR DAMAGE TO EXISTING UNDERGROUND UTILITIES OR STRUCTURES WHETHER OR NOT SHOWN AND INSTALLED BY ANY OTHER CONTRACTS. THE ENGINEER IS NOT RESPONSIBLE FOR THE LOCATION OF UNDERGROUND UTILITIES OR STRUCTURES WHETHER OR NOT SHOWN OR DETAILED AND INSTALLED BY ANY OTHER CONTRACTS. THE CONTRACTOR SHALL IMMEDIATELY NOTIFY THE ENGINEER SHOULD SUCH UNIDENTIFIED CONDITIONS BE DISCOVERED. THESE DRAWINGS AND SPECIFICATIONS DO NOT INCLUDE THE NECESSARY ELEMENTS FOR CONSTRUCTION SAFETY.
2. CALL UNDERGROUND SERVICE ALERT (USA) AT 1 (800) 422-4133 OR APPLICABLE STATE AND LOCAL DIG SAFE OR UNDERGROUND ALERT HOTLINES PRIOR TO CONSTRUCTION START.
3. MINIMUM CONDUIT SIZE SHALL BE 3/4" - U.O.N.
4. MINIMUM CONDUCTOR SIZE SHALL BE #10 AWG. - U.O.N.
5. ALL SITE BRANCH CIRCUITS SHALL INCLUDE A NEC SIZED EQUIPMENT GROUND CONDUCTOR.
6. ALL ELECTRICAL EQUIPMENT MOUNTED OUTDOORS SHALL BE WEATHERPROOF (NEMA #3R).
7. ALL CONDUIT ONLY SHALL BE PROVIDED WITH A NYLON PULL STRING.
8. SEE ARCHITECTURAL/LANDSCAPE ARCHITECTURAL PLANS FOR EXACT LOCATIONS OF FIXTURES, PULLBOXES, MANHOLES, OTHER ELECTRICAL DEVICES, ETC. COORDINATE ALL UNDERGROUND STRUCTURES AND CONDUIT ROUTING WITH LANDSCAPE ARCHITECT PRIOR TO ROUGH-IN TO ENSURE THAT SUCH ITEMS ARE NOT PLACED IN CRITICAL LANDSCAPE PLANTING/HARDSCAPE AREAS.
9. UNLESS SPECIFICALLY SHOWN AS (E), (R), (ER), (D), EXISTING OR NON-BOLD, ALL ELECTRICAL DEVICES SHOWN ARE NEW.
10. PRIOR TO ANY EXCAVATION THE CONTRACTOR SHALL LOCATE AND VERIFY ALL UNDERGROUND UTILITIES BY SCANNING AND POTHOLING AND/OR WHATEVER MEANS NECESSARY.

LEGEND OF CONDUIT SYMBOLS

NO. OF CONDUIT REQUIRED — A — SIZE OF CONDUIT
B = BUILDING INTERCONNECTION

NOTES:

1. INTERCEPT EXISTING CONDUITS AS REQUIRED.
2. OUTLINE OF FUTURE BUILDING.
3. EXISTING PULLBOX.

architecture
westbergwhite

14471 CHAMBERS RD, SUITE 210
TUSTIN, CA 92780
(714) 508-1780 508-1790 FAX

1775 HANCOCK ST, SUITE 120
SAN DIEGO, CA 92110
(619) 542-1188 542-1663 FAX

719 S. McCLELLAND STREET
SANTA MARIA, CA 93454
(805) 346-2991 346-8790 FAX

CONSULTANT:
tklsc COLLABORATIVE
15231 Laguna Canyon Road, Suite 100
Irvine, California 92618
949.751.5800 www.tklsc.com
Jerry Leonhardt
tklsc Job #: 2013-0538

PROJECT NAME:

Santa Ana College
Quad and Infrastructure Renovation
1530 West 17th Street
Santa Ana, California 92706

CLIENT:
Rancho Santiago Community College District
2323 North Broadway
Santa Ana, CA 92706

Rev.	Date	Description

JOB NO: 13022.02
DATE: 03/06/2015
DRAWN: MM / RR / RB
CHECK: JG / MM
ARCHITECT: PDW
ENGINEER:
ARCHITECT:

CONSULTANT:

REGISTERED PROFESSIONAL ENGINEER RAYMOND W. TRIPP No. E15610 ELECTRICAL STATE OF CALIFORNIA 6/3/15

STATE:
IDENTIFICATION STAMP
DIV. OF THE STATE ARCHITECT
OFFICE OF REGULATION SERVICES
APP NO: 04-113798
FILE NO: 30-C2
AC FLS SS
DATE

SHEET DESCRIPTION:
PARTIAL SITE SIGNAL PLAN

SHEET NO:
E-208

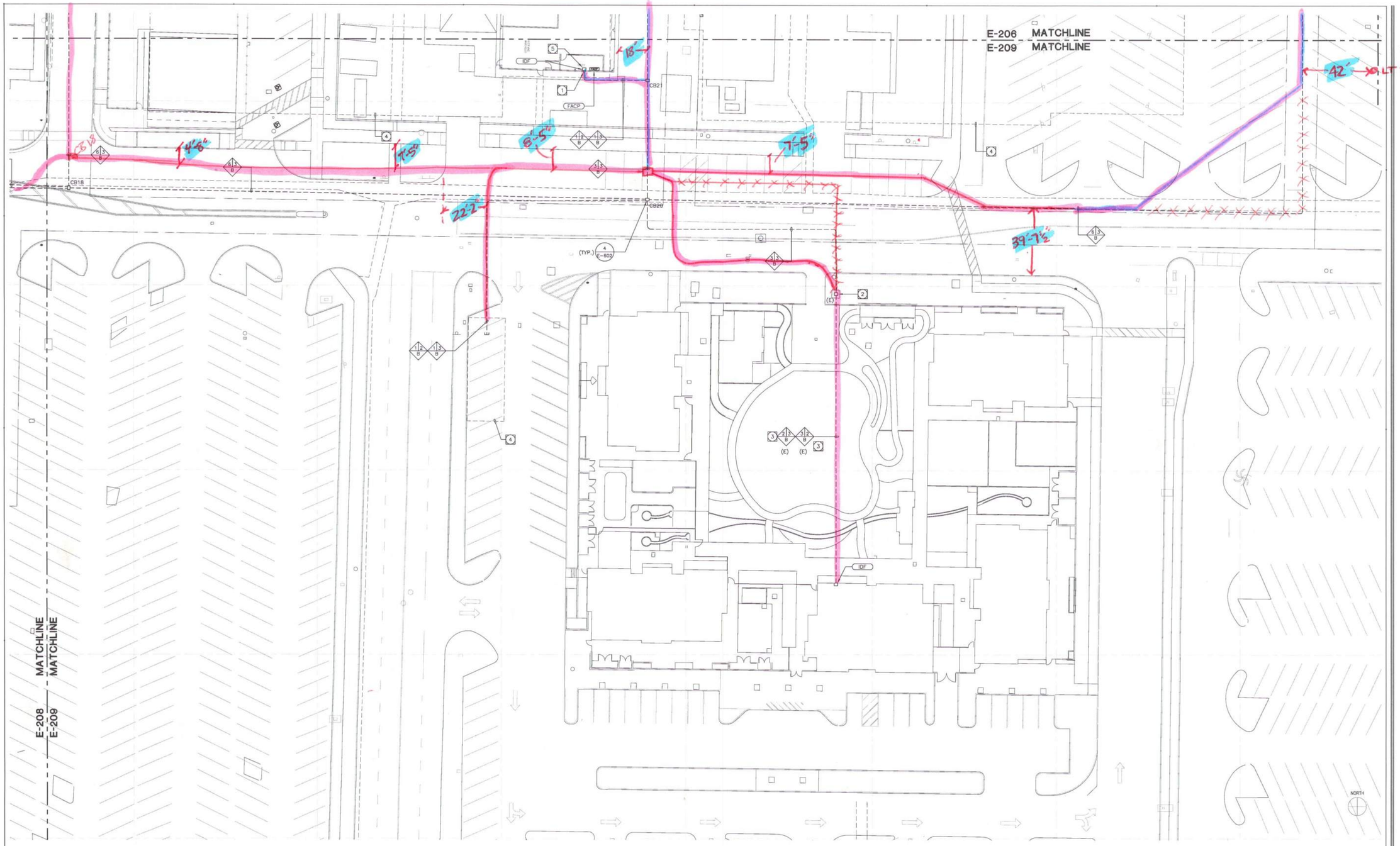

GENERAL DEMOLITION NOTES:

1. THE ELECTRICAL DRAWINGS ARE DIAGRAMMATIC ONLY. DO NOT SCALE THE ELECTRICAL DRAWINGS TO DETERMINE THE LOCATION OF EQUIPMENT OR OUTLETS. SEE ARCHITECTURAL PLANS, WHERE PROVIDED ON PROJECT, FOR EXTENT OF DEMOLITION.
2. THE EXISTING CONDITIONS SHOWN ARE FROM AVAILABLE RECORD DRAWINGS AND SHOWN FOR REFERENCE ONLY. CONTRACTOR SHALL VERIFY ACTUAL EXISTING CONDITIONS AT SITE PRIOR TO SUBMITTING BID. ALL DEMOLITION, ALTERATION, EXTENSION, RELOCATION, REHABILITATION WORK SHALL BE INCLUDED IN CONTRACT. NO ADDITIONAL ALLOWANCE OR CHANGE ORDERS WILL BE ACCEPTED.
3. CONTRACTOR IS RESPONSIBLE TO RELOCATE OR REMOVE FROM WALLS, CEILINGS, FLOOR SPACES, ETC. ANY EXISTING CONDUITS, WIRES, BOXES, FITTINGS, FIXTURES OR OTHER ELECTRICAL EQUIPMENT WHICH INTERFERES WITH PLANNED REMODEL WORK. PROVIDE CIRCUIT CONTINUATION REQUIRED FOR ALL EXISTING OUTLETS, FIXTURES, EQUIPMENT, ETC. SCHEDULED TO REMAIN.
4. NOTIFY THE ENGINEER IMMEDIATELY WHEREVER EXISTING EQUIPMENT IS ENCOUNTERED WHICH MUST BE RELOCATED DUE TO THE NEW CONSTRUCTION, OR NOT INDICATED ON "AS-BUILT" DRAWINGS OR WAS BURIED UNDERGROUND OR EMBEDDED IN STRUCTURE WALLS.
5. CAREFULLY PROTECT ALL WALLS, TRIM, FLOORS, EQUIPMENT, UTILITY LINES AND MATERIALS. WHEN WORKING ON FINISHED SURFACES, LIMIT DAMAGE TO THE SMALLER AREA IF POSSIBLE AND RESTORE TO THE ORIGINAL CONDITION ALL SURFACES WHICH ARE DAMAGED BECAUSE OF THE INSTALLATION OF THIS WORK.
6. EQUIPMENT, MATERIALS AND SUPPLIES TEMPORARILY REMOVED FOR PROTECTION SHALL BE REPLACED IN ORIGINAL LOCATIONS. ANY MATERIALS DAMAGED SHALL BE REPLACED WITH NEW MATERIALS OF LIKE KIND AND QUALITY.
7. DEMOLITION WORK SHALL BE DONE IN A MANNER WHICH WILL NOT CAUSE UNNECESSARY INCONVENIENCE OR DANGER TO USERS OF THE PREMISES AND ADJACENT SITE, AND NOT INTERFERE WITH ITS OPERATION. ANY DEMOLITION WORK TO BE PERFORMED MUST BE PLANNED IN ADVANCE.
8. DO ALL DRILLING, CUTTING, ETC. REQUIRED TO DEMOLISH ELECTRICAL WORK AS INDICATED OR PROVIDE BLANK COVER PLATE ON ALL OUTLETS EXPOSED BY REMOVAL OF FIXTURE OF DEVICES.
9. RESEAL ALL PENETRATIONS OR OPENING THROUGH WALLS, CEILING, FLOORS, ETC., TO MAINTAIN THE RATING OF STRUCTURE.
10. ALL REMOVED MATERIALS AND EQUIPMENT WHICH ARE SALVAGED MATERIALS SHALL REMAIN IN THE PROPERTY OF THE OWNER. DELIVER SUCH SALVAGED MATERIALS AND EQUIPMENT ON THE PREMISES AS DIRECTED BY OWNER AND NEATLY PILE OR STORE AND PROTECT FROM DAMAGE. DISPOSE OF ALL HAZARDOUS MATERIAL PER FEDERAL, STATE AND LOCAL REGULATIONS AND OTHER AGENCIES HAVING JURISDICTION.
11. CONTRACTOR SHALL FIELD VERIFY EXISTING CONDUIT/WIRING RUNS, REUSE AS REQUIRED AND REMOVE ALL UNUSED CONDUIT/WIRING. UNUSED CONDUIT IN INACCESSIBLE LOCATIONS (WALLS TO REMAIN) CAN BE ABANDONED IN PLACE. REMOVE UNUSED WIRING. TO INCLUDE ABANDONED TELEPHONE, DATA AND OTHER LOW VOLTAGE SYSTEMS CABLING AFTER CONFIRMING WITH THE OWNER'S PROJECT MANAGER THAT CABLING IS ABANDONED AND WILL NOT BE RE-USED.
12. CONTRACTOR TO VERIFY CIRCUIT NUMBER AND LOADS FOR ALL EXISTING EQUIPMENT PRIOR TO INSTALLATION OF NEW OR RELOCATED ELECTRICAL EQUIPMENT. REASSIGN CIRCUITS AND LOADS ACCORDINGLY. PROVIDE COMPLETE "AS BUILT" DRAWINGS AND TYPEWRITTEN DIRECTORIES FOR PANELS.
13. WHERE NECESSARY TO SHUT OFF UTILITY SERVICES OR CAUSE INTERRUPTION TO POWER OR SIGNAL SYSTEMS WHILE A BUILDING IS OCCUPIED OR THAT EFFECT ADJACENT BUILDINGS, SCHEDULE OUTAGES OR INTERRUPTIONS WITH THE OWNER, BUILDING OCCUPANTS AND/OR ADJACENT BUILDING OWNER(S) AND OCCUPANTS PRIOR TO CONDUCTING OUTAGE(S) OR INTERRUPTIONS.

SITE PLAN GENERAL NOTES:

1. CONTRACTOR SHALL EXERCISE EXTREME CAUTION IN EXCAVATING AND TRENCHING ON THIS SITE TO AVOID EXISTING DUCTS, PIPING OR CONDUITS, ETC., AND TO PREVENT HAZARDS TO PERSONNEL AND/OR DAMAGE TO EXISTING UNDERGROUND UTILITIES OR STRUCTURES WHETHER OR NOT SHOWN AND INSTALLED BY ANY OTHER CONTRACTS. THE ENGINEER IS NOT RESPONSIBLE FOR THE LOCATION OF UNDERGROUND UTILITIES OR STRUCTURES WHETHER OR NOT SHOWN OR DETAILED AND INSTALLED BY ANY OTHER CONTRACTS. THE CONTRACTOR SHALL IMMEDIATELY NOTIFY THE ENGINEER SHOULD SUCH UNIDENTIFIED CONDITIONS BE DISCOVERED. THESE DRAWINGS AND SPECIFICATIONS DO NOT INCLUDE THE NECESSARY ELEMENTS FOR CONSTRUCTION SAFETY.
2. CALL UNDERGROUND SERVICE ALERT (USA) AT 1 (800) 422-4133 OR APPLICABLE STATE AND LOCAL DIG SAFE OR UNDERGROUND ALERT HOTLINES PRIOR TO CONSTRUCTION START.
3. MINIMUM CONDUIT SIZE SHALL BE 3/4" - U.O.N.
4. MINIMUM CONDUCTOR SIZE SHALL BE #10 AWG. - U.O.N.
5. ALL SITE BRANCH CIRCUITS SHALL INCLUDE A NEC SIZED EQUIPMENT GROUND CONDUCTOR.
6. ALL ELECTRICAL EQUIPMENT MOUNTED OUTDOORS SHALL BE WEATHERPROOF (NEMA #3R).
7. ALL CONDUIT ONLY SHALL BE PROVIDED WITH A NYLON PULL STRING.
8. SEE ARCHITECTURAL/LANDSCAPE ARCHITECTURAL PLANS FOR EXACT LOCATIONS OF FIXTURES, PULLBOXES, MANHOLES, OTHER ELECTRICAL DEVICES, ETC. COORDINATE ALL UNDERGROUND STRUCTURES AND CONDUIT ROUTING WITH LANDSCAPE ARCHITECT PRIOR TO ROUGH-IN TO ENSURE THAT SUCH ITEMS ARE NOT PLACED IN CRITICAL LANDSCAPE PLANTING/HARDSCAPE AREAS.
9. UNLESS SPECIFICALLY SHOWN AS (E), (R), (ER), (D), EXISTING OR NON-BOLD, ALL ELECTRICAL DEVICES SHOWN ARE NEW.
10. PRIOR TO ANY EXCAVATION THE CONTRACTOR SHALL LOCATE AND VERIFY ALL UNDERGROUND UTILITIES BY SCANNING AND POTHOLING AND/OR WHATEVER MEANS NECESSARY.

LEGEND OF CONDUIT SYMBOLS

NO. OF CONDUIT REQUIRED — 1/B — SIZE OF CONDUIT; B = BUILDING INTERCONNECTION

NOTES:

1. CONDUITS SHALL BE ROUTED UP THE EXTERIOR OF THE BUILDING TO A 24"x24"x12" PULLBOX.
2. EXISTING PULLBOX.
3. EXISTING 3"C. AND 2"C. SPARES TO BE USED FOR NEW CABLES. SEE SHEET E-701 FOR MORE INFORMATION.
4. OUTLINE OF FUTURE BUILDING.
5. PROVIDE CONNECTION TO THE EXISTING EMS SYSTEM. SEE SPECIAL EMS SYSTEM NOTE ON SHEET MP002 FOR REQUIREMENTS.

ENLARGED SITE SIGNAL PLAN SCALE: 1"=20'-0" | 1

SEARCHABLE SET 6-8-2015

architecture
westbergwhite
21471 CHAMBERS RD, SUITE 210
TUSTIN, CA 92780
(714) 508-1780 508-1790 FAX
1775 HANCOCK ST, SUITE 120
SAN DIEGO, CA 92110
(619) 542-1188 542-1663 FAX
719 S. McCLELLAND STREET
SANTA MARIA, CA 93454
(805) 346-2991 346-8750 FAX

CONSULTANT:
tk1sc COLLABORATIVE
15231 Laguna Canyon Road, Suite 100
Irvine, California 92618
949.751.5800 www.tk1sc.com
Jerry Leonhardt
tk1sc Job #: 2013-0638

PROJECT NAME:

Santa Ana College
Quad and Infrastructure Renovation
1530 West 17th Street
Santa Ana, California 92706

CLIENT:
Rancho Santiago Community College District
2323 North Broadway
Santa Ana, CA 92706

No.	Rev. Date	Description

JOB NO: 13022.02
DATE: 03/06/2015
DRAWN: MM / RR / RB
CHECK: JG / MM
ARCHITECT: PDW
ENGINEER:
ARCHITECT:

CONSULTANT:

REGISTERED PROFESSIONAL ENGINEER RAYMOND W. SWAYZE No. E15610 ELECTRICAL STATE OF CALIFORNIA 2/24/15

STATE:

IDENTIFICATION STAMP DIV. OF THE STATE ARCHITECT OFFICE OF REGULATION SERVICES
APP NO 04-113798
FILE NO 30-C2
AC ____ FLS ____ SS ____
DATE ____

SHEET DESCRIPTION:
PARTIAL SITE SIGNAL PLAN

SHEET NO:
E-209

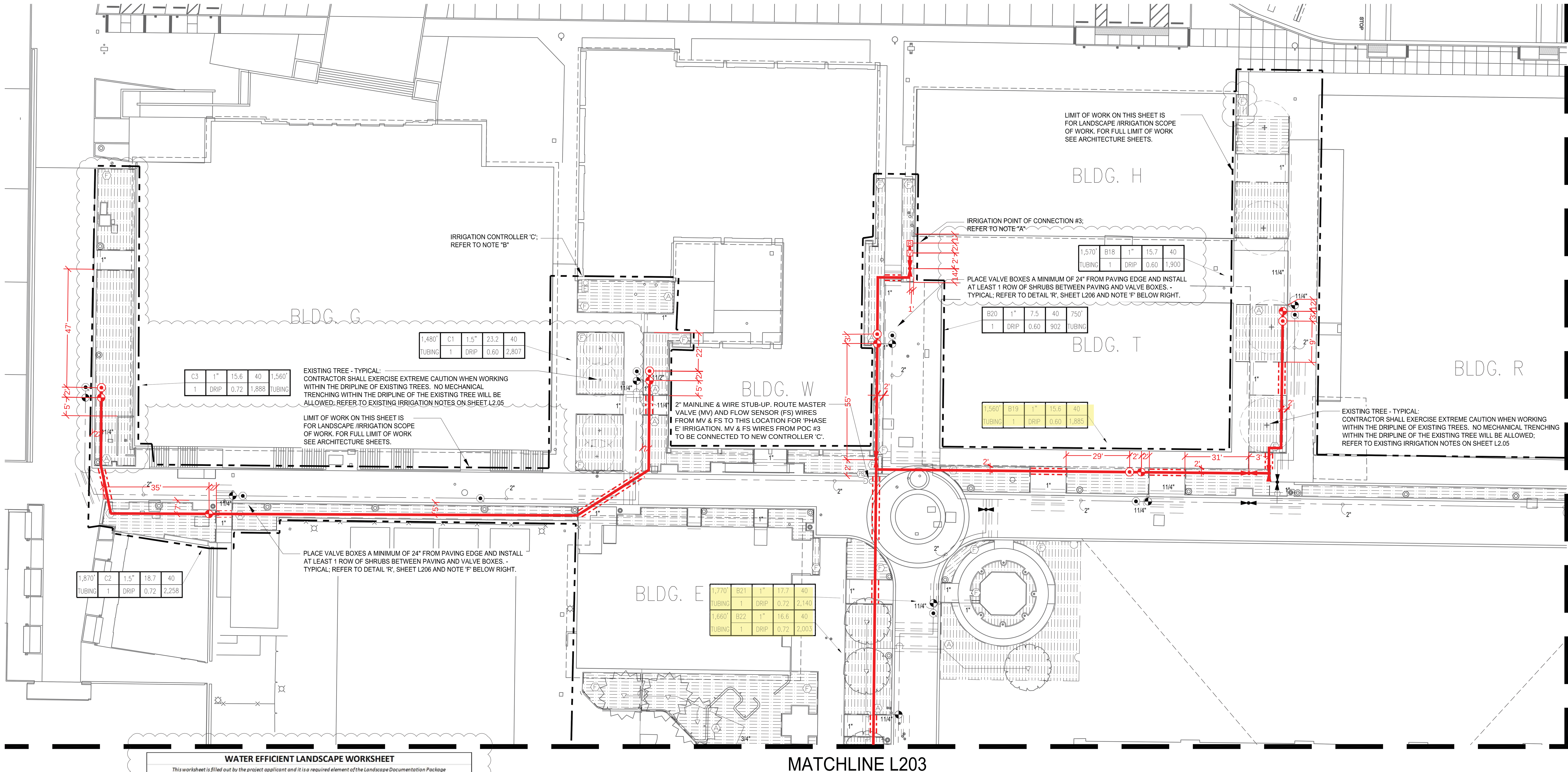

WATER EFFICIENT LANDSCAPE WORKSHEET

This worksheet is filled out by the project applicant and it is a required element of the Landscape Documentation Package

Project Name: SANTA ANA COLLEGE PHASE 5

Project Address: SANTA ANA, CALIFORNIA
POC - C

sweeney + associates IRRIGATION DESIGN AND CONSULTING

Reference Evapotranspiration (ETo) 48.3 In./Yr. **Residential Project?** No

Hydrozone # / Planting Description[a]	Plant Factor	Irrigation Method[b]	Irrigation Efficiency (IE)[c]	ETAF (PF / IE)	Landscape Area (Sq. Ft.)	ETAF x Area	Estimated Total Water Use (ETWU)[d]
Regular Landscape Areas							
1. Low Water Use Plantings	0.20	Drip	0.81	0.25	5,953	1,488	44,567
			0.75	0.00	0	0	0
			0.75	0.00	0	0	0
			0.75	0.00	0	0	0
	0.80	Direct Fill	1.00	0.80	0	0	0
				Totals:	5,953	1,488	
Special Landscape Areas							
1. Picnic Area				1.00	0	0	0
2. Active Turf				1.00	0	0	0
3. Vegetable Garden				1.00	0	0	0
				Totals:	0	0	
		Estimated Total Water Use (ETWU) Total:					44,567
		Maximum Applied Water Allowance (MAWA)[e]:					80,221

[a] Hydrozone # / Planting Description
E.g.
1.) Front Lawn
2.) Low Water Use Plantings
3.) Medium Water Use Plantings

[b] Irrigation Method
Overhead Spray of
Drip

[c] Irrigation Efficiency
0.75 for Spray
0.81 for Drip

[d] ***ETWU (Annual Gallons Required)*** = *ETo x 0.62 x ETAF x Area*
Where 0.62 is a conversion factor that converts acre-inches/acre/year to gallons/square foot/year.

[e] ***MAWA (Annual Gallons Allowed)*** = *ETo x 0.62 x [(ETAF x LA) + ((1 - ETAF) x SLA)]*
Where 0.62 is a conversion factor that converts acre-inches/acre/year to gallons/square foot/year, LA is the total landscape area in square feet, SLA is the total special landscape area in square feet, and ETAF is 0.55 for residential projects and 0.45 for non-residential projects.

Evapotranspiration Adjustment Factor (ETAF) Calculations

This non-residential project complies with the WELO and its average ETAF is less than **0.45**

Regular Landscape Areas	
Total ETAF x Area	1,488
Total Area	5,953
Average ETAF	**0.25**

All Landscape Areas	
Total ETAF x Area	1,488
Total Area	5,953
Average ETAF	**0.25**

WATER PRESSURE LOSS CALCULATIONS

WATER METER NUMBER	1	WATER METER SIZE (Inches)	
HYDRAULIC GRADE LINE (FT)		WATER METER ELEVATION (FT)	
ELEVATION DIFFERENCE (FT)		STATIC PRESSURE (PSI)	70.0
REMOTE CONTROL VALVE #	C2	REMOTE CONTROL VALVE SIZE (In.)	1.00
R.C.V. DEMAND (GPM)	23.2	TOTAL DEMAND (GPM)	23.2
HIGHEST HEAD SERVED (FT)		STATIC PRESSURE AT HIGHEST HEAD	

sweeney + associates IRRIGATION DESIGN AND CONSULTING

PRESSURE LOSS CALCULATION IS PROVIDED FOR THIS PROJECT BY SWEENEY & ASSOCIATES, INC. UNAUTHORIZED USE BY ANY OTHER PERSON, COMPANY OR PROJECT IS FORBIDDEN WITHOUT WRITTEN PERMISSION.

SIZE (Inches)	DESCRIPTION	FLOW	#	LOSS	
	SERVICE LINE (50 FT OF TYPE K COPPER)	23.2	1	0.00	PSI
	WATER METER (XXXX TYPE)	23.2	2	0.00	PSI
	BACKFLOW PREVENTER (R/P TYPE)	23.2	3	0.00	PSI
	FILTRATION (WYE FILTER)	23.2	4	0.00	PSI
	PRESSURE REGULATOR (WILKINS 500HLR)	23.2	5	0.00	PSI
	BFD ASSEMBLY PIPING (BRASS W/ 4 ELLS)	23.2	6	0.00	PSI
1.50	MASTER CONTROL VALVE	23.2	7	0.45	PSI
1.00	FLOW SENSOR	23.2	8	1.00	PSI
2.00	ISOLATION VALVES (BALL TYPE)	23.2	9	1.00	PSI
2.00	100 FEET OF MAINLINE: CL. 315 PVC	23.2	10	0.04	PSI
	X,XXX FEET OF MAINLINE: CL. 315 PVC	23.2	11	0.00	PSI
	X,XXX FEET OF MAINLINE: CL. 315 PVC	23.2	12	0.00	PSI
2.00	2 - 90 DEGREE ELBOWS	23.2	13	0.01	PSI
1.00	REMOTE CONTROL VALVE ASSEMBLY	23.2	14	4.00	PSI
10%	LATERAL LINE LOSSES	23.2	15	4.00	PSI
20%	FITTING LOSS (IN ADDITION TO ELBOWS SHOWN)	N/A	16	0.01	PSI
0.00	ELEVATION CHANGE (P.O.C. TO HIGHEST HEAD)	N/A	17	0.00	PSI
	TOTAL SYSTEM PRESSURE LOSS (SUM OF #1 THRU #17)		18	10.5	PSI
	PRESSURE REQUIRED AT HEAD (OPERATING PRESSURE)		19	40.0	PSI
	TOTAL PRESSURE REQUIRED (SUM OF #18 AND #19)		20	50.5	PSI
	MINIMUM STATIC WATER PRESSURE (FROM ABOVE)		21	70.0	PSI
	RESIDUAL PRESSURE (SUBTRACT #20 FROM #21)		22	19.5	PSI
	SET PRV OR MCV AT (#20 PLUS 10 PSI)		23	60.5	PSI
	PRESSURE BOOST, IF REQUIRED (SET TO ACHIEVE 20 PSI RESIDUAL)		24	N/A	PSI

IRRIGATION CONTROLLER RUN TIMES

POC or Controller				JAN	FEB	MAR	APR	MAY	JUN	JUL	AUG	SEP	OCT	NOV	DEC	Total / Avg.
C	ETo / Month (Inches):			2.20	2.70	3.70	4.50	4.60	5.40	6.20	6.10	4.70	3.70	2.50	2.00	48.30
	ETo / Day (Inches):			0.07	0.10	0.12	0.15	0.15	0.18	0.20	0.20	0.16	0.12	0.08	0.06	0.13
	Irrigation Days / Week:			1	1	1	1	1	1	1	1	1	1	1	1	
Plant / Irrig. Type	AKc	Pr Rate	IE	JAN	FEB	MAR	APR	MAY	JUN	JUL	AUG	SEP	OCT	NOV	DEC	
Shrubs	0.20	0.72	0.81	10.2	13.9	17.2	21.6	21.4	25.9	28.8	28.3	22.6	17.2	12.0	9.3	Min./Day/Zone
Drip Tubing	Number of Zones:		3	30.7	41.7	51.6	64.8	64.1	77.8	86.4	85.0	67.7	51.6	36.0	27.9	Total Min./Day
	Total Number of Zones:		3	31	42	52	65	64	78	86	85	68	52	36	28	Total Min./Day
	Total Controller Run Time in Hours:			0.51	0.69	0.86	1.08	1.07	1.30	1.44	1.42	1.13	0.86	0.60	0.46	Total Hrs./Day
				JAN	FEB	MAR	APR	MAY	JUN	JUL	AUG	SEP	OCT	NOV	DEC	

Note: These schedules are intended only for compliance with local municipal codes and the water efficient landscape ordinance. These calculations represent the **MAXIMUM REASONABLE** run times and are used to ensure that all irrigation may be completed during the specific watering window allowed. These schedules do not include rainfall, site soil types, specicic exposures (shade versus sun), actual irrigation days, or specific slope position. It is solely the responsibility of the irrigation contractor to program the controller as required to apply the correct amount of irrigation water for the landscape. All smart controllers shall be programmed using the specified ET or weather sensing equipment, satellite provided ET data, soil moisture sensors, and rain shut off devices as required. Contractor shall provide a controller schedule inside the controller cabinet prior to final turnover of the project to the owner.

I HAVE COMPLIED WITH THE CRITERIA OF THE IRRIGATION GUIDELINES AND APPLIED THEM ACCORDINGLY FOR THE EFFICIENT USE OF WATER IN THE IRRIGATION DESIGN PLAN

PIERRE LANDSCAPE
AS-BUILT DRAWING

NOTE A:
POINT OF CONNECTION #3 SHALL BE A CONNECTION DOWNSTREAM OF THE EXISTING 11/2" BACKFLOW PREVENTION DEVICE. VERIFY THE ACTUAL LOCATION, SIZE AND WATER PRESSURE IN THE FIELD PRIOR TO STARTING WORK. IF ANY OF THE POC INFORMATION SHOWN ON THESE DRAWING IS FOUND TO BE DIFFERENT THAN THE ACTUAL POC INFORMATION GATHERED IN THE FIELD, IMMEDIATELY NOTIFY THE LANDSCAPE ARCHITECT AND IRRIGATION CONSULTANT. SHOULD THE CONTRACTOR FAIL TO VERIFY THE POC INFORMATION ANY CHANGES REQUIRED BY LOW PRESSURE OR VOLUME SHALL BE THE SOLE RESPONSIBILITY OF THE CONTRACTOR.

STATIC WATER PRESSURE	70.0 PSI
DESIGN WATER PRESSURE	50.5 PSI
MAXIMUM SYSTEM DEMAND	23.2 GPM
RESIDUAL WATER PRESSURE	19.5 PSI

NOTE B:
CONTROLLER 'C' SHALL BE A NEW CALSENSE 24 STATION CONTROLLER. INSTALLED IN A STAINLESS STEEL ENCLOSURE (SEE LEGEND FOR COMPLETE MODEL NUMBER AND TYPE). FINAL LOCATION OF CONTROLLER AND ELECTRICAL POC SHALL BE CONFIRMED WITH OWNER'S AUTHORIZED REPRESENTATIVE PRIOR TO STARTING WORK.

NOTE C:
MAINLINE AND RELATED EQUIPMENT SHOWN WITHIN PAVING FOR CLARITY ONLY, ACTUAL MAINLINE AND RELATED EQUIPMENT LOCATION TO BE WITHIN PLANTERS AND A MINIMUM OF 18" OFF ADJACENT HARDSCAPE AND OTHER OBSTACLES TYP.

NOTE D:
CONTRACTOR SHALL ADJUST ALL HEADS AS REQUIRED TO ACCOMMODATE ANY VERTICAL OBSTRUCTIONS THAT MAY OCCUR, INCLUDING BUT NOT LIMITED TO LIGHT POLES, FIRE HYDRANTS, ETC. VERIFY ALL HEAD LAYOUT WITH OWNER'S AUTHORIZED REPRESENTATIVE PRIOR TO STARTING WORK.

NOTE E:
BUBBLERS AND LATERAL LINES ARE SHOWN WITHIN PAVING FOR CLARITY ONLY, ACTUAL LOCATION TO BE WITHIN PLANTER. BUBBLERS SHALL BE ALIGNED WITH TREES AND AS DIRECTED BY OWNER'S AUTHORIZED REPRESENTATIVE. CONFIRM ALL LAYOUT IN FIELD WITH OWNER'S AUTHORIZED REPRESENTATIVE PRIOR TO STARTING WORK.

NOTE F:
PLANTING LAYOUT TAKES PRIORITY OVER IRRIGATION EQUIPMENT LOCATIONS. DO NOT AFFECT HEDGE ROW; REFER TO PLANTING PLAN.

sweeney + associates
IRRIGATION DESIGN AND CONSULTING
321 Rampart Street, Suite 209
Orange, Ca 92868
e: info@sweeneyassoc.com | t: (714) 938-0456
w: www.sweeneyassoc.com | f: (714) 938-0456

0' 10' 20' 40'
SCALE: 1" = 20'-0"
NORTH

architecture
westbergwhite
14471 CHAMBERS RD, SUITE 210
TUSTIN, CA 92780
(714) 508-1780 508-1790 FAX
1775 HANCOCK ST, SUITE 120
SAN DIEGO, CA 92110
(619) 542-1188 542-1663 FAX
719 S. McCLELLAND STREET
SANTA MARIA, CA 93454
(805) 346-2991 346-8790 FAX

CONSULTANT:
SWA
Laguna Beach
Dallas
Houston
Los Angeles
San Francisco
Sausalito
Shanghai
570 Glenneyre Street
Laguna Beach
CA 92651.2453
Fax 949.497.5471
Ph 949.497.7861
www.swagroup.com

PROJECT NAME:
Santa Ana College
Quad and Infrastructure Renovation
1530 West 17th Street
Santa Ana, California 92706

CLIENT:
Rancho Santiago Community College District
2323 North Broadway
Santa Ana, CA 92706

No.	Rev. Date	Description

JOB NO:	WBWS401
DATE:	03/06/2015
DRAWN:	SR
CHECK:	SR/DG
ARCHITECT:	PDW
ENGINEER:	
ARCHITECT:	

CONSULTANT:
REGISTERED LANDSCAPE ARCHITECT
DAVID J. BERKSON
Signature
1/12/16
Date
STATE OF CALIFORNIA

STATE:
IDENTIFICATION STAMP
DIV. OF THE STATE ARCHITECT
OFFICE OF REGULATION SERVICES
APP NO: 04-113798 30-C2
AC ____ FLS ____ SS ____
DATE ____

SHEET DESCRIPTION:
IRRIGATION PLAN

SHEET NO:
L201
Bulletin 13.1

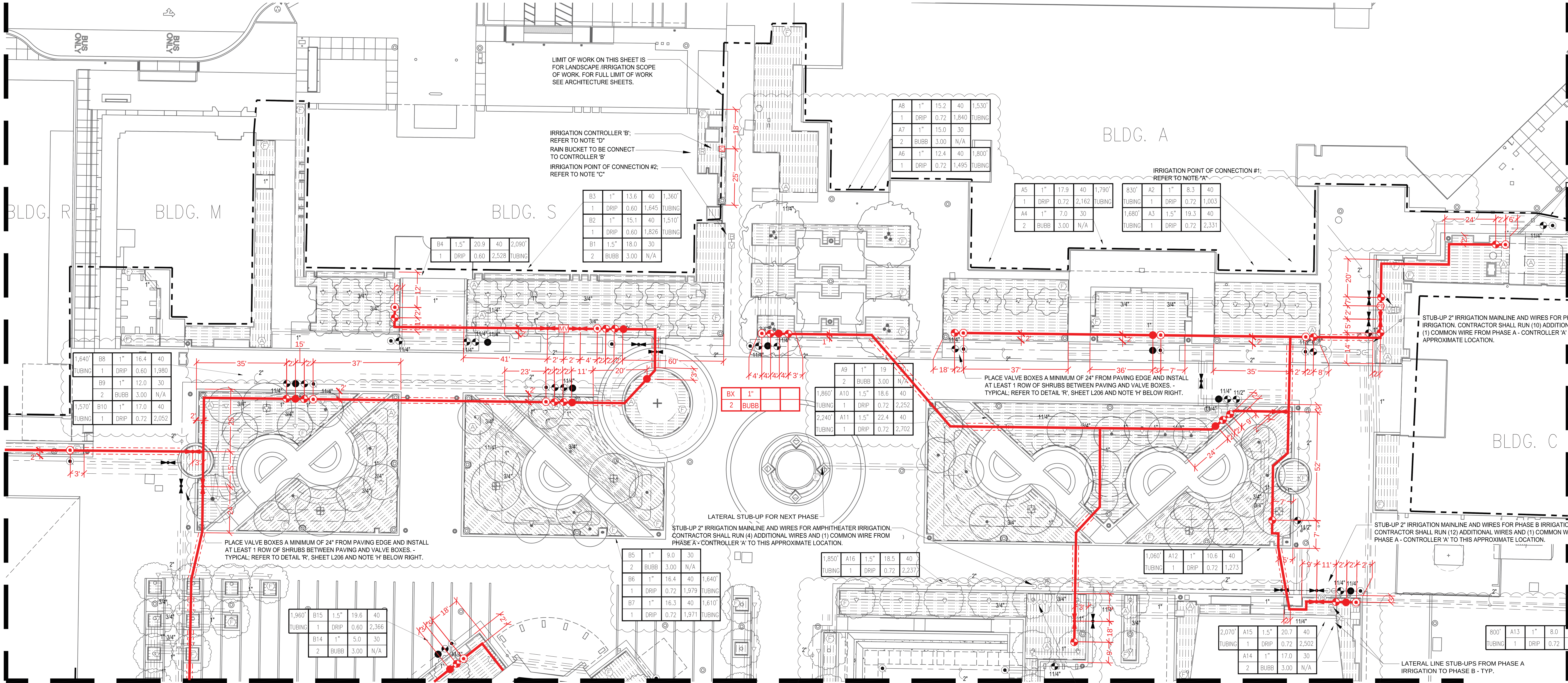

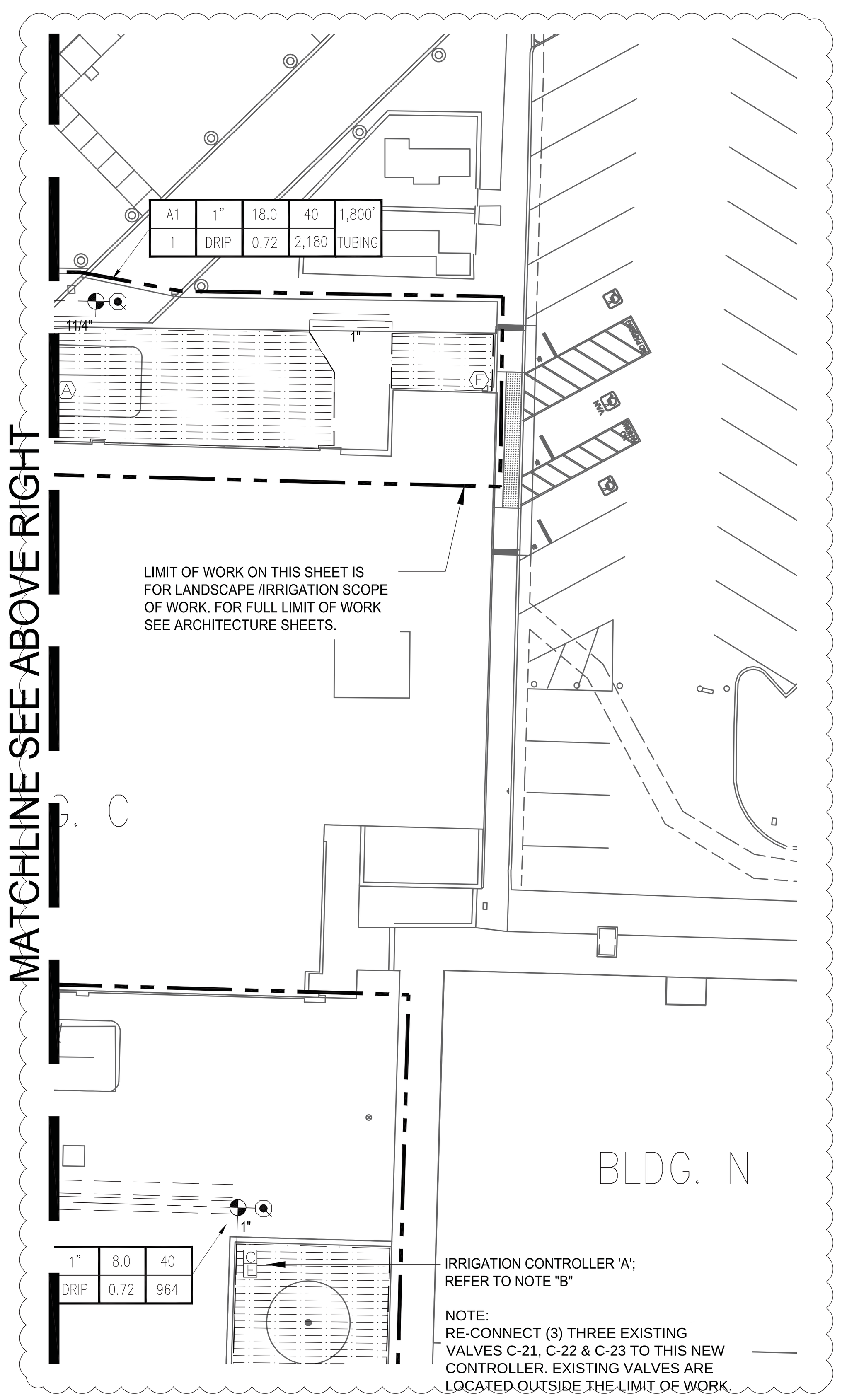

PIERRE LANDSCAPE
AS-BUILT DRAWING

WATER PRESSURE LOSS CALCULATIONS

WATER METER NUMBER	1	WATER METER SIZE (Inches)	
HYDRAULIC GRADE LINE (FT)		WATER METER ELEVATION (FT)	
ELEVATION DIFFERENCE (FT)		STATIC PRESSURE (PSI)	70.0
REMOTE CONTROL VALVE #	A11	REMOTE CONTROL VALVE SIZE (In.)	1.50
R.C.V. DEMAND (GPM)	22.4	TOTAL DEMAND (GPM)	22.4
HIGHEST HEAD SERVED (FT)		STATIC PRESSURE AT HIGHEST HEAD	

sweeney + associates IRRIGATION DESIGN AND CONSULTING — PRESSURE LOSS CALCULATION IS PROVIDED FOR THIS PROJECT BY SWEENEY & ASSOCIATES, INC. UNAUTHORIZED USE BY ANY OTHER PERSON, COMPANY OR PROJECT IS FORBIDDEN WITHOUT WRITTEN PERMISSION.

SIZE (Inches)	DESCRIPTION	FLOW	#	LOSS	
	SERVICE LINE (50 FT OF TYPE K COPPER)	22.4	1	0.00	PSI
	WATER METER (XXXX TYPE)	22.4	2	0.00	PSI
	BACKFLOW PREVENTER (R/P TYPE)	22.4	3	0.00	PSI
	FILTRATION (WYE FILTER)	22.4	4	0.00	PSI
	PRESSURE REGULATOR (WILKINS 500HLR)	22.4	5	0.00	PSI
	BFD ASSEMBLY PIPING (BRASS W/ 4 ELLS)	22.4	6	0.00	PSI
1.50	MASTER CONTROL VALVE	22.4	7	0.62	PSI
1.00	FLOW SENSOR	22.4	8	1.00	PSI
2.00	ISOLATION VALVES (BALL TYPE)	22.4	9	1.00	PSI
2.00	145 FEET OF MAINLINE: CL. 315 PVC	22.4	10	0.70	PSI
	X,XXX FEET OF MAINLINE: CL. 315 PVC	22.4	11	0.00	PSI
	X,XXX FEET OF MAINLINE: CL. 315 PVC	22.4	12	0.00	PSI
2.00	2 - 90 DEGREE ELBOWS	22.4	13	0.16	PSI
1.50	REMOTE CONTROL VALVE ASSEMBLY	22.4	14	1.50	PSI
10%	LATERAL LINE LOSSES	22.4	15	4.00	PSI
20%	FITTING LOSS (IN ADDITION TO ELBOWS SHOWN)	N/A	16	0.14	PSI
0.00	ELEVATION CHANGE (P.O.C. TO HIGHEST HEAD)	N/A	17	0.00	PSI
	TOTAL SYSTEM PRESSURE LOSS (SUM OF #1 THRU #17)		18	9.1	PSI
	PRESSURE REQUIRED AT HEAD (OPERATING PRESSURE)		19	40.0	PSI
	TOTAL PRESSURE REQUIRED (SUM OF #18 AND #19)		20	49.1	PSI
	MINIMUM STATIC WATER PRESSURE (FROM ABOVE)		21	70.0	PSI
	RESIDUAL PRESSURE (SUBTRACT #20 FROM #21)		22	20.9	PSI
	SET PRV OR MCV AT (#20 PLUS 10 PSI)		23	59.1	PSI
	PRESSURE BOOST, IF REQUIRED (SET TO ACHIEVE 20 PSI RESIDUAL)		24	N/A	PSI

IRRIGATION CONTROLLER RUN TIMES

POC or Controller				JAN	FEB	MAR	APR	MAY	JUN	JUL	AUG	SEP	OCT	NOV	DEC	Total / Avg.
A	ETo / Month (Inches):			2.20	2.70	3.70	4.50	4.60	5.40	6.20	6.10	4.70	3.70	2.50	2.00	48.30
	ETo / Day (Inches):			0.07	0.10	0.12	0.15	0.15	0.18	0.20	0.20	0.16	0.12	0.08	0.06	0.13
	Irrigation Days / Week:			1	1	1	1	1	1	1	1	1	1	1	1	
Plant / Irrig. Type	AKc	Pr Rate	IE	JAN	FEB	MAR	APR	MAY	JUN	JUL	AUG	SEP	OCT	NOV	DEC	
Shrubs	0.20	0.72	0.81	10.2	13.9	17.2	21.6	21.4	25.9	28.8	28.3	22.6	17.2	12.0	9.3	Min./Day/Zone
Drip Tubing	Number of Zones:		14	143.1	194.4	240.7	302.5	299.2	363.0	403.3	396.8	315.9	240.7	168.0	130.1	Total Min./Day
Trees	0.40	3.00	0.75	5.3	7.2	8.9	11.2	11.1	13.4	14.9	14.7	11.7	8.9	6.2	4.8	Min./Day/Zone
Bubblers	Number of Zones:		5	26.5	36.0	44.6	56.0	55.4	67.2	74.7	73.5	58.5	44.6	31.1	24.1	Total Min./Day
Total Number of Zones:			19	170	230	285	358	355	430	478	470	374	285	199	154	Total Min./Day
Total Controller Run Time in Hours:				2.83	3.84	4.75	5.97	5.91	7.17	7.97	7.84	6.24	4.75	3.32	2.57	Total Hrs./Day
				JAN	FEB	MAR	APR	MAY	JUN	JUL	AUG	SEP	OCT	NOV	DEC	

Note: These schedules are intended only for compliance with local municipal codes and the water efficient landscape ordinance. These calculations represent the MAXIMUM REASONABLE run times and are used to ensure that all irrigation may be completed during the specific watering window allowed. These schedules do not include rainfall, site soil types, specicic exposures (shade versus sun), actual irrigation days, or specific slope position. It is solely the responsibility of the irrigation contractor to program the controller as required to apply the correct amount of irrigation water for the landscape. All smart controllers shall be programmed using the specified ET or weather sensing equipment, satellite provided ET data, soil moisture sensors, and rain shut off devices as required. Contractor shall provide a controller schedule inside the controller cabinet prior to final turnover of the project to the owner.

WATER EFFICIENT LANDSCAPE WORKSHEET

This worksheet is filled out by the project applicant and it is a required element of the Landscape Documentation Package

Project Name: SANTA ANA COLLEGE PHASE 5

Project Address: SANTA ANA, CALIFORNIA
POC -A

sweeney + associates IRRIGATION DESIGN AND CONSULTING

Reference Evapotranspiration (ETo) 48.3 **In./Yr.** **Residential Project?** No

Hydrozone # / Planting Description[a]	Plant Factor	Irrigation Method[b]	Irrigation Efficiency (IE)[c]	ETAF (PF / IE)	Landscape Area (Sq. Ft.)	ETAF x Area	Estimated Total Water Use (ETWU)[d]
Regular Landscape Areas							
1. Low Water Use Plantings	0.20	Drip	0.81	0.25	25,891	6,473	193,833
			0.75	0.00	0	0	0
			0.75	0.00	0	0	0
			0.75	0.00	0	0	0
	0.80	Direct Fill	1.00	0.80	0	0	0
				Totals:	25,891	6,473	
Special Landscape Areas							
1. Picnic Area	[redacted]			1.00	0	0	0
2. Active Turf				1.00	0	0	0
3. Vegetable Garden				1.00	0	0	0
				Totals:	0	0	
				Estimated Total Water Use (ETWU) Total:			193,833
				Maximum Applied Water Allowance (MAWA)[e]:			348,899

[a] Hydrozone # / Planting Description
E.g.
1.) Front Lawn
2.) Low Water Use Plantings
3.) Medium Water Use Plantings

[b] Irrigation Method
Overhead Spray of
Drip

[c] Irrigation Efficiency
0.75 for Spray
0.81 for Drip

***[d] ETWU (Annual Gallons Required)** = ETo x 0.62 x ETAF x Area*
Where 0.62 is a conversion factor that converts acre-inches/acre/year to gallons/square foot/year.

***[e] MAWA (Annual Gallons Allowed)** = ETo x 0.62 x [(ETAF x LA) + ((1 - ETAF) x SLA)]*
Where 0.62 is a conversion factor that converts acre-inches/acre/year to gallons/square foot/year, LA is the total landscape area in square feet, SLA is the total special landscape area in square feet, and ETAF is 0.55 for residential projects and 0.45 for non-residential projects.

Evapotranspiration Adjustment Factor (ETAF) Calculations

This non-residential project complies with the WELO and its average ETAF is less than 0.45

Regular Landscape Areas	
Total ETAF x Area	6,473
Total Area	25,891
Average ETAF	**0.25**

All Landscape Areas	
Total ETAF x Area	6,473
Total Area	25,891
Average ETAF	**0.25**

I HAVE COMPLIED WITH THE CRITERIA OF THE IRRIGATION GUIDELINES AND APPLIED THEM ACCORDINGLY FOR THE EFFICIENT USE OF WATER IN THE IRRIGATION DESIGN PLAN

sweeney + associates
IRRIGATION DESIGN AND CONSULTING
321 Rampart Street, Suite 209
Orange, Ca 92868
e: info@sweeneyassoc.com | t: (714) 938-0456
w: www.sweeneyassoc.com | f: (714) 938-0456

NOTE A:
POINT OF CONNECTION #1 SHALL BE A CONNECTION DOWNSTREAM OF THE EXISTING 11/2" BACKFLOW PREVENTION DEVICE. VERIFY THE ACTUAL LOCATION, SIZE AND WATER PRESSURE IN THE FIELD PRIOR TO STARTING WORK. IF ANY OF THE POC INFORMATION SHOWN ON THESE DRAWING IS FOUND TO BE DIFFERENT THAN THE ACTUAL POC INFORMATION GATHERED IN THE FIELD, IMMEDIATELY NOTIFY THE LANDSCAPE ARCHITECT AND IRRIGATION CONSULTANT. SHOULD THE CONTRACTOR FAIL TO VERIFY THE POC INFORMATION ANY CHANGES REQUIRED BY LOW PRESSURE OR VOLUME SHALL BE THE SOLE RESPONSIBILITY OF THE CONTRACTOR.

STATIC WATER PRESSURE	70.0 PSI
DESIGN WATER PRESSURE	49.1 PSI
MAXIMUM SYSTEM DEMAND	22.4 GPM
RESIDUAL WATER PRESSURE	20.9 PSI

NOTE B:
REPLACE EXISTING CONTROLLER WITH NEW CONTROLLER 'A'. NEW CONTROLLER 'A' SHALL BE A NEW CALSENSE 48 STATION CONTROLLER INSTALLED IN A STAINLESS STEEL ENCLOSURE (SEE LEGEND FOR COMPLETE MODEL NUMBER AND TYPE). FINAL LOCATION OF CONTROLLER AND ELECTRICAL POC SHALL BE CONFIRMED WITH OWNER'S AUTHORIZED REPRESENTATIVE PRIOR TO STARTING WORK.

NOTE C:
POINT OF CONNECTION #2 SHALL BE A CONNECTION DOWNSTREAM OF THE EXISTING 11/2" BACKFLOW PREVENTION DEVICE. VERIFY THE ACTUAL LOCATION, SIZE AND WATER PRESSURE IN THE FIELD PRIOR TO STARTING WORK. IF ANY OF THE POC INFORMATION SHOWN ON THESE DRAWING IS FOUND TO BE DIFFERENT THAN THE ACTUAL POC INFORMATION GATHERED IN THE FIELD, IMMEDIATELY NOTIFY THE LANDSCAPE ARCHITECT AND IRRIGATION CONSULTANT. SHOULD THE CONTRACTOR FAIL TO VERIFY THE POC INFORMATION ANY CHANGES REQUIRED BY LOW PRESSURE OR VOLUME SHALL BE THE SOLE RESPONSIBILITY OF THE CONTRACTOR.

STATIC WATER PRESSURE	70.0 PSI
DESIGN WATER PRESSURE	52.8 PSI
MAXIMUM SYSTEM DEMAND	24.8 GPM
RESIDUAL WATER PRESSURE	17.2 PSI

NOTE D:
REPLACE EXISTING CONTROLLER WITH NEW CONTROLLER 'B'. NEW CONTROLLER 'B' SHALL BE A NEW CALSENSE 48 STATION CONTROLLER INSTALLED IN A STAINLESS STEEL ENCLOSURE (SEE LEGEND FOR COMPLETE MODEL NUMBER AND TYPE). FINAL LOCATION OF CONTROLLER AND ELECTRICAL POC SHALL BE CONFIRMED WITH OWNER'S AUTHORIZED REPRESENTATIVE PRIOR TO STARTING WORK.

NOTE E:
MAINLINE AND RELATED EQUIPMENT SHOWN WITHIN PAVING FOR CLARITY ONLY, ACTUAL MAINLINE AND RELATED EQUIPMENT LOCATION TO BE WITHIN PLANTERS AND A MINIMUM OF 18" OFF ADJACENT HARDSCAPE AND OTHER OBSTACLES TYP.

NOTE F:
CONTRACTOR SHALL ADJUST ALL HEADS AS REQUIRED TO ACCOMMODATE ANY VERTICAL OBSTRUCTIONS THAT MAY OCCUR, INCLUDING BUT NOT LIMITED TO LIGHT POLES, FIRE HYDRANTS, ETC. VERIFY ALL HEAD LAYOUT WITH OWNER'S AUTHORIZED REPRESENTATIVE PRIOR TO STARTING WORK.

NOTE G:
BUBBLERS AND LATERAL LINES ARE SHOWN WITHIN PAVING FOR CLARITY ONLY, ACTUAL LOCATION TO BE WITHIN PLANTER. BUBBLERS SHALL BE ALIGNED WITH TREES AND AS DIRECTED BY OWNER'S AUTHORIZED REPRESENTATIVE. CONFIRM ALL LAYOUT IN FIELD WITH OWNER'S AUTHORIZED REPRESENTATIVE PRIOR TO STARTING WORK.

NOTE H:
PLANTING LAYOUT TAKES PRIORITY OVER IRRIGATION EQUIPMENT LOCATIONS. DO NOT AFFECT HEDGE ROW; REFER TO PLANTING PLAN.

0' 10' 20' 40'
SCALE: 1" = 20'-0"
NORTH

architecture
westbergwhite
14471 CHAMBERS RD, SUITE 210
TUSTIN, CA 92780
(714) 508-1780 508-1790 FAX
1775 HANCOCK ST, SUITE 120
SAN DIEGO, CA 92110
(619) 542-1188 542-1663 FAX
719 S. McCLELLAND STREET
SANTA MARIA, CA 93454
(805) 346-2991 346-8790 FAX

CONSULTANT:
SWA
Laguna Beach
Dallas
Houston
Los Angeles
San Francisco
Sausalito
Shanghai
570 Glenneyre Street
Laguna Beach
CA 92651.2453
Fax 949.497.5471
Ph 949.497.7861
www.swagroup.com

PROJECT NAME:
Santa Ana College
Quad and Infrastructure Renovation
1530 West 17th Street
Santa Ana, California 92706

CLIENT:
Rancho Santiago Community College District
2323 North Broadway
Santa Ana, CA 92706

No.	Rev. Date	Description

JOB NO:	WBWS401
DATE:	03/06/2016
DRAWN:	SR
CHECK:	SR/DG
ARCHITECT:	PDW
ENGINEER:	

ARCHITECT:

CONSULTANT:
REGISTERED LANDSCAPE ARCHITECT — D J. BERKSON 335[illegible] — Signature — 1/12/16 — Date — STATE OF CALIFORNIA

STATE:
IDENTIFICATION STAMP
DIV. OF THE STATE ARCHITECT
OFFICE OF REGULATION SERVICES
APP NO: 04-113798
30-C2
AC ____ FLS ____ SS ____
DATE ________

SHEET DESCRIPTION:
IRRIGATION PLAN

SHEET NO:
L202

Bulletin 13.1

MATCHLINE L201

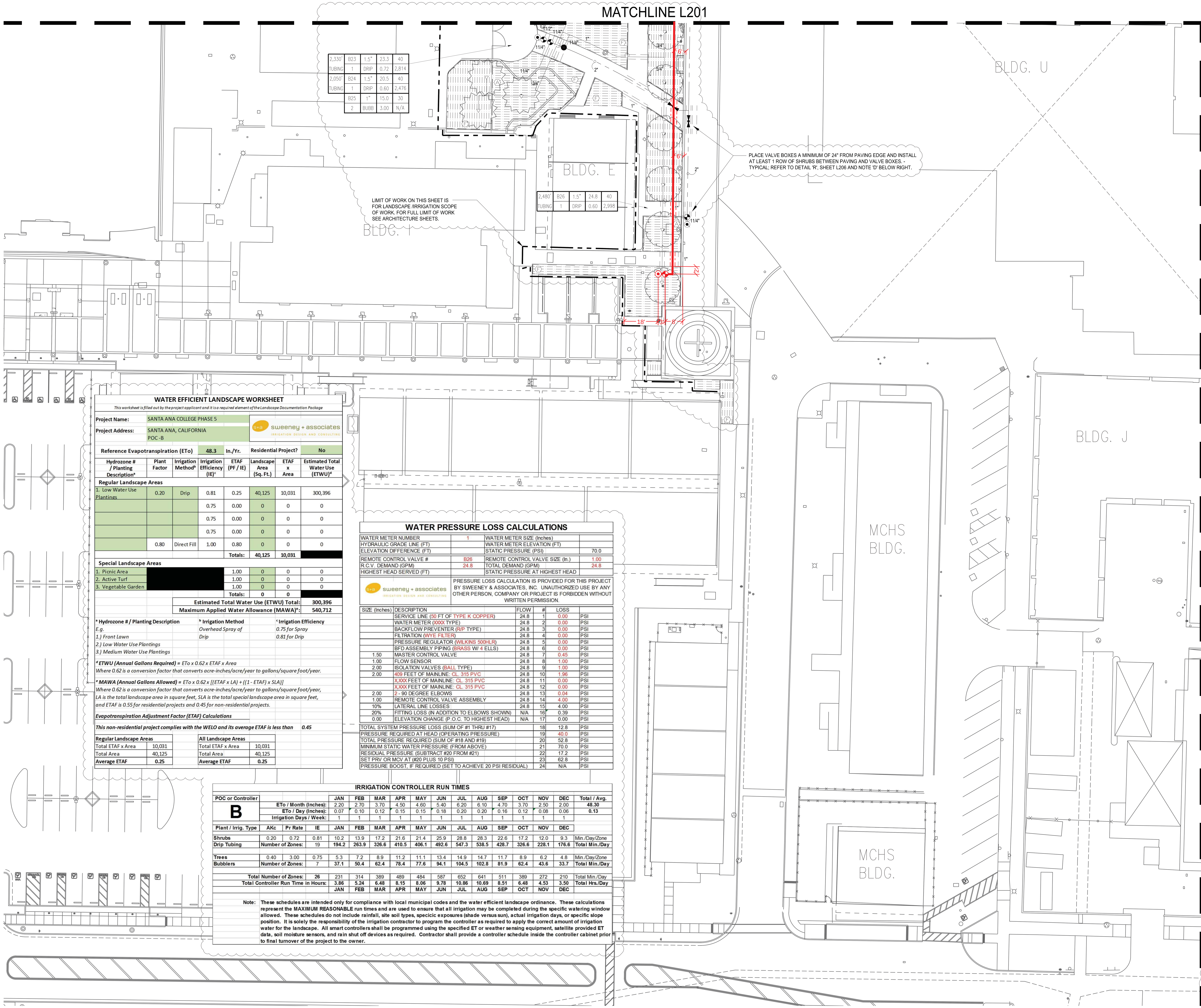

WATER EFFICIENT LANDSCAPE WORKSHEET

This worksheet is filled out by the project applicant and it is a required element of the Landscape Documentation Package

Project Name: SANTA ANA COLLEGE PHASE 5

Project Address: SANTA ANA, CALIFORNIA
POC -B

sweeney + associates — IRRIGATION DESIGN AND CONSULTING

Reference Evapotranspiration (ETo) 48.3 In./Yr. **Residential Project?** No

Hydrozone # / Planting Description[a]	Plant Factor	Irrigation Method[b]	Irrigation Efficiency (IE)[c]	ETAF (PF / IE)	Landscape Area (Sq. Ft.)	ETAF x Area	Estimated Total Water Use (ETWU)[d]
Regular Landscape Areas							
1. Low Water Use Plantings	0.20	Drip	0.81	0.25	40,125	10,031	300,396
			0.75	0.00	0	0	0
			0.75	0.00	0	0	0
			0.75	0.00	0	0	0
	0.80	Direct Fill	1.00	0.80	0	0	0
				Totals:	**40,125**	**10,031**	
Special Landscape Areas							
1. Picnic Area				1.00	0	0	0
2. Active Turf				1.00	0	0	0
3. Vegetable Garden				1.00	0	0	0
				Totals:	**0**	**0**	
		Estimated Total Water Use (ETWU) Total:					**300,396**
		Maximum Applied Water Allowance (MAWA)[e]:					**540,712**

[a] **Hydrozone # / Planting Description** — *E.g. 1.) Front Lawn 2.) Low Water Use Plantings 3.) Medium Water Use Plantings*

[b] **Irrigation Method** — *Overhead Spray of Drip*

[c] **Irrigation Efficiency** — *0.75 for Spray; 0.81 for Drip*

[d] ***ETWU (Annual Gallons Required) =*** *ETo x 0.62 x ETAF x Area*
Where 0.62 is a conversion factor that converts acre-inches/acre/year to gallons/square foot/year.

[e] ***MAWA (Annual Gallons Allowed) =*** *ETo x 0.62 x [(ETAF x LA) + ((1 - ETAF) x SLA)]*
Where 0.62 is a conversion factor that converts acre-inches/acre/year to gallons/square foot/year, LA is the total landscape area in square feet, SLA is the total special landscape area in square feet, and ETAF is 0.55 for residential projects and 0.45 for non-residential projects.

Evapotranspiration Adjustment Factor (ETAF) Calculations

This non-residential project complies with the WELO and its average ETAF is less than *0.45*

Regular Landscape Areas		All Landscape Areas	
Total ETAF x Area	10,031	Total ETAF x Area	10,031
Total Area	40,125	Total Area	40,125
Average ETAF	**0.25**	**Average ETAF**	**0.25**

WATER PRESSURE LOSS CALCULATIONS

WATER METER NUMBER	1	WATER METER SIZE (Inches)	
HYDRAULIC GRADE LINE (FT)		WATER METER ELEVATION (FT)	
ELEVATION DIFFERENCE (FT)		STATIC PRESSURE (PSI)	70.0
REMOTE CONTROL VALVE #	B26	REMOTE CONTROL VALVE SIZE (In.)	1.00
R.C.V. DEMAND (GPM)	24.8	TOTAL DEMAND (GPM)	24.8
HIGHEST HEAD SERVED (FT)		STATIC PRESSURE AT HIGHEST HEAD	

sweeney + associates — PRESSURE LOSS CALCULATION IS PROVIDED FOR THIS PROJECT BY SWEENEY & ASSOCIATES, INC. UNAUTHORIZED USE BY ANY OTHER PERSON, COMPANY OR PROJECT IS FORBIDDEN WITHOUT WRITTEN PERMISSION.

SIZE (Inches)	DESCRIPTION	FLOW	#	LOSS	
	SERVICE LINE (50 FT OF TYPE K COPPER)	24.8	1	0.00	PSI
	WATER METER (XXXX TYPE)	24.8	2	0.00	PSI
	BACKFLOW PREVENTER (R/P TYPE)	24.8	3	0.00	PSI
	FILTRATION (WYE FILTER)	24.8	4	0.00	PSI
	PRESSURE REGULATOR (WILKINS 500HLR)	24.8	5	0.00	PSI
	BFD ASSEMBLY PIPING (BRASS W/ 4 ELLS)	24.8	6	0.00	PSI
1.50	MASTER CONTROL VALVE	24.8	7	0.45	PSI
1.00	FLOW SENSOR	24.8	8	1.00	PSI
2.00	ISOLATION VALVES (BALL TYPE)	24.8	9	1.00	PSI
2.00	409 FEET OF MAINLINE: CL. 315 PVC	24.8	10	1.96	PSI
	X,XXX FEET OF MAINLINE: CL. 315 PVC	24.8	11	0.00	PSI
	X,XXX FEET OF MAINLINE: CL. 315 PVC	24.8	12	0.00	PSI
2.00	2 - 90 DEGREE ELBOWS	24.8	13	0.04	PSI
1.00	REMOTE CONTROL VALVE ASSEMBLY	24.8	14	4.00	PSI
10%	LATERAL LINE LOSSES	24.8	15	4.00	PSI
20%	FITTING LOSS (IN ADDITION TO ELBOWS SHOWN)	N/A	16	0.39	PSI
0.00	ELEVATION CHANGE (P.O.C. TO HIGHEST HEAD)	N/A	17	0.00	PSI
	TOTAL SYSTEM PRESSURE LOSS (SUM OF #1 THRU #17)		18	12.8	PSI
	PRESSURE REQUIRED AT HEAD (OPERATING PRESSURE)		19	40.0	PSI
	TOTAL PRESSURE REQUIRED (SUM OF #18 AND #19)		20	52.8	PSI
	MINIMUM STATIC WATER PRESSURE (FROM ABOVE)		21	70.0	PSI
	RESIDUAL PRESSURE (SUBTRACT #20 FROM #21)		22	17.2	PSI
	SET PRV OR MCV AT (#20 PLUS 10 PSI)		23	62.8	PSI
	PRESSURE BOOST, IF REQUIRED (SET TO ACHIEVE 20 PSI RESIDUAL)		24	N/A	PSI

IRRIGATION CONTROLLER RUN TIMES

POC or Controller				JAN	FEB	MAR	APR	MAY	JUN	JUL	AUG	SEP	OCT	NOV	DEC	Total / Avg.
B	**ETo / Month (Inches):**			2.20	2.70	3.70	4.50	4.60	5.40	6.20	6.10	4.70	3.70	2.50	2.00	**48.30**
	ETo / Day (Inches):			0.07	0.10	0.12	0.15	0.15	0.18	0.20	0.20	0.16	0.12	0.08	0.06	**0.13**
	Irrigation Days / Week:			1	1	1	1	1	1	1	1	1	1	1	1	
Plant / Irrig. Type	**AKc**	**Pr Rate**	**IE**	**JAN**	**FEB**	**MAR**	**APR**	**MAY**	**JUN**	**JUL**	**AUG**	**SEP**	**OCT**	**NOV**	**DEC**	
Shrubs	0.20	0.72	0.81	10.2	13.9	17.2	21.6	21.4	25.9	28.8	28.3	22.6	17.2	12.0	9.3	Min./Day/Zone
Drip Tubing	**Number of Zones:**		19	**194.2**	**263.9**	**326.6**	**410.5**	**406.1**	**492.6**	**547.3**	**538.5**	**428.7**	**326.6**	**228.1**	**176.6**	**Total Min./Day**
Trees	0.40	3.00	0.75	5.3	7.2	8.9	11.2	11.1	13.4	14.9	14.7	11.7	8.9	6.2	4.8	Min./Day/Zone
Bubblers	**Number of Zones:**		7	**37.1**	**50.4**	**62.4**	**78.4**	**77.6**	**94.1**	**104.5**	**102.8**	**81.9**	**62.4**	**43.6**	**33.7**	**Total Min./Day**
Total Number of Zones:			**26**	231	314	389	489	484	587	652	641	511	389	272	210	Total Min./Day
Total Controller Run Time in Hours:				**3.86**	**5.24**	**6.48**	**8.15**	**8.06**	**9.78**	**10.86**	**10.69**	**8.51**	**6.48**	**4.53**	**3.50**	**Total Hrs./Day**
				JAN	**FEB**	**MAR**	**APR**	**MAY**	**JUN**	**JUL**	**AUG**	**SEP**	**OCT**	**NOV**	**DEC**	

Note: **These schedules are intended only for compliance with local municipal codes and the water efficient landscape ordinance. These calculations represent the MAXIMUM REASONABLE run times and are used to ensure that all irrigation may be completed during the specific watering window allowed. These schedules do not include rainfall, site soil types, specicic exposures (shade versus sun), actual irrigation days, or specific slope position. It is solely the responsibility of the irrigation contractor to program the controller as required to apply the correct amount of irrigation water for the landscape. All smart controllers shall be programmed using the specified ET or weather sensing equipment, satellite provided ET data, soil moisture sensors, and rain shut off devices as required. Contractor shall provide a controller schedule inside the controller cabinet prior to final turnover of the project to the owner.**

PIERRE LANDSCAPE
AS-BUILT DRAWING

NOTE A:
MAINLINE AND RELATED EQUIPMENT SHOWN WITHIN PAVING FOR CLARITY ONLY, ACTUAL MAINLINE AND RELATED EQUIPMENT LOCATION TO BE WITHIN PLANTERS AND A MINIMUM OF 18" OFF ADJACENT HARDSCAPE AND OTHER OBSTACLES TYP.

NOTE B:
CONTRACTOR SHALL ADJUST ALL HEADS AS REQUIRED TO ACCOMMODATE ANY VERTICAL OBSTRUCTIONS THAT MAY OCCUR, INCLUDING BUT NOT LIMITED TO LIGHT POLES, FIRE HYDRANTS, ETC. VERIFY ALL HEAD LAYOUT WITH OWNER'S AUTHORIZED REPRESENTATIVE PRIOR TO STARTING WORK.

NOTE C:
BUBBLERS AND LATERAL LINES ARE SHOWN WITHIN PAVING FOR CLARITY ONLY, ACTUAL LOCATION TO BE WITHIN PLANTER. BUBBLERS SHALL BE ALIGNED WITH TREES AND AS DIRECTED BY OWNER'S AUTHORIZED REPRESENTATIVE. CONFIRM ALL LAYOUT IN FIELD WITH OWNER'S AUTHORIZED REPRESENTATIVE PRIOR TO STARTING WORK.

NOTE D:
PLANTING LAYOUT TAKES PRIORITY OVER IRRIGATION EQUIPMENT LOCATIONS. DO NOT AFFECT HEDGE ROW; REFER TO PLANTING PLAN.

I HAVE COMPLIED WITH THE CRITERIA OF THE IRRIGATION GUIDELINES AND APPLIED THEM ACCORDINGLY FOR THE EFFICIENT USE OF WATER IN THE IRRIGATION DESIGN PLAN

sweeney + associates
IRRIGATION DESIGN AND CONSULTING
321 Rampart Street, Suite 209
Orange, Ca 92868
e: info@sweeneyassoc.com | t: (714) 938-0456
w: www.sweeneyassoc.com | f: (714) 938-0456

0' 10' 20' 40'
SCALE: 1" = 20'-0"
NORTH

architecture
westbergwhite
14471 CHAMBERS RD, SUITE 210
TUSTIN, CA 92780
(714) 508-1780 508-1790 FAX
1775 HANCOCK ST, SUITE 120
SAN DIEGO, CA 92110
(619) 542-1188 542-1663 FAX
719 S. McCLELLAND STREET
SANTA MARIA, CA 93454
(805) 346-2991 346-8790 FAX

CONSULTANT:
SWA
Laguna Beach
Dallas
Houston
Los Angeles
San Francisco
Sausalito
Shanghai
570 Glenneyre Street
Laguna Beach
CA 92651.2453
Fax 949.497.5471
Ph 949.497.7861
www.swagroup.com

PROJECT NAME:

Santa Ana College

Quad and Infrastructure Renovation

1530 West 17th Street
Santa Ana, California 92706

CLIENT:
Rancho Santiago Community College District
2323 North Broadway
Santa Ana, CA 92706

No.	Rev. Date	Description

JOB NO: WBWS401
DATE: 03/06/2015
DRAWN: SR
CHECK: SR/DG
ARCHITECT: PDW
ENGINEER:
ARCHITECT:

CONSULTANT:
REGISTERED LANDSCAPE ARCHITECT — DAVID J. BERKSON 335[illegible] — Signature — 1/12/16 — Date — STATE OF CALIFORNIA

STATE:
IDENTIFICATION STAMP
DIV. OF THE STATE ARCHITECT
OFFICE OF REGULATION SERVICES
APP NO: 04-113798
30-C2
AC ____ FLS ____ SS ____
DATE ____

SHEET DESCRIPTION:
IRRIGATION PLAN

SHEET NO:
L203

Bulletin 13.1

MATCHLINE L202

MATCHLINE L203

BLDG. L

BLDG. D

630'	A19	1"	6.3	40
TUBING	1	DRIP	0.72	753

PLACE VALVE BOXES A MINIMUM OF 24" FROM PAVING EDGE AND INSTALL AT LEAST 1 ROW OF SHRUBS BETWEEN PAVING AND VALVE BOXES. - TYPICAL; REFER TO DETAIL 'R', SHEET L206 AND NOTE 'F' BELOW RIGHT.

	B16	1"	12.0	30
	2	BUBB	3.00	N/A
2,610'	B17	1.5"	26.1	40
TUBING	1	DRIP	0.60	3,158

B13	1"	26.0	40	1,620'
1	DRIP	0.60	3,142	TUBING
B12	1"	10.0	30	
2	BUBB	3.00	N/A	
B11	1"	3.0	40	300'
1	DRIP	0.60	360	TUBING

LIMIT OF WORK ON THIS SHEET IS FOR LANDSCAPE /IRRIGATION SCOPE OF WORK. FOR FULL LIMIT OF WORK SEE ARCHITECTURE SHEETS.

IRRIGATION CONTROLLER 'L'; REFER TO NOTE "B"

EXISTING VALVE L-3 TO REMAIN. RE-CONNECT TO NEW CALSENSE CONTROLLER 'L'

1,610'	L19	1"	16.1	40
TUBING	1	DRIP	0.72	1,939
1,910'	L20	1.5"	19.1	40
TUBING	1	DRIP	0.72	2,302

A18	1"	22.0	30	
2	BUBB	3.00	N/A	
1,820'	A17	1.5"	18.2	40
TUBING	1	DRIP	0.72	2,197

STUB-UP 2" IRRIGATION MAINLINE AND WIRES FOR AMPHITHEATER IRRIGATION. CONTRACTOR SHALL RUN (2) ADDITIONAL WIRES AND (1) COMMON WIRE FROM PHASE A - CONTROLLER 'A' TO THIS APPROXIMATE LOCATION.

EXISTING TREE - TYPICAL: CONTRACTOR SHALL EXERCISE EXTREME CAUTION WHEN WORKING WITHIN THE DRIPLINE OF EXISTING TREES. NO MECHANICAL TRENCHING WITHIN THE DRIPLINE OF THE EXISTING TREE WILL BE ALLOWED; REFER TO EXISTING IRRIGATION NOTES ON SHEET L2.05

PLACE VALVE BOXES A MINIMUM OF 24" FROM PAVING EDGE AND INSTALL AT LEAST 1 ROW OF SHRUBS BETWEEN PAVING AND VALVE BOXES. - TYPICAL; REFER TO DETAIL 'R', SHEET L206 AND NOTE 'F' BELOW RIGHT.

RE-CONNECT TO EXISTING MAINLINE AND WIRES FOR CONTINUED USE OF (4) FOUR EXISTING PARKING LOT VALVES L-14, L-15, L-16 AND L-17

EXISTING VALVE L-4 TO REMAIN. RE-CONNECT TO NEW CALSENSE CONTROLLER 'L'

RE-CONNECT TO EXISTING MAINLINE FOR CONTINUED OPERATION OF EXISTING VALVES L-3 & L-4

IRRIGATION POINT OF CONNECTION #4; REFER TO NOTE "A"

AS-BUILT DRAWING

NOTE A:
POINT OF CONNECTION #4 SHALL BE A CONNECTION DOWNSTREAM OF THE EXISTING 2" BACKFLOW PREVENTION DEVICE. VERIFY THE ACTUAL LOCATION, SIZE AND WATER PRESSURE IN THE FIELD PRIOR TO STARTING WORK. IF ANY OF THE POC INFORMATION SHOWN ON THESE DRAWING IS FOUND TO BE DIFFERENT THAN THE ACTUAL POC INFORMATION GATHERED IN THE FIELD, IMMEDIATELY NOTIFY THE LANDSCAPE ARCHITECT AND IRRIGATION CONSULTANT. SHOULD THE CONTRACTOR FAIL TO VERIFY THE POC INFORMATION ANY CHANGES REQUIRED BY LOW PRESSURE OR VOLUME SHALL BE THE SOLE RESPONSIBILITY OF THE CONTRACTOR.

STATIC WATER PRESSURE	70 PSI
DESIGN WATER PRESSURE	39 PSI
MAXIMUM SYSTEM DEMAND	19 GPM
RESIDUAL WATER PRESSURE	31 PSI

NOTE B:
CONTROLLER 'L' SHALL BE REPLACED WITH A NEW CALSENSE 24 STATION CONTROLLER, INSTALLED IN A STAINLESS STEEL ENCLOSURE (SEE LEGEND FOR COMPLETE MODEL NUMBER AND TYPE). FINAL LOCATION OF CONTROLLER AND ELECTRICAL POC SHALL BE CONFIRMED WITH OWNER'S AUTHORIZED REPRESENTATIVE PRIOR TO STARTING WORK.

NOTE C:
MAINLINE AND RELATED EQUIPMENT SHOWN WITHIN PAVING FOR CLARITY ONLY, ACTUAL MAINLINE AND RELATED EQUIPMENT LOCATION TO BE WITHIN PLANTERS AND A MINIMUM OF 18" OFF ADJACENT HARDSCAPE AND OTHER OBSTACLES TYP.

NOTE D:
CONTRACTOR SHALL ADJUST ALL HEADS AS REQUIRED TO ACCOMMODATE ANY VERTICAL OBSTRUCTIONS THAT MAY OCCUR, INCLUDING BUT NOT LIMITED TO LIGHT POLES, FIRE HYDRANTS, ETC. VERIFY ALL HEAD LAYOUT WITH OWNER'S AUTHORIZED REPRESENTATIVE PRIOR TO STARTING WORK.

NOTE E:
BUBBLERS AND LATERAL LINES ARE SHOWN WITHIN PAVING FOR CLARITY ONLY, ACTUAL LOCATION TO BE WITHIN PLANTER. BUBBLERS SHALL BE ALIGNED WITH TREES AND AS DIRECTED BY OWNER'S AUTHORIZED REPRESENTATIVE. CONFIRM ALL LAYOUT IN FIELD WITH OWNER'S AUTHORIZED REPRESENTATIVE PRIOR TO STARTING WORK.

NOTE F:
PLANTING LAYOUT TAKES PRIORITY OVER IRRIGATION EQUIPMENT LOCATIONS. DO NOT AFFECT HEDGE ROW; REFER TO PLANTING PLAN.

I HAVE COMPLIED WITH THE CRITERIA OF THE IRRIGATION GUIDELINES AND APPLIED THEM ACCORDINGLY FOR THE EFFICIENT USE OF WATER IN THE IRRIGATION DESIGN PLAN

sweeney + associates
IRRIGATION DESIGN AND CONSULTING
321 Rampart Street, Suite 209
Orange, Ca 92868
e: info@sweeneyassoc.com | t: (714) 938-0456
w: www.sweeneyassoc.com | f: (714) 938-0456

0' 10' 20' 40'
SCALE: 1" = 20'-0"
NORTH

architecture
westbergwhite
14471 CHAMBERS RD, SUITE 210
TUSTIN, CA 92780
(714) 508-1780 508-1790 FAX
1775 HANCOCK ST, SUITE 120
SAN DIEGO, CA 92110
(619) 542-1188 542-1663 FAX
719 S. McCLELLAND STREET
SANTA MARIA, CA 93454
(805) 346-2991 346-8790 FAX

CONSULTANT:

SWA
Laguna Beach
Dallas
Houston
Los Angeles
San Francisco
Sausalito
Shanghai
570 Glenneyre Street
Laguna Beach
CA 92651.2453
Fax 949.497.5471
Ph 949.497.7861
www.swagroup.com

PROJECT NAME:

Santa Ana College
Quad and Infrastructure Renovation
1530 West 17th Street
Santa Ana, California 92706

CLIENT:
Rancho Santiago Community College District
2323 North Broadway
Santa Ana, CA 92706

No.	Rev. Date	Description

JOB NO:	WBWS401
DATE:	03/06/2015
DRAWN:	SR
CHECK:	SR/DG
ARCHITECT:	PDW
ENGINEER:	
ARCHITECT:	

CONSULTANT:

IRRIGATION LANDSCAPE AUDITOR CERTIFICATION 5084 STATE OF CALIFORNIA 1/12/16

STATE:

IDENTIFICATION STAMP
DIV. OF THE STATE ARCHITECT
OFFICE OF REGULATION SERVICES
APP NO: 04-113798
30-C2
AC _____ FLS _____ SS _____
DATE _____

SHEET DESCRIPTION:
IRRIGATION PLAN

SHEET NO:
L204

Bulletin 13.1

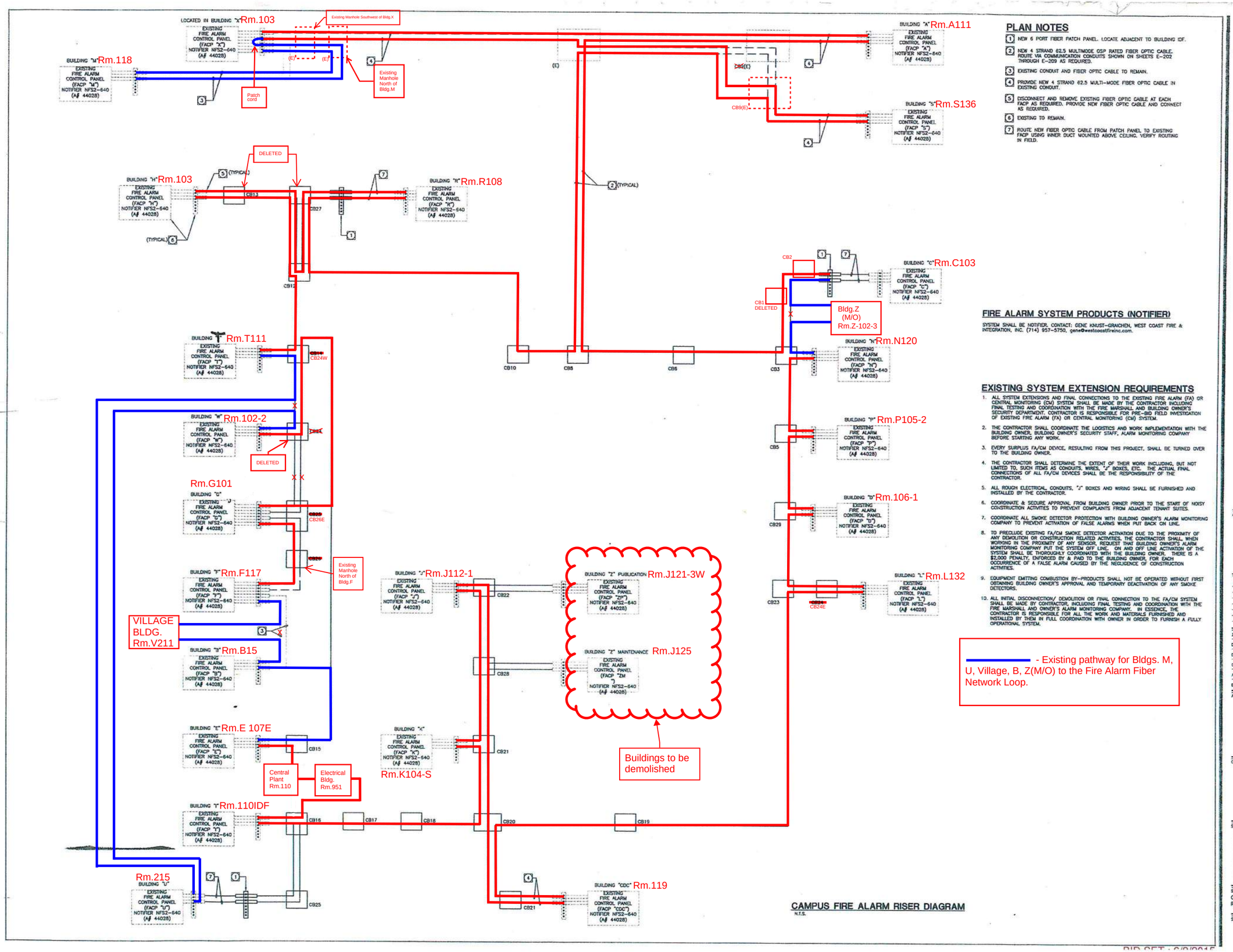

CAMPUS FIRE ALARM RISER DIAGRAM

N.T.S.

PLAN NOTES

1. NEW 6 PORT FIBER PATCH PANEL. LOCATE ADJACENT TO BUILDING IDF.
2. NEW 4 STRAND 62.5 MULTIMODE GSP RATED FIBER OPTIC CABLE. ROUTE VIA COMMUNICATION CONDUITS SHOWN ON SHEETS E-202 THROUGH E-209 AS REQUIRED.
3. EXISTING CONDUIT AND FIBER OPTIC CABLE TO REMAIN.
4. PROVIDE NEW 4 STRAND 62.5 MULTI-MODE FIBER OPTIC CABLE IN EXISTING CONDUIT.
5. DISCONNECT AND REMOVE EXISTING FIBER OPTIC CABLE AT EACH FACP AS REQUIRED. PROVIDE NEW FIBER OPTIC CABLE AND CONNECT AS REQUIRED.
6. EXISTING TO REMAIN.
7. ROUTE NEW FIBER OPTIC CABLE FROM PATCH PANEL TO EXISTING FACP USING INNER DUCT MOUNTED ABOVE CEILING. VERIFY ROUTING IN FIELD.

FIRE ALARM SYSTEM PRODUCTS (NOTIFIER)

SYSTEM SHALL BE NOTIFIER. CONTACT: GENE KNUST–GRANCHEN, WEST COAST FIRE & INTEGRATION, INC. (714) 957–5750, gene@westcoastfireinc.com.

EXISTING SYSTEM EXTENSION REQUIREMENTS

1. ALL SYSTEM EXTENSIONS AND FINAL CONNECTIONS TO THE EXISTING FIRE ALARM (FA) OR CENTRAL MONITORING (CM) SYSTEM SHALL BE MADE BY THE CONTRACTOR INCLUDING FINAL TESTING AND COORDINATION WITH THE FIRE MARSHALL AND BUILDING OWNER'S SECURITY DEPARTMENT. CONTRACTOR IS RESPONSIBLE FOR PRE–BID FIELD INVESTIGATION OF EXISTING FIRE ALARM (FA) OR CENTRAL MONITORING (CM) SYSTEM.
2. THE CONTRACTOR SHALL COORDINATE THE LOGISTICS AND WORK IMPLEMENTATION WITH THE BUILDING OWNER, BUILDING OWNER'S SECURITY STAFF, ALARM MONITORING COMPANY BEFORE STARTING ANY WORK.
3. EVERY SURPLUS FA/CM DEVICE, RESULTING FROM THIS PROJECT, SHALL BE TURNED OVER TO THE BUILDING OWNER.
4. THE CONTRACTOR SHALL DETERMINE THE EXTENT OF THEIR WORK INCLUDING, BUT NOT LIMITED TO, SUCH ITEMS AS CONDUITS, WIRES, "J" BOXES, ETC. THE ACTUAL FINAL CONNECTIONS OF ALL FA/CM DEVICES SHALL BE THE RESPONSIBILITY OF THE CONTRACTOR.
5. ALL ROUGH ELECTRICAL, CONDUITS, "J" BOXES AND WIRING SHALL BE FURNISHED AND INSTALLED BY THE CONTRACTOR.
6. COORDINATE & SECURE APPROVAL FROM BUILDING OWNER PRIOR TO THE START OF NOISY CONSTRUCTION ACTIVITIES TO PREVENT COMPLAINTS FROM ADJACENT TENANT SUITES.
7. COORDINATE ALL SMOKE DETECTOR PROTECTION WITH BUILDING OWNER'S ALARM MONITORING COMPANY TO PREVENT ACTIVATION OF FALSE ALARMS WHEN PUT BACK ON LINE.
8. TO PRECLUDE EXISTING FA/CM SMOKE DETECTOR ACTIVATION DUE TO THE PROXIMITY OF ANY DEMOLITION OR CONSTRUCTION RELATED ACTIVITIES, THE CONTRACTOR SHALL, WHEN WORKING IN THE PROXIMITY OF ANY SENSOR, REQUEST THAT BUILDING OWNER'S ALARM MONITORING COMPANY PUT THE SYSTEM OFF LINE. ON AND OFF LINE ACTIVATION OF THE SYSTEM SHALL BE THOROUGHLY COORDINATED WITH THE BUILDING OWNER. THERE IS A $2,000 PENALTY, ENFORCED BY & PAID TO THE BUILDING OWNER, FOR EACH OCCURRENCE OF A FALSE ALARM CAUSED BY THE NEGLIGENCE OF CONSTRUCTION ACTIVITIES.
9. EQUIPMENT EMITTING COMBUSTION BY–PRODUCTS SHALL NOT BE OPERATED WITHOUT FIRST OBTAINING BUILDING OWNER'S APPROVAL AND TEMPORARY DEACTIVATION OF ANY SMOKE DETECTORS.
10. ALL INITIAL DISCONNECTION/ DEMOLITION OR FINAL CONNECTION TO THE FA/CM SYSTEM SHALL BE MADE BY CONTRACTOR, INCLUDING FINAL TESTING AND COORDINATION WITH THE FIRE MARSHALL AND OWNER'S ALARM MONITORING COMPANY. IN ESSENCE, THE CONTRACTOR IS RESPONSIBLE FOR ALL THE WORK AND MATERIALS FURNISHED AND INSTALLED BY THEM IN FULL COORDINATION WITH OWNER IN ORDER TO FURNISH A FULLY OPERATIONAL SYSTEM.

——— - Existing pathway for Bldgs. M, U, Village, B, Z(M/O) to the Fire Alarm Fiber Network Loop.

architecture
westbergwhite
14471 CHAMBERS RD, SUITE 210
TUSTIN, CA 92780
(714) 508-1798 508-1799 FAX
1775 HANCOCK ST, SUITE 120
SAN DIEGO, CA 92110
(619) 542-1138 542-1143 FAX
719 S. McCLELLAND STREET
SANTA MARIA, CA 93454
(805) 346-2961 346-5790 FAX

CONSULTANT:
tkisc
COLLABORATIVE
15231 Laguna Canyon Road, Suite 100
Irvine, California 92618
949.751.8000 www.tkisc.com
Jony Leonhardt
tkisc Job #: 2015-0538

PROJECT NAME:

Santa Ana College
Quad and Infrastructure Renovation
1530 West 17th Street
Santa Ana, California 92706

CLIENT:
Rancho Santiago Community College District
2323 North Broadway
Santa Ana, CA 92706

Rev.	Date	Description

JOB NO: 13022.02
DATE: 03/06/2015
DRAWN: MM / BR / RB
CHECK: JG / MH
ARCHITECT: PDW
ENGINEER:
ARCHITECT:

CONSULTANT:

STATE:
IDENTIFICATION STAMP
DIV. OF THE STATE ARCHITECT
OFFICE OF REGULATION SERVICES
APP NO: 04-113798
FILE NO: 30-C2
AC ___ PLS 19 SS ___
DATE MAR 17 2015

SHEET DESCRIPTION:
CAMPUS FIRE ALARM RISER DIAGRAM

SHEET NO:
E-801

BID SET - 6/9/2015

Bldg H
Bldg R
Bldg S
Bldg M
Bldg X
Bldg A
Bldg C
Bldg. M/O
Bldg N
Bldg T
Bldg P
Bldg U
Bldg D
Bldg W
Bldg L
Bldg G
Bldg CDC
Bldg F
Bldg J Auto Shop
Village
Middle College High School
Bldg E
New Elect. Building
Central Plant
Bldg I
Bldg K

From Bldg.	To Building	Pathway Taken
X	M	X FACP, Rm.X103, Existing Manhole South of Bldg. X, Existing Manhole North of Bldg.M, Rm.M118, M FACP
M	S	M FACP, Rm.M118, Existing Manhole North of Bldg.M, Existing Manhole Northeast of Bldg. S, CB9, Rm.S131, S FACP
S	R	S FACP, Rm.S131, CB9, Existing Manhole Northeast of Bldg.S, CB8, CB10, CB12, Rm.R122-1, Rm.R108, R FACP
R	H	R FACP, Rm.R108, Rm.R122-1, CB12, Rm.H103, H FACP
H	T	H FACP, Rm.H103, CB12, CB24W, RmT111, T FACP
T	U	T FACP, Rm.T111, Rm.U215, U FACP
U	W	U FACP, Rm.U215, Rm.I110IDF, CB16, CB15, Rm.E107E, CB15, CB24W, CB26E, Rm.G101, CB26E, CB24W, Rm.W102-2, W FACP
W	G	W FACP, Rm.W102-2, CB24W, CB26E, Rm.G101, G FACP
G	F	G FACP, Rm.G101, CB26E, Existing Manhole North of Bldg.F, Rm.F117, F FACP
F	VILLAGE	F FACP, Rm.F117, Village Rm.V211, Village FACP
VILLAGE	MCHS B15	Village FACP, Village Rm.V211, Rm.F117, Rm.B15, B FACP
MCHS B15	E	B FACP, Rm.B15, Rm.F117, Existing Manhole North Bldg.F, CB26E, Rm.G101, CB24, CB24W, CB15, Rm.E107E, E FACP
E	New Elec. Bldg	E FACP in Rm. E107E, CB15, CB16, CB27, CB17, CB18, CB20, New Electric Building FACP in Rm.951
New Elec. Bldg	Central Plant	New Elec. Bldg FACP in RM. 951, CB20, CB18, Existing Manhole North of Central Plant, Central Plant FACP in Elec. Rm. 110
Central Plant	I	Central Plant FACP in Elect. Rm.110, Existing Manhole North of Central Plant, CB18, CB17, CB27, CB16, CB15, Bldg E Fiber Patchpanel in Rm. 107E, CB15, CB16, Existing Manhole East of Bldg I, Bldg I FACP in Rm.110IDF
I	K	I FACP, Rm.I110IDF, Existing Manhole East of Bldg.I, CB16, CB27, CB17, CB18, CB20, CB21, Rm.K104-S, (No FACP At Bldg.K)
K	J(Auto Shop)	Rm.K104-S, CB21, CB28, CB22, RmJ112-1, J Auto shop FACP in fenced off room on 1st floor.
J (Auto Shop)	CDC	J FACP in Auto Shop fenced off room on 1st flr, CB22, CB28, CB21, Bldg. K Fiber Patch Panel in Rm K104-S, CB21, CB20, Existing Manhole north of CDC perimiter wall, Existing Manhole north of CDC main office bldg., CDC FACP in Rm. 119
CDC	L	CDC FACP, Rm.CDC119, 2 Existing Manholes North of CDC Bldg., CB20, CB19, CB23, CB24E, Rm.L120, Rm.L207, Rm.L208, Rm.L132, L FACP
L	D	L FACP, Rm.L132, Rm.L208, Rm.L207, Rm.L120, CB24E, CB23, CB29, Rm.D106-1, D FACP
D	P	D FACP, Rm.D106-1, CB29, CB5, Rm.P105-2, P FACP
P	N	P FACP, Rm.P105-2, CB5, CB4, Rm.N120, N FACP
N	Z(M/O)	N FACP, Rm.N120, Rm.A119-2, Rm.Z-102-3 (Maint/Operations), Z(M/O) FACP
Z(M/O)	C	Z(M/O) FACP, Rm.Z-102-3 (Maint/Operations), Rm.A119-2, Rm.N120, CB4, CB5, CB3, CB2, Rm.C212, Rm.C103, C FACP
C	A	C FACP, Rm.C103, Rm.C212, CB2, CB3, CB6, CB8, Existing Manhole Northwest of Bldg.A, Existing Manhole North of Bldg.A, Rm.119-2, Rm.A111, A FACP
A	X	A FACP, Rm.A111, Rm.A11-2, Existing Manhole North of Bldg.A, Existing Manhole Northwest of Bldg.A, Existing Manhole South of Bldg.X, Rm.X103, X FACP

Attachment 3

PRE-BID CLARIFICATION ("PBC") FORM
(ALL questions to be submitted on this form ONLY)

PBC # *(RSCCD USE ONLY)*: 181

PROJECT NAME:	RFP #1819-224 Johnson Student Center at Santa Ana College		
PROJECT NUMBER:	3035	DSA NUMBER:	Demolition, #04-116810 INC 1 and INC 2
EMAIL:	**FacilitiesRFP@rsccd.edu**		

DATE:	09/26/2018		
FROM:	S.Monsen - McCarthy	EMAIL:	SMonsen@McCarthy.com
SPECIFICATION NUMBER:	281300	DRAWING NUMBER:	

REQUESTED CLARIFICATION:

Increment #2 - Per Specification section 281300-1.1 and 2.2, there is a discrepancy between who is to furnish the dual-credentialed key-fobs. Section 1.1 says they are to be provided by others while 2.2 states the contractor shall provide 2,500 credentials. Please clarify who is to provide the dual credentialed key-fobs.

If the contractor is to provide the key fobs, the information in section 281300 sect. 2.2 is inadequate to procure these devices as there are many variations and costs vary greatly especially if they are dual credential as noted in Section 1.1 above. Please provide more information so that the correct products can be provided.

RESPONSE TO CLARIFICATION, **SUBMITTED AS PART OF AN ADDENDUM**:

- Contractor shall provide the key-fob credential.
- Key-fob (Credential) technology to be coordinated with RSCCD.

RESPONSE PROVIDED BY:	T.J. Hicks - PlanNet Consulting	DATE:	10/15/2018

Attach additional numbered sheets as necessary; however, only one (1) request shall be contained on each submitted form.

Attachment 3

PRE-BID CLARIFICATION ("PBC") FORM
(ALL questions to be submitted on this form ONLY)

PBC # *(RSCCD USE ONLY)*:	182

PROJECT NAME:	RFP #1819-224 Johnson Student Center at Santa Ana College		
PROJECT NUMBER:	3035	DSA NUMBER:	Demolition, #04-116810 INC 1 and INC 2
EMAIL:	**FacilitiesRFP@rsccd.edu**		

DATE:	09/26/2018		
FROM:	S.Monsen - McCarthy	EMAIL:	SMonsen@McCarthy.com
SPECIFICATION NUMBER:		DRAWING NUMBER:	L2.20

REQUESTED CLARIFICATION:

Increment #2 - Sheet L2.20 Detail 3 - At the bottom, the new curb & hardscape layout does not show the existing CMU Monument Sign nor the Removable Stainless Steel Bollards. Confirm which of these are to be demolished or salvaged, noting that these are not called out to be removed nor protected on any of the Demolition sheets on any of the three sets of drawings. Also, if a new CMU Monument Sign and/or Removable Stainless Steel Bollards are required but in a different location, provide the location(s), quantity, and details for these. See attached photo.

RESPONSE TO CLARIFICATION, **SUBMITTED AS PART OF AN ADDENDUM**:

REFER TO REVISED SHEETS C1.0-D (INCREMENT 1) AND C2.0-D (INCREMENT 2)WITHIN ADDENDUM NO. 6 DATED 10/15/18

RESPONSE PROVIDED BY:	Julia D. Jones / hpi	DATE:	10/22/18

Attach additional numbered sheets as necessary; however, only one (1) request shall be contained on each submitted form.

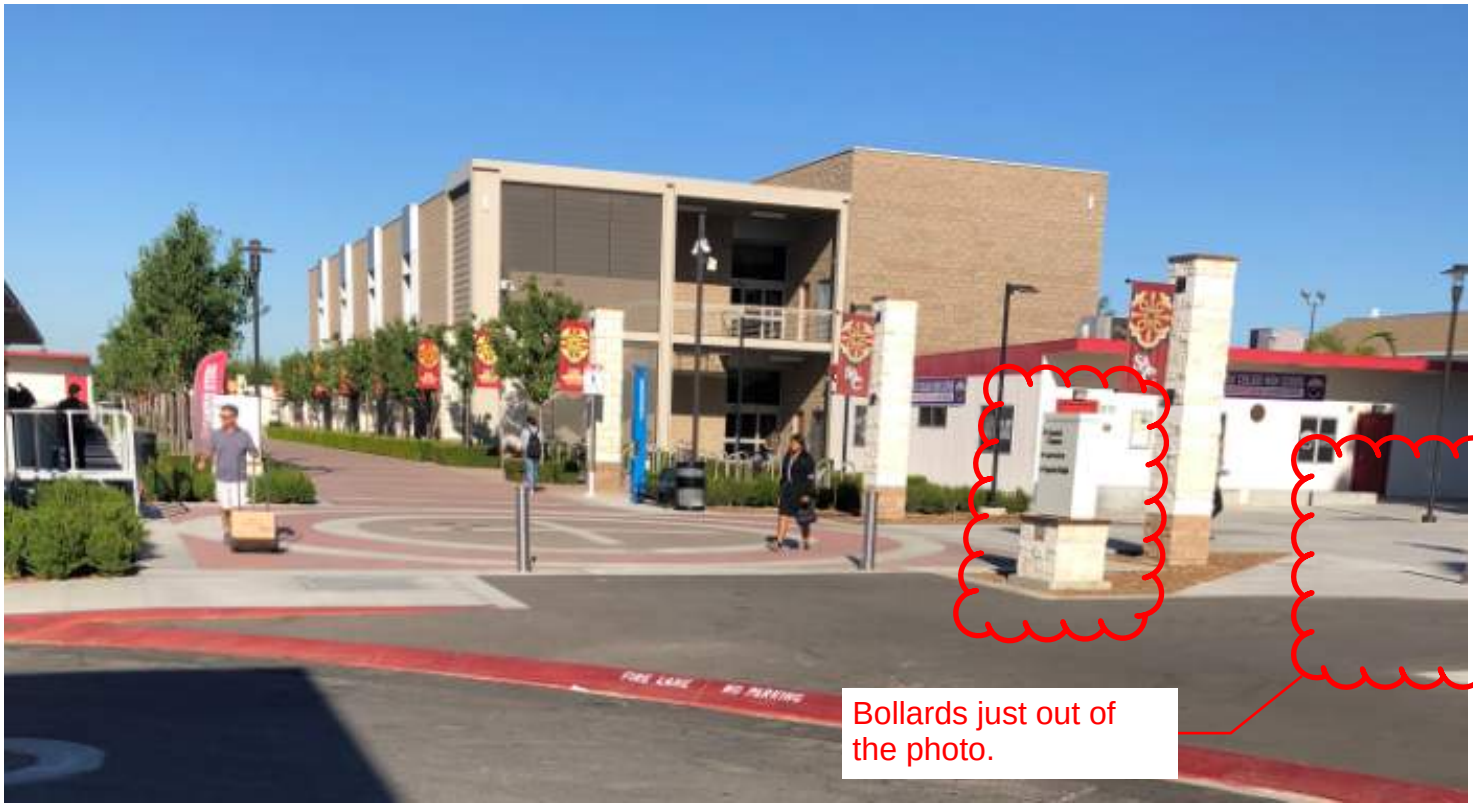
FIRE LANE
NO PARKING
Bollards just out of the photo.

Attachment 3

PRE-BID CLARIFICATION ("PBC") FORM
(ALL questions to be submitted on this form ONLY)

PBC # *(RSCCD USE ONLY)*: 183

PROJECT NAME:	RFP #1819-224 Johnson Student Center at Santa Ana College		
PROJECT NUMBER:	3035	DSA NUMBER:	Demolition, #04-116810 INC 1 and INC 2
EMAIL:	**FacilitiesRFP@rsccd.edu**		

DATE:	10/10/2018		
FROM:	S.Monsen - McCarthy	EMAIL:	SMonsen@McCarthy.com
SPECIFICATION NUMBER:		DRAWING NUMBER:	A8.31 & A9.11

REQUESTED CLARIFICATION:

Increment #2 - Sheet A8.31 Door schedule indicates that Door J200-3C (Type Z2) is a 60 min rated door. However Type Z2 on Sheet A8.30 calls it out as non-rated and details 4, 19 & 30 on A9.11 also indicate this door is non-rated. Please confirm that door J200-3C, type Z2 is a non-rated door.

RESPONSE TO CLARIFICATION, **SUBMITTED AS PART OF AN ADDENDUM**:

DOOR J200-3C IS RATED, STRIKE OUT THE LANGUAGE "NON" ON SHEET A8.300 AT DOOR TYPE Z2

RESPONSE PROVIDED BY:	Julia D. Jones / hpi	DATE:	10/22/18

Attach additional numbered sheets as necessary; however, only one (1) request shall be contained on each submitted form.

Attachment 3

PRE-BID CLARIFICATION ("PBC") FORM
(ALL questions to be submitted on this form ONLY)

PBC # *(RSCCD USE ONLY)*: 184

PROJECT NAME:	RFP #1819-224 Johnson Student Center at Santa Ana College		
PROJECT NUMBER:	3035	DSA NUMBER:	Demolition, #04-116810 INC 1 and INC 2
EMAIL:	**FacilitiesRFP@rsccd.edu**		

DATE:	10/11/2018		
FROM:	S.Monsen - McCarthy	EMAIL:	SMonsen@McCarthy.com
SPECIFICATION NUMBER:		DRAWING NUMBER:	A9.11

REQUESTED CLARIFICATION:

Increment #2 -
The Pocket Door at the Won Door (Z2) is called out to be 9'-6" (which will be made slightly smaller so it can open and close). As there are no elevations of this door, please provide the final height required for the Lumicor panel cladding (note the standard material comes in 8' and 10' high panels, which can be cut down).

Please also clarify if this Lumicor is RS-1 or RS-2.

RESPONSE TO CLARIFICATION, **SUBMITTED AS PART OF AN ADDENDUM**:

ELEVATION OF DOOR IS ON SHEET A8.30, THE DOOR HEIGHT IS 9'-6", REFER TO SHEET A9.11 FOR DETAILS OF WON-DOOR. PROVIDE RS-1

modifications of the Lumicor panel sizing may and will be required to fit.

RESPONSE PROVIDED BY:	Julia D. Jones / hpi	DATE:	10/15/18

Attach additional numbered sheets as necessary; however, only one (1) request shall be contained on each submitted form.

Attachment 3

PRE-BID CLARIFICATION ("PBC") FORM
(ALL questions to be submitted on this form ONLY)

PBC # *(RSCCD USE ONLY)*:	185

PROJECT NAME:	RFP #1819-224 Johnson Student Center at Santa Ana College		
PROJECT NUMBER:	3035	DSA NUMBER:	Demolition, #04-116810 INC 1 and INC 2
EMAIL:	**FacilitiesRFP@rsccd.edu**		

DATE:	10/11/2018		
FROM:	S.Monsen - McCarthy	EMAIL:	SMonsen@McCarthy.com
SPECIFICATION NUMBER:		DRAWING NUMBER:	

REQUESTED CLARIFICATION:

Increment #2 - Reference MCC RFI #172 - If the Won Don Pocket Door is determined to be non-rated, please confirm that all other Lumicor resin panels are not required to be rated.

RESPONSE TO CLARIFICATION, **SUBMITTED AS PART OF AN ADDENDUM**:

LUMICOR RESIN PANELS ARE NOT RATED

RESPONSE PROVIDED BY:	Julia D. Jones / hpi	DATE:	10/22/18

Attach additional numbered sheets as necessary; however, only one (1) request shall be contained on each submitted form.

Attachment 3

PRE-BID CLARIFICATION ("PBC") FORM
(ALL questions to be submitted on this form ONLY)

PBC # *(RSCCD USE ONLY)*: 186

PROJECT NAME:	RFP #1819-224 Johnson Student Center at Santa Ana College		
PROJECT NUMBER:	3035	DSA NUMBER:	Demolition, #04-116810 INC 1 and INC 2
EMAIL:	**FacilitiesRFP@rsccd.edu**		

DATE:	10/11/2018		
FROM:	S.Monsen - McCarthy	EMAIL:	SMonsen@McCarthy.com
SPECIFICATION NUMBER:	105613	DRAWING NUMBER:	

REQUESTED CLARIFICATION:

Increment #2 - Spec section 105613-2.1B & 2.4A specifies Hannibal Pallet Rack Plus, however paragraph 2.4A.9a&c mentions Penco products. Please confirm that Hannibal is correct and references to Penco should be removed.

RESPONSE TO CLARIFICATION, **SUBMITTED AS PART OF AN ADDENDUM**:

CONFIRMED BOTH SPEC 105613 PAR 2.4-A.9a & c ARE TO READ HANNIBAL.

PER G1.20, THE PALLET RACK SYSTEM IS A DEFERRED APPROVAL AND THE CONTRACTOR MUST SUBMIT STAMPED STRUCTURAL CALCULATIONS FROM A REGISTERED PROFESSIONAL ENGINEER LICENSED IN THE STATE OF CALIFORNIA.

RESPONSE PROVIDED BY:	Julia D. Jones / hpi	DATE:	10/22/18

Attach additional numbered sheets as necessary; however, only one (1) request shall be contained on each submitted form.

Attachment 3

PRE-BID CLARIFICATION ("PBC") FORM
(ALL questions to be submitted on this form ONLY)

PBC # *(RSCCD USE ONLY)*:	187

PROJECT NAME:	RFP #1819-224 Johnson Student Center at Santa Ana College		
PROJECT NUMBER:	3035	DSA NUMBER:	Demolition, #04-116810 INC 1 and INC 2
EMAIL:	**FacilitiesRFP@rsccd.edu**		

DATE:	10/11/2018		
FROM:	S.Monsen - McCarthy	EMAIL:	SMonsen@McCarthy.com
SPECIFICATION NUMBER:		DRAWING NUMBER:	A9.73 & S4.11

REQUESTED CLARIFICATION:

Increment #2 - Elevator #1 pit cannot be completely waterproofed per typical detail 25/A9.73, as this condition ties into a grade beam and footing per 8/S4.11. Please provide waterproofing details specific to elevator #1 pit.

RESPONSE TO CLARIFICATION, **SUBMITTED AS PART OF AN ADDENDUM**:

WATERPROOFING TO BE ONLY AT THE WEST AND NORTH/SOUTH WEST PIT WALLS. NOT NECESSARY TO WATERPROOF THE GRADE BEAM.

RESPONSE PROVIDED BY:	Julia D. Jones / hpi	DATE:	10/15/18

Attach additional numbered sheets as necessary; however, only one (1) request shall be contained on each submitted form.

Attachment 3

PRE-BID CLARIFICATION ("PBC") FORM
(ALL questions to be submitted on this form ONLY)

PBC # *(RSCCD USE ONLY)*: 188

PROJECT NAME:	RFP #1819-224 Johnson Student Center at Santa Ana College		
PROJECT NUMBER:	3035	DSA NUMBER:	Demolition, #04-116810 INC 1 and INC 2
EMAIL:	**FacilitiesRFP@rsccd.edu**		

DATE:	10/11/2018		
FROM:	S.Monsen - McCarthy	EMAIL:	SMonsen@McCarthy.com
SPECIFICATION NUMBER:		DRAWING NUMBER:	A3.10 & A8.21

REQUESTED CLARIFICATION:

Increment #2 - On sheet A3.10 there is a physical call out for Roller Shades on the North facade of The Spot J101 calling for window treatment (122413.A3 between A.3 and C), but the Roller Shade Window Treatment notes on sheet A8.21 specify that the North and East facing windows of The Spot J101 will not have roller shades. Please confirm window treatment locations for The Spot J101.

RESPONSE TO CLARIFICATION, **SUBMITTED AS PART OF AN ADDENDUM**:

REMOVED THE REFERENCE OF WINDOW SHADES AT THE NORTH IN THE SPOT J101. NOTE ON A8.21 IS CORRECT

RESPONSE PROVIDED BY:	Julia D. Jones / hpi	DATE:	10/22/18

Attach additional numbered sheets as necessary; however, only one (1) request shall be contained on each submitted form.

Attachment 3

PRE-BID CLARIFICATION ("PBC") FORM
(ALL questions to be submitted on this form ONLY)

PBC # *(RSCCD USE ONLY)*:	189

PROJECT NAME:	RFP #1819-224 Johnson Student Center at Santa Ana College		
PROJECT NUMBER:	3035	DSA NUMBER:	Demolition, #04-116810 INC 1 and INC 2
EMAIL:	**FacilitiesRFP@rsccd.edu**		

DATE:	10/11/2018		
FROM:	S.Monsen - McCarthy	EMAIL:	SMonsen@McCarthy.com
SPECIFICATION NUMBER:		DRAWING NUMBER:	A8.30 & A8.31

REQUESTED CLARIFICATION:

Increment #2 - On sheet A8.30 HM doors J108B, J128A, J128B, J129B, J130A, J132A & J133A and sheet A8.31 HM doorJ220B are called to have FF-PC (Factory Powder Coat) finish. The manufacturer specified (Steelcraft) does not offer powder coat due to oven temperatures . Should these openings match the rest of the project and be primed for finish paint by others?

RESPONSE TO CLARIFICATION, **SUBMITTED AS PART OF AN ADDENDUM**:

YES - PRIME FOR FINISH PAINT BY OTHERS. REVISE REFERENCE TO FF (ONLY) AT SAID DOORS.

RESPONSE PROVIDED BY:	Julia D. Jones / hpi	DATE:	10/22/18

Attach additional numbered sheets as necessary; however, only one (1) request shall be contained on each submitted form.

Attachment 3

PRE-BID CLARIFICATION ("PBC") FORM
(ALL questions to be submitted on this form ONLY)

PBC # *(RSCCD USE ONLY)*: 190

PROJECT NAME:	RFP #1819-224 Johnson Student Center at Santa Ana College		
PROJECT NUMBER:	3035	DSA NUMBER:	Demolition, #04-116810 INC 1 and INC 2
EMAIL:	**FacilitiesRFP@rsccd.edu**		

DATE:	10/11/2018		
FROM:	S.Monsen - McCarthy	EMAIL:	SMonsen@McCarthy.com
SPECIFICATION NUMBER:		DRAWING NUMBER:	

REQUESTED CLARIFICATION:

Increment #2 - Provide Temporary Shoring design documents and/or criteria that is required at a minimum along the east side of the building site due to the proximity of the deepened excavations for the pile cap & pile removal since this is a DSA approved project.

RESPONSE TO CLARIFICATION, **SUBMITTED AS PART OF AN ADDENDUM**:

THIS IS A MEANS AND METHOD EFFORT THE GC AND/OR SUB-CONTRACTOR WILL BE REQUIRED TO HIRE A STRUCTURAL ENGINEER TO DESIGN/ENGINEER SHORING FOR DEMO/REMOVAL OF DEEP CAPS/PILES.

RESPONSE PROVIDED BY:	Julia D. Jones / hpi	DATE:	10/22/18

Attach additional numbered sheets as necessary; however, only one (1) request shall be contained on each submitted form.

Attachment 3

PRE-BID CLARIFICATION ("PBC") FORM
(ALL questions to be submitted on this form ONLY)

PBC # *(RSCCD USE ONLY)*: 191 (RFC 142)

PROJECT NAME:	RFP #1819-224 Johnson Student Center at Santa Ana College		
PROJECT NUMBER:	3035	DSA NUMBER:	Demolition, #04-116810 INC 1 and INC 2
EMAIL:	**FacilitiesRFP@rsccd.edu**		

DATE:	10/02/2018		
FROM:	S.Monsen - McCarthy	EMAIL:	SMonsen@McCarthy.com
SPECIFICATION NUMBER:		DRAWING NUMBER:	A8.20, A2.21, A7.52

REQUESTED CLARIFICATION:

Increment #2 - Per Sheet A8.20, Rooms J200-1 thru J200-3 have a Comment calling for Vandal Resistant Corner Guards, however these are not identified on Detail 1/A2.21 nor Detail 1/A7.52. Confirm if any Corner Guards per Section 102600 par. 2.2-A are required, and if so provide the locations along with call outs & installation details.

RESPONSE TO CLARIFICATION, **SUBMITTED AS PART OF AN ADDENDUM**:

See attached plans with locations boxed in red. Corner Guards height for the majority will be +7' aff., sitting above the base. refer to markups for locations of taller/smaller height corner guards.

mechanically fasten the corner guards per attached.

RESPONSE PROVIDED BY:	Julia D. Jones / hpi	DATE:	10/22/18

Attach additional numbered sheets as necessary; however, only one (1) request shall be contained on each submitted form.

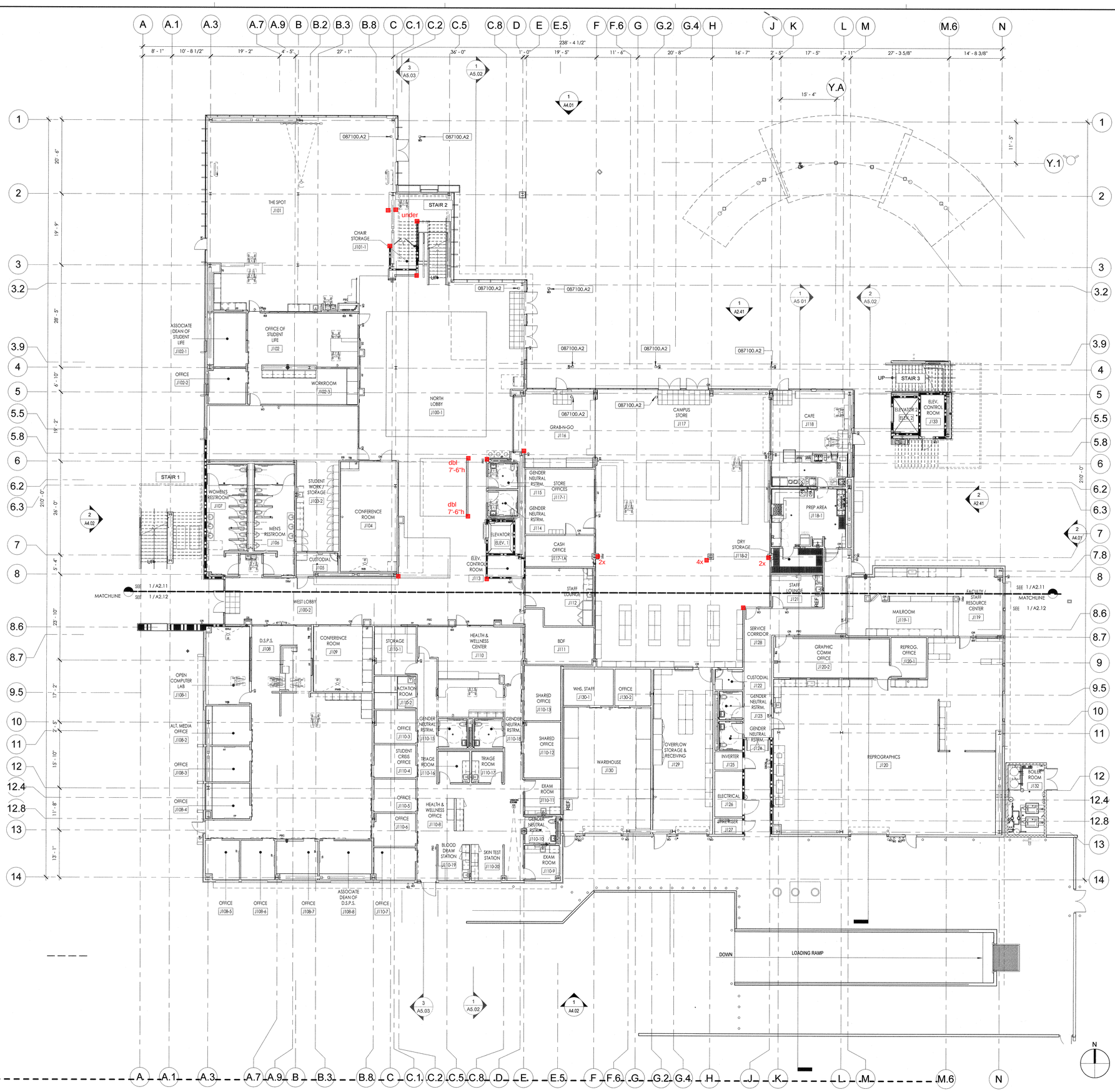

FIRST FLOOR - OVERALL PLAN SCALE 3/32" = 1'-0" 1

KEYNOTES

087100.A2	AUTOMATIC DOOR OPERATOR - BOLLARD, BASIS OF DESIGN: WIKK INDUSTRIES INC.- SEE DETAIL 5/G3.11

HPI architecture
www.hpiarchitecture.com
115 22nd street
Newport Beach, CA 92663
o: 949. 675. 6442

CONSULTANTS

SEALS / APPROVALS

IDENTIFICATION STAMP
DIV. OF THE STATE ARCHITECT
FILE: 30-C2
A# 04 - 116810
AC PB FLS PF SS TY
DATE AUG 31 2018

PROJECT TITLE
JOHNSON STUDENT CENTER
INCREMENT 2
1530 W 17TH ST SANTA ANA CA 92706

RANCHO SANTIAGO Community College District

SUBMITTALS

#	DATE	DESCRIPTION
	08/13/2018	DSA FINAL SUBMITTAL

PROJECT IDENTIFICATION Project Number

THESE DRAWINGS ORIGINALLY CREATED IN AUTODESK REVIT V. 2016 U.O.N.

THE ORIGINAL SIZE OF THIS SHEET IS 30' X 42'.

DRAWN BY MS, AMF

CHECKED BY LP

THESE DRAWINGS AND SPECIFICATIONS ARE THE PROPERTY AND COPYRIGHT OF THE ARCHITECT AND SHALL NOT BE USED ON ANY OTHER PROJECT OR LOCATIONS EXCEPT AS DESCRIBED ON THE DRAWINGS, WITHOUT WRITTEN AGREEMENT WITH THE ARCHITECT.

© HILL PARTNERSHIP INC. 2017

SHEET TITLE
FIRST FLOOR - OVERALL PLAN

SHEET NUMBER
A2.10

DSA SUBMITTAL

C:\Users\psamani\Documents\RSCCD_SAC_Johnson Center_Central_R16_psamani.rvt
8/9/2018 7:34:43 PM

8/9/2018 7:35:18 PM C:\Users\psipman\Documents\RSCCD_SAC_Johnson Center_Central_R16_psipman.rvt

SECOND FLOOR - OVERALL PLAN SCALE 3/32" = 1'-0" 1

HPI architecture
www.hpiarchitecture.com
115 22nd street
Newport Beach, CA 92663
o: 949. 675. 6442

CONSULTANTS

SEALS / APPROVALS

IDENTIFICATION STAMP
DIV. OF THE STATE ARCHITECT
FILE: 30-C2
A# 04 - 116810
AC PS FLS AF SS TJ
DATE AUG 31 2018

PROJECT TITLE
JOHNSON STUDENT CENTER
INCREMENT 2
1530 W 17TH ST SANTA ANA CA 92706

RANCHO SANTIAGO Community College District

SUBMITTALS		
#	DATE	DESCRIPTION
	08/13/2018	DSA FINAL SUBMITTAL

PROJECT IDENTIFICATION Project Number

THESE DRAWINGS ORIGINALLY CREATED IN AUTODESK REVIT V. 2016 U.O.N.

THE ORIGINAL SIZE OF THIS SHEET IS 30" X 42"

DRAWN BY MS, AMF

CHECKED BY LP

THESE DRAWINGS AND SPECIFICATIONS ARE THE PROPERTY AND COPYRIGHT OF THE ARCHITECT AND SHALL NOT BE USED ON ANY OTHER PROJECT OR LOCATIONS EXCEPT AS DESCRIBED ON THE DRAWINGS, WITHOUT WRITTEN AGREEMENT WITH THE ARCHITECT.

© HILL PARTNERSHIP INC. 2017

SHEET TITLE
SECOND FLOOR - OVERALL PLAN

SHEET NUMBER
A2.20

DSA SUBMITTAL

CORNER GUARD:

FINISH:_____

GAUGE:_____

TYPE:_____

CORNER GUARDS SUPPLIED IN STANDARD 16 GAUGE, TYPE #304 ALLOY WITH #4 SATIN FINISH.

OPTIONAL POWDER COAT FINISHES ARE AVAILABLE. PLEASE ADVISE OPTIONAL POWDER COAT FINISH IF REQUIRED.

OPTIONAL GAUGE (14,18, 20) AND ALLOY TYPES (#316, #430) AVAILABLE. PLEASE ADVISE OPTIONAL GAUGE AND ALLOY TYPE IF REQUIRED.

UNITS REQ'D	UNIT HEIGHT	ANGLE	LEG LENGTH	NOSE RAD.

NOTES:

1. CORNER GUARDS ARE SHIPPED WITH A PROTECTIVE STRIPPABLE COATING.
2. CO-8 CORNER GUARDS HAVE A STANDARD ANGLE OF 90°, LEG LENGTH OF 3 1/2" [89.0mm] AND A STANDARD NOSE RADIUS OF 3/16" [4.8mm]. CO-8M CORNER GUARDS HAVE A STANDARD ANGLE OF 135°, LEG LENGTH OF 3 1/2" [89.0mm] AND A STANDARD NOSE RADIUS OF 3/16" [4.8mm]. PLEASE ADVISE IF A DIFFERENT LEG LENGTH, ANGLE OR BULL NOSE RADIUS (AVAILABLE IN 1/2" [12.7mm] AND 3/4" [19.15mm] RADIUS) IS DESIRED.
3. CORNER GUARDS HAVE A MINIMUM LEG LENGTH OF 2" [50.8mm] AND MINIMUM NOSE RADIUS OF 3/16" [4.8mm].
4. ANGLES ONLY AVAILABLE BETWEEN 45° - 178°.
5. *CORNER GUARDS CAN BE USED AT FULL OR PARTIAL HEIGHTS. PLEASE ADVISE SPECIFIED UNIT HEIGHT OF CORNER GUARD.*

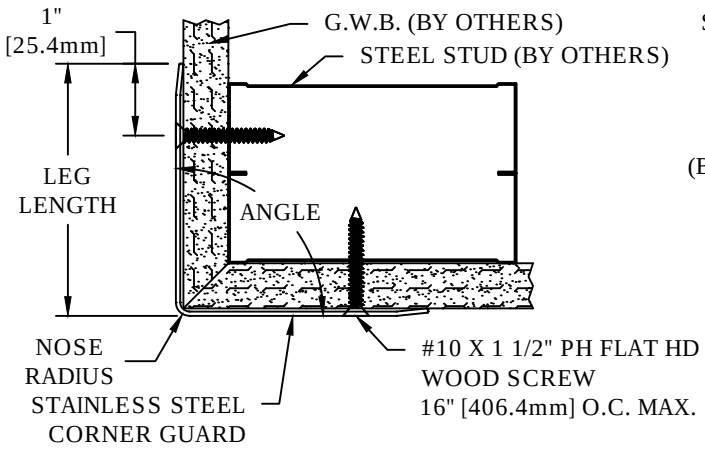

MODEL: CO-8

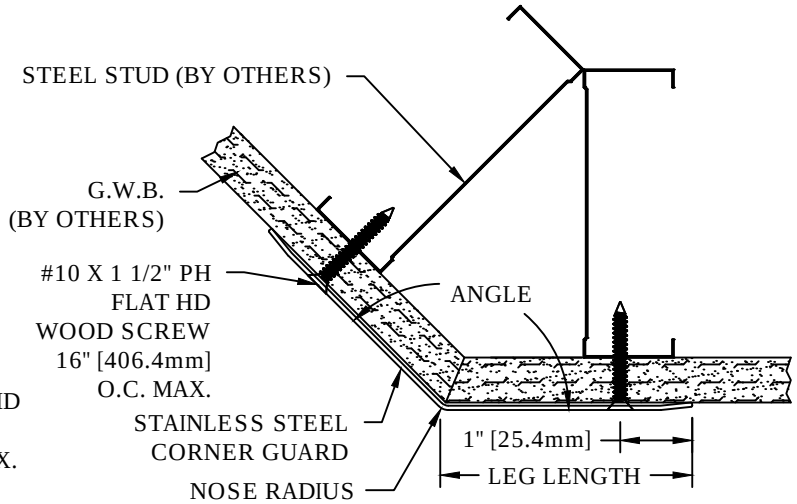

MODEL: CO-8M

CO-8 SERIES

CORNER GUARD

WITH FASTENERS

WALL CONDITION	SPECIFIED FASTENER	DRILL DIAMETERS		CS PART NUMBER
		WALL	RETAINER	
CONCRETE/CONCRETE BLOCK	#10 X 1 1/2" S/S PHILLIPS FLAT HEAD WOOD SCREW AF-8 PLASTIC ANCHORS	1/4"	N/A	90H009002 90H049004
STEEL STUD/GYPSUM WALL	#10 X 1 1/2" S/S PHILLIPS FLAT HEAD WOOD SCREW	1/8"	N/A	90H009002
WOOD STUD/GYPSUM WALL	#10 X 1 1/2" S/S PHILLIPS FLAT HEAD WOOD SCREW	N/A	N/A	90H009002

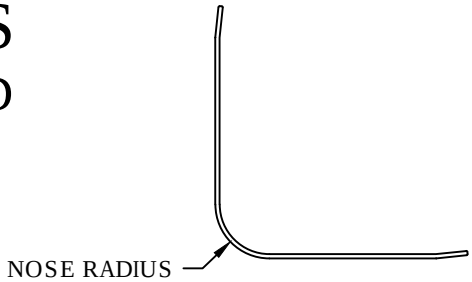

BULL NOSE RADIUS

CS Acrovyn

Hughesville, PA | 800.233.8493 | 570.546.5941
Mississauga, ON | 888.895.8955 | 905.274.3611
www.c-sgroup.com

© Copyright 2018 Construction Specialties, Inc.

PROJECT:	**REVISION:**
JOB NO.:	**F&F:**
CUSTOMER:	
REP:	**DATE:**
DRAWN BY:	**SHEET NO:**

Attachment 3

PRE-BID CLARIFICATION ("PBC") FORM
(ALL questions to be submitted on this form ONLY)

PBC # *(RSCCD USE ONLY)*:	192

PROJECT NAME:	RFP #1819-224 Johnson Student Center at Santa Ana College		
PROJECT NUMBER:	3035	DSA NUMBER:	Demolition, #04-116810 INC 1 and INC 2
EMAIL:	**FacilitiesRFP@rsccd.edu**		

DATE:	10/11/2018		
FROM:	S.Monsen - McCarthy	EMAIL:	SMonsen@McCarthy.com
SPECIFICATION NUMBER:	230900	DRAWING NUMBER:	

REQUESTED CLARIFICATION:

Increment #2 - Regarding specification 230900:

1) Does the Fault Detection Diagnostics (FDD) and Analytics need to be an expansion of the existing Skyspark system at Santa Ana College?

2) Does the Fault Detection Diagnostics (FDD) and Analytics need to be cloud hosted or locally hosted like the Skyspark system previously installed on campus?

RESPONSE TO CLARIFICATION, **SUBMITTED AS PART OF AN ADDENDUM**:

1)No it does not need to be an expansion of the existing Skyspark module and can be another standalone Fault Detection Diagnostics module tailored for the Johnson Student Center. 2)Fault Detection Diagnostics and Analytics should be locally hosted.

RESPONSE PROVIDED BY:	Joe Melendez / PM	DATE:	10/22/18

Attach additional numbered sheets as necessary; however, only one (1) request shall be contained on each submitted form.

Attachment 3

PRE-BID CLARIFICATION ("PBC") FORM
(ALL questions to be submitted on this form ONLY)

PBC # *(RSCCD USE ONLY)*:	193

PROJECT NAME:	RFP #1819-224 Johnson Student Center at Santa Ana College		
PROJECT NUMBER:	3035	DSA NUMBER:	Demolition, #04-116810 INC 1 and INC 2
EMAIL:	**FacilitiesRFP@rsccd.edu**		

DATE:	10/11/2018		
FROM:	S.Monsen - McCarthy	EMAIL:	SMonsen@McCarthy.com
SPECIFICATION NUMBER:		DRAWING NUMBER:	E0.03

REQUESTED CLARIFICATION:

Increment #2 - E0.03 list fixture type L10 with a description "Recessed linear LED fixture, length per plans", with pendant mounting. The part number also calls for a round pendant fixture. Please confirm the L10 fixture is to be a pendant fixture per fixture schedule, part number and mounting description.

RESPONSE TO CLARIFICATION, **SUBMITTED AS PART OF AN ADDENDUM**:

Light fixture shall be pendant mounted per part number and mounting description. Light fixture description updated. Refer to revised sheet E0.03 attached.

RESPONSE PROVIDED BY:	Melissa Klug / P2s	DATE:	10/22/18

Attach additional numbered sheets as necessary; however, only one (1) request shall be contained on each submitted form.

10/15/2018 5:07:28 PM C:\Revit Files\J7411_R16_MEPFA_Central_Melissa Jackson.rvt

LIGHT FIXTURE SCHEDULE

TYPE	DESCRIPTION	TOTAL V-A	LAMPS NO.	LAMPS V-A	LAMPS TYPE	VOLTAGE	MTG.	MANUFACTURER/REMARKS	MANUFACTURER ALTERNATES
INTERIOR FIXTURES									
A1	2' X 4' LED ARCHITECTURAL RECESSED FIXTURE	37	1	37	LED	U	R	COLUMBIA LIGHTING #LSTE-24-40-MW-G-MPO-ED1-U	LITHONIA LIGHTING OPTION 1: #LITH-2AVL4-40L-MDR-EZ1-LP840 OPTION 2: #LITH-2AVL4-40L-ADP-EZ1-LP840
A2	SAME AS TYPE A1 EXCEPT LOWER LUMEN OUTPUT	33	1	33	LED	U	R	COLUMBIA LIGHTING #LSTE-24-40-VW-G-MPO-ED1-U	LITHONIA LIGHTING OPTION 1: #LITH-2AVL4-30L-MDR-EZ1-LP840 OPTION 2: #LITH-2AVL4-30L-ADP-EZ1-LP840
A3	2' X 2' LED ARCHITECTURAL RECESSED FIXTURE	29	1	29	LED	U	R	COLUMBIA LIGHTING #LSTE-22-40-LW-G-MPO-ED1-U	
B	LED PANEL BACKLIGHTING	44	1	4W/FT	LED	277	S	LUMICOR LIGHTING #LUMILIGHT	-
C	8' CURVED LED PENDANT FIXTURE	32	1	32	LED	U	P	ALERA LIGHTING #LCV-4-40-LW-S-CM-96-0ED-U-MW-DC	PEERLESS LIGHTING OPTION 1: #7CRM7L-LLP-4FT-MSL4-80CRI-40K-I1200LMF-DARK-ZT-277-SCT-F1/96A-C210
K	LED LOW BAY	57	1	57	LED	U	P	HUBBEL #LBS-4K-WH19-LO-CD-XX-U	-
L1A	18" DIA. DECORATIVE LED PENDANT	42	1	39	LED	U	P	PRUDENTIAL LIGHTING #P4018-LED4-MO-FWA-YGW-D9-SC-UNV-X1-ECO-IBC	-
L1B	2' DIA. DECORATIVE LED PENDANT	59	1	67	LED	U	P	PRUDENTIAL LIGHTING #P4020-LED4-MO-FWA-YGW-D9-SC-UNV-X1-ECO-IBC	-
L1C	3' DIA. DECORATIVE LED PENDANT	95	1	113	LED	U	P	PRUDENTIAL LIGHTING #P4030-LED4-MO-FWA-YGW-D9-SC-UNV-X1-ECO-IBC	-
L3R	4' LED DIRECT RECESSED FIXTURE	16	1	3.9 W/FT	LED	U	R	LITECONTROL #3L-(MOUNTING PER ARCH)-D-4-SOF-(FINISH PER ARCH)-40K-D40-D10-1C-UNV	PINNACLE ARCHITECTURAL LIGHTING OPTION 1: #PNCL-E2A-40-840-4-G1-U-OL-1-0-W
L3S	4' LED DIRECT RECESSED FIXTURE	33	1	8.1 W/FT	LED	U	R	LITECONTROL #3L-(MOUNTING PER ARCH)-D-4-SOF-(FINISH PER ARCH)-40K-D80-D10-1C-UNV	PINNACLE ARCHITECTURAL LIGHTING OPTION 1: #PNCL-E2A-40-840HO-4-G1-U-OL-1-0-W
L3P	4' LED INDIRECT/DIRECT PENDANT FIXTURE	PER PLANS	1	9.9 W/FT	LED	U	P	LITECONTROL #3L-P-ID-STD-04-SOF-(FINISH PER ARCH)-40K-I030-D075-D10-1C-UNV-FA2 SEE NOTE #2	PINNACLE ARCHITECTURAL LIGHTING OPTION 1: #PNCL-EX2BA-O-840-840-4-AC1-U-OL-1-W-96"-AC-CABLE
L3W	4' LED DIRECT WALL MOUNT FIXTURE	33	1	8.1 W/FT	LED	U	W	LITECONTROL #3L-W-D-4-SOF-(FINISH PER ARCH)-40K-D80-D10-1C-UNV	-
L6	6" LED DOWNLIGHT	15	1	15	LED	U	R	LITEFRAME #LF6LEDG4-6LFLED5G4-40K-VR	ALPHABET LIGHTING OPTION 1: #ALPHABET-NU6-RD-XTM19-13LM-40K-S30-120-DIM10-NC-MC-MC
L7	6" LED ADJUSTABLE DOWNLIGHT	15	1	15	LED	U	R	LITEFRAME #LFA6LEDG4-6LFALED5G4-40K-WL45	ALPHABET LIGHTING OPTION 1: #ALPHABET-NU6-RA-XTM19-13LM-40K-S30-120-DIM10-NC-MC-MC
L8	RECESSED LINEAR LED FIXTURE, LENGTH PER PLANS.	40	1	40	LED	U	R	PRUDENTIAL LIGHTING #PS3-LED4-LO-4-YG2-SAL-D1-SC-UNV-X3B-DM01 SEE NOTE #2	PINNACLE ARCHITECTURAL LIGHTING OPTION 1: #PNCL-ET4-A-840-4-G1-U-OL1-1-W
L10	8" LED DECORATIVE PENDANT	26	1	28	LED	U	P	CONTECH LIGHTING #CGL8-30-35K-MVD2-XX	-
M	4' LINEAR LED PENDANT FIXTURE	96	1	96	LED	U	P	COLUMBIA LIGHTING #MPL-4-9-40-VL-AD-ED-U-FSC5 AIRCRAFT CABLE (LWSQM5)	LITHONIA LIGHTING OPTION 1: #LITH-IBG-15000LM-SEF-AFL-ND-MVOLT-OZ10-40K-90CRI-CS93W-DHW
P	4' LINEAR LED PENDANT FIXTURE, WET LISTED	36	1	36	LED	U	P	COLUMBIA LIGHTING #LXEM-4-40-LW-RA-ED-U	BEGHELLI LIGHTING OPTION 1: #BEGHELLI-BS101LED-4-HT-LO-WT40-120-277
Q	ENCLOSED AND GASKETED WALL SCONCE WITH TEMPERED GLASS. WET LISTED	18	1	18	FL	U	W	HUBBELL - INDUSTRIAL LIGHTING #NV2FG18BHG	LITHONIA LIGHTING OPTION 1: #LITH-OLVTWM
T1	LED TRACK LIGHTING	PER TRACK HEAD	1	23	LED	277	T	LIGHTING SERVICES INC. - LUMELEX #LX2044-T19-18-98-40-X-OE-277 #XX-ONE CKT-XXXX	JUNO LIGHTING OPTION 1: #JLTG-T383L-40K-90CRI-PDIM-NFL-BL OPTION 2: #JLTG-HTEK4-8FT-BL
T2	LED TRACK LIGHTING	PER TRACK HEAD	1	23	LED	277	T	LIGHTING SERVICES INC. - LUMELEX #LX2044-T19-18-98-40-X-5A-277 #XX-ONE CKT-XXXX	JUNO LIGHTING OPTION 1: #JLTG-T383L-HTEK-40K-90CRI-PDIM-NFL-BL
X	LED EXIT SIGN	2.5	1	2.5	LED	U	S	ISOLITE #ELT-AC-XX	LITHONIA LIGHTING OPTION 1: #LITH-LQM-S-3-R-120/277-EL-N-M6
EXTERIOR FIXTURES									
S1	EXTERIOR WALL MOUNT, EGRESS LIGHT	32.5	1	32.5	LED	U	W	DUAL-LITE GEO PACK #RDI1-4K-U-DB-E	LIGHTWAY LIGHTING OPTION 1: #LWAY-BDGW-7-U-21W-2-Z99-CEG
S2	EXTERIOR POST MOUNT, SITE LIGHT	57	1	57	LED	277	P	ARCHITECTURAL AREA # SP1-Y3-32LED-3K-550-COP-(TBD)-SCP-X	LIGMAN LIGHTING OPTION 1: #LIGMAN-FS-UEU-20286-2-55W-C-W30-XX POLE: #LIGMAN-APD-RSA-4012-14-4-0.125-XX
S3	EXTERIOR BOLLARD MOUNT, SITE LIGHT	15	1	15	LED	277	B	ARCHITECTURAL AREA # SPB-12LEDNW-COP-(TBD)-X	LIGMAN LIGHTING OPTION 1: #LIGMAN-FS-UEU-10016-20W-2-C-W40-XX
S4	EXTERIOR SURFACE MOUNT, TRELLIS LIGHT	25	1	25	LED	277	S	LUMINIS #SQ602-L2W12R1-277-(TBD)-SWK-X	-
S5	EXTERIOR SURFACE MOUNT WET LOCATION LOW LEVEL FLOODLIGHT	22	1	22	LED	277	S	ELP #222W1WLS	-
S6	EXTERIOR CANOPY RECESSED LINEAR LIGHT	42	1	42	LED	277	R	LITECONTROL #3L-R-D-4-X-X-REG-C4-D10-1C-UNV-S01	PINNACLE ARCHITECTURAL LIGHTING OPTION 1: #PNCL-EV3-R-840HO-4-U-OL1-1-S
S9	EXTERIOR STAND AND YOKE MOUNT STATUE LIGHT	27.6	1	27.6	LED	277	S	VISTA LIGHTING #1057-BR-X-40-B-MV-010-X	LIGMAN LIGHTING OPTION 1: #LIGMAN-UOD-5001-X-W40-120/277V-XX
S10	EXTERIOR CANOPY SURFACE MOUNT LINEAR LIGHT	4.9W/FT	1	4.9W/FT	LED	U	S	HUBBELL LIGHTING #3L-S-D-XX-SOF-XX-40K-D10-1C-UNV-1SD1/1SO1	
S11	EXTERIOR CEILING MOUNT WALL WASH LIGHT	15W/FT	1	15W/FT	LED	U	S	INSIGHT LIGHTING #MA-15-40K-ASY-D-CMS-72-INT2-XX-XX	

NOTES

1. VERIFY ALL FINISHES WITH OWNER.
2. VERIFY LENGTHS PER PLANS.

ABBREVIATIONS:

P = PENDANT
PO = POLE
R = RECESSED
S = SURFACE
RG = REGRESSED
T = TRACK
U = UNIVERSAL
W = WALL
B = BOLLARD
C = COVE
AC = ARCHITECTURAL COVE
AG = ABOVE GRADE
IG = IN GRADE

HPI architecture
www.hpiarchitecture.com
115 22nd street
Newport Beach, CA 92663
o: 949. 675. 6442

CONSULTANTS
P2S ENG
Long Beach | Los Angeles
San Diego San Jose
p2sinc.com

SEALS / APPROVALS

IDENTIFICATION STAMP
DIV. OF THE STATE ARCHITECT
FILE: 30-C2
A# 04-116810
AC _____ FLS _____ SS _____
DATE _____

PROJECT TITLE
JOHNSON STUDENT CENTER
INCREMENT 2
1530 W 17TH ST SANTA ANA CA 92706

RANCHO SANTIAGO Community College District

SUBMITTALS		
#	DATE	DESCRIPTION
	05/18/18	HEALTH DEPT. SUBMITTAL
	08/13/18	DSA FINAL SUBMITTAL
	09/24/18	ADDENDUM #3
	10/08/18	ADDENDUM #5
	10/15/18	ADDENDUM #6
	10/22/18	ADDENDUM #8

PROJECT IDENTIFICATION 7411

THESE DRAWINGS ORIGINALLY CREATED IN AUTODESK REVIT V. 2016

THE ORIGINAL SIZE OF THIS SHEET IS 30" X 42".

DRAWN BY C Naranjo

CHECKED BY C S Musser

THESE DRAWINGS AND SPECIFICATIONS ARE THE PROPERTY AND COPYRIGHT OF THE ARCHITECT AND SHALL NOT BE USED ON ANY OTHER HER PROJECT OR LOCATIONS EXCEPT AS DESCRIBED ON THE DRAWINGS, WITHOUT WRITTEN AGREEMENT WITH THE ARCHITECT.

© HILL PARTNERSHIP INC. 2015

SHEET TITLE
SCHEDULES

SHEET NUMBER
E0.03

100% CONSTRUCTION DOCUMENTS

Attachment 3

PRE-BID CLARIFICATION ("PBC") FORM
(ALL questions to be submitted on this form ONLY)

PBC # *(RSCCD USE ONLY)*: 194

PROJECT NAME:	RFP #1819-224 Johnson Student Center at Santa Ana College		
PROJECT NUMBER:	3035	DSA NUMBER:	Demolition, #04-116810 INC 1 and INC 2
EMAIL:	**FacilitiesRFP@rsccd.edu**		

DATE:	10/11/2018		
FROM:	S.Monsen - McCarthy	EMAIL:	SMonsen@McCarthy.com
SPECIFICATION NUMBER:		DRAWING NUMBER:	A8.50

REQUESTED CLARIFICATION: 19

Increment #2 - On sheet A8.50 interior window details 10,~~18~~,20, and 26 have no information or cut sections showing the framing system. Please clarify if these window frame systems are to be aluminum, knockdown, or frameless for coordination and pricing.

RESPONSE TO CLARIFICATION, **SUBMITTED AS PART OF AN ADDENDUM**:

WINDOWS IN-10, IN-19, IN-20 AND IN-26: ALUMINUM, REFER TO 17, 18 AND 19/A9.20 W/ ONE-WAY VISION GLASS.

RESPONSE PROVIDED BY:	Julia D. Jones / hpi	DATE:	10/22/18

Attach additional numbered sheets as necessary; however, only one (1) request shall be contained on each submitted form.

Attachment 3

PRE-BID CLARIFICATION ("PBC") FORM
(ALL questions to be submitted on this form ONLY)

PBC # *(RSCCD USE ONLY)*: 195

PROJECT NAME:	RFP #1819-224 Johnson Student Center at Santa Ana College		
PROJECT NUMBER:	3035	DSA NUMBER:	Demolition, #04-116810 INC 1 and INC 2
EMAIL:	**FacilitiesRFP@rsccd.edu**		

DATE:	10/11/2018		
FROM:	S.Monsen - McCarthy	EMAIL:	SMonsen@McCarthy.com
SPECIFICATION NUMBER:		DRAWING NUMBER:	A6.10

REQUESTED CLARIFICATION:

Increment #2 - On Detail 8 on A6.10 the northern edge of the stairs references Keynote 084113.A1 – Aluminum Storefront System. Detail 10 on A6.11 shows metal mesh. Please clarify Keynote 084113.A1 can be removed from detail 8/A6.10.

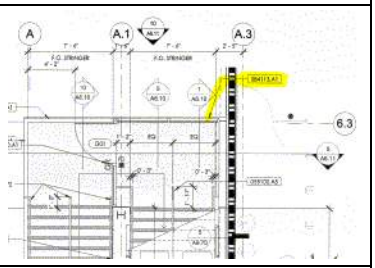

RESPONSE TO CLARIFICATION, **SUBMITTED AS PART OF AN ADDENDUM**:

REMOVE REFERENCE/KEYNOTE 084133.A1. THIS IS TO BE MATERIAL AND INSTALLED PER 12 AND 22/A9.71.

RESPONSE PROVIDED BY:	Julia D. Jones / hpi	DATE:	10/22/18

Attach additional numbered sheets as necessary; however, only one (1) request shall be contained on each submitted form.

Attachment 3

PRE-BID CLARIFICATION ("PBC") FORM
(ALL questions to be submitted on this form ONLY)

PBC # *(RSCCD USE ONLY)*:	196

PROJECT NAME:	RFP #1819-224 Johnson Student Center at Santa Ana College		
PROJECT NUMBER:	3035	DSA NUMBER:	Demolition, #04-116810 INC 1 and INC 2
EMAIL:	**FacilitiesRFP@rsccd.edu**		

DATE:	10/11/2018		
FROM:	S.Monsen - McCarthy	EMAIL:	SMonsen@McCarthy.com
SPECIFICATION NUMBER:		DRAWING NUMBER:	A9.23

REQUESTED CLARIFICATION:

Increment #2 - On Details 1 and 3 on A9.23 please clarify the finish material, that overhangs from the face of wall, between the drywall and backer rod and finish sealant at the interior window. (See attached)

RESPONSE TO CLARIFICATION, **SUBMITTED AS PART OF AN ADDENDUM**:

GRAPHICAL ERROR, IGNORE DARKENED LINE.

RESPONSE PROVIDED BY:	Julia D. Jones / hpi	DATE:	10/22/18

Attach additional numbered sheets as necessary; however, only one (1) request shall be contained on each submitted form.

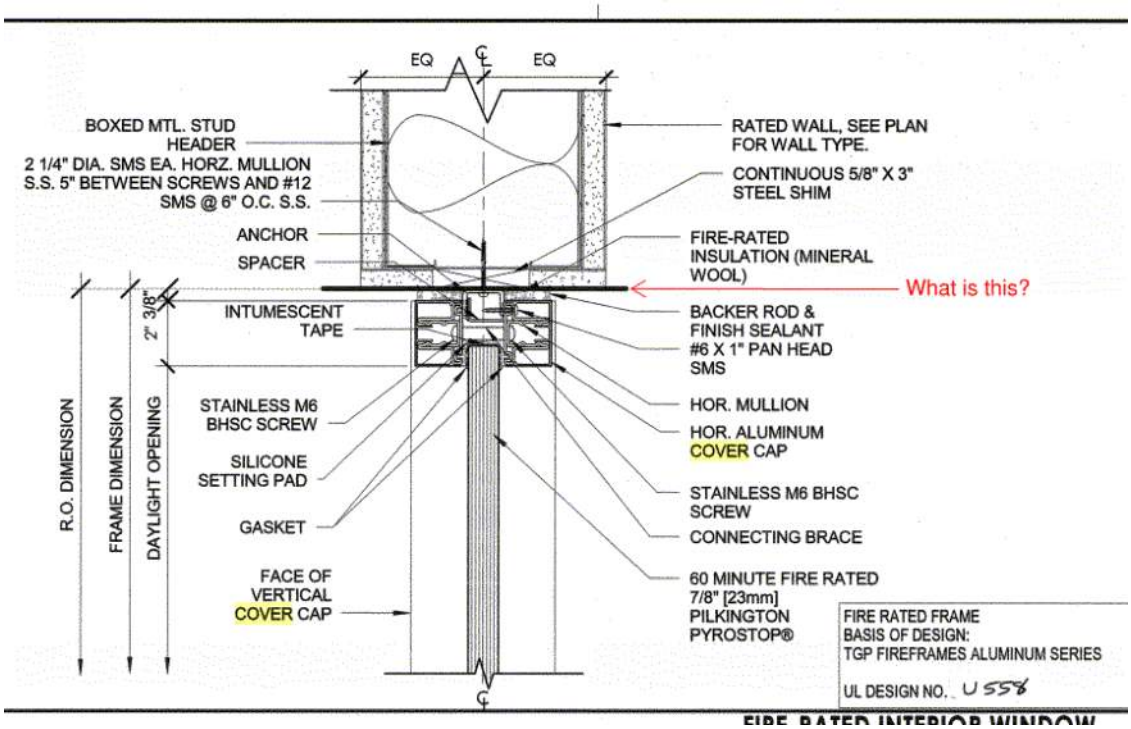

FIRE RATED INTERIOR WINDOW

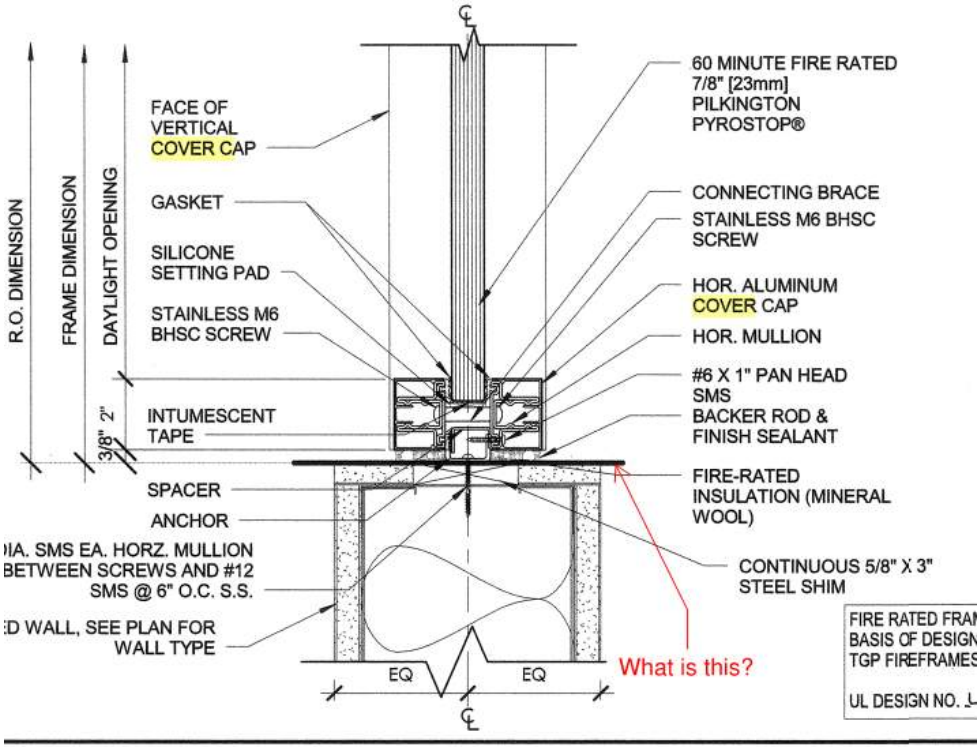

Attachment 3

PRE-BID CLARIFICATION ("PBC") FORM
(ALL questions to be submitted on this form ONLY)

PBC # *(RSCCD USE ONLY)*:	197

PROJECT NAME:	RFP #1819-224 Johnson Student Center at Santa Ana College		
PROJECT NUMBER:	3035	DSA NUMBER:	Demolition, #04-116810 INC 1 and INC 2
EMAIL:	**FacilitiesRFP@rsccd.edu**		

DATE:	10/11/2018		
FROM:	S.Monsen - McCarthy	EMAIL:	SMonsen@McCarthy.com
SPECIFICATION NUMBER:		DRAWING NUMBER:	CW2.01

REQUESTED CLARIFICATION:

Increment #2 - On Detail C1 on CW2.01 a reference is made for Detail 1 on CW6.12, which does not exist. Please provide the correct detail.

RESPONSE TO CLARIFICATION, **SUBMITTED AS PART OF AN ADDENDUM**:

DETAIL REFERENCE TO READ 1/CW6.09

RESPONSE PROVIDED BY:	Julia D. Jones / hpi	DATE:	10/22/18

Attach additional numbered sheets as necessary; however, only one (1) request shall be contained on each submitted form.

Attachment 3

PRE-BID CLARIFICATION ("PBC") FORM
(ALL questions to be submitted on this form ONLY)

PBC # *(RSCCD USE ONLY)*: 198

PROJECT NAME:	RFP #1819-224 Johnson Student Center at Santa Ana College		
PROJECT NUMBER:	3035	DSA NUMBER:	Demolition, #04-116810 INC 1 and INC 2
EMAIL:	**FacilitiesRFP@rsccd.edu**		

DATE:	10/11/2018		
FROM:	S.Monsen - McCarthy	EMAIL:	SMonsen@McCarthy.com
SPECIFICATION NUMBER:		DRAWING NUMBER:	G2.10 & FA2.12

REQUESTED CLARIFICATION:

Increment #2 - Sheet G2.10 - Signage Legend 14 cannot be found on the floor plan. Per FA2.12 the FACP is located in room J111. Please confirm that sign 14 should be located at this door.

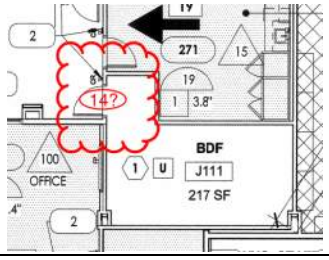

RESPONSE TO CLARIFICATION, **SUBMITTED AS PART OF AN ADDENDUM**:

CONFIRMED - PROVIDE SIGNAGE TYPE 14 ON EXTERIOR SIDE OF ROOM.

RESPONSE PROVIDED BY:	Julia D. Jones / hpi	DATE:	10/22/18

Attach additional numbered sheets as necessary; however, only one (1) request shall be contained on each submitted form.

Attachment 3

PRE-BID CLARIFICATION ("PBC") FORM
(ALL questions to be submitted on this form ONLY)

PBC # *(RSCCD USE ONLY)*: 199

PROJECT NAME:	RFP #1819-224 Johnson Student Center at Santa Ana College		
PROJECT NUMBER:	3035	DSA NUMBER:	Demolition, #04-116810 INC 1 and INC 2
EMAIL:	**FacilitiesRFP@rsccd.edu**		

DATE:	10/11/2018		
FROM:	S.Monsen - McCarthy	EMAIL:	SMonsen@McCarthy.com
SPECIFICATION NUMBER:		DRAWING NUMBER:	G3.12

REQUESTED CLARIFICATION:

Increment #2 - Per ADD #3 - Detail 19/G3.12 was added (24" Wide Monument), however if cannot be located on the plans (only a 16" Wide Monument can be found). Please review and confirm this detail does not apply to this project.

RESPONSE TO CLARIFICATION, **SUBMITTED AS PART OF AN ADDENDUM**:

CONFIRMED REMOVE DETAIL 19/GB.12 (ADDENDUM #3).

RESPONSE PROVIDED BY:	Julia D. Jones / hpi	DATE:	10/24/18

Attach additional numbered sheets as necessary; however, only one (1) request shall be contained on each submitted form.

Attachment 3

PRE-BID CLARIFICATION ("PBC") FORM
(ALL questions to be submitted on this form ONLY)

PBC # *(RSCCD USE ONLY)*: 200

PROJECT NAME:	RFP #1819-224 Johnson Student Center at Santa Ana College		
PROJECT NUMBER:	3035	DSA NUMBER:	Demolition, #04-116810 INC 1 and INC 2
EMAIL:	**FacilitiesRFP@rsccd.edu**		

DATE:	10/11/2018		
FROM:	S.Monsen - McCarthy	EMAIL:	SMonsen@McCarthy.com
SPECIFICATION NUMBER:	271000	DRAWING NUMBER:	

REQUESTED CLARIFICATION:

Increment #2 - Specification Section 271000

1 •Please confirm that the shop drawings for the structured cabling system must be produced by a registered RCDD as specified in Section 271000 Item 1.3-C.

2 •Please confirm the contractor is responsible to furnish & install CAT 6 patch cords for both ends (at equipment racks & at workstations)

RESPONSE TO CLARIFICATION, **SUBMITTED AS PART OF AN ADDENDUM**:

1. Confirmed.
2. Confirmed. Refer to Section 2.6 B.3

RESPONSE PROVIDED BY:	Carlo Monton	DATE:	10/16/2018

Attach additional numbered sheets as necessary; however, only one (1) request shall be contained on each submitted form.

Attachment 3

PRE-BID CLARIFICATION ("PBC") FORM
(ALL questions to be submitted on this form ONLY)

PBC # *(RSCCD USE ONLY)*: 201

PROJECT NAME:	RFP #1819-224 Johnson Student Center at Santa Ana College		
PROJECT NUMBER:	3035	DSA NUMBER:	Demolition, #04-116810 INC 1 and INC 2
EMAIL:	**FacilitiesRFP@rsccd.edu**		

DATE:	10/11/2018		
FROM:	S.Monsen - McCarthy	EMAIL:	SMonsen@McCarthy.com
SPECIFICATION NUMBER:	272000	DRAWING NUMBER:	

REQUESTED CLARIFICATION:

Increment #2 - Specification Section 272000

1 •Please confirm that wireless access points are contractor furnished, contractor installed.
2 •Please confirm that network switches are contractor furnished, contractor installed.
3 •Please confirm the port population requirements for the active network switches.

RESPONSE TO CLARIFICATION, **SUBMITTED AS PART OF AN ADDENDUM**:

1. Confirmed.
2. Confirmed.
3. Refer to 272000 Specs Section 3.5H states District ITS will perform all cable cross-connect and station patching tasks.

RESPONSE PROVIDED BY:	Carlo Monton	DATE:	10/12/2018

Attach additional numbered sheets as necessary; however, only one (1) request shall be contained on each submitted form.

Attachment 3

PRE-BID CLARIFICATION ("PBC") FORM
(ALL questions to be submitted on this form ONLY)

PBC # *(RSCCD USE ONLY)*:	202

PROJECT NAME:	RFP #1819-224 Johnson Student Center at Santa Ana College		
PROJECT NUMBER:	3035	DSA NUMBER:	Demolition, #04-116810 INC 1 and INC 2
EMAIL:	**FacilitiesRFP@rsccd.edu**		

DATE:	10/11/2018		
FROM:	S.Monsen - McCarthy	EMAIL:	SMonsen@McCarthy.com
SPECIFICATION NUMBER:		DRAWING NUMBER:	

REQUESTED CLARIFICATION:

Increment #2 - Reference PBC #12 (Add #3) - The original RFI requested details for the Tile so that it could be custom made, but details for how to install the tile were provided. Please provide details of the Custom Tile so that bidders can accurately price fabrication of this custom tile.

RESPONSE TO CLARIFICATION, **SUBMITTED AS PART OF AN ADDENDUM**:

REFER TO ATTACHED DETAILS 1 AND 2/SKA-202.1 AND COLORS (MALIBU CERAMIC WORKS) FOR THE DISTRICT STANDARD TILES.

RESPONSE PROVIDED BY:	Julia D. Jones / hpi	DATE:	10/22/18

Attach additional numbered sheets as necessary; however, only one (1) request shall be contained on each submitted form.

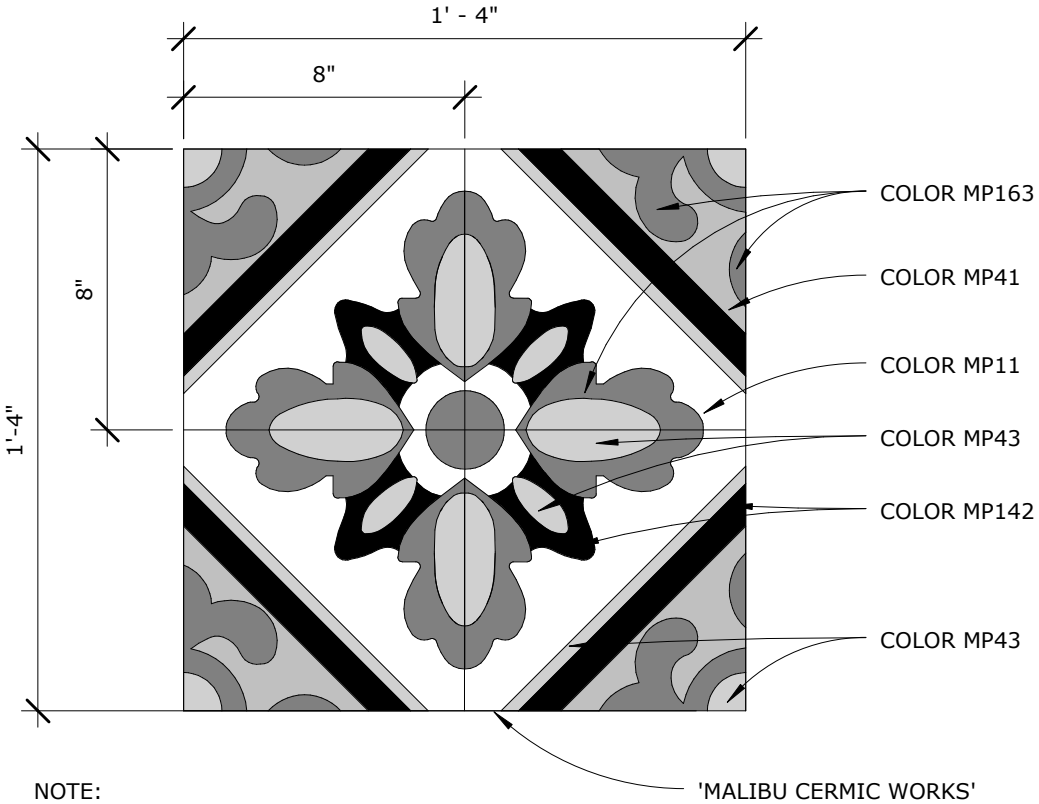

NOTE:
COLOR CALLOUT ARE REFERENCE 'MALIBU CERAMIC WORKS' COLOR SELECTIONS

16" CUSTOM TILE

N.T.S. 2

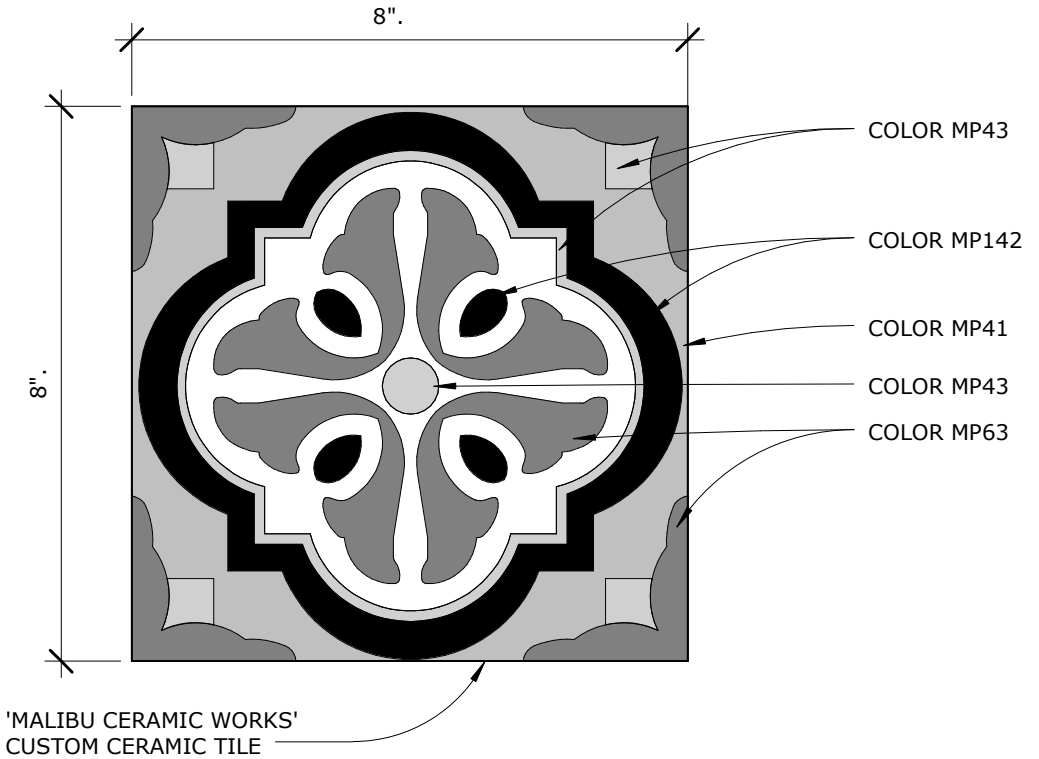

NOTE:
COLOR CALLOUT ARE REFERENCE 'MALIBU CERAMIC WORKS' COLOR SELECTIONS

8" CUSTOM TILE

N.T.S. 1

RFC 200
JOHNSON
STUDENT CENTER

SKA-202.01

MALIBU CERAMIC WORKS

MALIBU PALETTE

FOR MORE INFORMATION CONTACT US AT:
phone 310.455.2485 • fax 310.455.4385 • malibuceramicworks.com • © 2007 Malibu Ceramic Works

MCW Page 03.jpg

Attachment 3

PRE-BID CLARIFICATION ("PBC") FORM
(ALL questions to be submitted on this form ONLY)

PBC # *(RSCCD USE ONLY)*:	203

PROJECT NAME:	RFP #1819-224 Johnson Student Center at Santa Ana College		
PROJECT NUMBER:	3035	DSA NUMBER:	Demolition, #04-116810 INC 1 and INC 2
EMAIL:	**FacilitiesRFP@rsccd.edu**		

DATE:	09/26/2018		
FROM:	S.Monsen - McCarthy	EMAIL:	SMonsen@McCarthy.com
SPECIFICATION NUMBER:		DRAWING NUMBER:	A9.80

REQUESTED CLARIFICATION:

Increment #2 - Sheet A9.80 Detail 14 - The Skyfold Wall C calls for a Steel Channel Support and shows a threaded rod connection from the steel beam above to the Skyfold Hanger Assembly below. Provide the size of the channel, rods & all connection pieces and the spacing of the rods as no details are provided on the structural plans.

RESPONSE TO CLARIFICATION, **SUBMITTED AS PART OF AN ADDENDUM**:

REFER TO ATTACHED REVISED DETAILS 14 AND 19/A9.80.

RESPONSE PROVIDED BY:	Julia D. Jones / hpi	DATE:	10/22/18

Attach additional numbered sheets as necessary; however, only one (1) request shall be contained on each submitted form.

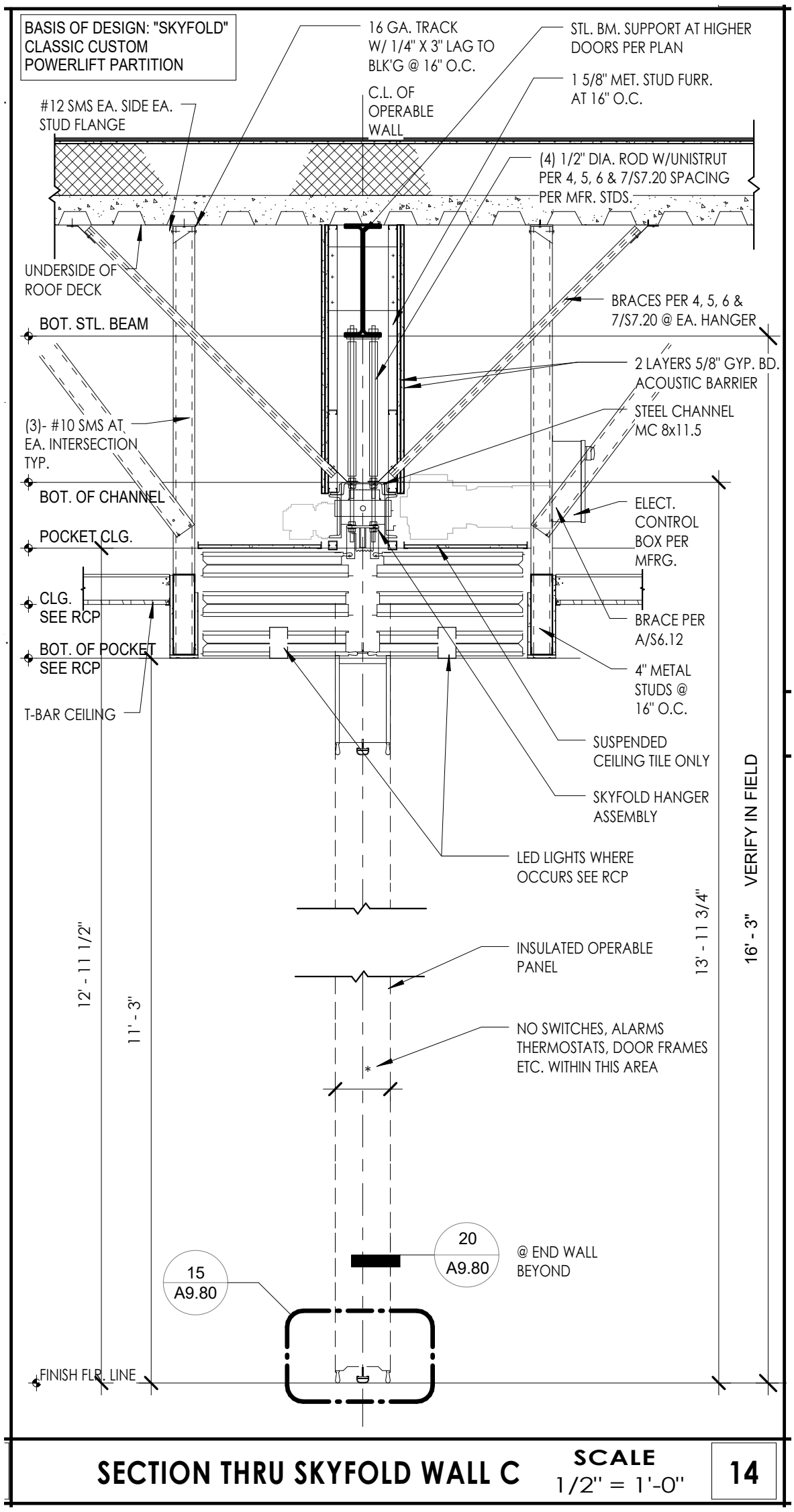

SECTION THRU SKYFOLD WALL C

SCALE 1/2" = 1'-0"

14

DETAIL14/A9.80

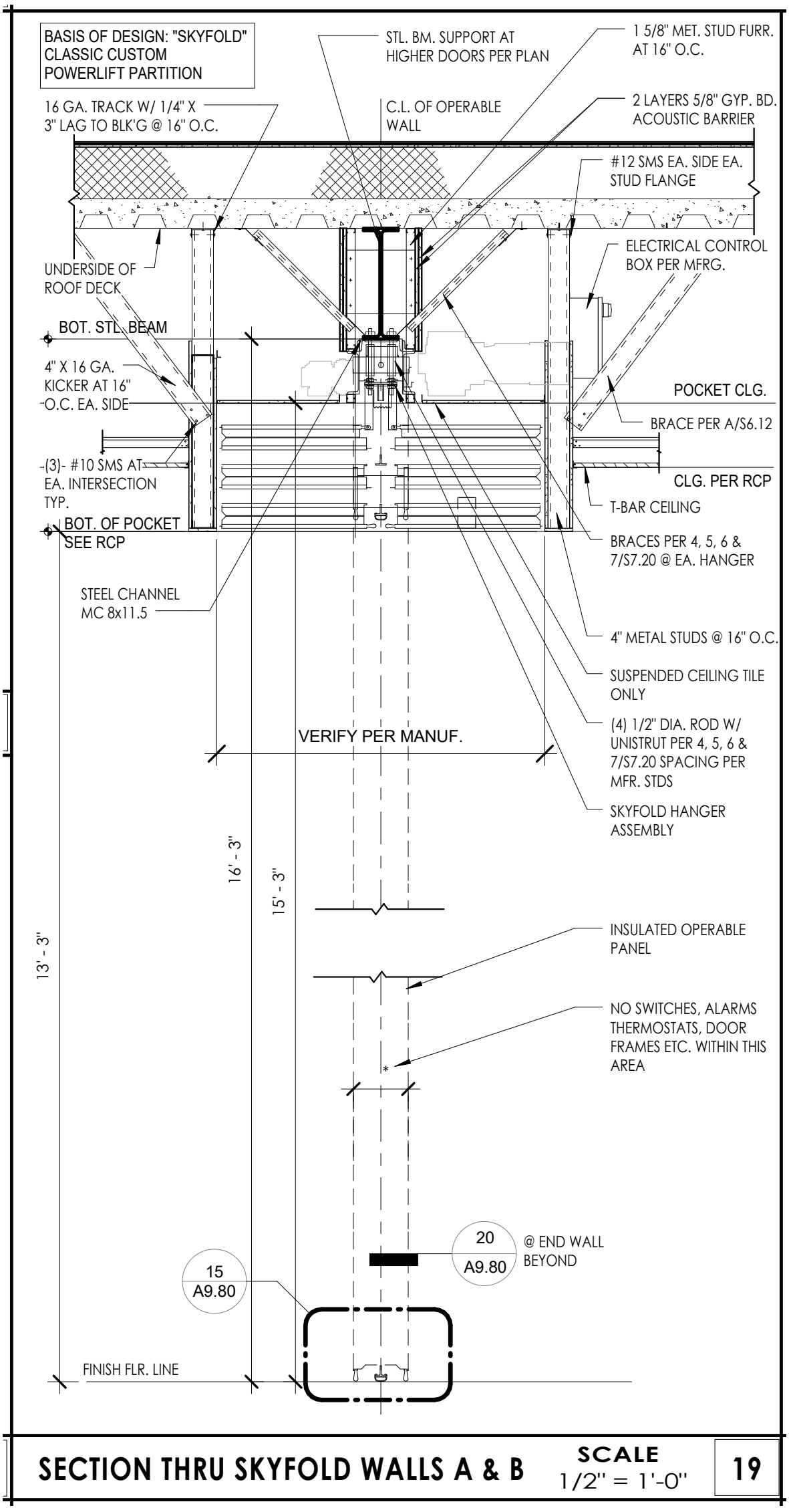

DETAIL19/A9.80

Attachment 3

PRE-BID CLARIFICATION ("PBC") FORM
(ALL questions to be submitted on this form ONLY)

PBC # *(RSCCD USE ONLY)*: 204

PROJECT NAME:	RFP #1819-224 Johnson Student Center at Santa Ana College		
PROJECT NUMBER:	3035	DSA NUMBER:	Demolition, #04-116810 INC 1 and INC 2
EMAIL:	**FacilitiesRFP@rsccd.edu**		

DATE:	10/09/2018		
FROM:	S.Monsen - McCarthy	EMAIL:	SMonsen@McCarthy.com
SPECIFICATION NUMBER:		DRAWING NUMBER:	LV1.21 & LV5.21

REQUESTED CLARIFICATION:

Increment #2 - LV1.21 calls out the "Ceiling Mount flat panel display" in the North Lobby J200-1 on 4/LV5.21 which indicates the Flat Panel Display to be 40", however spec section 274116 does not mention any displays of this size. Please clarify the correct dimensions or product information for this ceiling mounted flat panel display.

RESPONSE TO CLARIFICATION, **SUBMITTED AS PART OF AN ADDENDUM**:

See Exhibit B - Major AV Equipment List (attached separately) Display is the 43" Samsung PM43F w/ embedded digital signage player (or current equal); spec sheet attached

RESPONSE PROVIDED BY:	Jeremy Birch, CTS (PlanNet)	DATE:	10/11/18

Attach additional numbered sheets as necessary; however, only one (1) request shall be contained on each submitted form.

PMF Series Commercial LED LCD Displays

32.0"	PM32F	49.0"	PM49F
43.0"	PM43F	55.0"	PM55F

SAMSUNG

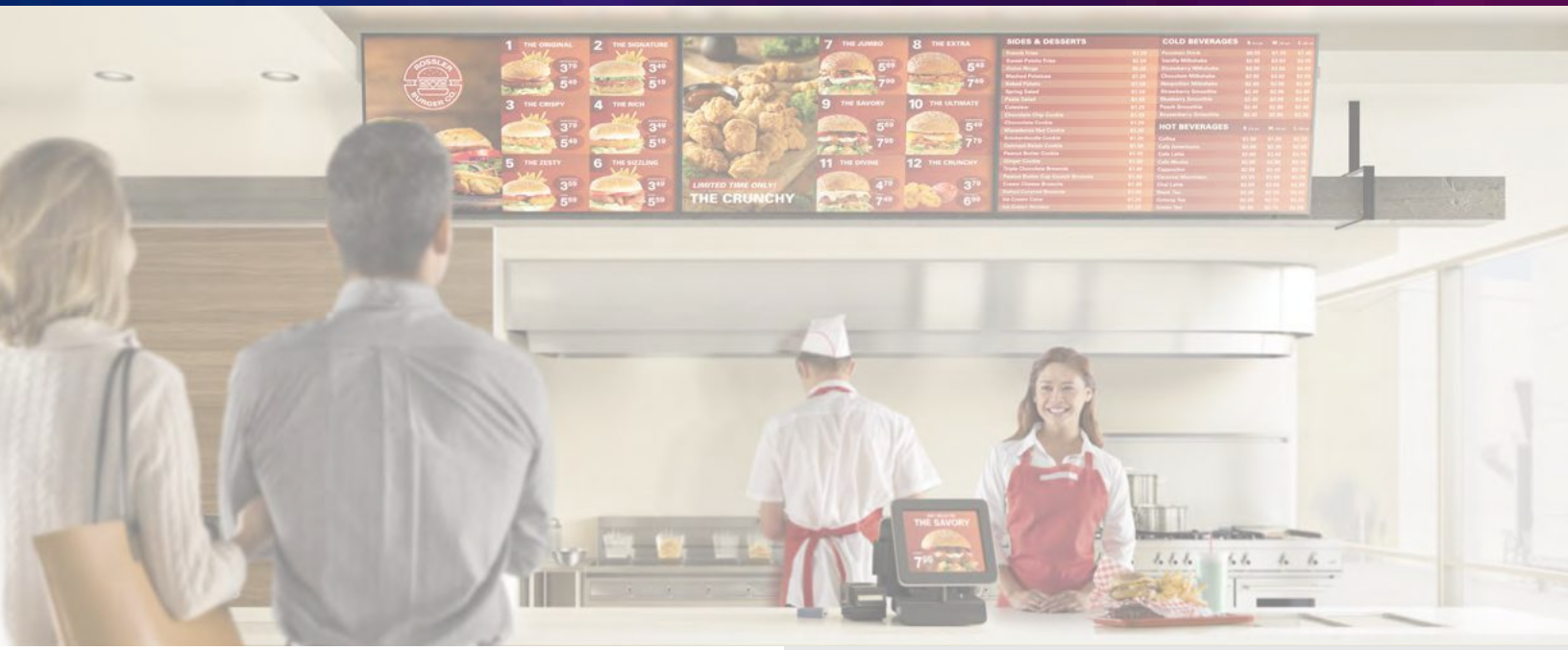

Digital signage that means business

PMF Series 32"/43"/49"/55" digital signage

Deliver your message at the highest level, even in less-than-ideal environments. Samsung PMF Series digital signage panels feature sharp, bright, exceptional images, with durability to match. These IP5X-rated displays are resistant to dust intrusion as well as airborne grease. Samsung PMF signage will deliver messages worry-free, 24/7 (PM32F is 16/7 runtime). And the non-glare screen ensures the head-turning images are always easily seen. They're the signage panels that can be counted on to deliver premium messaging, all day, every day.

Key features

24/7 runtime for reliable, continuous operation

Commercial-level cooling technologies offer dependable reliability. Samsung PMF Series panels are designed to deliver messages for extended periods of time, while also delivering peace of mind (PM32F is 16/7 runtime).

IP5X for lasting durability

PMF Series signage panels are rated IP5X dust-free for long-lasting, trouble-free operation without any additional housing.

Non-glare panel makes messages easier to see

Messages are easier to see with non-glare, anti-reflective panels that reduce reflection up to 44%. Text is legible, visuals have maximum impact.

Next gen SSP 4.0 powered by Tizen OS

The Samsung Smart Signage Platform 4.0 delivers a powerful, all-in-one solution. The PMF panel's internal CPU and high-performance video processor deliver an integrated media player platform, eliminating the need for an external set-back box or PC.

Enhanced web compatibility with available B2B developer SDK

Samsung B2B SDK allows developers to build web-based apps for customer functionality and greater interactivity.

Ultra-slim, ADA-compliant profile of just 1.1"

The Samsung PMF Series signage panels are just 1.1" thick, including the mount, and they're ADA-compliant.

Contact us
1-866-SAM4BIZ
samsung.com/business
samsung.com/b2bdigitalsignage

Follow us
youtube.com/samsungbizusa
@SamsungBizUSA

DIGITAL SIGNAGE DISPLAYS

INFORMATIONAL DISPLAYS

Samsung PMF series commercial LED LCD displays

			PM32F	PM43F	PM49F	PM55F
Panel	Diagonal Size		32"	43"	49"	55"
	Type		60Hz E-LED BLU	60Hz E-LED BLU	60Hz E-LED BLU	60Hz E-LED BLU
	Resolution		1920 x 1080 (16:9)	1920 x 1080 (16:9)	1920 x 1080 (16:9)	1920 x 1080 (16:9)
	Brightness (Typ.)		400 nits	500 nits	500 nits	500 nits
	Contrast Ratio (Typ.)		5000:1	5000:1	5000:1	5000:1
	Viewing Angle (H / V)		178:178	178:178	178:178	178:178
	Response Time (G-to-G)		8ms	8ms	8ms	8ms
	Orientation		Landscape / Portrait	Landscape / Portrait	Landscape / Portrait	Landscape / Portrait
	Operation Hours		16/7	24/7	24/7	24/7
	Anti Reflective		2%	44%	25%	25%
Sound	Speaker Type		Built in Speaker (10W + 10W)	Built in Speaker (10W + 10W)	Built in Speaker (10W + 10W)	Built in Speaker (10W + 10W)
Connectivity	Input	RGB	DVI-I (D-Sub Common), DisplayPort 1.2 (2)	DVI-I (D-Sub Common), DisplayPort 1.2 (2)	DVI-I (D-Sub Common), DisplayPort 1.2 (2)	DVI-I (D-Sub Common), DisplayPort 1.2 (2)
		Video	HDMI (2)	HDMI (2)	HDMI (2)	HDMI (2)
		Audio	Stereo Mini Jack	Stereo Mini Jack	Stereo Mini Jack	Stereo Mini Jack
		USB	USB 2.0 x 2	USB 2.0 x 2	USB 2.0 x 2	USB 2.0 x 2
	Output	Audio	Stereo Mini Jack	Stereo Mini Jack	Stereo Mini Jack	Stereo Mini Jack
	External Control		RS232C (In / Out) thru Stereo Jack, RJ45	RS232C (In / Out) thru Stereo Jack, RJ45	RS232C (In / Out) thru Stereo Jack, RJ45	RS232C (In / Out) thru Stereo Jack, RJ45
Power	Type		Internal	Internal	Internal	Internal
	Power Supply		AC 100 - 240 V~ (+/- 10 %), 50/60 Hz	AC 100 - 240 V~ (+/- 10 %), 50/60 Hz	AC 100 - 240 V~ (+/- 10 %), 50/60 Hz	AC 100 - 240 V~ (+/- 10 %), 50/60 Hz
	Power Consumption	Max [W / H]	88	154	165	187
		Typical [W / H]	42	66	47	55
		Sleep Mode	Less than 0.5W	Less than 0.5W	Less than 0.5W	Less than 0.5W
		Off Mode	Less than 0.5W	Less than 0.5W	Less than 0.5W	Less than 0.5W
Dimensions	Set (WxHxD)		28.3" x 16.3" x 1.1"	37.7" x 21.6" x 1.1"	43" x 24.5" x 1.1"	48.3" x 27.6" x 1.1"
	Package (WxHxD)		31.3" x 19" x 5.1"	40" x 24" x 5.1"	47" x 28.3" x 6.5"	52.5" x 31.9" x 7.1"
	Bezel Width (mm)		8.9 (Top / Side), 8.9 (Bottom)	6.9 (Top / Side), 8.9 (Bottom)	6.9 (Top / Side), 8.9 (Bottom)	6.9 (Top / Side), 8.9 (Bottom)
Weight	Set		12.5 lbs.	20.7 lbs.	28.1 lbs.	35.9
	Package		15.4 lbs.	25 lbs.	39.9 lbs.	48 lbs.
Features	VESA Mount		200 x 200mm	200 x 200mm	400 x 400mm	400 x 400mm
	Stand Type		Foot Stand (Optional)	Foot Stand (Optional)	Foot Stand (Optional)	Foot Stand (Optional)
	Special	Hardware	Temperature Sensor, Videowall (15 x 15 [OSD]), Videowall Daisy Chain (16), Pivot Display, Clock Battery (80 hrs. Clock Keeping), Built in Speaker (10W x 2), Wi-Fi Module Embedded, Tuner (only for NA), IP5X, Center IR	Non Glare Panel, Temperature Sensor, Videowall (15 x 15 [OSD]), Videowall Daisy Chain (16), Pivot Display, Clock Battery (80 hrs. Clock Keeping), Built in Speaker (10W x 2), Wi-Fi Module Embedded, Tuner (only for NA), IP5X, Center IR	Non Glare Panel, Temperature Sensor, Videowall (15 x 15 [OSD]), Videowall Daisy Chain (16), Pivot Display, Clock Battery (80 hrs. Clock Keeping), Built in Speaker (10W x 2), Wi-Fi Module Embedded, Tuner (only for NA), IP5X, Center IR	Non Glare Panel, Temperature Sensor, Videowall (15 x 15 [OSD]), Videowall Daisy Chain (16), Pivot Display, Clock Battery (80 hrs. Clock Keeping), Built in Speaker (10W x 2), Wi-Fi Module Embedded, Tuner (only for NA), IP5X, Center IR
		Software	Magic Clone (to USB), Auto Source Switching & Recovery, RS232C/RJ45 MDC, Plug and Play, PIP/PBP, Image Rotation, Button Lock, DP 1.2 Digital Daisy Chain (HDCP Support), Firmware Update by Network, New Home Screen, PC-less Videowall, Multi Channel, Mobile Control, Event Schedule, Backup Player	Magic Clone (to USB), Auto Source Switching & Recovery, RS232C/RJ45 MDC, Plug and Play, PIP/PBP, Image Rotation, Button Lock, DP 1.2 Digital Daisy Chain (HDCP Support), Firmware Update by Network, New Home Screen, PC-less Videowall, Multi Channel, Mobile Control, Event Schedule, Backup Player	Magic Clone (to USB), Auto Source Switching & Recovery, RS232C/RJ45 MDC, Plug and Play, PIP/PBP, Image Rotation, Button Lock, DP 1.2 Digital Daisy Chain (HDCP Support), Firmware Update by Network, New Home Screen, PC-less Videowall, Multi Channel, Mobile Control, Event Schedule, Backup Player	Magic Clone (to USB), Auto Source Switching & Recovery, RS232C/RJ45 MDC, Plug and Play, PIP/PBP, Image Rotation, Button Lock, DP 1.2 Digital Daisy Chain (HDCP Support), Firmware Update by Network, New Home Screen, PC-less Videowall, Multi Channel, Mobile Control, Event Schedule, Backup Player
	Tuner		Yes	Yes	Yes	Yes
	Internal Media Player		Cortex-A12 1.3GHz Quad Core, 2.5GB DDR3, 8GB FDM, USB 2.0, Tizen 2.4 (VDLinux)	Cortex-A12 1.3GHz Quad Core, 2.5GB DDR3, 8GB FDM, USB 2.0, Tizen 2.4 (VDLinux)	Cortex-A12 1.3GHz Quad Core, 2.5GB DDR3, 8GB FDM, USB 2.0, Tizen 2.4 (VDLinux)	Cortex-A12 1.3GHz Quad Core, 2.5GB DDR3, 8GB FDM, USB 2.0, Tizen 2.4 (VDLinux)
Environmental Conditions	Operating Temperature		0ºC ~ 40ºC	0ºC ~ 40ºC	0ºC ~ 40ºC	0ºC ~ 40ºC
	Operating Humidity		10 ~ 80%	10 ~ 80%	10 ~ 80%	10 ~ 80%
Accessories	Included		Quick Setup Guide, Regulatory Guide, Warranty Card, Power Cord, Remote Controller, Batteries, RS232C(IN) Adapter, Cover Jack			
	Optional	Stand	STN-L3240E	STN-L3240E	STN-L4655E	STN-L4655E
		Mount	WMN4070SD	WMN4070SD	WMN4270SD	WMN4270SD
		Media Player	SBB-DA / SBB-DI (Not attachable)	SBB-DA / SBB-DI	SBB-DA / SBB-DI	SBB-DA / SBB-DI
Green Management	Emission Standard		EMC	EMC	EMC	EMC
	ENERGY STAR Compliant		ENERGY STAR 7.0	ENERGY STAR 7.0	ENERGY STAR 7.0	ENERGY STAR 7.0
	RoHS Compliant		Yes	Yes	Yes	Yes
	Packaging Recyclability		Packing Materials Recyclable	Packing Materials Recyclable	Packing Materials Recyclable	Packing Materials Recyclable
Service	Standard Warranty		3 Years Onsite (Parts / Labor / Backlight)	3 Years Onsite (Parts / Labor / Backlight)	3 Years Onsite (Parts / Labor / Backlight)	3 Years Onsite (Parts / Labor / Backlight)

CONNECTIVITY

1. DisplayPort In
2. DisplayPort Out
3. Antenna In
4. RJ45
5. USB 1
6. USB 2
7. RS232C In
8. RS232C Out
9. Audio In
10. Audio Out
11. HDMI 1
12. HDMI 2
13. DVI / PC / MagicInfo In

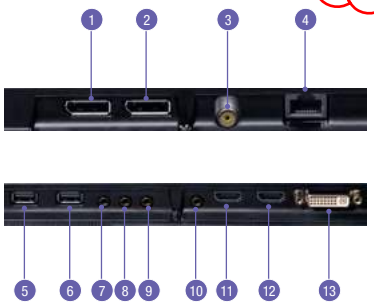

Learn more samsung.com/business insights.samsung.com samsung.com/b2bdigitalsignage

Product support 1-866-SAM4BIZ 1-800-SAMSUNG

Follow us youtube.com/samsungbizusa @SamsungBizUSA

SAMSUNG

©2016 Samsung Electronics America, Inc. Samsung is a registered mark of Samsung Electronics Corp., Ltd. Specifications and design are subject to change without notice. Non-metric weights and measurements are approximate. Simulated screen images. All brand, product, service names and logos are trademarks and or registered trademarks of their respective manufacturers and companies. See samsung.com for detailed information. Printed in USA. LFD-PMFSERIESDSHT-DEC16T

Attachment 3

PRE-BID CLARIFICATION ("PBC") FORM
(ALL questions to be submitted on this form ONLY)

PBC # *(RSCCD USE ONLY)*: 205

PROJECT NAME:	RFP #1819-224 Johnson Student Center at Santa Ana College		
PROJECT NUMBER:	3035	DSA NUMBER:	Demolition, #04-116810 INC 1 and INC 2
EMAIL:	**FacilitiesRFP@rsccd.edu**		

DATE:	10/09/2018		
FROM:	S.Monsen - McCarthy	EMAIL:	SMonsen@McCarthy.com
SPECIFICATION NUMBER:	274116	DRAWING NUMBER:	

REQUESTED CLARIFICATION:

Increment #2 - Spec 274116-1.3B discusses a "100" diagonal wall-mounted screen surface that shall double as a whiteboard", however there is no additional information provided in spec 274116 and the DIV 10 specs do not provide any product information for this white board. Please provide a specification for this whiteboard or indicate if it is to be OFOI.

RESPONSE TO CLARIFICATION, **SUBMITTED AS PART OF AN ADDENDUM**:

See Exhibit B - Major AV Equipment List (attached separately) 100" whiteboard screen is Da-Lite IDEA Screen (spec attached); it is CFCI

RESPONSE PROVIDED BY:	Jeremy Birch, CTS (PlanNet)	DATE:	10/11/18

Attach additional numbered sheets as necessary; however, only one (1) request shall be contained on each submitted form.

IDEA™ Screen

Wall-Mounted Projection Screen and Markerboard

SPECIFICATION DATA

SUGGESTED SPECIFICATIONS: ___100"___ projection screen(s). ___53"___ (H) x ___85"___ (W). The Interactive Dry Erase Application (IDEA) Screen surface to consist of a proprietary projection surface permanently bonded to a magnetic substrate that allows use of dry erase markers, interactive stylus and touch interactivity. Projection surface to have a gain of 2.5 and a viewing half angle of 25 degrees. Frame will be 1" (25mm) thick with a 3/8" (9.5mm) bezel in aluminum with a silver finish. Bezel thickness at the screen surface is .06" (1.5mm). IDEA Screens include top mounting brackets, lower mounting brackets, 24" length marker tray, a set of three dry erase markers, foam eraser, cleaning cloth and cleaning solution.

HDTV (16:9) Format Dimensions

Viewing Area (H x W)		Nominal Diagonal		Overall Frame Dimensions*		Actual Weight		Approximate Ship Weight	
In.	Cm.	In.	Cm.	In.	Cm.	Lbs.	Kg.	Lbs.	Kg.
46" x 81¾"	117 x 208	94"	239	46¾" x 82½"	119 x 210	50	22.7	60	27.2
50" x 89"	127 x 226	102"	259	50¾" x 89¾"	129 x 228	68	30.8	79	35.8
53" x 94¼"	135 x 239	108"	274	53¾" x 95"	137 x 241	76	34.5	87	39.5
59½" x 106"	151 x 269	121"	307	60¼" x 106¾"	153 x 271	94	42.6	106	48.1

Wide (16:10) Format Dimensions

Viewing Area (H x W)		Nominal Diagonal		Overall Frame Dimensions*		Actual Weight		Approximate Ship Weight	
In.	Cm.	In.	Cm.	In.	Cm.	Lbs.	Kg.	Lbs.	Kg.
46" x 73½"	117 x 187	87"	221	46¾" x 74¼"	119 x 189	46	20.9	56	25.4
50" x 80"	127 x 203	94"	239	50¾" x 80¾"	129 x 205	63	28.6	73	33.1
53" x 84¾"	135 x 215	100"	254	53¾" x 85½"	137 x 217	69	31.3	81	36.7
59½" x 95¼"	151 x 242	112"	284	60¼" x 96"	153 x 244	86	39.0	98	44.5

*Add ¾" (2 Cm.) to overall frame height for marker tray and right angle brackets.

PRODUCT NOTES

- Custom formats and sizes available upon request. Contact Da-Lite for feasibility.
- Overall frame dimensions +/- ¼" (0.6 Cm.).
- Detailed dimensional drawing and installation instructions available upon request.
- Specifications subject to change without notice.
- All Da-Lite surfaces are GREENGUARD GOLD Certified.

WHEN ORDERING, MARK APPROPRIATE SELECTIONS

1. Select size from charts.

2. Select optional accessories:

- ☐ Whiteboard Mount
  - ☐ Whiteboard Mount Corner Supports
- ☐ Touch Interactive Bracket Kit - Small
- ☐ Touch Interactive Bracket Kit - Large
- ■ Full length marker tray
- ☐ _____ foam eraser(s) (one eraser already included with each screen)
- ☐ _____ carton(s) of Whiteboard Cleaner - 4oz bottles, 12 bottles per carton (one bottle already included with each screen)
- ☐ _____ pack(s) of cleaning cloths - 12 cloths per pack (one cloth already included with each screen)
- ☐ _____ set(s) of markers - one each of blue, black, and green (one set already included with each screen)

PRODUCT VIEW

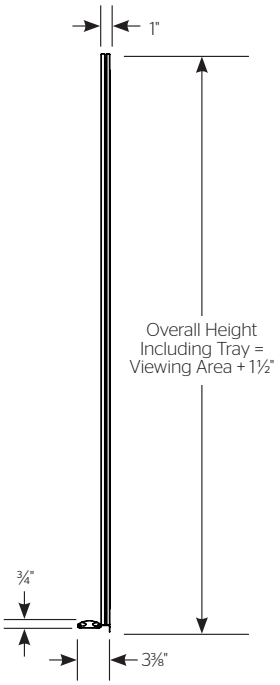

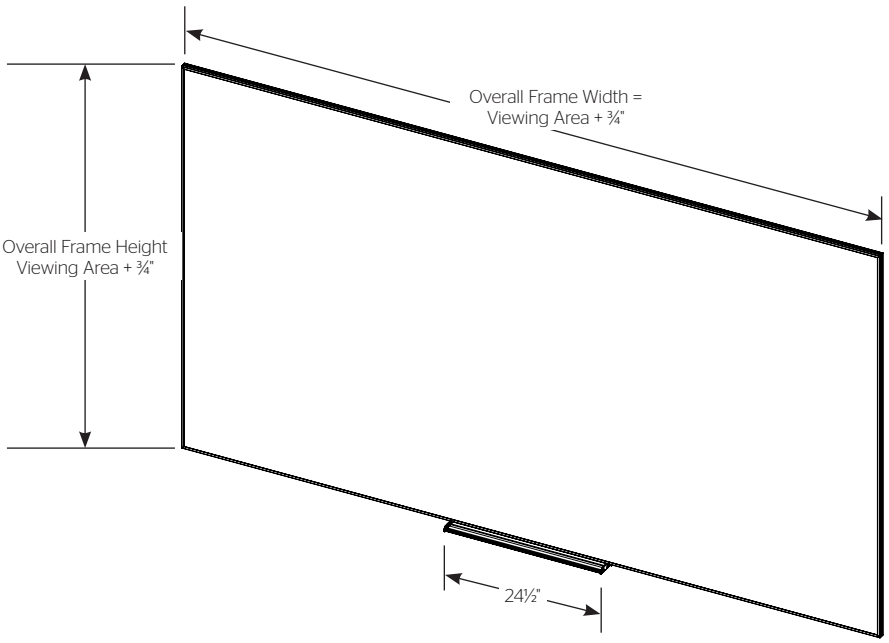

Note: Full Length Tray Width = Viewing Area Width – 1½"

A BRAND OF MILESTONE AV TECHNOLOGIES
www.milestone.com
P 800.622.3737 / 574.267.8101
F 877.325.4832 / 574.267.7804
E info@da-lite.com

In British Columbia, Milestone AV Technologies ULC carries on business as MAVT Milestone AV Technologies ULC.

©2017 Milestone AV Technologies. DL-0486 (Rev. 5) 02.17.
Da-Lite is a registered trademarks of Milestone AV Technologies. All other brand names or marks are used for identification purposes and are trademarks of their respective owners. All patents are protected under existing designations. Other patents pending.

Project Name: _____

Architect: _____

Contractor: _____ Phone: _____

Reseller: _____ Phone: _____

Attachment 3

PRE-BID CLARIFICATION ("PBC") FORM
(ALL questions to be submitted on this form ONLY)

PBC # *(RSCCD USE ONLY)*: 206

PROJECT NAME:	RFP #1819-224 Johnson Student Center at Santa Ana College		
PROJECT NUMBER:	3035	DSA NUMBER:	Demolition, #04-116810 INC 1 and INC 2
EMAIL:	**FacilitiesRFP@rsccd.edu**		

DATE:	10/11/2018		
FROM:	S.Monsen - McCarthy	EMAIL:	SMonsen@McCarthy.com
SPECIFICATION NUMBER:		DRAWING NUMBER:	A2.11 & A2.21

REQUESTED CLARIFICATION:

Increment #2 - Please see attached markup of first and second floor plans (A2.11 & A2.21) for conflicting locations of flat panel TV displays between Architectural and Low Voltage plans. Please clarify at these conflicting locations if a flat panel TV or display is desired and assign details from A9.80 for wall niches and recessed pockets accordingly.

RESPONSE TO CLARIFICATION, **SUBMITTED AS PART OF AN ADDENDUM**:

LV1.11 - Digital signage display added outside The Spot to match enlargement 1/LV3.03. LV1.12 - Informational display added in hallway between Health & Wellness Center and D.S.P.S. Per A2.12 (attached), add callout for digital signage display outside Health & Wellness Center. Refer to attached A2.12, A7.54, LV1.11 and LV1.12

RESPONSE PROVIDED BY:	Jeremy Birch, CTS (PlanNet)	DATE:	10/17/18

Attach additional numbered sheets as necessary; however, only one (1) request shall be contained on each submitted form.

C:\Users\psamon\Documents\RSCCD_SAC_Johnson Center_Central_R16_psamon.rvt
8/9/2018 7:35:10 PM

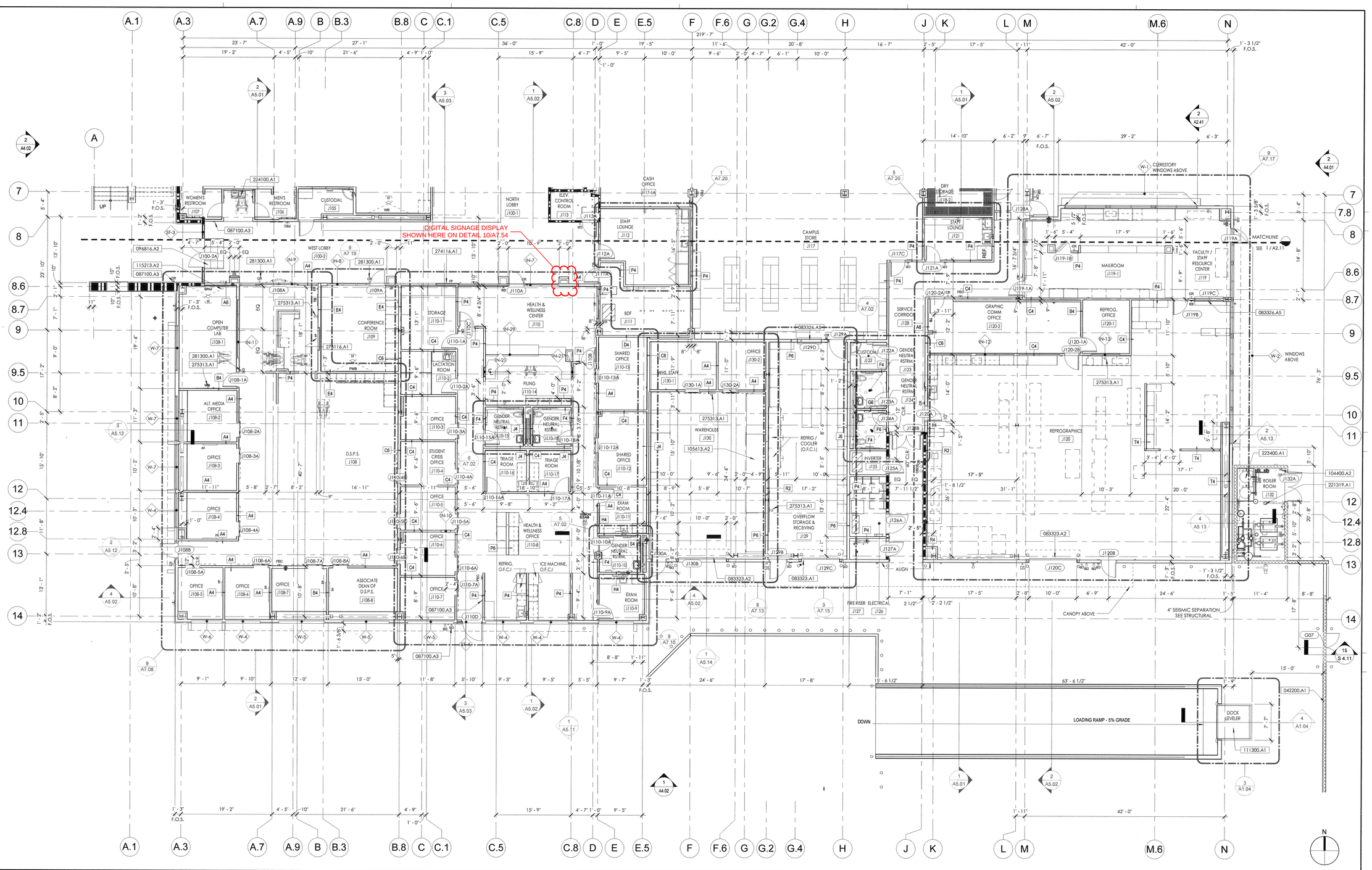

FLOOR PLAN - LEGEND

- METAL STUD WALL
- CONCRETE WALL
- ONE HOUR RATED WALL
- CMU WALL
- 000000.A1 — KEYNOTE, REFER TO KEYNOTE LEGEND
- 101A — DOOR TAG - SEE DOOR SCHEDULE SEE SHEETS A8.30 AND A8.31
- X — PARTITION TYPE - SEE SHEET A9.60
- W — GLAZED SYSTEM TYPE / WINDOW TYPE - SEE SHEETS A8.40, A8.41, A8.42 and A8.50 FOR WINDOW TYPES

FEC	RECESSED FIRE EXTINGUISHER CABINET,SEE DETAILS 6 / A9.80 SPACING MUST COMPLY WITH TITLE 19, ARTICLE 5. SEE 7 / A9.80
EB	EMERGENCY LOCKDOWN BUTTON
CR	CARD READER
PB	PROJECTION SCREEN
PWB	PROJECTION WHITE BOARD
BB	ELECTRONIC BULLETIN BOARD
FP	FLAT PANEL SCREEN
DS	DIGITAL SIGNAGE
IP	IPAD
F.S. 29'-11 1/4"	FINISH SURFACE ELEVATION
0'-0" F.F.	DATUM POINT = XX.XX' SEE CIVIL DWGS.

FLOOR PLAN - GENERAL NOTES

1. ALL DIMENSIONS ARE TO FACE OF STUD OR CENTERLINE OF COLUMN UNLESS OTHERWISE NOTED.
2. REFER TO SHEETS G1.30, G1.40, G2.10 & G2.20 FOR EGRESS AND OCCUPANCY LOADS.
3. SEE SHEET A9.60 FOR WALL TYPES.
4. RECESSED FIRE EXTINGUISHERS MUST COMPLY WITH TITLE 19, ARTICLE 5. DISTRIBUTION SHALL NOT EXCEED 75 FEET TRAVEL DISTANCE FROM ANYWHERE IN THE BUILDING.
5. SEE ENLARGED PLANS FOR DIMENSIONS AND INTERIOR ELEVATION REFERENCES NOT SHOWN.
6. SEE ELECTRICAL DRAWINGS FOR BDF, IDF, AND ELECTRICAL EQUIPMENT. SEE STRUCTURAL DRAWINGS FOR BACKING DETAIL 8 / S8.10
7. REFER TO SHEET G3.10 AND G3.11 FOR ADA CLEARANCE REQUIREMENTS.
8. R-21 WALL INSULATION FOR ALL EXTERIOR WALLS.
9. FOR OUTLET BOX SOUND INSULATION DETAIL SEE 18 / A9.61
10. FOR FINISH FLOOR PATTERN PLANS SEE SHEETS A8.10 AND A8.11
11. FOR RESTROOM WALL TILE PATTERN SEE DETAIL 11 / A7.01
12. SEE SHEET A9.80 FOR TYP INTERIOR DETAILS
13. SLOPE 1.8% MAX. TO FLOOR DRAINS

KEYNOTES

042200.A1	CONCRETE MASONRY UNIT WALL, SEE STRUCTURAL DRAWINGS (ANTI-GRAFITTI RESISTANT COATING AT EXTERIOR SIDE OF EXPOSED WALLS)
083323.A1	OVERHEAD ROLL UP DOOR - MANUAL
083323.A2	OVERHEAD ROLL UP DOOR - MOTORIZED*
083326.A5	OVERHEAD ROLL UP COUNTER DOOR SOLID PANEL- MANUAL*
087100.A3	AUTOMATIC DOOR OPERATOR - WALL MOUNTED, BASIS OF DESIGN: WKK INDUSTRIES INC. - SEE DETAIL 4/G3.11
096816.A2	PERMANENT ENTRY FLOORING WALK-OFF MAT, BASIS OF DESIGN: TANDUS CENTIVA GEO TILE - SEE DETAIL 6/A9.10
104400.A2	SURFACE MOUNTED FIRE EXTINGUISHER CABINET*
105613.A2	PALLET RACK SYSTEM, SEE STRUCTURAL DETAIL 14/S7.20 FOR ANCHORAGE REQUIREMENTS. BASIS OF DESIGN: HANNIBAL INDUSTRIES, SEE SPEC SECTION
111300.A1	DOCK LEVELER*
115213.A2	PROJECTION SCREEN
221319.A1	FLOOR DRAIN - SEE PLUMBING DRAWINGS*
223400.A1	BOILER ROOM EQUIPMENT - SEE PLUMBING DRAWINGS
224100.A1	ACCESSIBLE HI-LO DRINKING FOUNTAIN W/ BOTTLE FILLER - SEE PLUMBING DRAWINGS
274116.A1	FLAT PANEL DISPLAY, W/ WALL MOUNTING BRACKET, REFER TO A/V DRAWINGS. PROVIDE STUD BACKING PER STRUCT. DWGS.
275313.A1	WIRELESS CLOCK, SEE LOW VOLTAGE DRAWINGS
281300.A1	CARD READER - ACCESS CONTROL SYSTEM

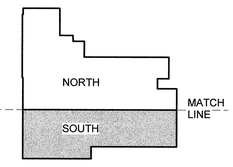

KEY PLAN

FIRST FLOOR PLAN - SOUTH — SCALE 1/8" = 1'-0" — 1

hpi architecture
www.hpiarchitecture.com
115 22nd street
Newport Beach, CA 92663
o: 949. 675. 6442

CONSULTANTS

SEALS / APPROVALS

IDENTIFICATION STAMP
DIV. OF THE STATE ARCHITECT
FILE: 30-C2
A# 04 - 116810
AC PB FLS RY SS TY
DATE AUG 31 2018

PROJECT TITLE
JOHNSON STUDENT CENTER
INCREMENT 2
1530 W 17TH ST SANTA ANA CA 92706

RANCHO SANTIAGO Community College District

SUBMITTALS

#	DATE	DESCRIPTION
	08/13/2018	DSA FINAL SUBMITTAL

PROJECT IDENTIFICATION Project Number

THESE DRAWINGS ORIGINALLY CREATED IN AUTODESK REVIT V. 2016 U.O.N.

THE ORIGINAL SIZE OF THIS SHEET IS 30" X 42".

DRAWN BY MS, AMF

CHECKED BY LP

THESE DRAWINGS AND SPECIFICATIONS ARE THE PROPERTY AND COPYRIGHT OF THE ARCHITECT AND SHALL NOT BE USED ON ANY OTHER PROJECT OR LOCATIONS EXCEPT AS DESCRIBED ON THE DRAWINGS, WITHOUT WRITTEN AGREEMENT WITH THE ARCHITECT.

© HILL PARTNERSHIP INC. 2017

SHEET TITLE
FIRST FLOOR PLAN - SOUTH

SHEET NUMBER
A2.12

DSA SUBMITTAL

C:\Users\AMatpou\Documents\SSCCD_SAC_Johnson Center_Central_R16_AzedsBne.rvt
8/9/2018 7:08:38 PM

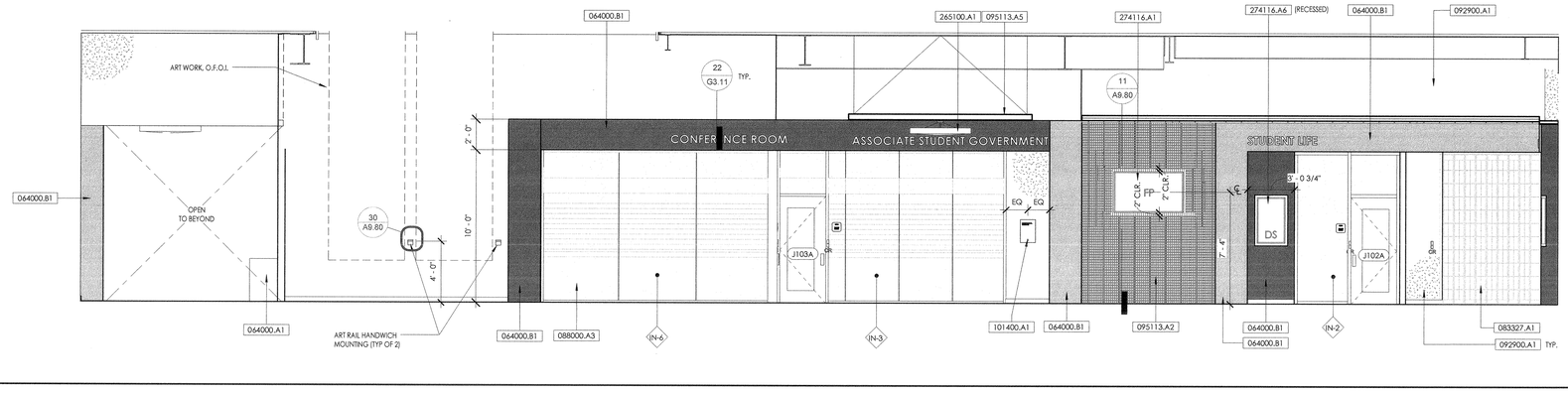

FIRST FLOOR J100-1 NORTH LOBBY - WEST SECTION / ELEVATION — SCALE 1/4" = 1'-0" — 7

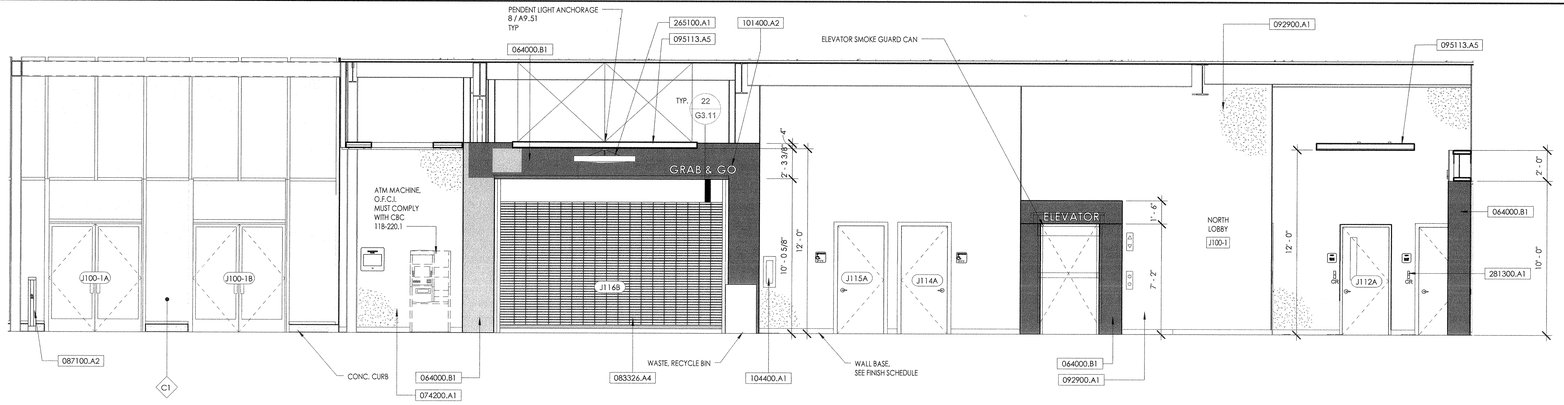

FIRST FLOOR J100-1 NORTH LOBBY - EAST ELEVATION — SCALE 1/4" = 1'-0" — 8

KEYNOTES

055100.A2	INTERIOR METAL STAIRS W/ CONCRETE FILLED TREAD PAN W/LINOLEUM FINISH AND ABRASIVE NOSINGS
064000.A1	BUILT IN CASEWORK, SEE FINISH SCHEDULE
064000.A2	COUNTERTOP, SEE FINISH SCHEDULE
064000.B1	TRANSLUCENT RESIN PANEL SYSTEM, BASIS OF DESIGN: LUMICOR, SEE FINISH SCHEDULE AND SPECIFICATIONS*
074200.A1	DECORATIVE HIGH PRESSURE LAMINATE PANEL (HPL), BASIS OF DESIGN "TRESPA METEON" - ICC REPORT (ESR-1687)
083100.A1	S.S. RECESSED 12" x 12" ACCESS PANEL. REFER TO INTERIOR ELEVATIONS FOR LOCATION, ACCESS PANEL TO BE INSTALLED ALIGNED WITH PORCELAIN TILE JOINTS IN RESTROOMS, SEE SPECS
083326.A4	OVERHEAD ROLL UP SECURITY GRILLE DOOR - MOTORIZED*
083327.A1	SIDE FOLDING SECURITY GRILLE - MOTORIZED
084413.A1	CURTAIN WALL SYSTEM WITH FIXED GLAZING, BASIS OF DESIGN: ARCADIA OFFSET GLAZED T500-OPG3000 SERIES
087100.A2	AUTOMATIC DOOR OPERATOR - BOLLARD, BASIS OF DESIGN: WIKK INDUSTRIES INC. - SEE DETAIL 5/G3.11
088000.A3	SELF-ADHERED TRANSLUCENT POLYESTER FILM, 3.2 MIL THICKNESS, BASIS OF DESIGN: 3M CRYSTAL - DUSTED WHITE-7725SE-314, HATCHED AREAS ONLY, SEE SPECS
092900.A1	GYPSUM BOARD, PAINTED PER FINISH SCHEDULE
095113.A2	ACOUSTICAL CEILING AND WALL SYSTEM, PER FINISH SCHEDULE - BASIS OF DESIGN: ARMSTRONG WOODWORKS CEILING AND WALLS
095113.A3	ACOUSTICAL WOOD PANEL SYSTEM, PER FINISH SCHEDULE - BASIS OF DESIGN: ARMSTRONG WOODWORKS VECTOR PANEL SYSTEM
095113.A5	ACOUSTICAL CEILING CLOUD PANEL SYSTEM, PER RCP AND FINISH SCHEDULE - BASIS OF DESIGN: ARMSTRONG
101116.A2	MARKER BOARD - 16'-0"W x 7'-9"H FROSTED GLASS , BASIS OF DESIGN: EGAN-GLASSWRITE
101400.A1	SIGNAGE - SEE SIGNAGE PLAN FOR TYPE AND LOCATION
101400.A2	CAST ALUMINUM LETTERS PIN MOUNTED TO FACADE
102600.A1	CRASH RAIL, TOP OF RAIL MOUNTED 34" A.F.F., SEE SPECS
104400.A1	RECESSED FIRE EXTINGUISHER CABINET*
224100.A1	ACCESSIBLE HI-LO DRINKING FOUNTAIN W/ BOTTLE FILLER - SEE PLUMBING DRAWINGS
265100.A1	INTERIOR LIGHTING FIXTURE, SUSPENDED - SEE ELECTRICAL DRAWINGS
274116.A1	FLAT PANEL DISPLAY, W/ WALL MOUNTING BRACKET, REFER TO A/V DRAWINGS. PROVIDE STUD BACKING PER STRUCT. DWGS.
274116.A6	ELECTRONIC SIGNAGE KIOSK DISPLAYS, W/ WALL MOUNTING BRACKET, REFER TO A/V DRAWINGS. PROVIDE STUD BACKING PER STRUCT. DWGS.
281300.A1	CARD READER - ACCESS CONTROL SYSTEM

CASEWORK - LEGEND

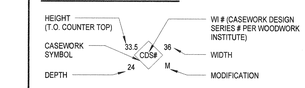

NOTE: PROVIDE LOCKS TO ALL CABINET DOORS

INTERIOR ELEVATION GENERAL NOTES:

1. SEE SHEETS G3.10 & G3.11 FOR SIGNAGE AND ACCESSIBILITY STANDARDS
2. SEE A8.20 FOR ROOM FINISH SCHEDULE & A8.21 FOR MATERIAL & COLOR SCHEDULE

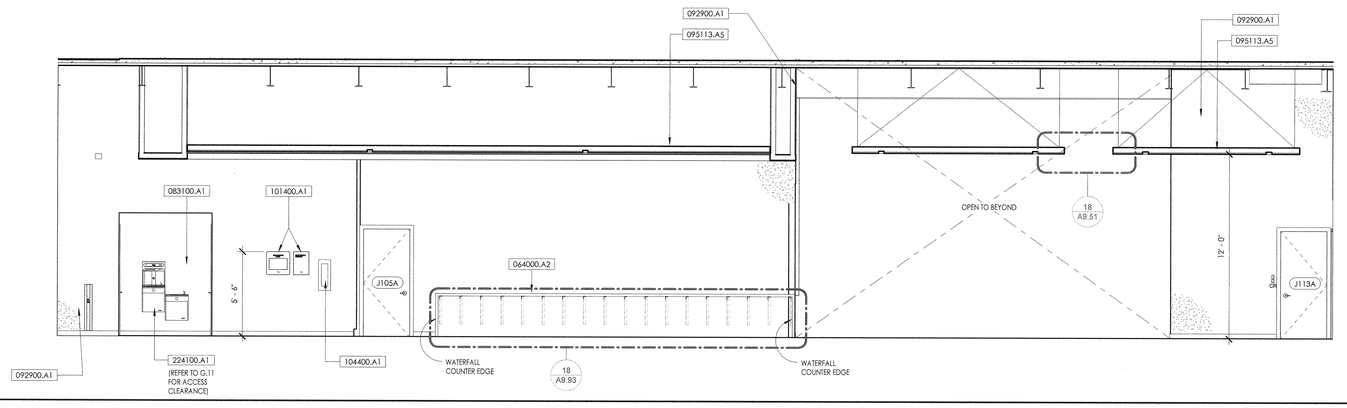

FIRST FLOOR J100-2 WEST LOBBY - NORTH ELEVATION — SCALE 1/4" = 1'-0" — 9

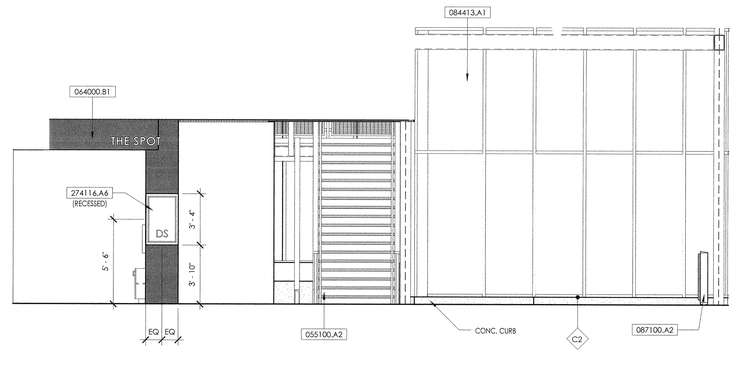

FIRST FLOOR J100-1 LOBBY - NORTH ELEVATION — SCALE 1/4" = 1'-0" — 1

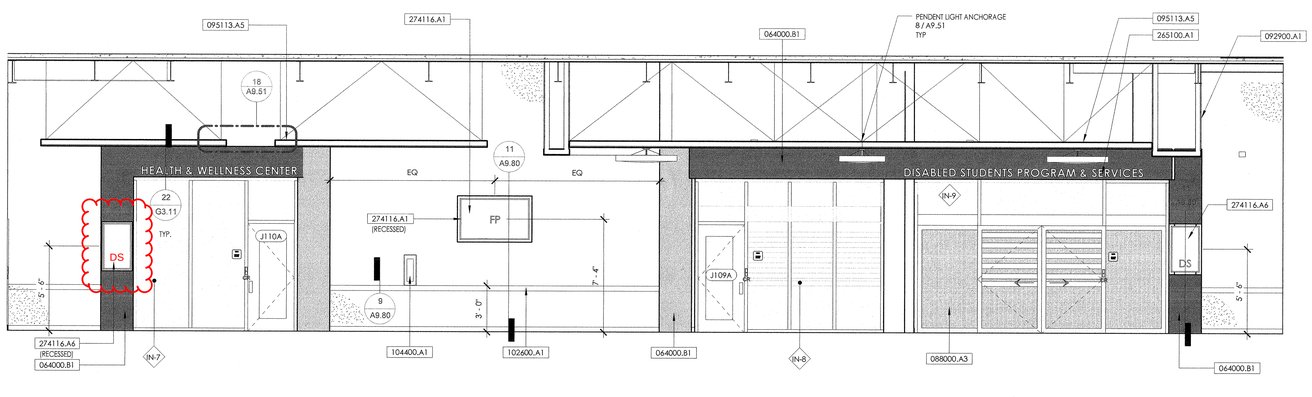

FIRST FLOOR J100-2 WEST LOBBY - SOUTH ELEVATION — SCALE 1/4" = 1'-0" — 10

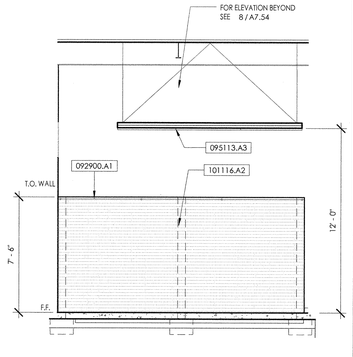

J100-1 NORTH LOBBY - EAST ELEV. — SCALE 1/4" = 1'-0" — 5

hpi architecture
www.hpiarchitecture.com
115 22nd street
Newport Beach, CA 92663
o: 949. 675. 6442

CONSULTANTS

SEALS / APPROVALS

IDENTIFICATION STAMP
DIV. OF THE STATE ARCHITECT
FILE: 30-C2
A# 04 - 116810
AC PB FLS BF SS TY
DATE AUG 31 2018

PROJECT TITLE
JOHNSON STUDENT CENTER
INCREMENT 2
1530 W 17TH ST SANTA ANA CA 92706

RANCHO SANTIAGO Community College District

SUBMITTALS		
#	DATE	DESCRIPTION
	08/13/2018	DSA FINAL SUBMITTAL

PROJECT IDENTIFICATION Project Number

THESE DRAWINGS ORIGINALLY CREATED IN AUTODESK REVIT V. 2016 U.O.N.

THE ORIGINAL SIZE OF THIS SHEET IS 30" X 42".

DRAWN BY MS, AMF

CHECKED BY LP

THESE DRAWINGS AND SPECIFICATIONS ARE THE PROPERTY AND COPYRIGHT OF THE ARCHITECT AND SHALL NOT BE USED ON ANY OTHER PROJECT OR LOCATIONS EXCEPT AS DESCRIBED ON THE DRAWINGS, WITHOUT WRITTEN AGREEMENT WITH THE ARCHITECT.

© HILL PARTNERSHIP INC. 2017

SHEET TITLE
INTERIOR ELEVATIONS - LOBBY

SHEET NUMBER
A7.54

DSA SUBMITTAL

SPECIFIC PLAN NOTES

- ATM MACHINE (OWNER FURNISHED AND OWNER INSTALLED).
- DIGITAL SIGNAGE MONITOR (CONTRACTOR FURNISHED CONTRACTOR INSTALLED).
- INFORMATIONAL FLAT PANEL DISPLAY (CONTRACTOR FURNISHED CONTRACTOR INSTALLED).
- ELECTRICAL CONTRACTOR SHALL PROVIDE AND INSTALL J-BOX FOR FUTURE FLAT PANEL DISPLAY.
- INTEGRATED CARD READER. REFER TO 5/G3.11 FOR BOLLARD MOUNTING DETAIL.
- FOR ELEVATOR TELEPHONE LINE. COMMUNICATIONS CONTRACTOR SHALL PROVIDE AND INSTALL (1)CAT6 AND SUPPORTING HARDWARE IN THE ELEVATOR CONTROL ROOM, THE CABLE SHALL BE UNTERMINATED WITH 15' SERVICE LOOP AND LEAVE COILED FOR FUTURE CONNECTION FOR THE ELEVATOR CONTRACTOR. ELEVATOR CONTRACTOR SHALL DO THE FINAL TERMINATION INTO THE ELEVATOR CONTROLLER EQUIPMENT. ELECTRICAL CONTRACTOR SHALL IDENTIFY EXACT ROUTE FOR CONDUITS IN COORDINATION ON THE FIELD WITH COMMUNICATIONS AND ELEVATOR CONTRACTORS.

GENERAL NOTES

1. REFER TO ARCHITECTURAL DRAWINGS FOR ADDITIONAL ARCHITECTURAL, MILLWORK AND FURNITURE INTEGRATION DETAILS.
2. SEE ENLARGE PLANS FOR ADDITIONAL DEVICES THAT ARE NOT SHOWN IN THE FLOOR PLAN

MATCH LINE A

MATCH LINE B - SEE LV1.12

MATCH LINE A

MATCH LINE B - SEE LV1.12

KEY PLAN

LOW VOLTAGE FIRST FLOOR PLAN - MATCH LINE A

SCALE 1/8" = 1'-0"

1

architecture
www.hpiarchitecture.com
115 22nd street
Newport Beach, CA 92663
o: 949. 675. 6442

CONSULTANTS
PlanNet
2951 Saturn Street, Suite E, Brea, CA 92821
Phone: 714.982.5800 Fax: 714.982.5801
plannet.com

REGISTERED COMMUNICATIONS DISTRIBUTION DESIGNER
BICSI
CARLO A. MONTON
REG. NO. 201706R
EXPIRES 12-31-20
RCDD
SIGNATURE 08.01.2018

SEALS / APPROVALS

IDENTIFICATION STAMP
DIV. OF THE STATE ARCHITECT
FILE: 30-C2
A# 0 4 - 116810

AC _____ FLS _____ SS _____

DATE _____

PROJECT TITLE

JOHNSON STUDENT CENTER
INCREMENT 2
1530 W 17TH ST SANTA ANA CA 92706

RANCHO SANTIAGO Community College District

SUBMITTALS

#	DATE	DESCRIPTION
	08/13/2018	DSA FINAL SUBMITTAL

PROJECT IDENTIFICATION

THESE DRAWINGS ORIGINALLY CREATED IN AUTODESK REVIT V. 2016

THE ORIGINAL SIZE OF THIS SHEET IS 30" X 42".

DRAWN BY -

CHECKED BY -

THESE DRAWINGS AND SPECIFICATIONS ARE THE PROPERTY AND COPYRIGHT OF THE ARCHITECT AND SHALL NOT BE USED ON ANY OTHER PROJECT OR LOCATIONS EXCEPT AS DESCRIBED ON THE DRAWINGS, WITHOUT WRITTEN AGREEMENT WITH THE ARCHITECT.

© HILL PARTNERSHIP INC. 2016

SHEET TITLE

LOW VOLTAGE FIRST FLOOR PLAN - MATCH LINE A

SHEET NUMBER

LV1.11

100% CONSTRUCTION DOCUMENTS

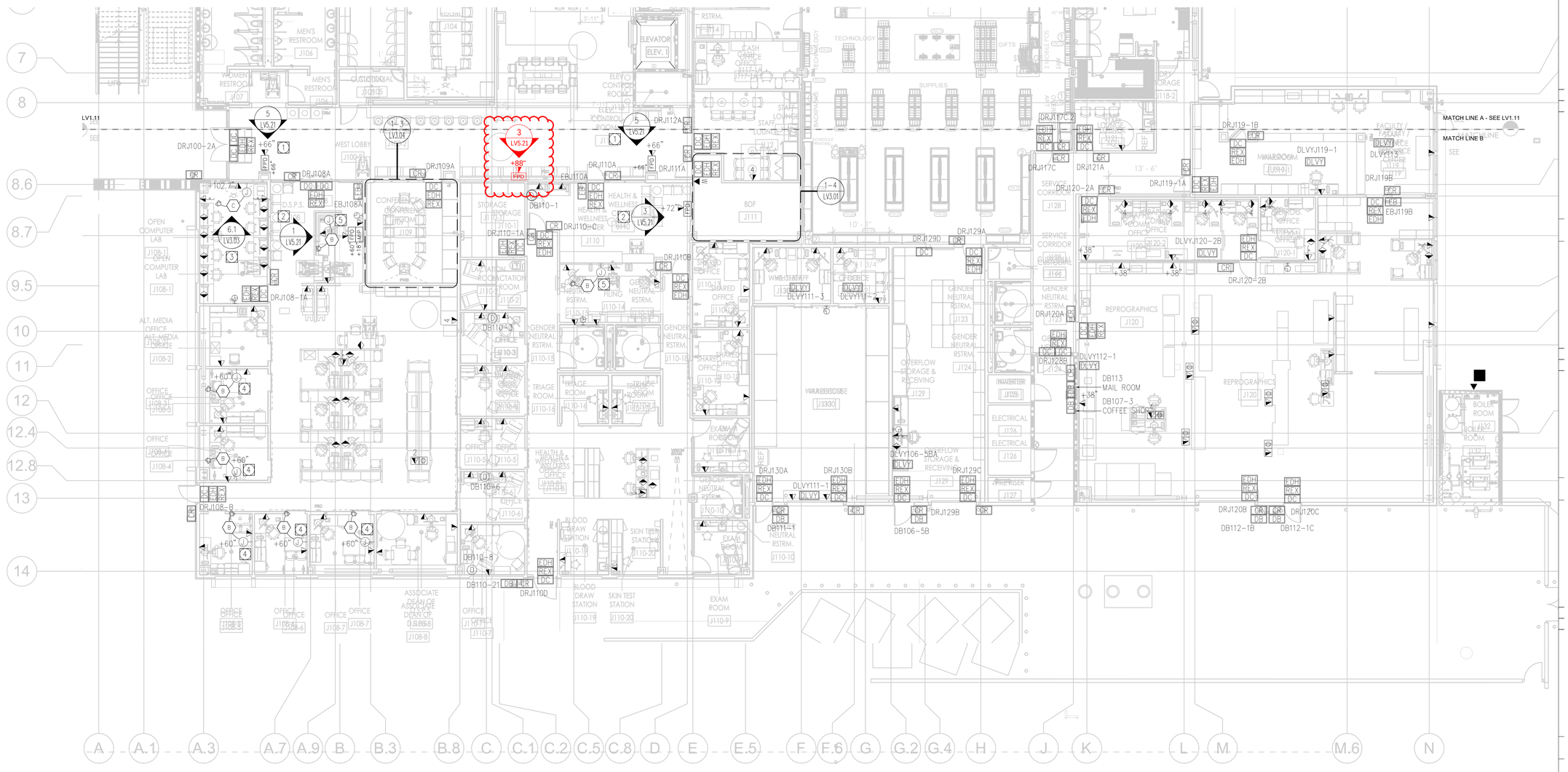

SPECIFIC PLAN NOTES

- DIGITAL SIGNAGE MONITOR (CONTRACTOR FURNISHED CONTRACTOR INSTALLED).
- INFORMATIONAL FLAT PANEL DISPLAY (CONTRACTOR FURNISHED CONTRACTOR INSTALLED).
- ULTRA SHORT THROW PROJECTOR.
- ELECTRICAL CONTRACTOR SHALL PROVIDE AND INSTALL J-BOX FOR FUTURE FLAT PANEL DISPLAY.
- ELECTRICAL CONTRACTOR SHALL PROVIDE AND INSTALL J-BOX FOR DVD PLAYER.
- FOR IRRIGATION CONTROLLER.

GENERAL NOTES

1. REFER TO ARCHITECTURAL DRAWINGS FOR ADDITIONAL ARCHITECTURAL, MILLWORK AND FURNITURE INTEGRATION DETAILS.
2. SEE ENLARGE PLANS FOR ADDITIONAL DEVICES THAT ARE NOT SHOWN IN THE FLOOR PLAN.

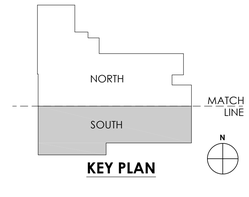

KEY PLAN

LOW VOLTAGE FIRST FLOOR PLAN - MATCH LINE B

SCALE 1/8" = 1'-0"

1

HPI architecture
www.hpiarchitecture.com
115 22nd street
Newport Beach, CA 92663
o: 949. 675. 6442

CONSULTANTS

PlanNet
2951 Saturn Street, Suite E, Brea, CA 92821
Phone: 714.982.5800 Fax: 714.982.5801
plannet.com

REGISTERED COMMUNICATIONS DISTRIBUTION DESIGNER
BICSI
CARLO A. MONTON
REG. NO. 201706R
EXPIRES 12-31-20
RCDD
SIGNATURE 08.01.2018

SEALS / APPROVALS

IDENTIFICATION STAMP
DIV. OF THE STATE ARCHITECT
FILE: 30-C2
A# 0 4 - 116810

AC _____ FLS _____ SS _____

DATE _____

PROJECT TITLE

JOHNSON STUDENT CENTER
INCREMENT 2
1530 W 17TH ST SANTA ANA CA 92706

RANCHO SANTIAGO Community College District

SUBMITTALS		
#	DATE	DESCRIPTION
	08/13/2018	DSA FINAL SUBMITTAL

PROJECT IDENTIFICATION

THESE DRAWINGS ORIGINALLY CREATED IN AUTODESK REVIT V. 2016

THE ORIGINAL SIZE OF THIS SHEET IS 30" X 42".

DRAWN BY -

CHECKED BY -

THESE DRAWINGS AND SPECIFICATIONS ARE THE PROPERTY AND COPYRIGHT OF THE ARCHITECT AND SHALL NOT BE USED ON ANY OTHER PROJECT OR LOCATIONS EXCEPT AS DESCRIBED ON THE DRAWINGS, WITHOUT WRITTEN AGREEMENT WITH THE ARCHITECT.

© HILL PARTNERSHIP INC. 2016

SHEET TITLE

LOW VOLTAGE FIRST FLOOR PLAN - MATCH LINE B

SHEET NUMBER

LV1.12

100% CONSTRUCTION DOCUMENTS

Attachment 3

PRE-BID CLARIFICATION ("PBC") FORM
(ALL questions to be submitted on this form ONLY)

PBC # *(RSCCD USE ONLY)*:	207

PROJECT NAME:	RFP #1819-224 Johnson Student Center at Santa Ana College		
PROJECT NUMBER:	3035	DSA NUMBER:	Demolition, #04-116810 INC 1 and INC 2
EMAIL:	**FacilitiesRFP@rsccd.edu**		

DATE:	10/11/2018		
FROM:	S.Monsen - McCarthy	EMAIL:	SMonsen@McCarthy.com
SPECIFICATION NUMBER:		DRAWING NUMBER:	

REQUESTED CLARIFICATION:

Increment #2 - Locations throughout first and second floor plans show flat panel display boards that appear to be surface mounted as opposed to recessed in wall (example attached for office room typical of J212-1-11). Please confirm that Wall Niche at Flat Panel Display details 11,12,23/A9.80 do not relate to these surface mounted TVs on first and second floor plans. If recessed wall niche is desired at locations please add corresponding details to locations for coordination with drywall and framers.

RESPONSE TO CLARIFICATION, **SUBMITTED AS PART OF AN ADDENDUM**:

CONFIRMED THESE FLAT PANEL DISPLAYS ARE SURFACE MOUNTED NO WALL NICHE. WALL NICHE'S ARE FOR FLAT PANEL DISPLAYS OVER 41"WIDE AND 4" DEEP INCLUDING MOUNT.

RESPONSE PROVIDED BY:	Julia D. Jones / hpi	DATE:	10/18/18

Attach additional numbered sheets as necessary; however, only one (1) request shall be contained on each submitted form.

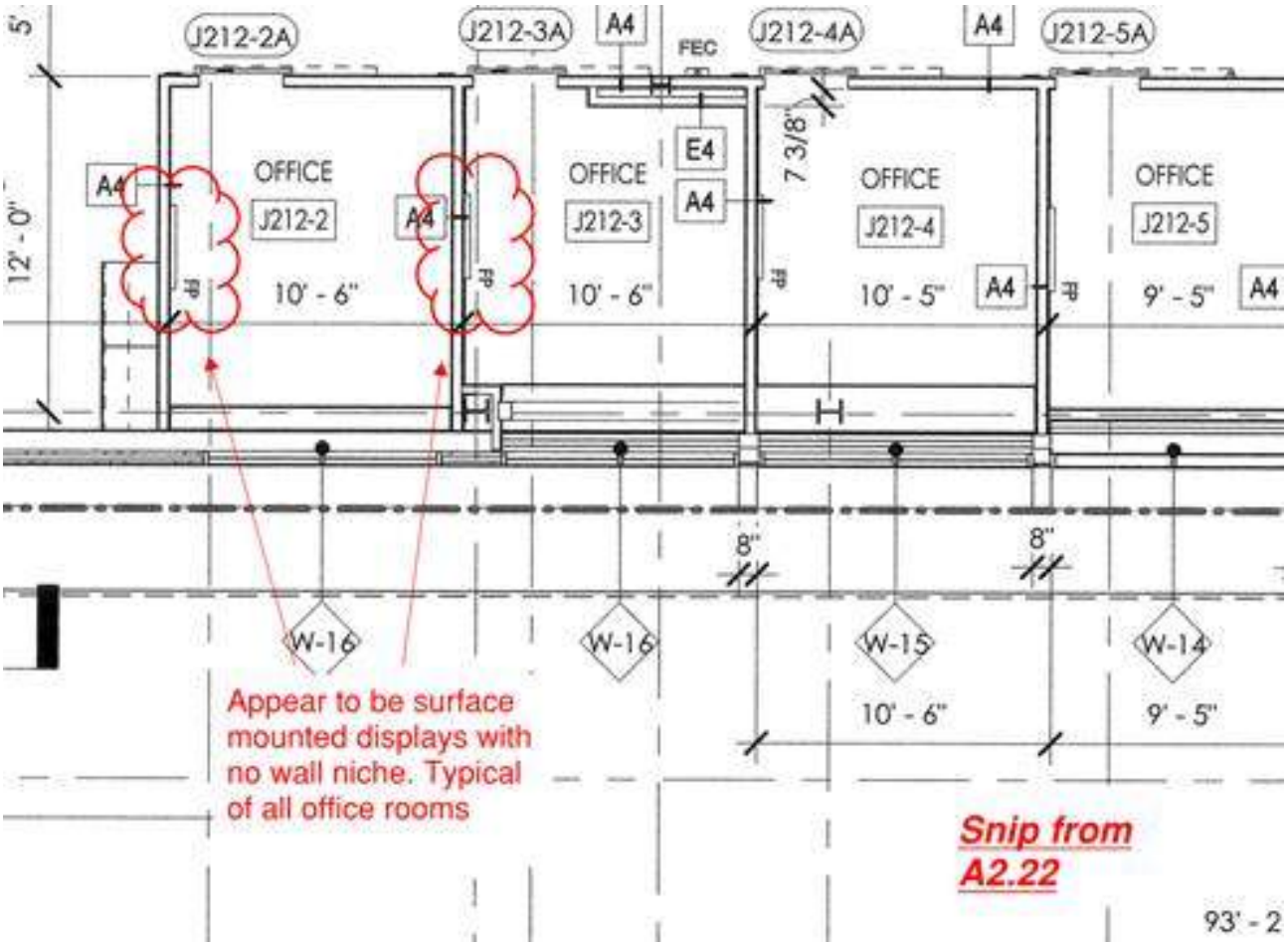
5'
12' - 0"
J212-2A
J212-3A
A4
FEC
J212-4A
A4
J212-5A
A4
OFFICE
J212-2
10' - 6"
OFFICE
J212-3
10' - 6"
E4
A4
7 3/8"
OFFICE
J212-4
10' - 5"
A4
OFFICE
J212-5
9' - 5"
A4
8"
8"
W-16
W-16
W-15
W-14
10' - 6"
9' - 5"
Appear to be surface mounted displays with no wall niche. Typical of all office rooms
Snip from A2.22
93' - 2

Attachment 3

PRE-BID CLARIFICATION ("PBC") FORM
(ALL questions to be submitted on this form ONLY)

PBC # *(RSCCD USE ONLY)*:	208

PROJECT NAME:	RFP #1819-224 Johnson Student Center at Santa Ana College		
PROJECT NUMBER:	3035	DSA NUMBER:	Demolition, #04-116810 INC 1 and INC 2
EMAIL:	**FacilitiesRFP@rsccd.edu**		

DATE:	10/11/2018		
FROM:	S.Monsen - McCarthy	EMAIL:	SMonsen@McCarthy.com
SPECIFICATION NUMBER:	274116	DRAWING NUMBER:	

REQUESTED CLARIFICATION:

Increment #2 - Specification Section 274116
•Please confirm that flat panel displays are contractor furnished, contractor installed
If CFCI, please provide a specification for these flat panel displays.

RESPONSE TO CLARIFICATION, **SUBMITTED AS PART OF AN ADDENDUM**:

See Exhibit B - Major AV Equipment List (attached separately)

RESPONSE PROVIDED BY:	Julia D. Jones / hpi	DATE:	10/22/18

Attach additional numbered sheets as necessary; however, only one (1) request shall be contained on each submitted form.

Attachment 3

PRE-BID CLARIFICATION ("PBC") FORM
(ALL questions to be submitted on this form ONLY)

PBC # *(RSCCD USE ONLY)*: 209

PROJECT NAME:	RFP #1819-224 Johnson Student Center at Santa Ana College		
PROJECT NUMBER:	3035	DSA NUMBER:	Demolition, #04-116810 INC 1 and INC 2
EMAIL:	**FacilitiesRFP@rsccd.edu**		

DATE:	10/11/2018		
FROM:	S.Monsen - McCarthy	EMAIL:	SMonsen@McCarthy.com
SPECIFICATION NUMBER:		DRAWING NUMBER:	A7.06

REQUESTED CLARIFICATION:

Increment #2 - Recessed flat panel TVs throughout project do not contain cut sections showing wall niche details from A9.80. Where missing, please add details 11,12 or 23 of A9.80 to floor plans to clarify for coordination with drywall and framers on where and how these conditions should occur. See markup for example of location on first floor plans.

RESPONSE TO CLARIFICATION, **SUBMITTED AS PART OF AN ADDENDUM**:

WALL NICHE'S PER 11 AND 12/A9.80 OCCURS AT: DSPS J108, HEALTH & WELLNESS CENTER J110, LOUNGE J200-4, CONFERENCE ROOM J219-1, 219-2, 219-3, SPOT RECIPTION J101. WALL NICHE PER 23/A9.80 OCCURS AT: CAMPUS STORE J117.

RESPONSE PROVIDED BY:	Julia D. Jones / hpi	DATE:	10/22/18

Attach additional numbered sheets as necessary; however, only one (1) request shall be contained on each submitted form.

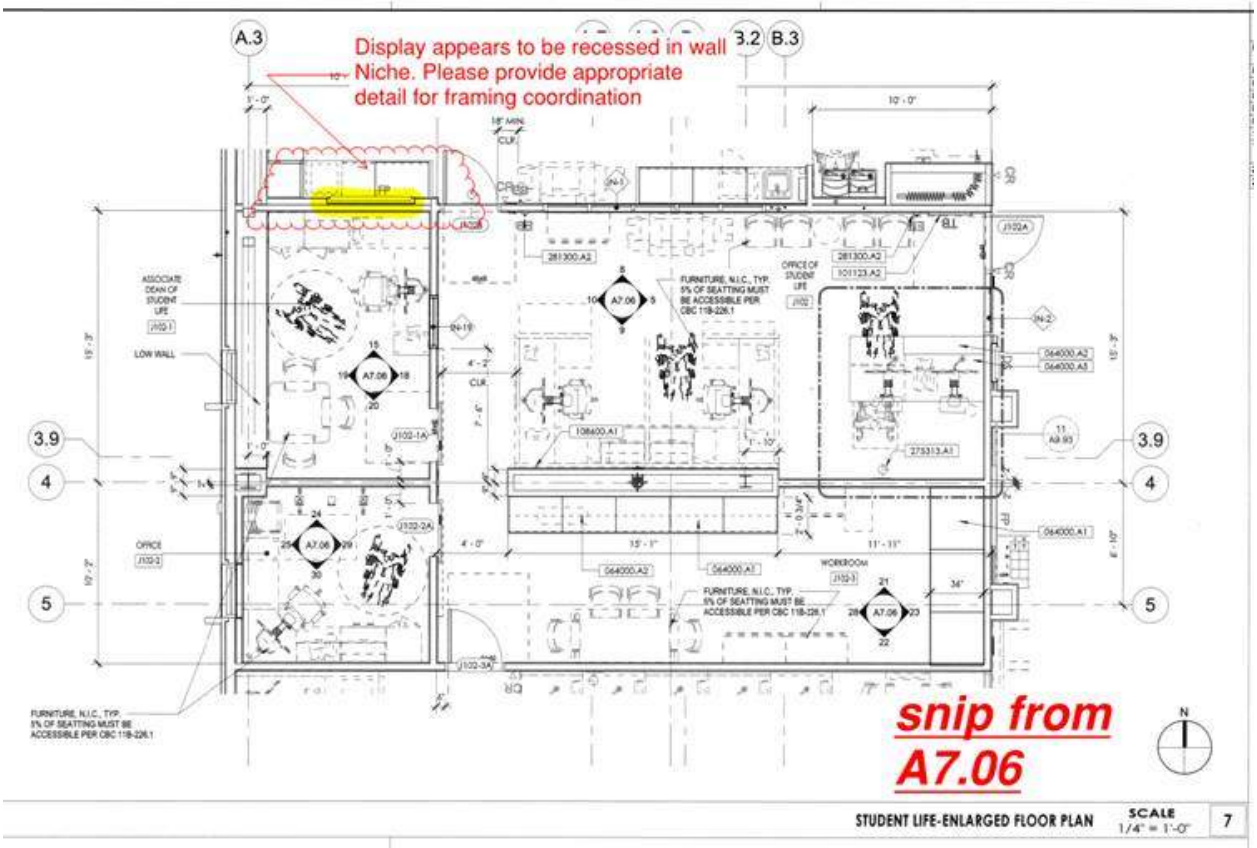

STUDENT LIFE-ENLARGED FLOOR PLAN SCALE 1/4" = 1'-0" 7

Attachment 3

PRE-BID CLARIFICATION ("PBC") FORM
(ALL questions to be submitted on this form ONLY)

PBC # *(RSCCD USE ONLY)*: 210

PROJECT NAME:	RFP #1819-224 Johnson Student Center at Santa Ana College		
PROJECT NUMBER:	3035	DSA NUMBER:	Demolition, #04-116810 INC 1 and INC 2
EMAIL:	**FacilitiesRFP@rsccd.edu**		

DATE:	10/10/2018		
FROM:	S.Monsen - McCarthy	EMAIL:	SMonsen@McCarthy.com
SPECIFICATION NUMBER:		DRAWING NUMBER:	A8.21 & A10.01

REQUESTED CLARIFICATION:

Increment #2 - Sheet A8.21
RS1 is called out as Lumiform Pepperdust Opaque, please confirm the product information received from the manufacturer is correct as follows:
RS1 – SO72685, Glacier, Lumiform, .472", Front Finish-Matte, Back Finish-Matte Pepperdust Opaque.

RS2 is called out as Lumiform Silver Spun with Illume and detail 2/A9.91 calls for the panel to be 1/2" thick back-lit translucent resin panels, however the product only comes in 3/8" thicknesses. Please confirm the product information received from the manufacturer is correct as follows:
RS2 – SO73015-2, Silver Spun, Lumiform, .354", Front Finish-Matte, Back Finish-Matte Illume Film.

Details for the resin panels, for example 1/A10.01, call for flame polish on all edges, however Lumicor does not provide a flame polish. They will provide a gloss finish. Please confirm this is acceptable.

RESPONSE TO CLARIFICATION, **SUBMITTED AS PART OF AN ADDENDUM**:

RS1 confirm. RS2 confirm material and 1/2" thickness, please see manufactures sheet attached. RS2.1 will be the Lumiform Silver Spun, Back Finish-Matte Dove Opaque. Flame polish is a method of polishing a material using heat, that is to be applied only at the edges. Not the surface of the material because RS1 & RS2 have a matte surface finish. Please see Lumiform location diagram attached.

RESPONSE PROVIDED BY:	Julia D. Jones / hpi	DATE:	10/22/18

Attach additional numbered sheets as necessary; however, only one (1) request shall be contained on each submitted form.

Metallic & Glass › Metallic ›

SILVER SPUN™ *More Colors Available*

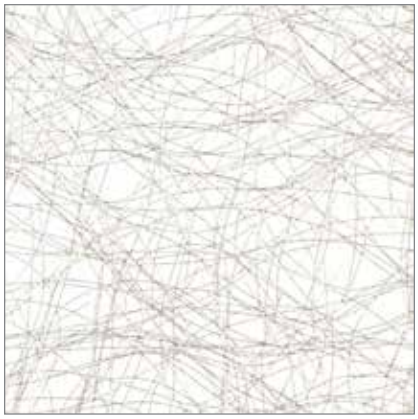

SCALE | 3½"x 3½"
9 x 9 cm

SCALE | 8"x 8"
20 x 20 cm

SCALE | 24" x 48"
61 x 122 cm

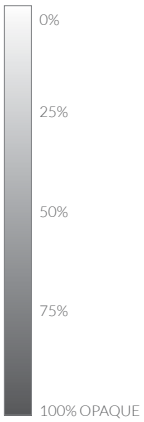

OPACITY
Based on approximate amount of light showing through the panel.

PRODUCT SPECIFICATIONS

	GAUGES*	LC	LF	LS
Available Sizes	3/64" .050 " (1.27 mm) **		•	
	1/16" .060" (1.5 mm)			
	1/8" .118" (3 mm)	•	•	
	5/32" .160" (4 mm)	•		
	3/16" .196" (5 mm)	•		
	1/4" .236" (6 mm)	•	•	
	3/8" .354" (9 mm)	•	•	
	1/2" .472" (12 mm)	•	•	
	3/4" .708" (18 mm)	•		
	1" .944" (24 mm)	•		
	Standard: 48"x 96" (1219 x 2438 mm)	•	•	
	Oversize: 48"x 120" (1219 x 3048 mm)	•	•	
Design	Standard Finishes	Gloss/Gloss		
	Décor Direction	Non-directional		
	Pattern Repeat			
$	Price Group	C		

* Not all decors are available in every gauge and may vary by resin. Gauge tolerance is ± 10%.

** Outside of the Wall Protection program a ten sheet minimum will apply for the .050" gauge.

KEY | LC = Lumiclear LF = Lumiform
LS = Lumishield EX • = Option Available

DESCRIPTION

Silver Spun is created by layering and adhering thousands of fine metal threads together. All handmade, this décor is as stunning as it is unique. Add beautiful texture and shine to any application.

Thermoforming is not available for this particular décor.

AVAILABLE ADD-ONS

ChemShield™
A barrier used to increase the chemical resistance of Lumiclear panels.

Reflective Finishes™
A reflective surface that adds dimension and a sophisticated sparkle.

Illume™
Adding Illume to the back of a panel provides a soft light diffusion.

Marker Board™
A high quality dry erase finish that can be added to any Lumicor panel.

Opaque™
An opaque backing on Lumiclear or Lumiform creates a fully opaque panel.

Spectrum™
Lumicor's color technology can be applied to add a splash of color to any standard décor.

© Copyright Lumicor 2017 – All Rights Reserved. Images are for reference only and may not exactly represent the final product. Material, color, density or scale may vary based on the artisan nature of the product.

Metallic & Glass › Metallic ›

SILVER SPUN™

More Colors Available

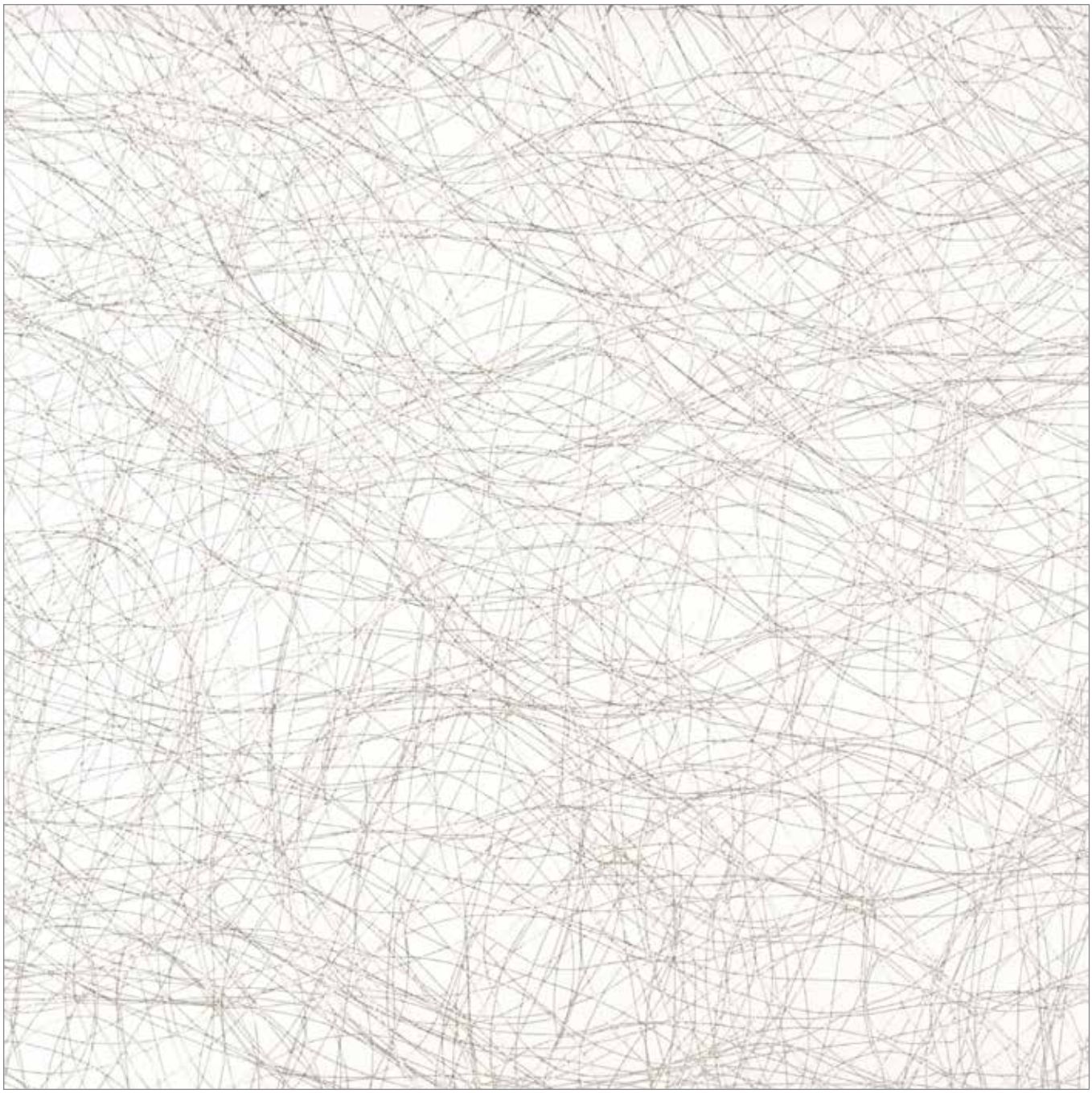

Pattern to scale

© Copyright Lumicor 2017 – All Rights Reserved. Images are for reference only and may not exactly represent the final product. Material, color, density or scale may vary based on the artisan nature of the product.

8/9/2018 7:09:34 PM C:\Users\AMatpour\Documents\SCCD_SAC_Johnson Center_Central_R16_Asedline.rvt

RS-1

RS-2.1
Lumiform Silver Spun, Back
Finish-Matte Dove Opaque

FLOOR FINISH PLAN-FIRST FLOOR SCALE 3/32" = 1'-0" 1

FLOORING FINISH LEGEND

CPT-1	CARPET - TYPE #1
CPT-2	CARPET - TYPE #2
RSF-1	RESILIENT FLOORING - TYPE #1
RSF-2	RESILIENT FLOORING - TYPE #2
RSF-3	RESILIENT ACOUSTIC FLOORING - TYPE #3
RSF-4	RESILIENT ACOUSTIC FLOORING - TYPE #4
PT	PORCELAIN TILE
QT	QUARRY TILE
SC	SEALED CONCRETE
MAT	ENTRY MAT

NOTE:

1. FOR FURTHER INFORMATION, REFER TO SHEET A8.20 FOR ROOM FINISH SCHEDULE AND SHEET A8.21 FOR FINISH MATERIAL SCHEDULE

2. HEALTH AND WELLNESS TO HAVE ANTIMICROBIAL FLOORING

COUNTERTOP FINISH

NOTE: THE FINISH PLAN ONLY IDENTIFIES FINISHES THAT HAVE MULTIPLE COUNTERTOP FINISHES WITHIN ONE ROOM. SEE FINISH SCHEDULE A8.20 FOR COUNTERTOP FINISH TYPES

QZ-1	QUARTZ COUNTERTOP - TYPE 1
QZ-2	QUARTZ COUNTERTOP - TYPE 2
PL-3	PLASTIC LAMINATE COUNTERTOP - TYPE 3
S	SOLID SURFACE COUNTERTOP

ACCENT PAINT COLOR

NOTE: WALL PAINT COLOR IS P-1 UNLESS OTHERWISE NOTED ON PLAN. SEE FINISH SCHEDULE A8.20.

P-1	ACCENT PAINT COLOR TYPE 1
P-2	ACCENT PAINT COLOR TYPE 2
P-3	ACCENT PAINT COLOR TYPE 3

VINYL WALL GRAPHIC

NOTE: ELECTRONIC FILE OF GRAPHIC IMAGE TO BE PROVIDED BY ARCHITECT.

VWG-1	VINYL WALL GRAPHIC - DESIGN #1
VWG-2	VINYL WALL GRAPHIC - DESIGN #2

HPI architecture
www.hpiarchitecture.com
115 22nd street
Newport Beach, CA 92663
o: 949. 675. 6442

CONSULTANTS

SEALS / APPROVALS

IDENTIFICATION STAMP
DIV. OF THE STATE ARCHITECT
FILE: 30-C2
A# 04 - 116810
AC PB FLS — SS TY
DATE AUG 31 2018

PROJECT TITLE
JOHNSON STUDENT CENTER
INCREMENT 2
1530 W 17TH ST SANTA ANA CA 92706

RANCHO SANTIAGO Community College District

SUBMITTALS

#	DATE	DESCRIPTION
	08/13/2018	DSA FINAL SUBMITTAL

PROJECT IDENTIFICATION Project Number

THESE DRAWINGS ORIGINALLY CREATED IN AUTODESK REVIT V. 2016 U.O.N.

THE ORIGINAL SIZE OF THIS SHEET IS 30" X 42".

DRAWN BY MS, AMF

CHECKED BY LP

THESE DRAWINGS AND SPECIFICATIONS ARE THE PROPERTY AND COPYRIGHT OF THE ARCHITECT AND SHALL NOT BE USED ON ANY OTHER PROJECT OR LOCATIONS EXCEPT AS DESCRIBED ON THE DRAWINGS, WITHOUT WRITTEN AGREEMENT WITH THE ARCHITECT.

© HILL PARTNERSHIP INC. 2017

SHEET TITLE
FIRST FLOOR FINISH PLAN

SHEET NUMBER
A8.10

DSA SUBMITTAL

8/7/2018 7:09:43 PM C:\Users\AMolpus\Documents\SSCCD_SAC_Johnson Center_Central_R16_Azeadline.rvt

FLOORING FINISH LEGEND

CPT-1	CARPET - TYPE #1
CPT-2	CARPET - TYPE #2
RSF-1	RESILIENT FLOORING - TYPE #1
RSF-2	RESILIENT FLOORING - TYPE #2
RSF-3	RESILIENT ACOUSTIC FLOORING - TYPE #3
RSF-4	RESILIENT ACOUSTIC FLOORING - TYPE #4
PT	PORCELAIN TILE
QT	QUARRY TILE
SC	SEALED CONCRETE
MAT	ENTRY MAT

NOTE:

1. FOR FURTHER INFORMATION, REFER TO SHEET A8.20 FOR ROOM FINISH SCHEDULE AND SHEET A8.21 FOR FINISH MATERIAL SCHEDULE

2. HEALTH AND WELLNESS TO HAVE ANTIMICROBIAL FLOORING

COUNTERTOP FINISH

NOTE: THE FINISH PLAN ONLY IDENTIFIES FINISHES THAT HAVE MULTIPLE COUNTERTOP FINISHES WITHIN ONE ROOM. SEE FINISH SCHEDULE A8.20 FOR COUNTERTOP FINISH TYPES

QZ-1	QUARTZ COUNTERTOP - TYPE 1
QZ-2	QUARTZ COUNTERTOP - TYPE 2
PL-3	PLASTIC LAMINATE COUNTERTOP - TYPE 3
S	SOLID SURFACE COUNTERTOP

ACCENT PAINT COLOR

NOTE: WALL PAINT COLOR IS P-1 UNLESS OTHERWISE NOTED ON PLAN. SEE FINISH SCHEDULE A8.20.

P-1	ACCENT PAINT COLOR TYPE 1
P-2	ACCENT PAINT COLOR TYPE 2
P-3	ACCENT PAINT COLOR TYPE 3

VINYL WALL GRAPHIC

NOTE: ELECTRONIC FILE OF GRAPHIC IMAGE TO BE PROVIDED BY ARCHITECT.

VWG-1	VINYL WALL GRAPHIC - DESIGN #1
VWG-2	VINYL WALL GRAPHIC - DESIGN #2

FLOOR FINISH PLAN-SECOND FLOOR SCALE 3/32" = 1'-0" 1

HPI architecture
www.hpiarchitecture.com
115 22nd street
Newport Beach, CA 92663
o: 949. 675. 6442

CONSULTANTS

SEALS / APPROVALS

IDENTIFICATION STAMP
DIV. OF THE STATE ARCHITECT
FILE: 30-C2
A# 04 - 116810
AC PB FLS — SS TJ
DATE AUG 31 2018

PROJECT TITLE
JOHNSON STUDENT CENTER
INCREMENT 2
1530 W 17TH ST SANTA ANA CA 92706

RANCHO SANTIAGO Community College District

SUBMITTALS

#	DATE	DESCRIPTION
	08/13/2018	DSA FINAL SUBMITTAL

PROJECT IDENTIFICATION Project Number

THESE DRAWINGS ORIGINALLY CREATED IN AUTODESK REVIT V. 2016 U.O.N.

THE ORIGINAL SIZE OF THIS SHEET IS 30" X 42".

DRAWN BY MS, AMF

CHECKED BY LP

THESE DRAWINGS AND SPECIFICATIONS ARE THE PROPERTY AND COPYRIGHT OF THE ARCHITECT AND SHALL NOT BE USED ON ANY OTHER PROJECT OR LOCATIONS EXCEPT AS DESCRIBED ON THE DRAWINGS, WITHOUT WRITTEN AGREEMENT WITH THE ARCHITECT.

© HILL PARTNERSHIP INC. 2017

SHEET TITLE
SECOND FLOOR FINISH PLAN

SHEET NUMBER

A8.11

DSA SUBMITTAL

Attachment 3

PRE-BID CLARIFICATION ("PBC") FORM
(ALL questions to be submitted on this form ONLY)

PBC # *(RSCCD USE ONLY)*: 211

PROJECT NAME:	RFP #1819-224 Johnson Student Center at Santa Ana College		
PROJECT NUMBER:	3035	DSA NUMBER:	Demolition, #04-116810 INC 1 and INC 2
EMAIL:	**FacilitiesRFP@rsccd.edu**		

DATE:	10/10/2018		
FROM:	S.Monsen - McCarthy	EMAIL:	SMonsen@McCarthy.com
SPECIFICATION NUMBER:		DRAWING NUMBER:	

REQUESTED CLARIFICATION:

Increment #2 - Please see attached clarification questions regarding RS-1 and RS-2 and where they each apply.

RESPONSE TO CLARIFICATION, **SUBMITTED AS PART OF AN ADDENDUM**:

REFER TO ATTACHED FOR RESPONSE

RESPONSE PROVIDED BY:	Julia D. Jones / hpi	DATE:	10/22/18

Attach additional numbered sheets as necessary; however, only one (1) request shall be contained on each submitted form.

Increment #2 – Sheet A8.21 – provides a spec for RS-2, however a call out for this specific material is not found on the plans. The only indication for where it applies is in the material schedule which states "AT RECEPTION COUNTERS AND SELF SERVICE COMPUTER STATIONS AT LOBBY". Sheet A8.20 Room Finishes schedule only lists RS under the cabinet finish, not RS-1 or RS-2. Clarification is needed as to where each type applies. Please find material plans attached specifying location of RS-1 or RS-2 or RS-2.1.

At the Student Financial Services Counter - 3/A9.95 references detail 2/A9.91 which calls for a backlit translucent resin panel (we are assuming this is RS-2) **AND** detail 3/A9.92 which does not show a backlit panel. Please confirm that the Student Financial Services Counter is to be a backlit translucent resin panel finish and that it is material RS-2. Yes Financial Services Counter to be backlit. Please use detail 2/A9.91. Please disregard reference 3/A9.92 on detail 3/A9.95. See attached Plans.

At the Financial Aid Counter – 14/A9.95 only detail 3/A9.92 is called out. Is RS-2 correct at this location and no backlighting or should this also be a backlit translucent resin panel? Note the Electrical plans currently show a backlight at this location. Yes Financial Aid Counter to be backlit. Please use detail 2/A9.91. Please disregard reference 3/A9.92 on detail 14/A9.95. See attached Plans.

At the East Lobby EOPS Counter – 2/A9.96 only detail 3/A9.92 is called out. Is RS-2 correct at this location and no backlighting or should this also be a backlit translucent resin panel? Note the Electrical plans currently show a backlight at this location. Yes EOPS counter to be backlit. Please use detail 2/A9.91. Please disregard reference 3/A9.92 on detail 14/A9.95. See attached Plans.

At the North Lobby Student ID Station – 22/A9.95 references detail 24/A9.95 which takes you to 5/A9.91. This detail calls out a resin panel finish. Please confirm this is RS-2 without a backlight. Or should this be RS-1? Note detail 5/A9.91 is also called out at the freestanding counter in J200-3 East Lobby at GL F & 8.6. Is this location RS-2 or RS-1? Yes North Lobby Student ID counter to not be backlit. Please use RS-2.1 material, See attached Plans.

If RS-1 is selected note this product is ½" thick however in detail 5/A9.91 the product appears to be thinner and adhered to the drywall, not attached using stainless steel post/cap. Please clarify the panel attachment required in this detail. Please use updated details attached.

Also please clarify which product RS-1 or RS-2 is required at the column wrap locations and walls throughout. Please see diagrams attached.

8/9/2018 7:09:34 PM C:\Users\AMatpour\Documents\SCCD_SAC_Johnson Center_Central_R16_Asedline.rvt

RS-1

RS-2.1
Lumiform Silver Spun, Back
Finish-Matte Dove Opaque

FLOOR FINISH PLAN-FIRST FLOOR SCALE 3/32" = 1'-0" 1

FLOORING FINISH LEGEND

CPT-1	CARPET - TYPE #1
CPT-2	CARPET - TYPE #2
RSF-1	RESILIENT FLOORING - TYPE #1
RSF-2	RESILIENT FLOORING - TYPE #2
RSF-3	RESILIENT ACOUSTIC FLOORING - TYPE #3
RSF-4	RESILIENT ACOUSTIC FLOORING - TYPE #4
PT	PORCELAIN TILE
QT	QUARRY TILE
SC	SEALED CONCRETE
MAT	ENTRY MAT

NOTE:

1. FOR FURTHER INFORMATION, REFER TO SHEET A8.20 FOR ROOM FINISH SCHEDULE AND SHEET A8.21 FOR FINISH MATERIAL SCHEDULE

2. HEALTH AND WELLNESS TO HAVE ANTIMICROBIAL FLOORING

COUNTERTOP FINISH

NOTE: THE FINISH PLAN ONLY IDENTIFIES FINISHES THAT HAVE MULTIPLE COUNTERTOP FINISHES WITHIN ONE ROOM. SEE FINISH SCHEDULE A8.20 FOR COUNTERTOP FINISH TYPES

QZ-1	QUARTZ COUNTERTOP - TYPE 1
QZ-2	QUARTZ COUNTERTOP - TYPE 2
PL-3	PLASTIC LAMINATE COUNTERTOP - TYPE 3
S	SOLID SURFACE COUNTERTOP

ACCENT PAINT COLOR

NOTE: WALL PAINT COLOR IS P-1 UNLESS OTHERWISE NOTED ON PLAN. SEE FINISH SCHEDULE A8.20.

P-1	ACCENT PAINT COLOR TYPE 1
P-2	ACCENT PAINT COLOR TYPE 2
P-3	ACCENT PAINT COLOR TYPE 3

VINYL WALL GRAPHIC

NOTE: ELECTRONIC FILE OF GRAPHIC IMAGE TO BE PROVIDED BY ARCHITECT.

VWG-1	VINYL WALL GRAPHIC - DESIGN #1
VWG-2	VINYL WALL GRAPHIC - DESIGN #2

HPI architecture
www.hpiarchitecture.com
115 22nd street
Newport Beach, CA 92663
o: 949. 675. 6442

CONSULTANTS

SEALS / APPROVALS

IDENTIFICATION STAMP
DIV. OF THE STATE ARCHITECT
FILE: 30-C2
A# 04 - 116810
AC PB FLS — SS TY
DATE AUG 31 2018

PROJECT TITLE
JOHNSON STUDENT CENTER
INCREMENT 2
1530 W 17TH ST SANTA ANA CA 92706

RANCHO SANTIAGO Community College District

SUBMITTALS

#	DATE	DESCRIPTION
	08/13/2018	DSA FINAL SUBMITTAL

PROJECT IDENTIFICATION Project Number

THESE DRAWINGS ORIGINALLY CREATED IN AUTODESK REVIT V. 2016 U.O.N.

THE ORIGINAL SIZE OF THIS SHEET IS 30" X 42".

DRAWN BY MS, AMF

CHECKED BY LP

THESE DRAWINGS AND SPECIFICATIONS ARE THE PROPERTY AND COPYRIGHT OF THE ARCHITECT AND SHALL NOT BE USED ON ANY OTHER PROJECT OR LOCATIONS EXCEPT AS DESCRIBED ON THE DRAWINGS, WITHOUT WRITTEN AGREEMENT WITH THE ARCHITECT.

© HILL PARTNERSHIP INC. 2017

SHEET TITLE
FIRST FLOOR FINISH PLAN

SHEET NUMBER
A8.10

DSA SUBMITTAL

8/7/2018 7:09:43 PM C:\Users\AMolpus\Documents\SSCCD_SAC_Johnson Center_Central_R16_Azeadline.rvt

FLOORING FINISH LEGEND

CPT-1	CARPET - TYPE #1
CPT-2	CARPET - TYPE #2
RSF-1	RESILIENT FLOORING - TYPE #1
RSF-2	RESILIENT FLOORING - TYPE #2
RSF-3	RESILIENT ACOUSTIC FLOORING - TYPE #3
RSF-4	RESILIENT ACOUSTIC FLOORING - TYPE #4
PT	PORCELAIN TILE
QT	QUARRY TILE
SC	SEALED CONCRETE
MAT	ENTRY MAT

NOTE:

1. FOR FURTHER INFORMATION, REFER TO SHEET A8.20 FOR ROOM FINISH SCHEDULE AND SHEET A8.21 FOR FINISH MATERIAL SCHEDULE

2. HEALTH AND WELLNESS TO HAVE ANTIMICROBIAL FLOORING

COUNTERTOP FINISH

NOTE: THE FINISH PLAN ONLY IDENTIFIES FINISHES THAT HAVE MULTIPLE COUNTERTOP FINISHES WITHIN ONE ROOM. SEE FINISH SCHEDULE A8.20 FOR COUNTERTOP FINISH TYPES

QZ-1	QUARTZ COUNTERTOP - TYPE 1
QZ-2	QUARTZ COUNTERTOP - TYPE 2
PL-3	PLASTIC LAMINATE COUNTERTOP - TYPE 3
S	SOLID SURFACE COUNTERTOP

ACCENT PAINT COLOR

NOTE: WALL PAINT COLOR IS P-1 UNLESS OTHERWISE NOTED ON PLAN. SEE FINISH SCHEDULE A8.20.

P-1	ACCENT PAINT COLOR TYPE 1
P-2	ACCENT PAINT COLOR TYPE 2
P-3	ACCENT PAINT COLOR TYPE 3

VINYL WALL GRAPHIC

NOTE: ELECTRONIC FILE OF GRAPHIC IMAGE TO BE PROVIDED BY ARCHITECT.

VWG-1	VINYL WALL GRAPHIC - DESIGN #1
VWG-2	VINYL WALL GRAPHIC - DESIGN #2

FLOOR FINISH PLAN-SECOND FLOOR SCALE 3/32" = 1'-0" 1

HPI architecture
www.hpiarchitecture.com
115 22nd street
Newport Beach, CA 92663
o: 949. 675. 6442

CONSULTANTS

SEALS / APPROVALS

IDENTIFICATION STAMP
DIV. OF THE STATE ARCHITECT
FILE: 30-C2
A# 04 - 116810
AC PB FLS — SS TJ
DATE AUG 31 2018

PROJECT TITLE
JOHNSON STUDENT CENTER
INCREMENT 2
1530 W 17TH ST SANTA ANA CA 92706

RANCHO SANTIAGO Community College District

SUBMITTALS

#	DATE	DESCRIPTION
	08/13/2018	DSA FINAL SUBMITTAL

PROJECT IDENTIFICATION Project Number

THESE DRAWINGS ORIGINALLY CREATED IN AUTODESK REVIT V. 2016 U.O.N.

THE ORIGINAL SIZE OF THIS SHEET IS 30" X 42".

DRAWN BY MS, AMF

CHECKED BY LP

THESE DRAWINGS AND SPECIFICATIONS ARE THE PROPERTY AND COPYRIGHT OF THE ARCHITECT AND SHALL NOT BE USED ON ANY OTHER PROJECT OR LOCATIONS EXCEPT AS DESCRIBED ON THE DRAWINGS, WITHOUT WRITTEN AGREEMENT WITH THE ARCHITECT.

© HILL PARTNERSHIP INC. 2017

SHEET TITLE
SECOND FLOOR FINISH PLAN

SHEET NUMBER

A8.11

DSA SUBMITTAL

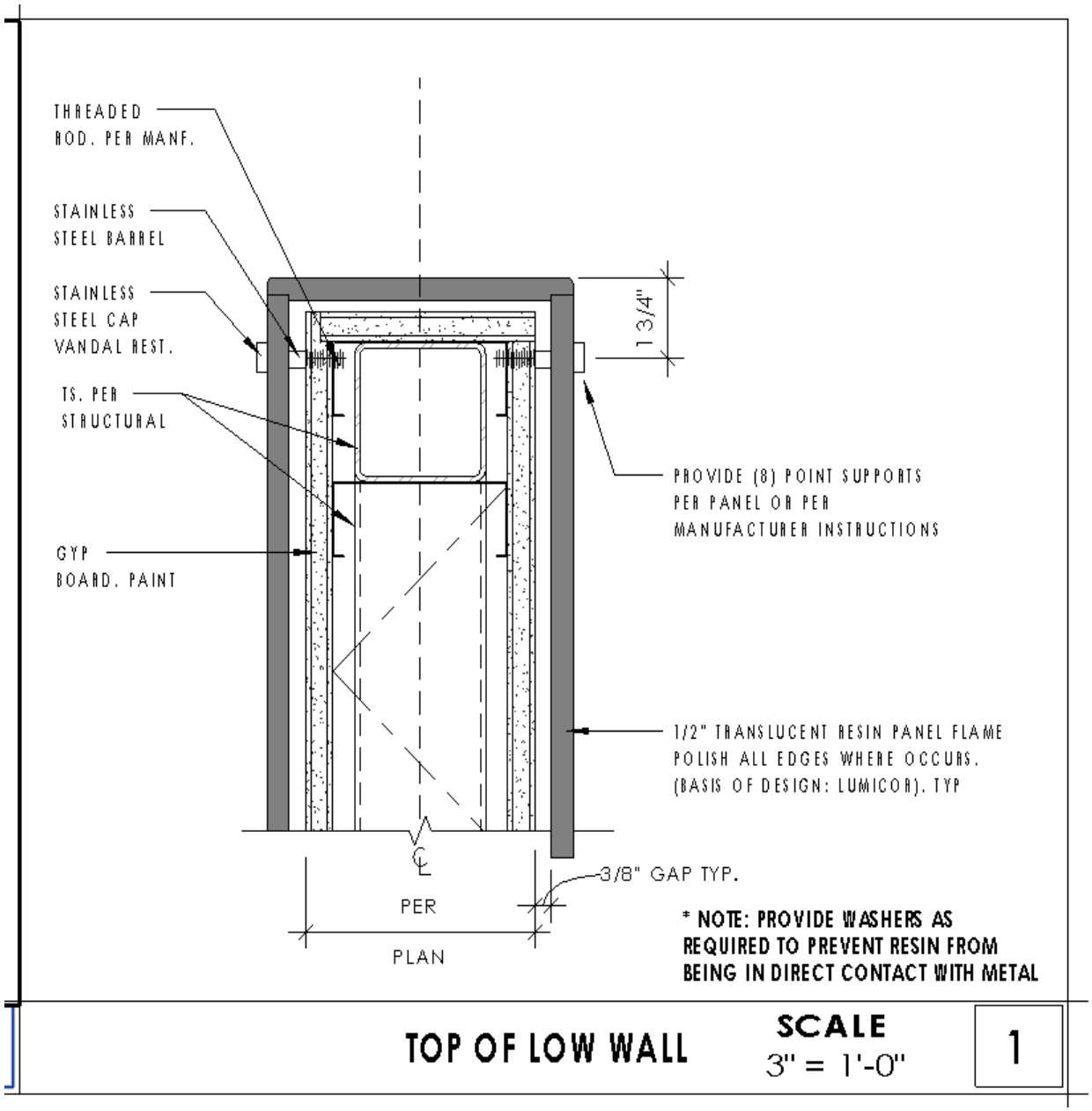

TOP OF LOW WALL SCALE 3" = 1'-0" 1

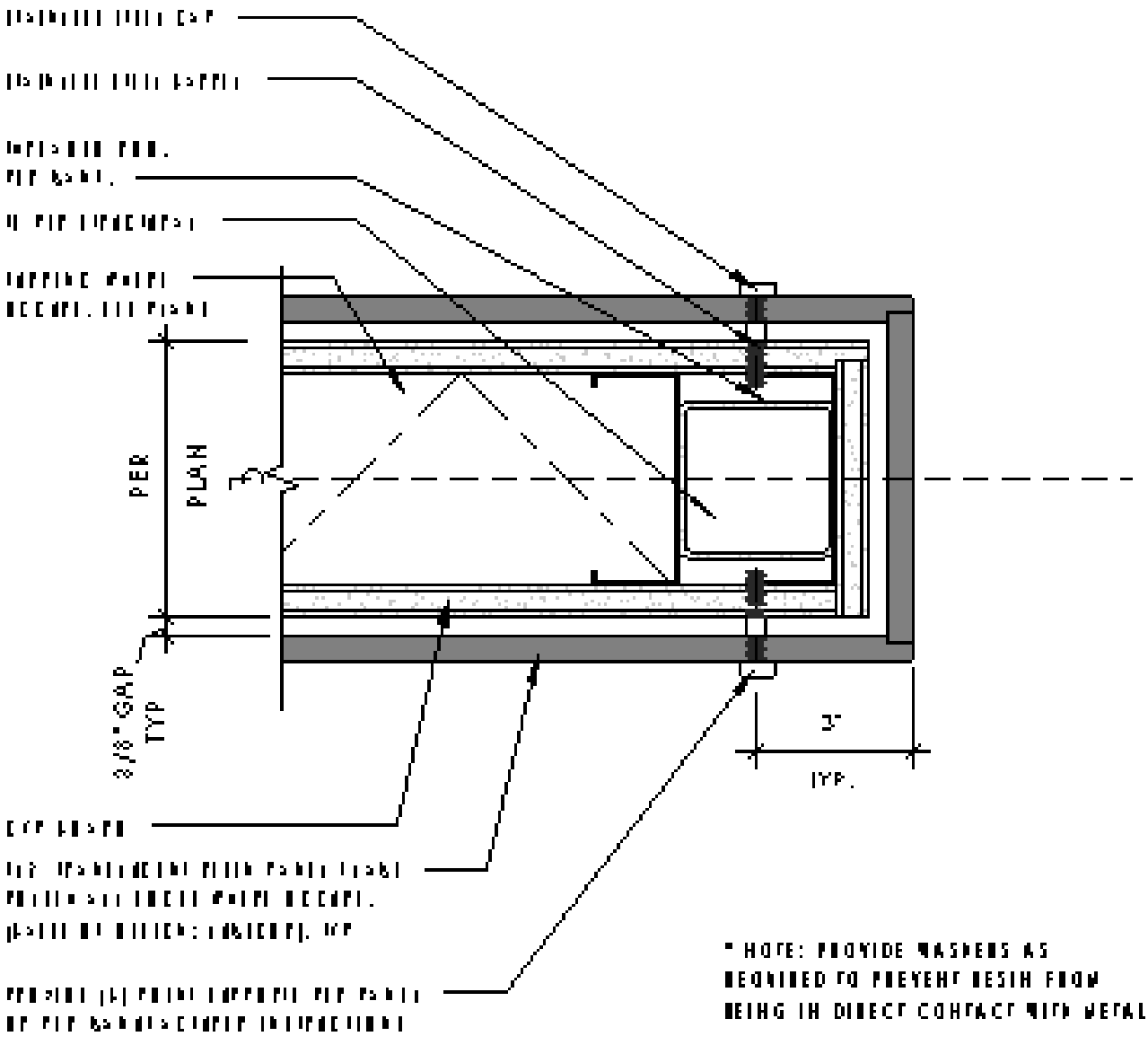

SIDE OF LOW WALL

SCALE 3" = 1'-0"

6

MASTER PBC Log

PROJECT: Rancho Santiago Community College District
Santa Ana College - Johnson Student Center Building Demolition, Increment 1 and 2
DSA #04-116810-1
DSA #04-116810-2

PBC #	GC	Addendum	Package(s)	TRADE/CATEGORY	SHEET / SECTION	DETAIL / PAGE	QUESTION / COMMENT	ISSUED TO DESIGN TEAM	RESPONSE TO COMMENT	Addendum Date	Consultant
1	MCC1	2	Increment 2	Campus Store Design	CS2.02, CS6.10		Sheet CS2.02 Equipment Schedules lists Mannequins and Public Guidance and references Sheet CS6.10, however no quantity is provided in the QTY column. Sheet CS6.10 provides a specification for the Mannequins and the Public guidance products. Please confirm that these items are to be provided as part of the GMP.	9/13/18	REFER TO SHEET CS6.10, LISTED AS PHM-1, PHF-1 AND PHF-2 FOR QUANTITIES TO PROVIDE.	9/17/2018	NBCI
2	MCC2	2	Building Demo	Civil	C1.00		Bldg. Demo - Sheet C1.00, Sewer Demolition Notes 1 - Confirm that the bidders are to assume that connection to BLDG L has been established and are to exclude any work to "reroute existing sewer as required".	9/13/18	ALL BUILDINGS TO THE EAST, INCLUDING BLDG L HAVE BEEN ESTABLISHED (connected). THEREFORE REMOVE/DEMO EXISTING SEWER WITHIN BOUNDARY.	9/17/2018	CM
3	MCC3	2	Building Demo	Civil	C1.00		Bldg. Demo - Sheet C1.00, Grading Notes 1 - Confirm the Soils Engineer has approved the existing base rock under concrete can be re-used or not.	9/13/18	REMOVE/STRIKE REFERENCE OF "BASE ROCK UNDER CONCRETE CAN BE REUSED AS A GENERAL FILL IF APPROVED BY SOILS ENGINEER". REFER TO INCREMENT 2 FOR DESIGN OF ENGINEERED FILL AND GEO-TECH REPORT DATED NOVEMBER 21, 2016.	9/17/2018	GeoTech
4	MCC4	2	Building Demo	Civil/Arch	C1.00, A0.01, A0.02		Bldg. Demo - Sheet C1.00, Grading Notes 1 - The bidders are to assume 4-inch of concrete over 6-inch base, however Sheets A0.01 & A0.02 Legend - Demolition Site Plan calls for the upper "gray" shaded areas to assume 6-inch of concrete over 6-inch base. Confirm which thickness supersede the other.	9/13/18	REFER TO A0.01 and A0.02 AND ASSUME 6" OVER 6". REVISE SHEET C1.00, GRADING NOTE 1 TO ASSUME 6" OF CONC...	9/17/2018	H&F/hpi
5	MCC5	2	Building Demo	Civil	C1.00		Bldg. Demo - Sheet C1.00, General Note 6 - Confirm that the bidders are to include laying 2-inch thick crushed aggregate base over the entire demolition area, and if so that this base is assumed to be included in the calculations of the final rough grade elevations.	9/13/18	REMOVE GENERAL NOTE 6. THIS WILL NOT BE REQUIRED SINCE ALL 3 PACKAGES WILL BE CONSTRUCTED TOGETHER.	9/17/2018	BKF
6	MCC6	2	Building Demo	Arch/District	A0.01, A0.02		Bldg. Demo - Sheet A0.01 & A0.02, Demolition General Note 6 - Confirm that the bidders are to include salvage of the "cameras, WAPs, and network gear", and if so provide the quantity, types, models, limits, details, specifications, packing expectations, delivery location(s), warranty, and any other information necessary, or possibly delete this note and have the District remove these devices prior to mobilization by the GC, or we suggest including a stipulated allowance for this work.	9/13/18	DISTRICT WILL BE REMOVING/SALVAGING CAMERAS, WAPs AND NETWORK GEAR PRIOR TO MOBILIZATION BY GC.	9/17/2018	hpi/District
7	MCC7	2	Building Demo	Arch/District/Elec	ED1.01		Bldg. Demo - Sheet ED1.01, Demolition Note 7-C - If bidders are to include salvage of any items, please provide a list with quantities to the bidders.	9/13/18	REMOVE DEMOLITION NOTE 7-C IN ITS ENTIRETY. DISTRICT HAS REMOVED ANY/ALL ITEMS.	9/17/2018	District
8	MCC8	2	Building Demo	Elec/District	ED1.01		Bldg. Demo - Sheet ED1.01, "Square" Notes 15 - Confirm that D4 Contractors are subcontracted directly by the owner.	9/13/18	REVISED NOTE TO REMOVE "D4" CONTRACTOR AND TO READ "CONTRACTOR to pull back....". REFER TO ATTACHED REVISED SHEET ED1.01.	9/17/2018	P2s/District
87	MCC9	5	Increment 2	Arch/District/Civil	C1.0D, A0.00D	McCarthy\9-PBC.PDF.pdf	Increment #1 - Sheet C1.0D, Demolition Keynote 5 - The Pile Caps are each listed with a Demo Keynote 5 and a depth "D", however when comparing with Detail 1/A0.00D there are 18 pile caps that do not match, please coordinate and confirm which supersedes the other. see attached marked up sketch.	9/13/18	REFER TO ADDENDUM NO 4, REVISED INCREMENT NO 1, SHEET C1.00-D FOR COORDINATED PILE DEMO DEPTHS WITH ARCHITECTURAL.	10/8/2018	BKF/hpi
10	MCC10	2	Increment 2	Mechanical	Spec 23 05 93		Reference Specification 23 05 93 - Testing, Adjusting and Balancing for HVAC: 1.2,A,6 references vibration tests, however, there are no procedures, requirements addressed in the balance of the specification section. Confirm Vibration Testing is required and, if so, provide test and reporting requirements.	9/13/18	VIBRATION TESTS ARE NOT REQUIRED. REMOVE REFERENCE TO 23 05 93 PART 1, 1.2. A.6	9/17/2018	P2S
9	MCC11	3	Increment 2	Plumbing	13/A6.10, P2.21, P2.22	P2.12, P2.22	Reference drawing A6.10, Detail 13 - Architectural drawing indicates trench drain at second floor, Stair 1, Keynote 221319.A4. Plumbing drawings P2.21 & P2.22 do not indicate a trench drain at this location. Please clarify	9/13/18	REFER TO ATTACHED REVISED PLUMBING SHEETS P2.12 & P2.22 SHOWING THE ADDED TRENCH DRAINS (TD-1) WITH ASSOCIATED PIPING AS PART OF ADDENDUM 3.	9/24/2018	P2S/hpi
11	MCC12	3	Increment 2	Architectural	24&27/G3.11	G3.12	The CMU at the Boiler room is called out to be precision block with the color "Shoreline". The CMU for the Service Yard Site wall is called out to be Split Face, however no color provided. Please provide a color for bidding purposes. Please provide a color and type of CMU for Lunch Shelter. The vehicular directional signage CMU call for CMU-6 however no spec can be found for this. It appears to be drawn as split face per detail 24&27/G3.11. Please confirm and provide the color.	9/14/18	a. SERVICE YARD TO BE SPLIT FACE COLOR "SHORELINE" b. PROVIDE: 8"h CMU, ANGELUS BLOCK - PRECISION "SHORELINE" c. PROVIDE: 8"h CMU, ORCO BLOCK CO/WHITE - SPLITFACE 2-SIDES, MEDIUM WEIGHT BELOW THE SQUARE PRE-CAST CONCRETE BLOCK PILASTER 2" CAP. REFER TO NEW DETAIL SHEET G3.12 FOR ADDITIONAL INFORMATION	9/24/2018	hpi
12	MCC13	3	Increment 2	Architectural	24/G3.11	G3.12	Detail 24/G3.11 calls for a Custom Tile inset flush to the CMU wall. We are assuming this should read Custom "Tile". Please confirm. Please also indicated who will provide this custom tile. If the contractor is to provide please provide details so it can be custom made.	9/14/18	ADDED DETAIL 13&14/G3.12 (NEW SHEET)	9/24/2018	hpi
13	MCC14	3	Increment 2	Architectural	24&27/G3.11	G3.12	Please provide a detailed section view of the aluminum monument sign shown in details 24&27/G3.11	9/14/18	ADDED DETAIL 17/G3.12 (NEW SHEET)	9/24/2018	hpi
14	MCC15	3	increment 2	Architectural	071910, A8.21		Specification Section 071910-2.1B - Concrete Floor Sealer list Scofield, Consolideck LS by Prosoco, Degussa or ChemMasters as acceptable manufacturers for concrete clear sealer. Sheet A8.21 Finish Schedule list Ardex as a manufacturer for Sealed Concrete. Please confirm that Ardex can be used as an "or equal" as they are no listed in the specification (071910-2.1B). Please also confirm Ardex can be added to the list of acceptable patching manufacturers (071910-2.1A).	9/18/18	ARDEX CONCRETE SEALER AND ARDEX PATCHING COMPOUND IS ACCEPTABLE AS AN APPROVED EQUAL.	9/24/2018	hpi
15	MCC16	3	Increment 2	Architectural	A8.30, A8.31		Doors J100-2A & J200-2A are called out as a Type D4 and Door J101-1A is called out as Type D3 on the Door Schedule however no D3 or D4 door is included in the Door Type Legend. Please either revise these doors in the schedule or provide the missing D3 and D4 door type.	9/18/18	REFER TO SHEET A8.41 REFERENCE STOREFRONT SF-3 FOR DOOR J100-2A, SF-7 FOR DOOR J200-2A. FOR DOOR J101-1A TO BE A TYPE B.	9/24/2018	hpi
16	MCC17	3	Increment 2	Architectural	071909, 071920, 096816		Specification Section 071909-3.4C states "Do no allow floor coverings to be installed in areas above 3.0 pounds per ASTM F 1869 and pH levels greater than 10 or floor covering manufacturer's requirements." 1) The flooring specifications (Resilient Tile 096500 & linoleum 096517 call to "Provide barrier as specified in Division 7 Section "Concrete Moisture and Alkalinity Barrier" if test exceed floor covering limits." Since the concrete cannot be tested until it is constructed, we recommend the District include an allowance for concrete moisture and alkalinity barrier to level all bidders. 2) The Sheet Carpeting Specification 096816-1.05B calls for Powerbond Cushion installation which does not require moisture vapor emission rate (MVER) testing nor relative humidity (RH) testing provided that no free liquids are present. Please confirm that the Concrete Moisture and Alkalinity Barrier specification section 071920 does not apply to the carpeted areas.	9/18/18	1) ALLOWANCE FOR CONCRETE MOISTURE AND ALKALINITY BARRIER TO BE $15,000.00 2) REFER TO SPECIFICATION SECTION 096816 PART 1, 1.05.B. IF THERE IS FREE LIQUIDS AND/OR MOISTURE STAINED CONCRETE OBSERVED A MVER AND RH TESTING MUST BE DONE.	9/24/2018	hpi
17	MCC18	3	Building Demo	Civil	C1.00		Building Demo - Sheet C1.00, Grading Note 2 refers to the City of Cerritos. Please confirm this should be Santa Ana instead.	9/18/18	CONFIRMED TO READ CITY OF "SANTA ANA" . REFER TO REVISED SHEET C1.00	9/24/2018	H&F
18	MCC19	3	Building Demo	Civil	C1.00		Building Demo - Sheet C1.00, Detail 1 - There are several utility structures & piping that are listed as "Protect in Place", however these will need to be removed. Please revise this drawing to show which specific utility items are to be protected in place & which are to be removed, especially those that are in the zone of the building over excavation.	9/18/18	REVISED SHEET C1.00 DETAIL 1 TO SHOW ALL WET/DRY UTILITIES AND ALL ASSOCIATED ACCESSORIES TO BE REMOVED IN THEIR ENTIRETY AND CUT BACK/CAPPED IF NECESSARY AT BOUNDARY OF CONSTRUCTION.	9/24/2018	H&F

MASTER PBC Log

PROJECT: Rancho Santiago Community College District
Santa Ana College - Johnson Student Center Building Demolition, Increment 1 and 2
DSA #04-116810-1
DSA #04-116810-2

PBC #	GC	Addendum	Package(s)	TRADE/CATEGORY	SHEET / SECTION	DETAIL / PAGE	QUESTION / COMMENT	ISSUED TO DESIGN TEAM	RESPONSE TO COMMENT	Addendum Date	Consultant
19	MCC20	3	Building Demo	Civil	C2.00, C2.0-D, C6.0		Building Demo/Increment 1 - Sheets C2.00, C2.0-D, Please confirm that these Erosion Control & Grading Plans are assumed to be superseded by Increment 2, Sheet C6.0	9/18/18	REMOVE SHEET C2.00 IN ITS ENTIRETY FROM THE BUILDING DEMOLITION PACKAGE. REFER TO INCREMENT 1 AND 2 FOR EROSION CONTROL & GRADING PLANS	9/24/2018	H&F/BkF
20	MCC29	3	Increment 2	Civil	033010, 321313		Increment #2 - Specification Section 033010 par., 1.2-E calls for a 3x3x8-inch sample of each site wall finish for review, and Section 321313 par., 1.2-C calls for a 4x4 job site sample of each paving finish. There are numerous existing site walls and new site paving recently installed on the campus, could these "in place" samples serve as a the representative samples of finish types to match in lieu of a new mock-up, thus saving the District money.	9/18/18	PROVIDE MOCK-UPS PER SPECIFICATION SECTIONS (DSA APPROVED CONTRACT DOCUMENTS)	9/24/2018	hpi/District
21	MCC46	3	Increment 2	Landscape	L5.50		Increment 32 - Sheet L5.50, Mock-Up requirements - Confirm that the bidders are to provide these mock-ups since the existing site-work & site walls that were recently installed could serve as representative samples of finish types to match, thus saving the District money.	9/18/18	PROVIDE MOCK-UPS PER SPECIFICATION SECTIONS (DSA APPROVED CONTRACT DOCUMENTS)	9/24/2018	RLA/District
22	MCC51	3	Increment 2	Arch/Structural	A1.03, S5.11, 053123	21	Increment #2 - Sheet A1.03, Detail 21 - At the right, there is a callout for 053123.A2 and handwritten is "Deck D5 Type per 1/S5.11. Detail 1/S5.11 calls out D5 as Deep-Dek to be "(18 GA)", however Section 053123 par., 2.2-A-1 calls for this corrugated deck to be "20 Ga. or greater as determined by design". Please confirm that the bid is to be based upon 18 GA thick decking per the deck schedule on S5.11	9/18/18	Confirmed, provide D5 deck per detail 1/S5.11 (18GA).	9/24/2018	MHP/hpi
23	MCC52	3	Increment 2	Structural	S2.50	6/S5.17	Increment #2 - Sheet S2.50, Detail A - The west lunch shelter is shown with an 18" concrete mat foundation. Detail 16/S4.11 does not show a mat foundation, however Detail 6/S5.17 does. Please confirm that Detail 6/S5.17 is the correct typical detail for these walls. Please also provide the TOF elevator for this Mat Foundation as well as slab edge details at the CMU walls (thickened edge?) and slab edge details at the door openings (transition to site concrete?)	9/18/18	DETAIL 6/S5.17 SHOWS THE CORRECT DETAILING FOR THE MAT FOUNDATION. MAT FOUNDATOIN TOF IS PER PLAN REF NOTE DIRECTING TO S2.11 - FOUNDATION PLAN NOTES / NOTE 8. SLAB EDGE PER PLAN REF DETAIL 16/S4.11 AT CMU WALL. PROVIDE DOWELING FOR SLAB EDGE AT OPENING TO MAT FOUNDATION SIMLAR TO DETAIL 1/S4.11.	9/24/2011	MHP
24	MCC53	3	Increment 2	Structural	SS1.02.1		Increment #2 - Sheet SS1.02.1 - Rear elevation, The reference call out to Detail F/A1.03 for the Shade footing should be Detail A/SS1.03 instead.	9/18/18	Sheet SS1.02.1 - Rear Elevation - The reference call out Detail F/A1.03 for the shade footing should be Detail F/SS1.03	9/24/2018	MHP
25	MCC55	3	Increment 2	Electrical	E0.03		Increment #2 - Sheet E0.03, Exterior Fixtures S2 - Option 1 lists the model Ligman-FS-UEU-20286, however a search of the Ligman Lighting web site does not have this model, although there are some similar models which are #20281 thru #20286 is in production, and if not, provide the model that should be selected for this project.	9/18/18	Model UEU-20286 does exist and is on their website. Please see attached cut sheet downloaded from their website.	9/24/2018	P2s
26	MCC56	3	Increment 2	Architectural	A7.05, 055100, 055213, 057300	19/A9.71	Increment #2 - Sheet A7.05, Detail 4 - Keynote 055100.A9 calls for a 12" HIGH, 1 1/2" dia. Stainless Steel Pipe Rail and then it refers to detail 19/A9.71 which shows a much different guardrail condition. Please provide correct detail for this 12" high pipe rail with mounting details. Also Specialization section 055100 is for assembled steel stairs, stainless steel pipe rail. Please review and advise which specification section applies to this pipe rail (055213 or 057300 maybe?)	9/19/18	DETAIL REFERENCE IS 3/A9.72. KEYNOTE TO READ 055213.A9. SPECIFICATION FOR PIPE AND TUBE RAILING, INCLUDING SS RAILING USE 055213 PIPE AND TUBE RAILINGS	9/24/2018	hpi
27	MCC57	3	Increment 2	Architectural	A7.21, 055100	8	Increment #2 - Sheet A7.21, detail 8 - Keynote 055100.A8 calls for 1 1/2" dia Stainless Steel Pipe Rail. There is no elevation provided for this side of the room. Please provide details to clarify the height, length and mounting requirements. Also in Spec 055100 the correct spec to be used for this item.	9/19/18	DETAIL REFERENCE IS 3/A9.72. KEYNOTE TO READ 055213.A8. SPECIFICATION FOR PIPE AND TUBE RAILING, INCLUDING SS RAILING USE 055213 PIPE AND TUBE RAILINGS. PROVIDE LENGTH OF 19'-0" FROM CENTERLINE 2, RUNNING SOUTH	9/24/2018	hpi
28	MCC58	3	Increment 2	Architectural	A7.52	15/A9.71, 26&27/A9.71	Increment #2 - Sheet A7.52, Keynote 057300.A1 calls for Ornamental Metal Guardrail - Stainless Steel Top Rail & Post, Painted infill panel at the 2nd floor balcony. Detail 15/A9.71 is called out for this guardrail. This detail references details 26&27/A9.71. 1) These details call out a 1" thick post, but do not call out a stainless steel post. This should be corrected. 2) These details refer to drawings 20/S5.03 for post and stiffener plate size and connection. Sheet S5.03 does not exist. Please provide missing detail/sheet or correct this call out.	9/19/18	1) DETAILS 26/A9.71 NOTE REFERENCING 1" THICK STEEL POST TO READ "1" THICK STEEL POST STAINLESS STEEL". 2) DETAILS 26&27/A9.71 NOTE REVISE TO READ "...STIFFENER PLATE SIZE AND CONNECTION SEE 11/S5.13". 1) DETAIL 27/A9.71 NOTE REFERENCING 1" THICK STEEL POST TO READ "1" THICK STEEL POST STAINLESS STEEL". REMOVE LEADER OF SAME NOTE THAT IS POINTING TO STRUCTURAL STIFFENER.	9/24/2018	hpi
29	MCC63	3	Increment 1 & 2	Architectural	ALL		Increment 1 & @ drawings have been provided in scanned format to bidders with handwritten notes. Is it possible to have a clean copy provided to bidders with handwritten notes incorporated into the test so that drawings are searchable.	9/20/18	THESE ARE DSA APPROVED DOCUMENTS, SO THEY WILL NOT BE REISSUED WITH TEXT AS REQUESTED.	9/24/2018	hpi
30	MCC69	3	Increment 2	Architectural	A8.20		Increment #2 - Please confirm that the room finish schedule on A8.20 takes precedence over the floor plans at conflicting locations. For example, Lounge room J208-4 shows RSF-4 flooring in the room finish schedule and RSF-2 on floor plan A8.11.	9/20/18	CONFIRMED. ROOM FINISH SCHEDULE ON A8.20 TAKES PRECEDENCE OVER FINISH FLOOR PLANS.	9/24/2018	hpi
31	MCC70	3	Increment 2	Architectural	A8.11		Increment #2 - the floor plan on A8.11 shows Stair 2 labeled with RST-1 landings and treads, however RST-1 is not found in the flooring legend. Should this call out be revised to RSF-1? Please clarify	9/20/18	YES. THIS SHOULD BE REVISED TO RSF-1	9/24/2018	hpi
32	MCC71	3	Increment 2	Architectural	A8.20		Increment #2 - Gender Neutral Restrooms J110-10, J110-15 & J110-18 show the use of coved tile base in elevations and details 16, 21, 27 & 28 on A7.02. The room finish schedule on A8.20 calls for RSB-2 base. Please clarify what base is required in these restrooms.	9/20/18	THE BASE THAT SHOULD BE USED IN ROOM J110-10, J110-15 AND J110-18 SHOULD BE THE RSB-2 (FORBO-INTERGRAL COVE BASE).	9/24/2018	hpi
33	MCC72	3	Increment 2	Architectural	A8.20		Increment #2 - Room finish Schedule A8.20 contains comment "Gyp-6 behind tile" for Gender Neutral restrooms J110-10, J110-15 and J110-18. No tile is shown in the finish schedule (FRP and Green board is call for). Please confirm that there is no tile in these three restrooms, and remove the comment stating Gyp 6.	9/20/18	CONFIRMED. THERE IS NO TILE IN THESE THREE ROOMS	9/24/2018	hpi
34	MCC73	3	Increment 2	Architectural	101123		Increment #2 - Specification Section 101123 par., 2.2-A.4 calls for "Series 5 by Claridge" and the Panel thickness is listed as 1 inch, however in a review of the Claridge website Series 5 lists the "O.A. panel thickness at approx. 1/2 inch". Please review and advise.	9/20/18	TACKBOARD: CLARIDGE SERIES 5 IS CORRECT PRODUCT, 1/2" CONFIRMED WITH 5/8" WIDE PERIMETER TRIM. SPECIFICATION SECTION PAR., 2.2-A.4 TO READ Panel Thickness: 1/2"	9/24/2018	hpi
35	MCC74	3	Increment 2	Architectural	101123		Increment #2 - Specification Section 101123 par., 2.3-A, B, C, D - These paragraphs are the exact same as in Section 101116 Markerboards, and appear to be specifications for the fabrication of Markerboards instead of Tackboards. Please review and correct as necessary.	9/20/18	REMOVE SPECIFICATION SECTION 101123 PAR., 2.3-B AND PAR., 2.4-A.	9/24/2018	hpi
36	MCC76	3	Increment 2	Architectural	A6.01	3	Increment #2 - Sheet A6.01, detail 3 - On the east wall of J221 Custodial is a callout for keynote 102813.B1 which is for a Bobrick B-29744, however Detail 25/A6.01 calls for Keynote 102813.A1 which is for a Bobrick B-39747 (or B-3974) instead. Please confirm which is correct	9/20/18	KEYNOTE ON 3/A6.01 TO READ 102813.A1	9/24/2018	hpi

MASTER PBC Log

PROJECT: Rancho Santiago Community College District
Santa Ana College - Johnson Student Center Building Demolition, Increment 1 and 2
DSA #04-116810-1
DSA #04-116810-2

PBC #	GC	Addendum	Package(s)	TRADE/CATEGORY	SHEET / SECTION	DETAIL / PAGE	QUESTION / COMMENT	ISSUED TO DESIGN TEAM	RESPONSE TO COMMENT	Addendum Date	Consultant
37	MCC77	3	Increment 2	Architectural	A7.19		Increment #2 - Sheet A7.19, keynote 101123.A3, This keynote calls out an Acoustic Tackboards, however section 101123 does not specify an "acoustic tackboard" product. Please provide the specifications, mfr., product, details for this item of work.	9/20/18	ADD MANUFACTURER TO SPECIFICATION SECTION 101123 PAR., 2, 2.1-A ACOUSTIC TACKBOARD - BASIS OF DESIGN: ACOUSTICAL SOLUTIONS (ALPHASORB). ADD PRODUCT TO SPECIFICATION SECTION 101123 PAR., 2, 2.2-B Product: ALPHASORB BY ACOUSTICAL SOLUTIONS OR EQUAL: Sizes: up to 4' x 8' (nominal) Thickness: 7/8" (3/4" Micore + 1/8" Fiberglass) Tolerance: +/- 1/8" Core: 24 lb. per cubic foot mineral fiber core + 1/8" fiberglass Intended Use: Interior, sound absorption Fabric Finish: Guilford of Maine FR701 Style 2100 (other fabrics available as specified) Fire Rating: Class 1 or A per ASTM E84 Edge Detail: Square only Mounting options: nails and construction adhesive (provided by installer) NRC: 7/8" (0.60). ALUMINUM FRAME, REFER TO SPECIFICATION SECTION 101123 PAR., 2, 2.3-A	9/24/2018	hpi
38	MCC75	4	Increment 2	Architectural	102113		Increment #2 - Specification Section 102113 par., 2.3-A.1. Please provide a basis of bid color for the toilet partition HDPE panels.	9/20/18	THE COLOR OF THE TOILET PARTITIONS ARE TO BE NICKEL WITH A HAMMERED FINISH FROM SCRANTON HINY HIDERS	10/1/2018	hpi
39	MCC91	4	Increment 2	Architectural	A8.10		Increment #2 - The first floor finish plan Sheet A8.10 appears to show Elevators 1 & 2 with sealed concrete (SC) however no flooring type is specifically called out per the finish legend. Please confirm the desired floor finish inside the elevator is Sealed Concrete. If not provide what type of flooring should be provided in the elevators.	9/24/18	NO - ELEVATORS 1 & 2 WILL BE RSF-1	10/1/2018	hpi
40	MCC21	4	Building Demo	Architectural	A0.02, C2.0, C3.0		Building Demo/Increment 2 - Sheet A0.02, Detail #10 - at the upper-right is a callout for 4 bollards at an existing Fire Hydrant. Please confirm that these bollards are not required since they are part of the Building Demo drawings & are not shown on the more current Increment 2 drawings. If required, provide a callout on the Increment 2 drawings along with a detail reference.	9/18/18	TEMPORARY PROTECTION WILL BE REQUIRED FOR THIS EXISTING FIRE HYRDRANT DURING DEMOLITION. THIS TEMPORARY PROTECTION WILL BE REQUIRED TO BE REMOVED PRIOR TO NEW SITE WORK. HPI SUGGESTS PROVIDING THESE 4 TEMPORARY SURFACE MOUNT BOLLARDS TO PROTECT THE EXISTING FIRE HYDRANT.	10/1/2018	hpi
41	MCC37	4	Increment 2	Civil	C2.1		Increment #2 - Sheet C2.1, Demo Keynotes 17 - Please confirm that the bidders are to include removal of the Emergency Call Box even though this note indicated "by others".	9/18/18	THE CONTRACTOR IS TO REMOVE THE EMERGENCY CALL BOX AND DELIIVER TO THE DISTRICT.	10/1/2018	District
42	MCC79	4	Increment 2	Mechanical/Structural	M2.11, M2.14, S7.20		Increment #2 - Keynote 3/M2.11 and 1/M2.14 state "Provide pipe anchor, See 2/S7.20 does not provide a pipe anchor detail. Please provide a detail for the pipe anchors and also correct the keynotes.	9/24/18	THE NOTE REFERS TO THE CORRECT STRUCTURAL DETAIL. ALL PIPE SHALL BE ANCHORED AS INDICATED IN 2/S7.20	10/1/2018	P2s/MHP
43	MCC25	4	Increment 2	Civil	312333		Increment #2 - Specification section 312333 par., 3.6-B refers to Section 017400, however this specification section was not provided in the bid documents. Please either delete this reference or provide this missing specification section.	9/18/18	REVISED REFER TO SPECIFICATION SECTION 017419	10/1/2018	
44	MCC26	4	Increment 2	Landscape	320523		Increment #2 - Specification Section 320523 par., 2.11-A refers to Section 321300 Rigid Paving, however this section was not provided. Please remove this reference or provide the missing specification section.	9/18/18	SECTION 321300 REPLACED WITH SPECIFICATION SECTION 321313. REFER TO ATTACHED.	10/1/2018	
45	MCC27	4	Increment 2	Civil	321200		Increment #2 - Specification Section 321200 par., 3.06 refers to Pavement Reinforcing fabric. Please confirm this section does not apply to this project, as none is shown nor called out on the drawings.	9/18/18	CONFIRMED, DOES NOT APPLY. REMOVED FROM SPECIFICATIONS 321200	10/1/2018	
46	MCC35	4	Increment 2	Landscape	334600		Increment #2 - Specification section 334600 par., 1.01-A calls for subdrains are at "walls or foundations", however none were located on the drawings. If required, provide the location for the dubdrains and connections to the main Storm Drainage system.	9/18/18	NOT REQUIRED. WILL BE REMOVED FROM SPECIFICATION	10/1/2018	
47	MCC36	4	Increment 2	Civil	C1.00, C1.0-D, C2.0		Bldg Demo, Increment 1 and Increment #2 - Drawings C2.0, The Limit-of-Work in the lower left corner by the area near the existing Decorative Pavers & the Utility Vault does not match the same area as shown on the Bldg Demolition Set, there appears to be some additional demolition & clearing and relocation of the temporary fencing at that lower-left area of the site. Note that the Increment 1 st appears to match the Increment 2 set at this are. Please confirm which demo drawing is to be followed. Please also note this conflicts wit the sketches provided in Addendum #1 (Bid Alternates A & B). Please update the sketches accordingly if needed.	9/18/18	BUILDING DEMOLITION SET TO BE REVISED AND TO MATCH INC 1 & 2	10/1/2018	
48	MCC37	4	Increment 2	Civil	C2.1		Increment #2 - Sheet C2.1, Demo Keynotes 17 - Please confirm that the bidders are to include removal of the Emergency Call Box even though this note indicated "by others".	9/18/18	THE CONTRACTOR IS TO REMOVE THE EMERGENCY CALL BOX AND DELIIVER TO THE DISTRICT.	10/1/2018	District
49	MCC38	4	Increment 2	Civil	C3.0, C3.1		Increment #2 - Sheets C3.0 & C3.1, Pavement note 5 - Please confirm that the bidders are to include two sets of striping (one temporary & one final). Also, confirm that 2-coats of seal are to be including noting that Section 321200 AC Paving does not specify any Seal Coat product, so if required to be included provide a basis-of-bid for the seal coat system.	9/18/18	CONFIRMED, BIDDERS TO INCLUDE TWO SETS OF STRIPING (TEMPORARY AND FINAL). CONFIRMED, 2-COATS OF SEAL ARE TO BE INCLUDED. CALTRANS SPECIFICATIONS SECTION 37-2 ADDED TO SPECS, PLEASE SEE 2.01-G	10/1/2018	
50	MCC39	4	Increment 2	Civil	C3.0, C3.1		Increment #2 - Sheets C3.0 & C3.1, Horizonal Control keynote 18 Rolled Curb was not located on these sheets. If required, provide the callout & locations for this keynote, or list this note as "not used" on this sheet.	9/18/18	KEYNOTE 18 REVISED TO "NOT USED"	10/1/2018	
51	MCC40	4	Increment 2	Civil	C5.2		Increment #2 - Sheet C5.2 (lower left), The callout for the SDMH (RIM 100.58) does not appear on the Utility Legend nor does it have a detail referenced. Please confirm that this Storm Drain Manhole is to be included & provide a detail for this structure, or confirm that this existing and to be protected in place.	9/18/18	CONFIRMED STORM DRAIN MANHOLE TO BE INCLUDED. DETAIL B PROVIDED ON SHEET C5.2	10/1/2018	
52	MCC41	4	Increment 2	Civil	C5.4		Increment #2 - Sheet C5.4, The new SD pipe is beyond the Limit-of-Work line, please confirm that the bidders are to include cutting & patching of the existing hardscape. Please provide detailed information for this hardscape - thickness, finish, rebar size & spacing, as well as minimum dimensions for the	9/18/18	CONFIRMED, BIDDERS ARE TO INCLUDE CUTTING & PATCHING OF THE EXISTING HARSCAPE. PLEASE UTILIZE THE SAME HARDSCAPE INFORMATION AS THE PROPOSED SIDEWALK FOR THIS PROJECT, AS SHOWN AS THE FIRST ITEM ON THE PAVEMENT LEGEND ON SHEET C3.0.	10/1/2018	

MASTER PBC Log

PROJECT: Rancho Santiago Community College District
Santa Ana College - Johnson Student Center Building Demolition, Increment 1 and 2
DSA #04-116810-1
DSA #04-116810-2

PBC #	GC	Addendum	Package(s)	TRADE/CATEGORY	SHEET / SECTION	DETAIL / PAGE	QUESTION / COMMENT	ISSUED TO DESIGN TEAM	RESPONSE TO COMMENT	Addendum Date	Consultant
53	MCC106	4	Increment 2	Low Voltage/District	LV1.11, A2.11		Increment #2 - Note 1/LV1.11 calls for the ATM machine to be OFOI while detail 2/A5.11 calls for the ATM machine to be OFCI. Please clarify if the ATM machine is to be OFOI or OFCI. If it is OFCI then please provide mounting/attachment details. Sheet A2.11 at gridlines M/6.3 there are vending machines called out as OFOCI (Thp.) however 2/A4.01 shows these vending machines as OFCI. please clarify if these vending machines are OFOI or OFCI. if they are OFCI then please provide mounting/attachment details.	9/25/18	VENDING MACHINES AND ATM MACHINES ARE OFOI. REVISE REFERENCE AT 1/A5.11 TO READ "ATM MACHINE O.F.O.I". REFERENCE ON SHEET A2.11 IS CORRECT, REVISE REFERENCE AT 2/A4.01 TO READ "ATM MACHINE O.F.O.I.".	10/1/2018	
54	MCC89	4	Increment 2	Architectural	102226		Increment #2 - Section 102226 par. 2.1-W-1 requires the operable panel partition to meet an NRC rating of not less than 0.65. Please confirm that neighter the cost of field nor the cost of laboratory testing is not to be included by the bidders to meet this minimum rating.	9/24/18	CONFIRMED. THE TESTING NOTED IN SPECIFICATION SECTION 102226 PAR 2.4-W.1 STATES IT IS TO BE A SYSTEM THAT IS IN COMPLIANCE WITH ASTM C423 WITH THE RATING OF NRC 0.65. GC TO PROVIDE A SHOP/SUBMITTAL WITH REQUIREMENTS NOTED.	10/1/2018	
55	MCC105	4	Increment 2	Electrical	E1.11		Increment #2 - Sheet E1.11 South of the Student Center - the feeder connecting OS#8 and MH#8 is shown as MV225.2 while the single-line on sheet E5.01 shows the feeder as MV225.1 Please advise which is the correct feeder designation.	9/25/18	Feeder from OS#8 to MH#8 shall be MV225.1. Provide per single line diagram.	10/1/2018	
56	MCC26	4	Increment 2	Landscape	320523		Increment #2 - Specification Section 320523 par., 2.11-A refers to Section 321300 Rigid Paving, however this section was not provided. Please remove this reference or provide the missing specification section.	9/18/18	Referenced section in par. 2.11-A, 321300 replaced with section 321313	10/1/2018	
57	MCC30	4	Increment 2	Civil	033010, 321313	4/L5.50	Increment #2 - Specification Section 033010 par., 2.10-D calls for 3000 psi and Section 321313 par., 2.8-B-1 calls for 3000 psi, however details 1,2/C3.0 Notes 1 calls for 4200 psi, Pavement Legend Notes 4 and L5.50 Hardscape Notes V also call our 4200 psi. Please confirm the site concrete paving compressive strength that the bidders are to base the bid upon.	9/18/18	Please use 4200 psi for concrete paving.	10/1/2018	
58	MCC24	4	Increment 2	Civil	312300, 033010, 321313		Increment #2 - Specification Section 312300 par., 1.1-A, includes a reference to Soil Sterilant. Please confirm if this is required. If required, provide the specific location and product for the bidders to include. Note that Specification Section 033010 par., 2.13-A calls for Surflan under Concrete for Landscape, and Section 321313 par., 2.4-A calls for Surflan at Site Concrete Paving, thus please confirm Surflan is required below site concrete paving.	9/18/18	SOIL STERILANT REMOVED FROM SPECIFICATION 312300. THE USE OF SURFLAN BELOW SITE CONCRETE PAVING PER DSA APPROVED SPECIFICATION SECTION 033010 AND 321313 IS REQUIRED.	10/1/2018	
59	MCC47	4	Increment 2	Landscape	L5.50		Increment #2 - Sheet L5.50, Hardscape Note B, Please confirm the "Unit Cost for Import Soil." noted in Note B is the same unit cost you are requesting in Specific Allowance #4 of the RFP.	9/18/18	Note B has been removed from the drawings. The specific request allowance #4 of the RFP is still required.	10/1/2018	
60	MCC32	4	Increment 2	Arch/Landscape	323118, 323118, 323119	L5.20, L5.40	Increment #2 - Specification Sections 323118 & 323119, please confirm which specification section the bidders are to base Sheet L5.20 thru L5.40 upon for the Metal Fences & Gates. Note that Section 323118 par., 2.1-A lists 4 manufacturers & an "or equal". Please confirm which of these manufacturers are pre-approved.	9/18/18	REMOVE SPECIFICATION SECTION 323119 IN ITS ENTIRETY	10/1/2018	
61	MCC33	4	Increment 2	Landscape	323119		Increment #2 - Specification Section 323119 par., 2.7-B references specification section 110513 Common Motor requirements for equipment, however this section was not provided. Please provide missing specification section or remove the incorrect reference.	9/18/18	SPECIFICATION SECTION 323119 HAS BEEN REMOVED IN ITS ENTIRETY. GATES/FENCES HAVE NO MOTOR(S)	10/1/2018	
62	MCC104	4	Increment 2	Electrical	E0.01		Increment #2- Sheet E0.01 the same junction box symbol is used for both the "surface mounted junction box" and the "floor/ceiling mounted junction box". Please advise which of these devices sis to use the original symbol and provide the correct symbol for the other device type	9/25/18	THE SURFACE MOUNT JUNCTION BOX IS NOT USED ON THIS PROJECT, REMOVE FROM THE LEGEND.	10/1/2018	
63	MCC22	4	Increment 2	Civil	311000		Increment #2 - Specification Section 311000 par., 1.1-A-4 & 3.6 refers to Topsoil stripping, Please confirm if Topsoil Stripping is required for this project.	9/18/18	TOPSOIL STRIPPING WILL NOT BE A PART OF THIS PROJECT. REMOVE REFERENCES IN SPECIFICATION 311000 PAR. 1.1-A.4 AND PAR 3. 3.6.	10/1/2018	
64	MCC23	4	Increment 2	Landscape	311000		Increment #2 - Specification Section 311000 par., 3.3-A, references section 015639 Temporary Tree and Plant Protection, however this specification section was not provided. Specification section 329113 par., 3.7-A also references section 015639. Please provide the missing specification or remove the references in Specs 311000 & 329113.	9/18/18	REMOVE REFERENCES TO SPEC SECTION 015639 TEMPORARY TREE AND PLANT PROTECTION FROM SPECIFICATIONS 311000 AND 329113	10/1/2018	
65	MCC28	4	Increment 2	Civil	033010, 321313		Increment #2 - Please confirm the difference between Sections 033010 & 321313. Please indicate which section supersedes the other regarding any conflicts.	9/18/18	SECTION 033010 IS FOR NON-STRUCTURAL LANDSCAPE WALLS (LOW WALLS). SECTION 321313 IS FOR NON-STRUCTURAL LANDSCAPE CONCRETE PAVING (ARCHITECTURAL CONCRETE PAVING).	10/1/2018	
66	MCC45	4	Increment 2	Landscape	L4.40	D	Increment #2 - Sheet L5.50, Detail D, Legend Note 1 calls for "continuous painted 1.5-inch round standard stainless steel pip...." Please confirm if the Base Bid Galvanized pipe railing is to be painted or not. If not, delete that call out for paint. Note that Details A, C, D do not refer to "paint" at the rails.	9/18/18	LEGEND NOTES 1, 2, 3/D-L5.50 TO READ "HOT DIPPED GALVANZIED 1.5"..." NO PAINT. DETAILS A, B, C/L5.50 TO READ "HOT DIPPED GALVANIZED 1.5"..." IN LIEU OF STAINLESS STEEL.	10/1/2018	
67	MCC30	4	Increment 2	Civil	033010, 321313	4/L5.50	Increment #2 - Specification Section 033010 par., 2.10-D calls for 3000 psi and Section 321313 par., 2.8-B-1 calls for 3000 psi, however details 1,2/C3.0 Notes 1 calls for 4200 psi, Pavement Legend Notes 4 and L5.50 Hardscape Notes V also call our 4200 psi. Please confirm the site concrete paving compressive strength that the bidders are to base the bid upon.	9/18/18	FOR LOW LANDSCAPE WALLS (NON-STRUCTURAL) 3000 PSI IS ACCEPTABLE PER SPEC SECTION 033010. EXTERIOR CONCRETE PAVING TO BE 4200 PSI.	10/1/2018	
68	MCC31	4	Increment 2	Landscape	321400		Increment #2 - Specification Section 321400, Please provide the location of Unit Pavers - Mortar Set on this project as none can be found on the drawings. If none are to be provided please remove this specification section.	9/18/18	Spec Section 321400 for Unit Pavers is no longer applicable for this project and should be removed.	10/1/2018	
69	MCC42	4	Increment 2	Landscape	L2.20		Increment #2 - Sheet L2.20, Lighting Legend, The Sculpture Uplight is listed as Lumiis SQ600, however E0.3 Exterior Fixtures S9 calls for Vista Lighting #1057 (or an option by Ligman UOD-5001). Confirm that the E0.3 fixtures supersede the L2.20 when they conflict, or are there 3 options to choose from.	9/18/18	CONFIRMED. ELECTRICAL SHEET E0.3 WILL SUPERSEDE SHEET L2.20 FOR FIXTURE MAKE, MODEL AND QUANTITY	10/1/2018	
70	MCC43	4	Increment 2	Landscape	L2.30	4	Increment #2 - Sheet L2.30, detail 4 - At the lower-right is a callout for keynote 19-F2 which is described as Tube Steel Guardrail at Loading Dock, however this is no a loading dock and appears to be similar to L1.20 which has three locations calling for Keynote 26-F2. Please confirm this keynote on L2.30 should be keynote 26 instead of keynote 19. Also keynote 26 refers to details A-D/L5.50 all of which call out this guardrail as "1.5-inch round Stainless Steel standard pipe.", but type F2 in the finish schedule describe the same guardrail as Hot Dipped Galvanized as the Base bid & Stainless Steel as an Alternate bid. Please confirm that the base bid is to be Hot Dipped Galvanized guardrails. Also please confirm if an alternate is to be provided for Stainless Steel, as this alternate is not listed in Specification Section 012300 or the requested Alternates Summary in the RFP.	9/18/18	Part One: The walk and curb at this location are existing to remain. The design intent is to install a new guardrail on top of the existing curb similar to details A-D on sheet L5.50. The keynote on sheet L2.30 has been revised. Part Two: Guardrails to be hot dipped galvanized. Details has been revised to remove reference to stainless steel.	10/1/2018	
71	MCC44	4	Increment 2	Civil	L5.10	D	Increment #2 - Sheet L5.10, Detail H - The width of the Concrete Maintenance Band is listed as "per plan", however the site plans on L1.20 & L2.20 do not list a dimension for the keynote 12-P2 callout. Note this maintenance band scale to 2'-8" wide. Please provide with of the Concrete Maintenance Band.	9/18/18	REFER TO SHEET L3.10 - L3.30 FOR HARDSCAPE LAYOUT DIMENSIONS	10/1/2018	
72	MCC49	4	Increment 2	Landscape	L11.10		Increment #2 - Sheet L11.10, Site Furnishings Legend, S1 - The quantity is called out as 45, however there are 43 shown on the Site Details. Please confirm which quantity the bidders are to base this 4-seat table upon. Sheet L11.10 - Site Furnishings Legend, S3 - The quantity is called out as 42, however there are 43 shown on the Site Details. Please confirm which quantity the bidder are to base this 2-seat table upon.	9/18/18	PART ONE: THE COUNT OF FURNITURE TYPE S1 TO BE REVISED TO 43. PART TWO: THE COUNT OF FURNITURE TYPE S3 IS SHOWN CORRECTLY AT 42.	10/1/2018	

MASTER PBC Log

PROJECT: Rancho Santiago Community College District
Santa Ana College - Johnson Student Center Building Demolition, Increment 1 and 2
DSA #04-116810-1
DSA #04-116810-2

PBC #	GC	Addendum	Package(s)	TRADE/CATEGORY	SHEET / SECTION	DETAIL / PAGE	QUESTION / COMMENT	ISSUED TO DESIGN TEAM	RESPONSE TO COMMENT	Addendum Date	Consultant
73	MCC48	4	Increment 2	Landscape	L9.10		Increment #2 - Sheet L9.10, Tree Plant Palette, The Maverick Hybrid Honey Mesquite is called as 9 each, however there are 10 shown on the Site Plan (left side of the building). Please confirm the quantity should be 10 each.	9/18/18	CONFIRMED. THE QUANTITY OF MESQUITE TREES IS 10.	10/1/2018	
74	MCC50	4	Increment 2	Landscape	L11.10		Increment #2 - Sheet L11.10, Site Furnishing Legend S6 - The round tree grate is called out as 6-foot round, however the details on Sheet L11.10 & Detail 4/L2.30 scale the round tree grate as 5-foot. Please confirm if the round tree grate is to be 6-foot or 5-foot round. (Note the 6-foot square tree grate scales as 6-foot)	9/18/18	ROUND TREE GRATES TO BE 6' DIAMETER PER SITE FURNISHING SCHEDULE.	10/1/2018	
75	MCC92	4	Increment 2	Landscape	L2.10		Increment #3 - Detail 2/L2.10 shows the sloped loading dock area with gradually rising walls along north and south sides of the loading dock. Please review and advise if these walls should receive anti-graffiti coating? See markup for exact location.	9/24/18	CONFIRMED. EXPOSED PORTIONS OF LOADING DOCK WALL TO RECEIVE ANTI-GRAFITTI COATING.	10/1/2018	
76	MCC95	4	Increment 2	Landscape	L2.20		Increment #2 - Note C at the bottom of sheet L2.20 states that at the end of construction walls will receive an anti-graffiti coating on all visible portions. It is clear that this applies to W2 (CMU walls), however please confirm that low wall, Type W1, are also required to receive the anti-graffiti coating.	9/24/18	LOW WALLS (WALL TYPE W1) ARE NOT TO RECEIVE ANTI-GRAFITTI COATING. LOW WALLS TO RECEIVE CLEAR LIQUID SURFACE SEALER (HLQ-125) BY SINAK CORPORATION OR APPROVED EQUAL PER SPEC. SECTION 033010.	10/1/2018	
77	MCC54	4	Increment 2	Civil, Landscape, Low Voltage	C5.4, E1.11, LV0.05	A/C5.4	Increment #2 - Sheet C5.4, Utility Keynote 8 - This keynote calls for concrete conduit per A/C5.4 which shows three 4-inch conduits (telephone-data-electric), however 1/E1.11 Keynote 12 calls for a 1.5 inch conduit for new Panel 1PB and is shown in a different location. Please confirm if this is an additional conduit to be included with the 3-4" conduits. Furthermore LV0.05 Specific plan Note 7 calls for a 2-inch conduit, and Note 8 calls for a 3x2 hand hole that is not shown on C5.4, Note 14 calls for a 1-inch conduit as well. Please coordinate these three drawings and correct as necessary	9/18/18	SHEET C5.4, DETAIL A REVISED TO SHOW ONE CONDUIT IN CONCRETE. SHEET C5.4 SHOWS LOW VOLTAGE LINE AS A REFERENCE, PLEASE USE LOW VOLTAGE AND SECURITY PLANS FOR LAYOUT, SIZES AND DETAILS.	10/1/2018	
78	MCC102	4	Increment 2	Food Service	114000		Increment #2 - Reference Spec Section 114000-1.4.F.3 and 114000-3.5, drawings FS-201 and 202. Spec section 11 40 00-1.4.F.3 indicates that should there be a conflict between the drawings and the specifications, the specifications shall govern. Below are equipment items that are conflicting between the specifications section 11 40 00-3.5 and the drawings with regards to electrical requirements. The specs call for NEMA 5-20P for item #5-01 Cabniet, enclsoed, Bun/Food Pan (NIC). the equipemment schedule calsl for NEMA 5-15P for item #5-01. Please confirm that the specificaitons govern and NEMA 5-20P is required.	9/25/18	Per drawings dated 8/13/15 DSA Final Submittal, Equipment schedule for Item 5-01calls for a NEMA 5-20P 20AMP Service Required.	10/1/2018	
79	MCC103	4	Increment 2	Food Service	114000		Increment #2 - Reference Spec Section 11 40 00-1.4.F.3 and 11 40 00-3.5 drawings FS-101, 102, 201 and 202. Spec Section 11 40 00-1.4.F.3 indicated that should there be a conflict between the drawaings and the specification, the specifications shall govern. REFER TO RFC for additional comments	9/25/18	1. Item 4-10 should be 2 corner guards. Item 4-13 on the plans show the location and the specs call out a lot with a leaner dimension. 2. Item 1-01 should be model 242-1UA-TS per the drawings. 3. Item 1-37 model should be 36S-6BN per the drawings.	10/1/2018	
80	MCC90	5	Increment 2	Architectural	FINISH SPECS		The following sectiosn and paragraphs call out for Extra Materials which in totality will take up a lot of storage space. Please confirm that the bidders are to include providing all of these as listed OR if some of these could be excluded: (SEE RFC for list)	9/24/18	REFER TO ATTACHED REVISED EXTRA STOCK/MATERIAL QUANTITIES.	10/8/2018	
81	MCC101	5	Increment 2	Architectural	A4.02		Increment #2 - Please clarify the finish on Stair 1 wall along gridline 8.6. Detail 1/A4.02 indicates MP-1, which is Trespa 074200. However there is also a noate for the same wall on 1/A4.02 indicating 074213.A1, which is Dri-Design 074213. Please clarify finish product at this location	9/25/18	THE FINISH IS MP-1 (DRI-DESIGN 074213.A1) PER KEYNOTES ON SHEET A4.02, A6.10 AND SHEET A8.21 UNDER WALL FINISHES / WALL PANELS.	10/8/2018	
82	MCC100	5	Increment 2	Architectural	A4.02		Increment #3 - Please clarify the finish of the Stair 1 center divider. Elevation 2 on A4.02 calls out WP-2 which is Trespa High Pressure Laminate 074200. Stair 1 blow up elevations 5 & 10/A6.10 call out Metal wall panel Dri-Design 074213. Detail 10/A9.72 calls for High Pressure Laminate system (Trespa 074200)	9/25/18	CENTER DIVIDER AT STAIR 1 IS 074200.A1 (TRESPA WP-2). REVISE KEYNOTES AT 5 & 10/A6.10 TO READ 074200.A1. DETAIL 10/A9.72 IS CORRECT CORNER DETAIL. ENLARGED CORNER DETAIL REFERENCE	10/8/2018	
83	MCC62	5	Increment 2	Architectural			Increment #2 - From all of the documents it can be determined that the North, South nd East walls of Elevator 2 are tiled full height, however is is unclear if the western wall is tiled as well. What about within the drinking fountain alcove, is this tile too? See green highlighted areas. Please confirm these are tile and provide which type/s.	9/20/18	PER CONTRACT DOCS. ELEV NO 2 TO RECEIVE 09300.A4 (WT-1). ALL EXTERIOR WALLS ON THE ELEVATOR TOWER ARE TILED INCLUDING THE DRINKING FOUNTAIN ALCOVE.	10/8/2018	
84	MCC65	5	Increment 2	Architectural	A5.13	3	Increment #2 - Detail 3/A5.13 calls out 053123.A2 above the storefront, however this call out is for the metal panel at the west plaza shade structure. Please review and confirm should this be changed to Metal Panel 074231.A1. also please provide detail for how the metal panel roof transition to plaster.	9/20/2018	THE METAL PANEL ABOVE THE STOREFONT IS METAL PANEL MP-2 AND THE KEYNOTE IS 074213.A1 PER THE EXTERIOR ELEVATION SHEET A4.01. KEYNOTE ON 3/A5.13 TO READ 074213.A1. TRANSITION DETAIL FROM METAL PANEL ROOF TO PLASTER WALL WOULD BE SIMILAR TO THE SOUTH METAL CANOPY IN THE SERVICE YARD, REFERENCE DETAIL 9/A9.42.	10/8/2018	
85	MCC68	5	Increment 2	Architectural	A6.02		Increment #2 - Sheet A6.02, at stair #3 the framed areas along gridline N have metal panel called out along the North, South and East elevations. Please confirm that the metal wall panel wraps all the way around and is also on the west side (highlighted in pink) of these walls (no elevations or details can be found to confirm).	9/20/18	YES. THE METAL PANEL WRAPS ALL AROUND AS SHOWN ON 7/A6.03. ARROW IS SHOWN CORRECTLY.	10/8/2018	
86	MCC61	5	Increment 2	Architectural	A3.10, A3.11		Increment #2 - Sheets A3.10 & A3.11 near gridlines A.1 & 7 and A.1 & 6.3 please clarify the ceiling finish south of Stair #1 at the West Lobby Entrance and at the intermediate landing. Details 1, 5 & 10/A6.10 seem to show soffit ceiling, but no material is called out and details 20 & 15/A9.72 which should show the ceiling at the stairs do not show a ceiling. Please clarify	9/20/18	THE LOBBY ENTRANCE CEILING(S) SHOULD BE METAL PANEL MP-1 TO MATCH THE WALLS. THERE IS NO "FINISH" UNDER THE RUN(S) AND LOWER LANDING(S) OF THE STAIRS. THEY ARE EXPOSED STRUCTURE, PAINTED WITH AESS PAINT/FINISH. COLOR TBD.	10/8/2018	
87	MCC9	5	Increment 2	Arch/District/Civil	C1.0D, A0.00D	McCarthy\9-PBC.PDF.pdf	Increment #1 - Sheet C1.0D, Demolition Keynote 5 - The Pile Caps are each listed with a Demo Keynote 5 and a depth "D", however when comparing with Detail 1/A0.00D there are 18 pile caps that do not match, please coordinate and confirm which supersedes the other. see attached marked up sketch.	9/13/18	REFER TO ADDENDUM NO 4, REVISED INCREMENT NO 1, SHEET C1.00-D FOR COORDINATED PILE DEMO DEPTHS WITH ARCHITECTURAL.	10/8/2018	
88	MCC59	5	Increment 2	Architectural	57300, A9.70, A9.71		Increment #2 - Specification Section 057300-2.3D calls out the in-fill woven wire mesh as stainless steel, square 2" pattern, by McNichols or equal. Detail 24/A9.70 calls for stainless steel woven wire infill panel and frame, by Wagner "Versatile Spine". Details 12, 17 & 27/A9.70 calls for woven metal mesh infill per spec (with calls for stainless steel). Details 14 & 19/A9.70 call for woven mesh screen, galvanized and then painted. Details 2, 22, 24 & 30/A9.71 calls for 2"x1" rectangular pattern trimmed steel wire mesh, then painted. Detail 26/A9.71 calls for galvanized wire infill and then painted. Please clarify what it to be provided at the woven wire mesh panels. 1) 2" square patter or 2"x1" rectangular pattern? 2) Is the wire mesh to be by McNichols or Wagner? 3) Is the wire mesh supposed to be Stainless Steel, galvanized or Carbon Steel?	9/19/18	REVISE SPEC 057300-2.3, D LANGUAGE TO READ "....RECTANGULAR PATTERN, 2"X1" WOVEN WIRE MESH WITH U-EDGING. REVISE SPEC 057300-2.3, D ADD PRODUCT 2. WAGNER "VERSATILE SPINE" OR EQUAL. DETAILS 12, 14, 17, 19, 24 & 27/A9.70 REVISE LANGUAGE TO READ "RECTANGULAR WOVEN-WIRE MESH INFILL, PAINTED PER SPEC". DETAILS 2, 22, 24, 26 & 30/A9.71 REVISE LANGUAGE TO READ "RECTANGULAR WOVEN-WIRE MESH INFILL, PAINTED PER SPEC". 1) PATTERN IS 2"X1" 2) WELDED WIRE MESH IS EITHER, BOTH ARE AN APPROVED EQUAL 3) HIGH-PERFORMANCE COATINGS/PAINTED STEEL.	10/8/2018	
89	MCC125	5	Increment 2	Electrical	E0.10		Increment #2 - Panelboard "4M" on drawing E0.10 is missing required amperage, main breaker or main lug size and missing required quanitty and sizes of branch circuit breakers. Please advise what will be required.	9/27/18	Panelboard 4M was shown with a distribution board schedule. Refer to Addendum #5 for revised schedule including all information.	10/8/2018	
90	MCC112	5	Increment 2	Electrical	E601		Increment #2 - Sheet E601 detail #3 shows an 8" concrete slab for the (N) 750KA XFMR. Often times with this pad configuration, 200A loadbreak elbow if required, are ineffective as a disconnecting means due to the restrictions of conduits with respect to the short distance between the HV bushing wells and finish surface of the pad. these restrictictions prevent someone from disconnecting the cables while energized. and utilizing the parking bushings as inteneded. please confirm that the detail #3 is the correct choice for the pad mounted XFMR as opposed to detail #1.	9/26/18	Detail 3/E601 is the correct detail for the 750kVA transformer. Wire size is #4/0 per single line diagram. Contractor shall provide enough slack to allow for the bends.	10/8/2018	

MASTER PBC Log

PROJECT: Rancho Santiago Community College District
Santa Ana College - Johnson Student Center Building Demolition, Increment 1 and 2
DSA #04-116810-1
DSA #04-116810-2

PBC #	GC	Addendum	Package(s)	TRADE/CATEGORY	SHEET / SECTION	DETAIL / PAGE	QUESTION / COMMENT	ISSUED TO DESIGN TEAM	RESPONSE TO COMMENT	Addendum Date	Consultant
91	MCC124	5	Increment 2	Electrical	E5.01		Increment #3 - General note #1 on Sheet E5.01 calls for enclosure skirts to floor for surface mounted panelboards but specification section 262416-2.1B.4 calls for ceiling and floor skirts for surface mounted panelboards. Please clairfy wich is correct.	9/27/18	PROVIDE PER NOTE ON E5.01	10/8/2018	
92	MCC123	5	Increment 2	Landscape	L2.30		Increment #3 - Sheet L2.30, in Alternate #1, there is a tube steel guardrail called for as part of the alternate pricing. Within this scope there is also request for alternate pricing on the guardrail (hot dipped galvanized or stainless steel). Please advise which should be included with the alteranate #1 pricing - Galvanized or Stainless Steel?	9/27/18	REMOVE NOTE FOR ALTERNATE #1. BASE BID IS FOR HOT-DIPPED GALVANIZED TUBE STEEL GUARDRAIL	10/8/2018	
93	MCC109	5	Increment 2	Electrical	ED1.01		Increment #2 - Reference drawings ED1.01 Note #4, E5.01 single line E1.11 site. To bypass the switch and keep the campus loop operational per note #4 on DWG ED1.01, a current single line is needed. DWG E5.01 reflects new construction only from MH #22. is there a current single line of the backbone showing MV circulits from MH #22 to PB #7 and beyond?	9/26/18	See attached single lines from Linik Corporation; on site CM.	10/8/2018	
94	MCC64	5	Increment 2	Architectural	A5.13	2	Increment #2 - Detail 2/A5.13 please clarify if the interior side of the parapet is 22 ga sheet metal flashing as it is marked 076200.A1 or modified bituminous membrane roofing as shown on 17/A9.30. same thing is shown in detail 3/A5.13, please confirm this should be modified bituminous membrane roofing as well.	9/20/18	REVISE THE KEYNOTE AT 2/A5.13 TO 075500.A1, INTERIOR OF PARAPET WILL BE VERICALLY APPLIED MODIFIED BITUMINOUS MEMBRANE FLASHING. THE DETAIL REFERENCE 17/A9.30 IS CORRECT.	10/8/2018	
95	MCC78	5	Increment 2	Architectural	A7.51		Increment #2 - Sheet A7.51, keynote 101116.A2, this frosted glass Markerboard is not specified in Section 101116, nor is Egan Visual listed as an approved manufacture. Provide a specification section for this markerboard, or confirm that the bidders are to provide & install this system per Manufacturers information.	9/20/18	PROVIDE 1/4" THICK FRAMELESS TEMPERED GLASS, DRY ERASE, FROSTED ON THE BACKSIDE. BASIS OF DESIGN: EGAN-GLASSWRITE MARKERBOARD PER MANUFACTURERS INSTALLATION REQUIREMENTS OR A PRODUCT OF EQUAL VALUE.	10/8/2018	
96	MCC84	5	Increment 2	Architectural	A8.31		Increment #2 - On sheet A8.31 door J208A is mared as a "pair", but is called ouas a Type D2 which is a single door. On sheets A2.22 & A7.23 this door is drawn as a single door. Please confirm Door J208A is a single door and the mark indicating this is a apir should be removed from sheet A8.31.	9/24/18	CONFIRMED DOOR J208A IS A SING DOOR. REMOVE THE "X" FROM THE DOOR SCHEDULE AT DOOR J208A.	10/8/2018	
97	MCC129	6	Increment 2	Architectural	G3.11		Increment #2 - Sheet G3.11 detail 22 has a note that calls for the Cast Aluminum Letter as 12" high, x 2" thick, howver the dimension is listed as 6-inches. Confirm that the note should be revised to 6" high to match the dimension.	9/27/18	BOTH NOTE AND DIMENSION SHOULD BE REVISED TO: 7" HIGH AT LOBBY AND 10" HIGH AT CAMPUS STORE/GRAB N GO	10/15/2018	
98	MCC128	6	Increment 2	Architectural	G3.11		Increment #2 - Sheet G3.11, detail 11 shows installation of Cast Aluminum Letters that are either 1'-0" or 1'-6" tall. There are two sets of 30" metal letters (JSC) shown in elevation details 1 & 2/A4.01 keynote 101400.A5. please provide an installation detail for these 30" high letters or confirm that detail 11/G3.11 can be used.	9/27/18	DETAIL 11/G3.11 CAN BE USED. REVISE DIMENSION TO 30" FOR "JSC" SIGN AND 18" HIGH FOR OTHER EXTERIOR SIGNS.	10/15/2018	
99	MCC60	6	Increment 2	Architectural	A9.72	5	Increment #2 - Detail 5/A9.72, the metal panel cladding around the stair guardrail shows the waterproofing wrapping up the guardrail support and the metal panel comes up to the support, however there is nothing stopping water from getting behind the metal panel. please review and advise. should sealant be added to this detail?	9/20/18	REFER TO ATTACHED FOR REVISED DETAIL 5/A9.72. WATERPROOFING AROUND GUARDRAIL IS NOT NEEDED. SEALANT AND ROD SHOULD BE ADDED AROUND THE POST AND BETWEEN THE METAL PANELS. PLAN VIEW IS ALSO PROVIDED IN THE SAME DETAIL.	10/15/2018	
100	MCC66	6	Increment 2	Architectural	A2.30		Increment #2 - On sheet A2.30 along gridline D please clarify the parapet finish and the extent of each finish along this line. Wall cut 1/A5.03 near gridline 3.2 seems to indicate that the roofing wraps up the parapet on the west side, however detail 1/A9.31 at the access ladder seems to indicate that there is metal panel along this side of the parapet. Please clify the west side and also confirm that the roofing on the east side of this parapet wall wraps up the roof to the parapet cap and is not something else. Please also clarify the finish on the south side of the parapet along gridline 7. the only detail cut along this wall (27/A9.31) is for the screen wall ast the AHU, which is not this wall. and the elevations for this area do not have a material coall out (see attached). we are assuming the north side of this parapet wall is the roofing membrane wrapped up the wall.	9/20/2018	ALONG GRIDLINE D: USE DETAIL 2/A9.32 FOR PARAPET BETWEEN GRIDLINE 3.2 & 3.9. BETWEEN GRIDLINE 3.9 TO GRIDLINE 5 USE ATTACHED DETAIL RFC66.1. BETWEEN GRIDLINE 5 TO GRIDLINE 7, USE ATTACHED, RFC 66.2 (REVISED DETAIL 1/A9.31 - LADDER WHERE OCCURS. ALONG GRIDLINE 7: SEE ATTACHED PLAN FOR THE LOCATION OF TRESPA PANEL DIMENSIONED 19'-6". REFER TO DETAIL 1/A9.40 FOR TRESPA FLASHING AT PARAPET. REFER TO ATTACHED RFC 66.3 FOR TRESPA BASE AT ROOF (PROVIDED DETAIL 1/RFC 66.3) @ PLASTER PARAPET USE ATTACHED, RFC 66.2 (REVISED DETAIL 1/A9.31)	10/15/2018	
101	MCC80	6	Increment 2	Architectural	A1.03, A1.04		Increment #2 - Detail 5/A1.03 and 6/A1.04, show the accessible drinking fountains offset from Gridline "X2". On 7 & 22/A1.03 the same fountains are located on Gridline "X2" Please clarify the location of the accessible drinking fountains, the framing layout and CMU layout.	9/24/18	USE DETAIL 5/A1.03 AND 6/A1.04 FOR LOCATION OF DRINKING FOUNTAIN.	10/15/2018	
102	MCC81	6	Increment 2	Architectural	A1.03, 079500	13/A1.04	Increment #2 - Detail 5/A1.03 Keynote 079500 calls for a sisimic joint cover near Gridlines X4/XA" and at "X2". Detail 13/A1.04 shows a seismic weateher seal. Please confirm a seismic weahter seal is to be provided in liue of a joint cover.	9/24/18	USE A SEISMIC WEATHER SEAL IN LIEU OF A JOINT COVER	10/15/2018	
103	MCC82	6	Increment 2	Architectural	A7.51		Increment #2 - Refer to Sheet A7.51, in the lobby of the first floor there is a freestanding wall that supports a glass markerboard. No wall type is provided for this wall. Please provide a wall type and details for this wall.	9/24/18	USE DETAIL 18/A9.60 AND 4/S4.11 FOR WALL CONSTRUCTION.	10/15/2018	
104	MCC147	6	Increment 1	Geo-Tech/Structural	SOILS REPORT		See RFI Question on over-ex	10/3/18	SECTION A-A ON SHEET C1.0-D SHOULD GOVERN. THE ELEVATOR PIT WILL HAVE AN ADDITIONAL OVER-EXCAVATION THEN THE MAJORITY OF THE BUILDING. AS STATED IN THE REPORT THE CLAYEY SOILS MAY BE USED FOR BACKFILL EXCAVATIONS DEEPER THAN 3FEET BELOW BOTTOM OF FOOTING, FOR EXAMPLE. IF THE EXCAVATION IS 10 FEET BELOW THE BOTTOM OF THE FOOTING. ONSITE SOILS MAY BE USED AS RECOMPACTED FILL BETWEEN 10 AND 3 FEET BELOW THE BOTTOM OF THE FOOTING. THE UPPER 3 FEET BELOW THE FOOTING SHOULD COMPRISE OF ENGINEERED FILL CONSISTING OF LOW VOLUME CHANGE SOILS.	10/15/2018	
105	MCC148	6	Increment 1	Civil	C1.0-D		Increment #2 - Sheet C1.0-D, Detail 1, the dimension listed for the removal of the Caissons is listed as 10' or greater using formula 2xB, however some of the listed depths "D" area at 8' at several locations. Confirm that detail 1 should be disregarded since the site plan has a depth "D" listed at all locations for the depth of the caisson removals.	10/3/18	DETAIL 1 SHOULD GOVERN AND A MINIMUM D OF 10 FEET SHOULD BE USED INSTAED OF 8 FEET.	10/15/2018	

MASTER PBC Log

PROJECT: Rancho Santiago Community College District
Santa Ana College - Johnson Student Center Building Demolition, Increment 1 and 2
DSA #04-116810-1
DSA #04-116810-2

PBC #	GC	Addendum	Package(s)	TRADE/CATEGORY	SHEET / SECTION	DETAIL / PAGE	QUESTION / COMMENT	ISSUED TO DESIGN TEAM	RESPONSE TO COMMENT	Addendum Date	Consultant
106	MCC110	6	Increment 2	Electrical			Increment #2 - Do the existing medium voltage transformers being remvoed contain PCB's? Nothing can be found in the Hazardous Material Report	9/26/18	UNLESS NEW INFORMATION IS DISCOVERED FROM LABELS/NAMEPLATES ON THE EQUIPMENT; DIELECTRIC FLUIDS SHOULD BE PRESUMIED TO CONTAIN PCB. SUBCHAPTER 1 OF 40 CFR PART 761 GOVERNS THE HANDLING, DECONTAMINATION/PROFILING & DISPOSAL OF THE EQUIPMENT/FLUID.	10/15/2018	
107	MCC107	6	Increment 2	Low Voltage	281300		Increment #2 - No brand is specified for access control (Specification Section 281300) but spec section 1.2 states that it must be compatible with existing campus ACS. Please provide what is existing so that bidders can provide a product that is compatible.	9/25/18	THE CAMPUS ACCESS CONTROL SYSTEM IS GENETEC SYNERGIS SECURITY CENTER. ALL ACCESS CONTROL FIELD PANELS SHALL CONCCET TO EXISTING GENETEC SYNERGIS SECURITY SYSTEM. SUBSTITUTIONS ARE NOT ALLOWED.	10/15/2018	
108	MCC108	6	Increment 2	Low Voltage	281300		Increment #2 - Specification section 281300 section 1.1 seems to not be complete. See below - it appears that the sentence was never finished. Please review and provide missing information.	9/25/18	THE SECURITY CONTRACTOR SHALL TEST KEY-FOBS ON ALL PORTALS INCLUDING ON THIS PROJECT. CONTRACTOR SHALL COORDINATE WITH DISTRICT TO IDENTIFY A SAMPLE OF PORTALS CONNECTED TO THE EXISTING GENETEC ACCESS CONTROL SYSTEM ON OTHER BUILDINGS ON THE CAMPUS.	10/15/2018	
109	BCC1	6	ALL	District	Exhibit D		Bernards would like to requrest the assistance of the District in identification of the DVBE-certified subcontractors and suppliers. Bernards would like to help achieve the DVBE participation goal of 3% per year of the overall dollar amount expended each year	10/8/18	The District does not have a list of qualified DVBE-certified sub-contractors and suppliers for this project.	10/15/2018	District
110	MCC83	6	Increment 2	Architectural	A1.04		Increment #2 - In Detail 16/a1.04 there is a detail provided for the sheet metal closure at the east CMU wall (8/A1.04) however no detail is provided for the sheet metal closure at the west CMU wall. Please confirm that the sheet metal closure on the west wall (along grid line XA) shall be similar to the sheet metal closure in detail 8/A1.04.	9/24/18	Please use detail 8/A1.04 sheet metal closure at the west CMU wall.	10/15/2018	
111	MCC86	6	Increment 2	Architectural	A2.22		Increment #2 - On shee A2.22 there is a window W25 at Gridlines 13/C.8 (also on A7.25). Sheet A8.42 does not have a detail for W25. Please provide a detail for Windows W25 or revise the call out on shetets A2.22 and A7.25 to another window type.	9/24/18	Window type W25 should be W14, please use detail 14/A8.42.	10/15/2018	
112	MCC96	6	Increment 2	Architectureal	A2.30		Increment #3 - Sheet A2.30 near gridlines D/3.2, cross section Detail 1/A5.03 takes you to 2/A5.14 which ultimately takes you to detail 17/A9.30, which shows a parapet with a flashing cap. However the top of roof and parapet appear to be be 34'-0" at this location. Please review and provide a different detail for this location as 17/A9.30 will not work if the roof and parapet are the same location.	9/25/18	Please note callout on sheet 2/A5.14 referencing detail 17/A9.30 should reference detail 2/A9.32.	10/15/2018	
113	MCC97	6	Increment 2	Architectural	A2.30		Increment #2 - Sheet A2.30 along gridline "3.9" cut section Details 3/A5.02 and 1/A5.01 lead to Detail 7/A9.31 that shows modified membrane flashing at the edge of the high roof. Cut section details 3/A5.10 near gridline "K" also shows the high roof but reference Detail 6/A9.32. This detal shows two nailers on the side of the building and a formed fascia cover at the edge of the high roof. Please clarify which condition applies at the edge of roof along gridlines "3.9" and "N" for the high roof.	9/25/18	Please use detail 7/A9.31 at cut section Detail 3/A5.10 and at edge of roof along Gridlines 3.9 and "N".	10/15/2018	
114	MCC113	6	Increment 2	Architectural	A2.12		Increment #2 - Sheet A2.12 detail 1 - At grids A.3 & 8.6 there is a call out for Keynote 115213.A2 Projection Screen, however Details 9/A7.08 & 26/A7.09 refer to a "PWB" per Keynote 274116.B1 Markerboard. Confirm that the A2.12 Keynote 115213.A2 should be either deleted or revised to 274116.B1 to match the otehr details.	9/26/18	Please use keynote 274116.B1 instead of keynote 115213.A2 at sheet A2.12 Detail 1 at Grid A.3 & 8.6.	10/15/2018	
115	MCC115	6	Increment 2	Architectural	A7.07		Increment #2 - Sheet A7.07 Detail 8, At the lower left, there are 3 lockers called out per Keynote 105113.A3 for a 24-inch wide locker, however elevation 23/A7.07 calls these lockers to be keynote 105113.A1 which are 12-inch wide. Confirm that thes are to be three 24-inch wide lockers instead of six 12-inch wide lcokers.	9/26/18	Please use keynote 105113.A3 instead of 105113.A1 at Elevation 23/A7.07. Lockers should be 24" wide.	10/15/2018	
116	MCC122	6	Increment 2	Architectural	A7.10		Increment #2 - Sheet A7.10, Health & Wellness Office Room J110-8 on A7.10 shows "vision exam" on floor plans designating a pre-set standing location for patients. See markup attached for exact location for patients. See markup attached for exact location. please clarify if this "vision exam" with shoe location and hashed vision lines is to be a decal or a graphic set into flooring. additionally please provide informatino necessary for pricing. (ie applied paint with sealed top coat or graphic applied reslietnt sheet flooring).	9/26/18	Please see attached Vision Graphic Detail.	10/15/2018	
117	MCC165	6	Increment 2	Architectural	A8.31		Increment #2 - Sheet A8.31, Door J208-1A is called out as "type h", however the hardware set is listed as "072". Please confirm that the HW set for this sliding door should be "962" instead.	10/8/18	CONFIRMED DOOR J208-1A DOOR HARDWARE IS TO READ 962	10/15/2018	
118	MCC163	6	Increment 2	Architectural	A7.22		Increment #2 - Sheet A7.22, elevations 21, 22, 26 & 27. Sheet A8.20 rooms finishes state PL-1/RS/QZ-1/PL-3 for cabinet and counter top are required in room J203. Nothing is shown on elevation 21, 22, 26 & 27/A7.22. Please clarify what is required.	10/5/18	REMOVE REFERENCES OF CASEWORK CABINET/COUNTERTOP IN ROOM J203	10/15/2018	
119	MCC162	6	Increment 2	Architectural	A3.11		Increment #2 - Sheet A3.11 references detail 17/A9.52 at the soffit in J110 Health and Wellness center which shows RS-1 is required at the soffit for room J110 Health and Wellness center. A) Please confirm if it is required at the shaded areas (the framed wall column) shown on elevation 8 & 13/A7.11. B) Please confirm it is required on the back side of elevation 22/A7.10 but instead of 1'-6 1/2" H- it shall be 1'H per 8/A7.11	10/5/18	CONFIRMED SOFFIT AND 4-SIDES OF COLUMN PER DETAILS 15&18/A9.52, REVISE DETAIL ON A3.11 TO 15&18/A9.52. A) CONFIRMED SHADED AREAS ARE THE TRANSLUCENT RESIN PANEL SYSTEM. B) CONFIRMED SHOULD BE A VERTICAL DIMENSION THAT CAN BE INSTALLED PER DETAILS 15&18/A9.52	10/15/2018	
120	MCC160	6	Increment 2	Architectural	A2.40	14	Increment #2 - In detail 14 on sheet A2.40 there is a callout for "1/4" separation material between threshol curb flashing" Please review and advise if a sheet metal flahsing is needed at this location. There is a note similar in detail 15, but it indicates that the separation is between wall and concrete topping slab which makes more sense.	10/5/18	CONFIRMED INSTALL 1/4" SEPARATION MATERIAL - BETWEEN WALL AND CONCRETE TOPPING SLAB IN LEUE OF THRESHOLD CURB FLASHING	10/15/2018	
121	MCC158	6	Increment 2	Architectural	A7.12	7	Increment #2 - Sheet A7.12, Detail 7, Keynote 102813.A1 is listed for the Paper Towel Dispenser , however this apears to be a 102813.A3 instead. Please review and confirm which should be provided.	10/5/18	CONFIRMED CALL OUT SHOULD BE 102813.A3	10/15/2018	
122	MCC157	6	Increment 2	Architectural	A7.07, A7.11		Increment 2 - Sheet A7.07, Detail 23. There are unlabeled symbols behind the sink which appera to be a paper towel dispenser and a soap dispenser. Please review and indicate if these are to be included since these are not called out by keynotes. Sheet A7.11, Detail 6/A7.11 has two unlabeled symbols that look like a paper towel dispenser and a soap dispenser. Detail 34/A7.11 has an unlabeled symbol looks like a soap dispenser. PLease review and indicated if these are to be included since these are not called out by keynotes.	10/5/18	REFER TO 23/A7.01; THE SYMBOL TO THE RIGHT OF THE SINK IS TO BE A NEW KEYNOTE, ADD KEYNOTE 102813.A3 (SEMI-RECESSED PAPER TOWEL DISPENSER, BASIS OF DESIGN: BOBRICK B-29744, SEE SPECS. THE SYMBOL TO THE LEFT OF THE SINK IS TO BE KEYNOTE 102813.A4. REFER TO 6/A7.1; THE SYMBOL TO THE LEFT OF THE SINK IS TO BE KEYNOTE 102813.A3. THE SYMBOL TO THE RIGHT OF THE SINK IS TO BE KEYNOTE 102813.A4.	10/15/2018	

MASTER PBC Log

PROJECT: Rancho Santiago Community College District
Santa Ana College - Johnson Student Center Building Demolition, Increment 1 and 2
DSA #04-116810-1
DSA #04-116810-2

PBC #	GC	Addendum	Package(s)	TRADE/CATEGORY	SHEET / SECTION	DETAIL / PAGE	QUESTION / COMMENT	ISSUED TO DESIGN TEAM	RESPONSE TO COMMENT	Addendum Date	Consultant
123	MCC156	6	Increment 2	Architectural	011000, A7.01	23	Increment #2 - Sheet A7.01, Detail 23. There is a callout for keynote 011000 that looks similar to the Baby Changing Station per keynote 102813.B7 at detail 22/A7.01. Please review and advise if this is to be included in the Men's Restroom.	10/8/18	REVISE KEYNOTE TO READ 102813.B7. CONFIRMED IT BELONGS IN THE MENS RESTROOM.	10/15/2018	
124	MCC67	6	Increment 2	Architectural	A2.30	3/A5.13	Increment #2 - Refer to sheet A2.30 and Detail 3/A5.13 - Please clarify and provide additional details for how the plaster, metal wall panels and decorative wall panels all come together at the below location and provide a watertight assembly	9/20/18	SEE ENLARGED ROOF PLAN AND ATTACHED DETAIL SKA124.01. SEE REVISED DETAIL 3/A5.13 ATTACHED	10/15/2018	
125	MCC147.1		Increment 1	DISTRICT	C1.0-D		Increment #1 - C1.0-D, Reference previous MCC RFI 147. If on site soil is acceptable and bidders are to over excavate the bulk of the soil below the foundations, please indicate where soil can be stockpiled for either re-use or eventual export from the site.	10/4/18	THE GENERAL CONTRACTOR WILL HAVE TO DETERMINE THEIR STOCKPILING AND BACKFILL APPROACH (MEANS AND METHOD).	10/15/2018	
126	MCC88	6	Increment 2	Architectural	87100		Increment #2 - There are 43 Doors that have a callout for hardware set 962 which per Section 087100 on page 27 describes these to be "All hardware to be by DIRTT Manufacturer", however only these 3 doors have the DIRTT wall system: J209-1A, J209-3A, J209-4A. Please provide the door hardware for the other 43 doors that are listed with the hardware set 962. Please note that if these are supposed to be DIRTT doors the walls are currently shown as typical metal studs & drywall (such as "A4" per A9.60)	9/24/18	Door Types H and J are acoustical overhead sliding wood doors manufactured by DIRTT. We have 3 doors mounted on the DIRTT glass wall system but the other doors referred to in the RFI mounted on a metal frame gyp board wall. (I'm not sure if their exact count of 43 is accurate but it's around there). The door hardware for the barn doors is specified by DIRTT in spec section 102220. That's why the door hardware states to by DIRTT Manufacturer	10/15/2018	
127	MCC114	6	Increment 2	Architectural	A6.01		Increment #2 - Sheet A6.01 Detail 26 - The keynote 105613.A4 Storage cabinet scale to 36x72, however keynote 105613.A4 description calls for this to be Hon Brigade HSC 2472. Confirm that the model number supersedes the scaled dimensions. Note that this also applies to the two other metal cabinets at the Janitors room on Detail 30/A7.02 & 25/A7.07.	9/26/18	The model number supersedes the dimensions on the drawings. 24.13" deep x 36" wide x 72" high	10/15/2018	
128	MCC93	6	Increment 2	Architectural	055213, 099113		Increment #2 - Pipe and Tube Railings specification section 055213 par. 2.6-E & I reference specification section 099113 - Exterior Painting and Section 099123 - Interior paintings. These two specifications sections are not provided. Please provide the missing specification or revise the reference in 055213.	9/24/18	REVISE REFERENCES IN SPECIFICATION 055213 PAR 2.6-E AND I TO READ: 099000 - EXTERIOR PAINTING, SECTION 099000 INTERIOR PAINTING.	10/15/2018	
129	MCC155	6	Increment 2	Architectural	Alternate 3		Alternate #3 in the RFP calls for a Add to install an Anti-graffiti Resistant Coating on the lower half of exteriro plaster walls adjacent to a walkable surface and references specification section 099623 - GRAFFITI-RESISTANT COATINGS - however in specification section 099000-3.8C a different than what is called for in spec 099623 is listed. Please review and confirm which product should be used at the plaster walls.	10/9/18	OMIT THE ALTERNATE #3 AND USE THE SPECIFICATION SECTION 099623 MATERIAL/MANUFACTURER.	10/15/2018	
130	MCC154	6	Increment 2	Architectural	99623		Substitution request : Subcontractor requests to use TDS-VAndlGuard in lieu of Micorguard - section 099623-2.1. Please review and advise if acceptable.	10/5/18	NOT ACCEPTABLE, PROVIDE PER SPECIFICATION SECTION 099623	10/15/2018	
131	MCC136	6	Increment 2	Architectural	A8.21		Increment #2 - Sheet A8.21, Materials & Color Schedule lists TW and it is described as Koroseal Tac-Wall, however this call out cannot be located on the drawings nor in the Project Manual. Please provide the locations for the "TW" and a specification section. Note that TW-2 has been located & is defined per Section 098413.	10/2/18	TW is not being used. Please use TW-2.		
132	MCC137	6	Increment 2	Architectural	A8.20		Increment #2 - TW-2 (see RFC for questions)	10/2/18	Confirmed. Please use the acoustical product provided in PBC#37.		
133	MCC138	6	Increment 2	Architectural	A8.20, A8.21		Increment #2 - Sheet A8.21, Material & color Schedule, WD-3 calls for Armstrong Woodworks Vector 6680 W7 NLC with 5479 Bioacoustic fill, however this system is not specified in Section 095113 par., 2.4 (Model: 6480 W4 NLC with 5823 Bioacoustic infill. (Class B) is spec'd). Sheet A8.20 - Calls out WD-2 at rooms (J117, J117, J118, J219-1, J219-2, J219-3, J219-4), however the acoustical ceiling type is called out as WD-3 on sheets A3.10 & A3.20, and Detail 1/A3-25 enlarged ceiling plan calls out WD-3 as well. Please confirm which is correct and revise the specs accordingly.	10/2/18	WD-3 should be used in these rooms.		
134	MCC111	6	Increment 2	Architectural	A2.12		Increment #2 - Sheet A2.12 and detail 3/A7.15 indicate 3 refrigerators as Owner Furnished Contractor Installed. Elevation 5/A7.15 indicates these same refrigerators as Owner Furnished Owner Installed. Please clarify if these refrigerators are Contractor installed or Owner installed. If Contractor installed, please provide clarification as to where refrigerators will be received, installation instructions, and model information for coordination with the trades	9/26/18	THE 3 REFRIGERATORS ARE TO BE OWNER FURNISHED CONTRACTOR INSTALLED, OFCI. COORDINATION WITH THE DISTRICT DURING CONSTRUCTION FOR DELIVERABLES WILL BE REEQUIRED. INSTALLATION INSTRUCTIONS WILL BE PROVIDED WITH EQUIPMENT. WET/DRY UTILITIES FOR EQUIPMENT IS SHOWN WITHIN DSA APPROVED CONTRACT DOCUMENTS.	10/15/2018	
135	MCC159	6	Increment 2	Architectural	A9.31		Increment #2 - Sheet A9.31, Detail 27. Please provide a detail for the transition from roofing to plaster in detail 27 on A9.31	10/5/18	REFER TO DETAIL 30/A9.30 FOR TRANSITION	10/15/2018	
136	MCC 85	6	Increment 2	Architectural	A2.22		Increment #2 - On sheet A2.22 along Gridline "12.4" Rooms J209-2 through J209-4 there are window call out symbols, indicating there are windows beside the doors, however they are unmarked. Sheet A7.25 calls these walls out as custom prefabricated walls. Please confirm these walls are to be custom prefab walls and the window call out on A2.22 can be removed.	9/24/18	Yes the rooms J209-2 through J209-4 are custom prefabricated wall with glass panels. Window call outs on sheet A2.22 can be removed.	10/15/2018	
137	MCC130	6	Increment 2	Architectural	A7.16		Increment #2 - Sheet A7.17, detail 8, The lockers at gridline L just North of gridline 7 per detail 19/A7.16 are called out as keynote 105113.A1 by DeBorough, however Section 114000 par. 3.5 item #1-02 calls these same lockers a manufactured by NIFSEC. Confirm that the lockers at Prep Area J118-1 are acceptable as either NIFSEC or DeBourgh. if NIFSEC is approved, provide the specific locker model for this location. also, confirm the size of these lockers nothing that on Detail 8/A7.16 these lockers scale to 12x12 and calls out Keynotes 105113.A1 which describes these lockers as 12x15 (2-tier) however elevation 19/A7.16 refer to datil 14/A10.01 which calls these lockers as 12.x12.x12 (tow-tier) but should be 36"hgih (two-tier) instead. please coordinate & correct the Floor plan, keynotes, elevation and details to match clarifying what should be provided.	9/27/18	LOCKERS ARE TO BE DEBOURGH, SECTION 114000 PAR. 3.5, ITEM #1.02 NOTES LOCKERS AS NIFSEC, WHICH IS AN ABBREVIATION FOR NOT IN FOOD SERVICE CONTRACT. PLEASE USE DETAIL 14/A10.01 AS THE LOCKER DESIGN INTENT, ALTHOUGH LOCKER DIMENSIONS ARE TO BE 12W X 12D X 36H.	10/15/2018	
138	MCC127	6	Increment 2	Architectural	A7.14		Increment #2 - Signage shown in elevations 28/A7.14 (grab-n-go) refers to keynote 101400.A1 which depicts you to the signage plans for detail 1/A7.15 (cashier) & 2/A7.15 (buy back, pick0up, refunds) at the campus store which do not have a keynote call out, all appear to be 10-inch high Aluminum Metal letters. Confirm if these signs are 10-inch aluminum letter as scaled, and if these are to be included in the bid. if these are to be provided please indicate if details 11 or 22/G3.11 apply, or provide an alternate mounting detail	9/27/18	Signage at 28/A7.14 (Grab-N-Go), 1/A7.15(Cashiers) & 2/A7.15 (Buy Back, Pick-Up, Refunds) Letter height is 10-inch Aluminum Letters. Please use detail 22/G3.11 similar installation.	10/15/2018	
139	MCC98	6	Increment 2	Architectural	A9.31	15	Increment #2 - Detail 15/A9.31, Please provide a top of curb detail to clarify the extent of the 22ga galvanized counter flashing at the top of the curb	9/25/18	REFER TO CLARIFICATION ON DETAIL 15/A9.31 FOR VERTICAL DIMENSIONS.	10/15/2018	
140	MCC142	6	Increment 2	Low Voltage	271000		Please see attached substitution request: Subcontractor request to use Panduit or Superior Essex/Ortronics as an equal to Belden that is listed on Spec Section 271000 page 8 under section 2.5 Horizontal Cabling. Please review and advise if acceptable	10/2/18	The alternate solutions provided are not acceptable as an alternate. The System Performance of all components with either Panduit or Superior Essex do not meet same criteria as specified with the Belden solution. In addition, the flexibility or future maintenance savings of the connector specified, can't be met with the Panduit or Ortronics alternates provided.	10/15/2018	

MASTER PBC Log

PROJECT: Rancho Santiago Community College District
Santa Ana College - Johnson Student Center Building Demolition, Increment 1 and 2
DSA #04-116810-1
DSA #04-116810-2

PBC #	GC	Addendum	Package(s)	TRADE/CATEGORY	SHEET / SECTION	DETAIL / PAGE	QUESTION / COMMENT	ISSUED TO DESIGN TEAM	RESPONSE TO COMMENT	Addendum Date	Consultant
141	MCC87	6	Increment 2	Architectural	A6.01		Increment #2 - Details on Sheet A6.01 call for a "steel ship ladder" at the roof access hatch. The keynote is 055134.A2 refers you to the aluminum ladder specification. This specification is for aluminum ladders yet the drawings call for a steel ladder. The specified ship ladder in the specification (2.4A) call for the "Model 522" by O'Keeffe's inc or equal" which is not a telescoping ladder. Please clarify what is required and provide the correct specification for this ladder	9/24/18	OMIT KEYNOTE ON A6.01 REFERENCING 055134.A2. THIS INTERIOR SHIPS LADDER AT THE ROOF ACCESS SHALL BE PROVIDED PER SHEET A6.01 OR AN EQUAL TO ALACO SHIPS LADDER (65deg) SPECIFICATION ATTACHED. DO NOT USE SPECIFICATION SECTION 055134 FOR THIS LOCATION. KEYNOTE TO READ "STEEL SHIPS LADDER". PROVIDE A LADDER EXTENSION SAFETY POST BY MFR., MOUNTED ON THE INTERIOR OF THE RAILING OF SHIPS LADDER.	10/15/2018	
142	MCC135	6	Increment 2	Architectural	A8.20		Increment #2 - Per Sheet A8.20, Rooms J200-1 thru J200-3 have a comment calling for Vandal Resistant Corner Guards, however these are not identified on Detail 1/A2.21 nor Detail 1/A7.52. confirm if any Corner Guards per Section 102600 par. 2.20A are required, and if so provide the locations along with call outs & installation details.	10/2/18	See attached plan with locations boxed in red.	10/15/2018	
142.1	MCC135	8	Increment 2	Architectural			Increment #2 - Per Sheet A8.20, Rooms J200-1 thru J200-3 have a comment calling for Vandal Resistant Corner Guards, however these are not identified on Detail 1/A2.21 nor Detail 1/A7.52. confirm if any Corner Guards per Section 102600 par. 2.20A are required, and if so provide the locations along with call outs & installation details.			10/22/2018	
143	MCC153	6	Increment 2	Architectural	A8.30, A8.31		Increment #2 - Door schedules found on A8.30 and A8.31 calls for a stained finish on many of the interior doors. Specification section 09 90 00 does not have a specification for interior staining. Please provide a specification for staining of the wood doors.	10/5/18	The staining of the doors should be done at the (factory instead of field). Staining is specified in Section 081400 Flush Wood Doors.	10/15/2018	
144	MCC164	6	Increment 2	Architectural	101300		Increment #2 - Specification section 101300, please confirm the location of the non-illuminated directories, as none have been found.	10/8/18	THERE ARE NO NON-ILLUMINATED DIRECTORIES ON THIS PROJECT. REMOVED THIS SPECIFICATION FROM THE PROJECT.	10/15/2018	
145	MCC131	6	Increment 2	Architectural	A7.25		Increment #2 - Sheet A7.25, detail 8 Private Tutoring Rooms J209-2, J209-3, J209-4 all call for a "WB" on a side wall, however those walls are not shown in a n elevation detail. Note that "WB" does not appear as a description on the "Floor Plan - Legend" however we believe these are probably White Boards. Please confirm if these are whiteboards and if they are to be included. if so provide the size, type and elevations since either sections 101116 or 274116 could apply depending on which product is indicted. note that section 274116 Exhibit B does not list these Private Tutoring rooms, thus these are likely to be typical section 101116 Markerboards. please review and confirm if the bidders are to include any more floor plan call outs for "wb" but which are not shown on a interior wall elevations.	9/27/18	WB stands for White Boards and are to be included in bid. Please find attached Private Tutoring Rooms Typical elevation for location of marker boards and sizes for J209-2, J209-3, and J209-4. Note: All other WB are shown in elevations and keynoted but if not they can either be 5'W x3'H or 8'Wx4'H.	10/15/2018	
146	MCC132	6	Increment 2	Architectural	A7.26		Increment #2 - Sheet A7.26, detail 9, at the lower-left corner of Room J211 Resource Center is a a callout for Keynote 101116.A3 and "WB", however Elevation 8/A7.27 calls out Keynote 274116.B1. Since these are 2 different products, confirm which keynote superseded the other	9/27/18	Please use 101116.A3 for the White Board in the Resource Center (J211).	10/15/2018	
147	MCC139	6	Increment 2	Architectural	A3.20, A3.21		Increment #2 - Sheets A3.20 & A3.21, At grid lines J & 8, the acoustical ceiling type is not listed, please confirm that this area of about 360 SF is ACT-4	10/2/18	The area is about 367 SF of ACT-4.	10/15/2018	
148	MCC140	6	Increment 2	Architectural	A7.24		Increment #2 - Sheet A7.24, Details 7, 8 & 23 - these 3 details callout keynote 095113.A1 but then point at the wall. Please confirm that these Keynotes should be 092900.A1 instead to match the wall finish callouts on A8.20. Same issue applies in details 19/A7.23 & 27/A7.27. Please confirm these as well	10/2/18	Please use keynote 092900.A1 in lieu of keynote 095113.A1 on details 7,8, & 23 Sheet A7.24 and details 19/A7.23 & 27/A7.27.	10/15/2018	
149	MCC143	6	Increment 2	Architectural	A7.19		Increment #3 - Sheet A7.19, Detail 24, The wall Keynote 101123.A1 is pointing at the wall above the Keynote 101123.A3 Acoustic Board. Please confirm that this should be Keynote 092900.A1 instead.	10/3/18	Please note keynote 101123.A1 is the correct keynote. The wall is to have an acoustical tack board along the entire west wall. Please refer to diagram for acoustical tack board area hatching as reference.	10/15/2018	
150	MCC144	6	Increment 2	Architectural	A7.25		Increment #2 - Sheet A7.25, Detail 21, Please confirm if there are one or two Keynote 101123.A3 Acoustic Tack Boars at this elevation, since the left 9'-6" is not called out and the wall is separated from the middle 13'-11" board. Please also clarify the limits of the tack board on the north and south walls of the workroom (i.e. does the tack board wrap around these walls)? Note that the Clock is shown at 7'-6", however please review and advise if it should be installed higher to be above the tackboard?	10/3/18	Please see diagram below showing the Acoustical Tack Board Area elevation. The tack board does not wrap around the walls. Please install clock higher to avoid the tack board.	10/15/2018	
151	MCC141	6	Increment 2	Architectural	A7.55		Increment #2 - Sheet A7.55, Detail 1, Wall Keynote 095113.A3 & Sheet A7.54, Detail 7 - Wall keynote 095113.A2 both describe an Armstrong Wood Wall System. (see RFC for questions)	10/2/18	1) Confirm that detail 21/A9.52 should be used in lieu of Detail call out 2/A9.52 on sheet details 1/A7.55 and 7/A7.54. 2)Detail 3/A9.80 should read Armstrong Woodworks Grille. 3) Detail 11/A9.80 should read Armstong Woodworks Grille. WD-1 is Armstrong Woodworks Grille (only in lobby spaces on first and second floor) WD-2 is not used	10/15/2018	
152	MCC116	6	Increment 2	Architectural	A7.15	4	Increment #2 - Sheet A7.15 detail 4 - Reference detail 12/A9.91 is called out for the floor to shelving connection, however that detail is for Tall Wood Cabinets and should be Detail 15 & 25/A9.90 instead. Please review and confirm	9/26/18	Confirm details 15 &25/A9.90 should be used in lieu of 12/A9.91.	10/15/2018	
153	MCC117	6	Increment 2	Architectural	A7.17	9	Increment #2 - Sheet A7.17, Detail 9 - Near Gridlines M & 8 are 3 metal storage shelves called out per keynote 105613.A6 which is described as 24x48, however 2 of these are identified as 18x48 and one is 18x42, also elevation 6/A7.18 calls out these same shelves per Keynote 105613.A6. Confirm that either keynote 105613.A6 description should be revised to Keynote 105613.A7 for the two 18x48 shelves, and add a new Keynote for the 18x42 shelve and correct details 9/A7.17 and 6/A7.18 to match.	9/26/18	Confirm shelves on sheet 9/A7.17 & 6/A7.18 need to be updated to 18"x48" shelves and the one shelve at 18"x42" are the correct shelve sizes.	10/15/2018	
154	MCC118	6	Increment 2	Architectural	A7.17	9	Increment #3 - Sheet A7.17 detail 9 - Near Grids N & 9 are 7 Metal storage shelves called out per Keynote 105613.A5 which is described as 24x36, however these are drawn as 18x36, and elevations 10, 20/A7.18 calls out these same shelves per keynote 105613.A1 which calls for 18x36. Confirm that these 7 shelves should be keynote 105613.A1 on A7.17 instead.	9/26/18	Confirm Metal shelves along Grid N &9 on detail 9/A7.17 are to be 18"x36".	10/15/2018	
155	MCC145	6	Increment 2	Architectural	A10.01		Increment #2 - Sheet A10.01, Detail 3, in the lower right corner of the detail, Room J117-1A Store Offices calls for 12x15x36 two tier, however detail 6/A7.15 calls these lockers per Keynote 105113.A2 described as 12x15x12 6-tier instead and detail 15/A10.01 shows 6-tier as well. Please confirm that detail 3/A10.01 is incorrect and 6-tier lockers are to be provided. this same corner of the detail indicated Room J118-1 Prep Area calls for 15" D, but at the top of the detail the locker is listed as 12" deep. Please confirm which is correct	10/3/18	Note should read: Room J117-1A Store Offices 12"Wx12"Dx12"H THREE TIER LOCKERS (STANDARD) Room J118-1 Prep Area 12"Wx 12"DX36"H TWO TIER LOCKERS W/ CONCRETE BASE	10/15/2018	
156	MCC152	6	Increment 2	Architectural	A7.14		Increment #2 - Sheet A7.14, detail 25 cut at the 125300.A2 Retail Furniture references Detail 12/A9.91. this detail is for a Tall Cabinet based upon wood mill-work instead of metal furniture per section 125300, thus it does not apply. Please confirm that the retail furniture on the CS-drawings superseded the A-drawings where there are conflicts. Note this same cut call out is found at Details 1 2, 4/A7.15.	10/5/18	Correct CS-Drawings superseded the detail 25/A7.14, and 1 & 2 &4/A7.15 calling for detail 12/A9.91.	10/15/2018	

MASTER PBC Log

PROJECT: Rancho Santiago Community College District
Santa Ana College - Johnson Student Center Building Demolition, Increment 1 and 2
DSA #04-116810-1
DSA #04-116810-2

PBC #	GC	Addendum	Package(s)	TRADE/CATEGORY	SHEET / SECTION	DETAIL / PAGE	QUESTION / COMMENT	ISSUED TO DESIGN TEAM	RESPONSE TO COMMENT	Addendum Date	Consultant
157	MCC161	6	Increment 2	Architectural	A3.20		Increment #2 - Sheet A3.20 shows RS-1 near GL E/4&5 however graphically it doesn't appear RS-1 is required here. Please review and confirm that there is no RS-1 located here.	10/5/18	The RS-1 note is referring to the soffit detail above the Conference Room (J219-1) door. The door leading to the exterior area is exposed structure.	10/15/2018	
158	MCC99	6	Increment 2	Architectural	A2.30		Increment #3 - Sheet A2.30 , just north of Gridlines "2" between Gridlines "C and "D" there appears to be a roof parapet at 32'-4 1/2", however 1/A5.02 takes you to 3/A5.11 which then takes you to 2/A9.32 and there are no details for this parapet. See attached for reference. Please review and advise	9/25/18	FOR THE CANOPY WITH ROOF PARAPET, SEE ATTACHED REVISED DETAIL 2/A9.32. FOR THE CANOPY WITHOUT PARAPET SEE ATTACHED REVISED DETAILS 5/A9.32. FOR ALL OTHER DETAILS AND SECTIONS SEE ENLARGED ROOF PLAN 15/A6.12. ATTACHED DETAILS, SECTIONS AND PLANS ARE REVISED OTHERWISE USE THE DSA APPROVED SET. DIMENSIONS PROVIDED ON ENLARGED ROF PLAN FOR MORE CLARIFICATION.	10/15/2018	
159	MCC133	6	Increment 2	Architectural	A9.73		Increment #2 - Sheet A9.73, General Elevator Characteristics, Elevator 1 note 4 & elevator 2 note 4 both call for the speed to be 150 FPM, however section 142100 par., 1.02-J calls for 200 FPM. Please confirm that the bidders are to base the bid upon 150 FPM>	9/27/18	BOTH ELEVATORS ARE TO BE 150 FPM. REVISE SPECIFICATION SECTION 142100 PAR., 1.02-J TO READ 150 FPM.	10/15/2018	
160	MCC126	6	Increment 2	Architectural	A7.13		Increment #2 - Sheet A7.13, detail 8, the Specimen refrigerator is listed as OFOI, however detail 18/A7.13 calls for this same refrigerator to be OFCI. Please confirm which is correct.	9/27/18	THE SPECIMEN REFRIGERATOR IS TO BE OWNER FURNISHED CONTRACTOR INSTALLED, OFCI. COORDINATION WITH THE DISTRICT DURING CONSTRUCTION FOR DELIVERABLES WILL BE REEQUIRED. INSTALLATION INSTRUCTIONS WILL BE PROVIDED WITH EQUIPMENT. WET/DRY UTILITIES FOR EQUIPMENT IS SHOWN WITHIN DSA APPROVED CONTRACT DOCUMENTS. REVISE REFERENCE AT 8/A7.13 TO READ O.F.C.I.	10/15/2018	
161	MCC146	6	Increment 2	Architectural	A10.01		Increment #2 - Sheet A10.01, Detail 3, At the bottom is a call out for "Manuf. Curb at Rooms J103-2 and J117-1", however Details 22, 23/A7.07 call for a concrete curb at J103-2. Please confirm that a manf. Curb is required for the J117-1 lockers at Detail 6/A7.15 and a concrete curb is required at J103-2.	10/3/18	CONCRETE CURBS ARE AT J103-2 AND PRE-MANUFACTURERD CURBS ARE AT J117-1. REVISE 3/A10.01 TO REMOVE J103-2 FROM THE REFERENCE. ADD J103-2 TO THE NOTE ABOVE TO RECEIVE A CONCRETE CURB.	10/15/2018	
162	MCC150	6	Increment 2	Architectural	A7.54	5	Increment #2 - Sheet A7.54, detail 5. Please provide details for the edges of the Glassboard that mounts on the freestanding wall as the Glassboard is mounted using cleats. Leaving a small gap that may need to be hidden. Also, the dimension of 7'-6" high shown is the detail is different than the keynote 101116.A2 description that calls for 7'-9", please confirm which is correct.	10/5/18	EDGING WILL HAVE NO TRIM, POLISH THE MATERIAL TO ASSURE THERE ARE NO SHARP EDGES. PAINT THE ENTIRE WALL BEHIND THE GLASSBOARD, COLOR P2. TOP OF WALL IS 7'-9" PER STRUCTURAL CONFIRMED, SET THE TOP OF THE GLASSBOARD FLUSH WITH THE TOP OF WALL, WHICH WILL ALLOW A +3" CLEAR FROM FINISHED FLOOR.	10/15/2018	
163	MCC149	6	Increment 2	Landscape	323118, L5.20		Addendum 4 (refer to RFC question)	10/5/18	DETAILS ON SHEET L5.20 AND L5.40 SUPERCEDE SPECS IN SIZING OF MATERIALS TO BE USED, REFER TO SPEC SECTION 323118 PAR 2, 2.5-A. CONFIRMED CUSTOM GATES ARE TO BE PAINTED. G01, G02 AND G03 ARE WITHIN STRUCTURE AND SHOULD BE INSTALLED PER DETAILS ON A9.42 AND A9.71. THESE ARE PAINTED.	10/15/2018	
164	MCC151	6	Increment 2	Food Service	CS6.05		Increment #2 - Sheet CS6.05,Fixture 13. The quantity listed for the iPadKiosks is listed as 2, however the details to the left appear to show 6. Please confirm what is required.	10/5/18	The quantity of 2 iPadKiosks is correct. The elevation is showing the locations of computer monitors.	10/15/2018	
165	MCC94	6	Increment 2	Architectural	A9.70		Increment #2 - Detail 4/A9.70 shows a 2" contrasting stripe on stair nosising for tope and bottom treads at landings. In this detail it appears that the strip adds thickness to the tread system, implying it is not simply paint (see attached markup). Specification section 05 50 00 1.5.B.2 provides more information on this stripping however no product or manufacture is specified. This section does note "A painted stripe shall be acceptable". Please clarify if this strip should either be applied paint or a prefabricated product. If a pre-fabricated stripe is desired please provide a specification.	9/24/18	SEE ATTACHED REVISED DETAIL 4/A9.70 PROVIDE STAIR TREAD CONTRASTING STRIPE " BASIS OF DESIGN" BOLD STEP ANCHOR SYSTEM CAST IN TO PRECAST CONC. STEEL PAN STAIR. 4" STRAIGHT EDGE. BY "SURE-FOOT" OR EQUIV., INSTALL PER MANUFACTURER SPECIFICATIONS (SEE ATTACHED CUTSHEETS) - OMIT SENTENCE "A PAINTED STRIPE SHALL BE ACCEPTABLE" FROM SPECIFICATION SECTION 05 50 00 1.5.B.2. - REFER TO SPEC SECTIONS 055100 1.6-B AND 2.6 FOR MORE INFORMATION.	10/15/2018	
166	MCC167	6	Increment 2	Architectural	DIRTT		Increment #2 - Clarification on DIRTT Door types: SEE RFC	10/10/18	a) J110-3A DIRRT DOOR - FRAME IS FF, REMOVE REMARKS/KEYNOTES A, C, E AND REPLACE WITH I. b) J208-1A & J208-2A DIRRT DOORS - FRAMES ARE AL/FF, REMOVE REMARKS/KEYNOTE A FROM J208-1A. REVISE HARDWARE SET TO 962 AT J208-1A. c) J209-2A, J309-3A, J209-4A DIRRT DOORS TO BE 3'-4". ADD I TO REMARKS/KEYNOTE. d) J211C DIRRT DOOR - FRAME IS AL/FF. REMOVE A FROM REMARKS/KEYNOTES.	10/15/2018	
167	MCC171	6	Increment 2	Fire Alarm	114000		Increment #2 - In specification 114000 and on sheet FA-201 items 2-01, 2-14 and 2-21 are noted as NIFSEC - Please confirm these items are NOT to be included and will be provided by the owner. In specification section 114000 and on sheet FA-202 items 5-01, 5-02, 5-03, 5-04, 5-06, 5-10 & 5-11 are noted as NIFSEC or NIC and by others - Please confirm these items are NOT to be included and will be provided by owner.	10/10/18	Items described as NIC or NIFSEC in the Foodservice Section 114000 are not to be provided by the Kitchen Equipment Contractor as noted in the documents.	10/15/2018	
168	MCC175	6	Increment 2	Landscape	L11.10		Increment #2 - Sheet L11.10, key S8 describes a bike locker by Ground Control Systems (GCS) model FBV1 with a mesh screen door, however per the GCS representative they do not provide this option with the FBV model anymore. Confirm that the bidders are to provide the FBV model without the "open door" option. Nothe that GCS does provide other models that do have the open door option such as the ABSC Lockers, or the VISI lockers. please clarify what should be provided.	10/11/18	Provide VISI lockers. Single Bike Color: Black	10/15/2018	
169	MCC166	7	Increment 2	Fire Sprinklers	211313		Increment #2 - Specification 211313-1.06-C states that 15 sprinklers in addition to what is shown on the drawings are to be provided within the base bid, and section 211313-1.11-B states that 25 sprinklers are to be provided. Please clarify which quantity is correct.	10/10/18	Provide the allowance for 25 additional fire sprinklers per section 211313-1.11-B.	10/22/2018	
170	MCC186	7	Increment 2	AV	274116		Increment #2 - Specification Section 274116. please confirm that flat panel displays are contractor furnished, contractor installed.	10/11/18	All flat panel displays are CFCI.	10/22/2018	
171	MCC190	7	Increment 2	Low Voltage	A2.22, LV1.22		Increment #2 - A2.22 shows the private tutoring rooms J209-2, J209-3 and J209-4 to have flat panel displays while LV1.22 does not show these panels. Please advise if these locations are to have the displays and provide the appropriate detials.	10/11/18	AV scope for Private Tutoring Rooms has been deleted.	10/22/2018	

MASTER PBC Log

PROJECT: Rancho Santiago Community College District
Santa Ana College - Johnson Student Center Building Demolition, Increment 1 and 2
DSA #04-116810-1
DSA #04-116810-2

PBC #	GC	Addendum	Package(s)	TRADE/CATEGORY	SHEET / SECTION	DETAIL / PAGE	QUESTION / COMMENT	ISSUED TO DESIGN TEAM	RESPONSE TO COMMENT	Addendum Date	Consultant
172	MCC168	7	Increment 2	Electrical/Low Voltage	E2.13, LV1.21, LV5.21, 274116		Increment #2 - E2.13 indicates the North Lobby J200-1 to have a "Flat Panel Display" (Keynot 22) near gridline C.1 & 3 while gridlines 5 & B.8 should be "Digital Signage" (Keynote 23). Spec section 274116-1.3D provides dimensions for informational displays and digital signage and provide two different dimensions while LV1.21 calls out these two displays with the same detail (5/LV5.21) indicating they are to be the same dimensions (which is different than the dimensions in the specs). Please clarify which type of signage and the dimensions of the displays should be provided at each location. At the 2 other "Flat Panel Display" (keynote 22) locations detail 3/LV5.21 is called out. Please confirm these 2 locations are informational display signage which is 55" per spec 2741161.3D.	10/10/18	All displays detailed with LV5.21/5 are portrait-oriented 43" Samsung PM43F w/ embedded digital signage player (or current equal); spec sheet attached. All displays detailed with LV5.21/3 are landscape-oriented 55" Samsung PM55F w/ embedded digital signage player (or current equal); spec sheet attached	10/22/2018	
173	DNG1	8	Increment 2	AV			The utelogy control system is indicated as OFOI. Will the owner be handling the programmng of this control system. See RFC for add'l questions	10/11/18	1. No. The Responsibility will be left up to the A/V Integrator. District will purchase the Utelogy Control Software but will require a pre-programming/GUI meeting with the Utelogy representative, A/V Integrator, Districts A/V Tech and 3QC. 3. Replace with StarTech RACKCONS17HD (cut sheet attached, as well as updated Exhibit B). 4. All Chief PAC Series backboxes shall be provided by the AVC and installed by the Electrical Contractor. 5. Menu board shall contain three (3) landscape-oriented displays. A fourth display shall be ceiling mounted in the NE corner of the Coffee/Juice Bar. 6. Separate digital signage player not needed. The embedded digital signage player in the 65" Samsung QN65F is the only digital signage in The Spot (J101).	10/22/2018	
174	MCC184	8	Increment 2	AV	271000		Increment #2 - Specification Section 271000 (See RFC for questions)	10/11/18	1. CONFIRMED 2. CONFIRMED. REFER TO SECTION 2.6.B.3 3. CONFIRMED. REFER TO 272000 SPECS. 4. REFER TO 272000 SPECS SECTION 3.5H STATES DISTRICT ITS WILL PERFORM ALL CABLE CROSS-CONNECT AND STATION PATCHING TASKS.	10/22/2018	
175	MCC185	8	Increment 2	AV	272000		Increment #2 - SpecificaitonSection 272000; please confirm that wireless access points are contractor furnished, contractor installed.	10/11/18	CONFIRMED	10/22/2018	
176	MCC187	8	Increment 2	AV	275313		lease confirm if a Primex repeater is requried to be installed, if so, please specify model number & size (wattage output).	10/11/18	THIS IS A DESIGN-BUILD SYSTEM. THE REQURIEMENTS FOR A TURN-KEY SYSTEM ARE IDENTIFID IN SECTION 275313. THE CONTRACTOR IS RESPONSIBLE FOR A COMPLETE DESIGN, INSTALLATION, AND OPERATIONG SYSTEM PER THE SPECIFIED REQUIREMENTS.	10/22/2018	
177	MCC188	8	Increment 2	AV	281300		Increment #2 - Specification Section 281300, Confirm the access control server is existing. Please provide specific upgrade requirements at the existing server, if applicable (firmware, software, licenses). Confirm that contractor is to provide 2500-keyfobs to the college for the access control system.	10/11/18	A) The access control server is existing. There are no upgrade requirements. B) Contractor shall provide 2000 programmed credentials to RSCCD. An additional 500 credentials (not programmed) shall be provided for RSCCD use.	10/22/2018	
178	MCC189	8	Increment 2	AV	282300		Increment #2 - Specification Section 282300, confirm if any storage upgrades are required at the existing DVR. If so, provide specific upgrades and model numbers.	10/11/18	CONTRACTOR IS RESPONSIBLE FOR PROVIDING ALL NECESSARY LICENSES FOR CAMERAS. ADDITIONAL STORAGE WILL BE PROVIDED BY THE OWNER	10/22/2018	
179	MCC34	8	Increment 2	Landscape/Architectural	323119		Increment #2 - Specification Section 323119 par., 2.4, 3.4-A, 3.4-E, 3.5-A, Please confirm that Fence Grounding is or is not required for this project. Please confirm if Bonding to Lightning-Protection System is or is not required, as well as the testing. Also Section 323118 par., 1.2-A (the first paragraph) since there are two par. 1.2-A shown) calls for Lightning-Protection System, please confirm if this is required or not. if required, please provide details & location(s) for grounding and protection system.	9/18/18	SPECIFICATION SECTION 323119 HAS BEEN REMOVED IN ITS ENTIRETY. GATES/FENCES HAVE NO MOTOR(S) REMOVE FROM SPECIFICATION 323118 PAR., 1.2-A.	10/22/2018	
180	MCC134	8	Building Demo	REFERENCE DRAWINGS			The 7 for Reference Only Drawings show the existing Site Signal Plans, however the bidders will need a drawing that shows all the existing Site Utilities that are near the Limit-of-Work perimeter to determine if those existing utilities need to be protected with Temporary Shoring due to possible mass excavation in order to remove the existing 40' piles. The drawings need to include utility sizes and invert elevations for all systems (water, sewer, storm, chilled supply, chilled return, gas, power, signal, and possibly irrigation layout). Or, the Design Team could provide a common bid document that shows the location & depth & design basis of the Temporary Shoring for the bidders to include equally as the basis-of-bid.	10/2/18	THIS IS A MEANS AND METHOD EFFORT AND WILL NEED TO BE ENGINEERED BY THE DEMOLITION CONTRACTOR. AS-BUILTS CAN AND WILL BE PROVIDED AS NECESSARY PRIOR TO COMMENCING WORK. REFER TO BUILDING DEMOLITION PACKAGE AND INCREMENT 1 FOR DEPTH OF REMOVAL AND DEMO OF EXISTING CAPS AND PILES. ALL WET/DRY UTILITIES WILL BE REMOVED ENTIRELY WITHIN THE BOUNDARY OF SAID PROJECT.	10/22/2018	
181	MCC121	8	Increment 2	Low Voltage	281300		Increment #2 - Per Specification section 281300-1.1 and 2.2, there is a discrepancy between who is to furnish the dual-credentialed key-fobs. Section 1.1 says they are to be provided by others while 2.2 states the contractor shall provide 2,500 credentials. please clarify who is to provide the dual credentialed key-fobs. if the contractor is to provide the key fobs, the information in section 281300 sect 2.2 is inadequate to procure these devices as there are many variations and costs vary greatly especially if they are dual credential as noted in section 1.1 above. please provide more information so that the correct products can be provided	9/26/18	CONTRACTOR SHALL PROVIDE THE KEY-FOB CREDENTIAL. KEY FOB (CREDENTIAL) TECHNOLOGY TO BE COORDINATED W/ RSCCD.	10/22/2018	
182	MCC120	8	Increment 1 & 2	Civil, Landscape	L2.20	3	Increment #2 - Sheet L2.20, Detail 3, at the bottom , the new curb & hardscape layout does not show the existing CMU Monument Sign nor the removable stainless steel bollards. Confirm which of these are to be demolished or salvaged, noting that these are not call out to be removed nor protected on any of the Demolition sheets on any of the three sets of drawings. Also, if a new CMU Monument Sign and/or Removable Stainless Steel Bollards are required but in a different location, provide the location (s), quantity and details for these. See attached photo.	9/26/18	REFER TO REVISED SHEETS C1.0-D (INCREMENT 1) AND C2.0-D (INCREMENT 2)WITHIN ADDENDUM NO. 6 DATED 10/15/18	10/15/2018	
183	MCC172	8	Increment 2	Architectural	A8.30, A8.31		Increment #2 - SheetA8.31 door schedule indicates that door J200-3C (type Z2) is a 60 min rated door. However type Z2 on sheet A8.30 calls it out as non-rated and details 4, 19 & 30 on A9.11 also indicate this door is non-rated. Please confirm that door J200-3C, type Z2 is a non-rated door	10/11/18	DOOR J200-3C IS RATED, STRIKE OUT THE LANGUAGE "NON" ON SHEET A8.300 AT DOOR TYPE Z2	10/22/2018	

MASTER PBC Log

PROJECT: Rancho Santiago Community College District
Santa Ana College - Johnson Student Center Building Demolition, Increment 1 and 2
DSA #04-116810-1
DSA #04-116810-2

PBC #	GC	Addendum	Package(s)	TRADE/CATEGORY	SHEET / SECTION	DETAIL / PAGE	QUESTION / COMMENT	ISSUED TO DESIGN TEAM	RESPONSE TO COMMENT	Addendum Date	Consultant
184	MCC176	8	Increment 2	Architectural	A9.11		Increment #2 - The pocket door at the Won Door (Z2) is called out to be 9'-6" (which will be made slightly smaller so it can open and close). As there are no elevations of this door, please provide the final height required for the Lumicor panel cladding (note the standard material comes in 8' and 10' high panels, which can be cut down). Please also clarify if this Lumicor is RS-1 or RS-2.	10/11/18	ELEVATION OF DOOR IS ON SHEET A8.30, THE DOOR HEIGHT IS 9'-6", REFER TO SHEET A9.11 FOR DETAILS OF WON-DOOR. PROVIDE RS-1. modifications of the Lumicor panel sizing may and will be required to fit.	10/22/2018	
185	MCC177	8	Increment 2	Architectural	RFI 172		Increment #2 - Reference MCC RFI172, If the Won pocket door is determined to be non-rated, please confirm that all other Lumicor resin panels aren not required to be rated	10/11/18	LUMICOR RESIN PANELS ARE NOT RATED	10/22/2018	
186	MCC178	8	Increment 2	Architectural	105613		Increment #2 - Spec section 105613-2.1B & 2.4A specifies Hannibal Pallet Rack plus, however paragraph 2.4A.9a & c mentions Penco products. Please confirm that Hannibal is correct and references to Penco should be removed	10/11/18	CONFIRMED BOTH SPEC 105613 PAR 2.4-A.9a & c ARE TO READ HANNIBAL	10/22/2018	
187	MCC179	8	Increment 2	Architectural	A9.73, S4.11		Increment #2 - Elevator #1 pit cannot be completely waterproofed per typical detail 25/A9.73 as this condition ties into a grade beam and footing per 8/S4.11. Please provide waterproofing details specific to elevator #1 pit.	10/11/18	WATERPROOFING TO BE ONLY AT THE WEST AND NORTH/SOUTH WEST PIT WALLS. NOT NECESSARY TO WATERPROOF THE GRADE BEAM.	10/22/2018	
188	MCC181	8	Increment 2	Architectural	A3.10, A8.21		Increment #2 - On sheet A3.10 there is a physical call out for roller shades on the north façade of the Spot J101 calling for window treatment (12413.A3 between A.3 and C) but the roller shade window treatment notes on sheet A8.21 specify that the North and East facing windows of the Spot J101 will not have roller shades. Please confirm window treatment locations for the Spot J101.	10/11/18	REMOVED THE REFERENCE OF WINDOW SHADES AT THE NORTH IN THE SPOT J101. NOTE ON A8.21 IS CORRECT	10/22/2018	
189	MCC182	8	Increment 2	Architectural	A8.30, A8.31		Increment #2 - On sheet A8.30 HM doors J108B, J128A, J128B, J130A, J132A & J133A and sheet A8.31 HM door J220B are called to have FF-PC (factory powder coat) finish. The manufacturer specified (steelcraft) does not offer powder coated due to oven temperatures. Should these openings match the rest of the project and be primed for finish paint by others.	10/11/18	YES - PRIME FOR FINISH PAINT BY OTHERS. REVISE REFERENCE TO FF (ONLY) AT SAID DOORS.	10/22/2018	
190	MCC201	8	Increment 1	SHORING	SHORING		Provide Temporary Shoring Design documents and/or criteria that is required at a minimum along the east side of the building site due to the proximity of the deepened excavation for the pile cap and pile removal since this is a DSA approved project.	10/11/18	THIS IS A MEANS AND METHOD EFFORT THE GC AND/OR SUB-CONTRACTOR WILL BE REQUIRED TO HIRE A STRUCTURAL ENGINEER TO DESIGN/ENGINEER SHORING FOR DEMO/REMOVAL OF DEEP CAPS/PILES.	10/22/2018	
191	MCC135	8	Increment 2	Architectural	RFC 142		Increment #2 - Per Sheet A8.20, Rooms J200-1 thru J200-3 have a comment calling for Vandal Resistant Corner Guards, however these are not identified on Detail 1/A2.21 nor Detail 1/A7.52. confirm if any Corner Guards per Section 102600 par. 2.20A are required, and if so provide the locations along with call outs & installation details.	10/15/18	See attached plans with locations boxed in red. Corner Guards height for the majority will be +7' aff., sitting above the base. refer to markups for locations of taller/smaller height corner guards. mechanically fasten the corner guards per attached.	10/22/2018	
192	MCC191	8	Increment 2	Low Voltage	230900		Increment #2 - Regarding specification 230900: See RFC for questions	10/11/18	1)No it does not need to be an expansion of the existing Skyspark module and can be another standalone Fault Detection Diagnostics module tailored for the Johnson Student Center. 2)Fault Detection Diagnostics and Analytics should be locally hosted.	10/22/2018	
193	MCC180	8	Increment 2	Electrical	E0.03		Increment #2 - E0.03 list fixture type L10 with a description "Recessed linear LED Fixture, length per plans)Sheet L11.10 – Furniture Plan: or Revised bike lock specification", with pendant mounting. The part number also calls for a round pendant fixture. Please confirm the L10 fixture is to be a pendant fixture per fixture schedule, part number and mounting description.	10/11/18	Light fixture shall be pendant mounted per part number and mounting description. Light fixture description updated. Refer to revised sheet E0.03 attached.	10/22/2018	
194	MCC183	8	Increment 2	Architectural	A8.50		Increment #2 - On sheet A8.50 interior window details 10, 18, 20 and 26 have no information or cut sections showing the framing system. Please clarify if these window frame systems are to be aluminum, knockdown, or frameless for coordination and pricing.	10/11/18	WINDOWS IN-10, IN-19, IN-20 AND IN-26: ALUMINUM, REFER TO 17, 18 AND 19/A9.20 W/ ONE-WAY VISION GLASS.	10/22/2018	
195	MCC192	8	Increment 2	Architectural	A6.10		Increment #2 - On detail 8 on A6.10 the norther edge of the stairs references keynotes 084113.A1 - the aluminum storefront system. Detail 10 on A6.11 shows metal mesh. Please clarify keynote 084133.A1 can be removed from detail 8/A6.10.	10/11/08	REMOVE REFERENCE/KEYNOTE 084133.A1. THIS IS TO BE MATERIAL AND INSTALLED PER 12 AND 22/A9.71.	10/22/2018	

MASTER PBC Log

PROJECT: Rancho Santiago Community College District
Santa Ana College - Johnson Student Center Building Demolition, Increment 1 and 2
DSA #04-116810-1
DSA #04-116810-2

PBC #	GC	Addendum	Package(s)	TRADE/CATEGORY	SHEET / SECTION	DETAIL / PAGE	QUESTION / COMMENT	ISSUED TO DESIGN TEAM	RESPONSE TO COMMENT	Addendum Date	Consultant
196	MCC193	8	Increment 2	Architectural	A9.23		Increment #2 - On details 1 and 3 on A9.23 please clarify the finish material, that overhangs from the face of wall, between the drywall and backer rod and finish sealant at the interior window (see attached)	10/11/18	GRAPHICAL ERROR, IGNORE DARKENED LINE.	10/22/2018	
197	MCC194		Increment 2	Curtainwall	CW2.01		Increment #2 - On detail C1 on CW2.01 a reference is made for Detail 1 on CW6.12 which does not exist. Please provide the correct details.	10/11/18	DETAIL REFERENCE TO READ 1/CW6.09	10/22/2018	
198	MCC198	8	Increment 2	Architectural	G2.10		Increment #2 - Sheet G2.10, signage legend 14 cannot be found on the floor plan. Per FA2.12 the FACP is located in room J111. please confirm that sign 14 should be located at this door.	10/11/18	CONFIRMED - PROVIDE SIGNAGE TYPE 14 ON EXTERIOR SIDE OF ROOM.	10/22/2018	
199	MCC199	8	Increment 2	Architectural	G3.12		Increment #2 - Per Add #3, Detail 19/G3.12 was added (24" wide monument). However if cannot be located on the plans (only a 16" wide monument can be found). Please Revie and confirm this detail does not apply to this project.	10/11/18	CONFIRMED REMOVE DETAIL 19/GB.12 (ADDENDUM #3).	10/22/2018	
200	MCC184.1	8	Increment 2	AV			REFER TO RFC	10/15/18	CONFIRMED. CONFIRMED REFER TO SEC 2.6.B.3	10/22/2018	
201	MCC185.1	8	Increment 2	AV			REFER TO RFC	10/15/18	1. CONFIRMED 2. CONFIRMED. 3. Refer to 272000 Specs Section 3.5H states District ITS will perform all cable cross-connect and station patching tasks.	10/22/2018	
202	MCC200	8	Increment 2	Architectural	PBC 12		Increment #2 - Reference PBC #12 (Add #3) The original RFI requested details for the tile so that it could be custom made, but details for how to install the tile were provided. Please provide details of the custom tile so that bidders can accurately price fabrication of this custom tile.	10/11/18	REFER TO ATTACHED DETAILS 1 AND 2/SKA-202.1 AND COLORS (MALIBU CERAMIC WORKS) FOR THE DISTRICT STANDARD TILES.	10/22/2018	
203	MCC119	8	Increment 2	Architectural	A9.80	14	Increment #2 - Sheet A9.80 detail 14, The Skyfold Wall C calls for a Steel Channel Support and shows a threaded rod connection from the steel beam above to the Skyfold Hanger Assembly below. Provide the size of the channel, rods & all connection pieces and the spacing of the rods as no details are provided on the structural plans.	9/26/18	REFER TO ATTACHED REVISED DETAILS 14 AND 19/A9.80 FOR ADDITIONAL DETAILING.	10/22/2018	
204	MCC169	8	Increment 2	Low Voltage	LV1.21, LV5.21		Increment #2 - LV1.21 calls out the "ceiling mount flat panel display" in the North Lobby J200-1 on 4/LV5.21 which indicates the Flat Panel Display to be 40", however spec section 274116 does not mention any displays of this size. Please clarify the correct dimensions or product information for this ceiling mounted flat panel display.	10/10/18	See Exhibit B (attached) - Major AV Equipment List (attached separately) Display is the 43" Samsung PM43F w/ embedded digital signage player (or current equal); spec sheet attached	10/22/2018	
205	MCC170	8	Increment 2	Low Voltage/Architectural	274116		Increment #2 - Spec 274116-1.3B discusses a "100" diagonal wall-mounted screen surface that shall double as a whiteboard", however there is no additional information provided in spec 274116 and the DIV 10 specs do not provide any product information for this white board. Please provide a specification for this whiteboard or indicate if it is to be OFOI	10/10/18	See Exhibit B - Major AV Equipment List (attached separately) 100" whiteboard screen is Da-Lite IDEA Screen (spec attached); it is CFCI	10/22/2018	
206	MCC195	8	Increment 2	Architectural	A2.11, A2.21		Increment #2 - Please see attached markup of first and second flor plans 9A2.11, A2.21) for conflicting locations of flat panel TV displays between Architectural and Low Voltage plans. Please clarify at these conflicting locations if a flat panel TV or display is desired and assign details from A9.80 for wall niches and recessed pockets accordingly.	10/11/18	LV1.11 - Digital signage display added outside The Spot to match enlargement 1/LV3.03. LV1.12 - Informational display added in hallway between Health & Wellness Center and D.S.P.S. Per A2.12 (attached), add callout for digital signage display outside Health & Wellness Center. Refer to attached A2.12, A7.54, LV1.11 and LV1.12	10/22/2018	
207	MCC196	8	Increment 2	Architectural	A9.80		Increment #2 - locations throughout first and second floor plans show flat panel display boards that appear to be surface mounted as opposed to recessed in wall (example attached for office room typical of J212-1-11). Please confirm that wall niche at flat panel display details 11, 12, 23/A9.80 do not relate to these surface mounted TVs on first and second floor plans. if recessed wall niche is desired at locations please add corresponding details to locations for coordination with drywall and framers.	10/11/18	CONFIRMED THESE FLAT PANEL DISPLAYS ARE SURFACE MOUNTED NO WALL NICHE. WALL NICHE'S ARE FOR FLAT PANEL DISPLAYS OVER 41"WIDE AND 4" DEEP INCLUDING MOUNT.	10/22/2018	
208	MCC186.1	8	Increment 2	AV				10/15/18	See Exhibit B - Major AV Equipment List (attached separately)	10/22/2018	
209	MCC197	8	Increment 2	Architectural	A9.80		Increment #2 - Recessed flat panel TVs throughout project do not contain cut sections showing wall niche details from A9.80. Where missing, please add details 11, 12 or 23 or A9.80 to floor plans to clarify for coordination with drywall and framers on where and how this conditions should occur. See markup for example of location on first floor plans.	10/11/18	WALL NICHE'S PER 11 AND 12/A9.80 OCCURS AT: DSPS J108, HEALTH & WELLNESS CENTER J110, LOUNGE J200-4, CONFERENCE ROOM J219-1, 219-2, 219-3, SPOT RECIPTION J101. WALL NICHE PER 23/A9.80 OCCURS AT: CAMPUS STORE J117.	10/22/2018	
210	MCC173	8	Increment 2	Architectural			Increment #2 - Sheet A8.21, RS1 is called out as lumiform Pepperdust Opaque, please confirm the product information received from the manufacturer is correct as follow: SEE RFC for add'l question	10/11/18	RS1 confirm. RS2 confirm material and 1/2" thickness, please see manufactures sheet attached. RS2.1 will be the Lumiform Silver Spun, Back Finish-Matte Dove Opaque. Flame polish is a method of polishing a material using heat, that is to be applied only at the edges. Not the surface of the material because RS1 & RS2 have a matte surface finish. Please see Lumiform location diagram attached.	10/22/2018	
211	MCC174	8	Increment 2	Architectural			Increment #2 - Please see attached clarification questions regarding RS-1 and RS-2 and where they each apply.	10/11/18	REFER TO ATTACHED RESPONSE	10/22/2018	